Form No. 3484-574 Rev A

TORO®

Count on it.

Operator's Manual

Multi Pro® 5800-G Turf Sprayer with ExcelaRate® Spray System

Model No. 41394—Serial No. 419000000 and Up

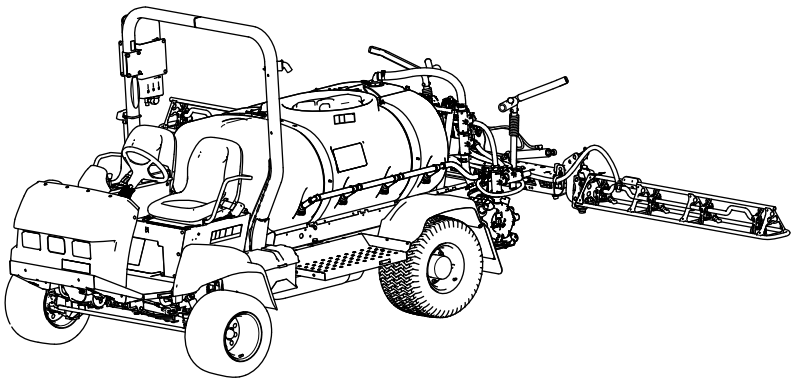

Register at www.Toro.com.
Original Instructions (EN)

CE UK CA

3484-574

This product complies with all relevant European directives; for details, please see the separate product specific Declaration of Conformity (DOC) sheet.

It is a violation of California Public Resource Code Section 4442 or 4443 to use or operate the engine on any forest-covered, brush-covered, or grass-covered land unless the engine is equipped with a spark arrester, as defined in Section 4442, maintained in effective working order or the engine is constructed, equipped, and maintained for the prevention of fire.

The enclosed *engine owner's manual* is supplied for information regarding the US Environmental Protection Agency (EPA) and the California Emission Control Regulation of emission systems, maintenance, and warranty. Replacements may be ordered through the engine manufacturer.

If this machine is equipped with a telematics device, refer to your authorized Toro distributor for instructions to activate the device.

⚠ WARNING

CALIFORNIA
Proposition 65 Warning

The engine exhaust from this product contains chemicals known to the State of California to cause cancer, birth defects, or other reproductive harm.

Battery posts, terminals, and related accessories contain lead and lead compounds, chemicals known to the State of California to cause cancer and reproductive harm. Wash hands after handling.

Use of this product may cause exposure to chemicals known to the State of California to cause cancer, birth defects, or other reproductive harm.

Introduction

This machine is a dedicated turf spray application vehicle and is intended to be used by professional, hired operators in commercial applications. It is designed primarily for spraying on well-maintained lawns in parks, golf courses, sports fields, and on commercial grounds.

This machine is designed primarily for off-road use and is not intended for extensive driving on public roads. Using this product for purposes other than its intended use could prove dangerous to you and bystanders.

Read this information carefully to learn how to operate and maintain your product properly and to avoid injury and product damage. You are responsible for operating the product properly and safely.

Visit www.Toro.com for more information, including safety tips, training materials, accessory information, help finding a dealer, or to register your product.

Whenever you need service, genuine Toro parts, or additional information, contact an Authorized Service Dealer or Toro Customer Service and have the model and serial numbers of your product ready. Figure 1 identifies the location of the model and serial numbers on the product. Write the numbers in the space provided.

Important: **With your mobile device, you can scan the QR code on the serial number decal (if equipped) to access warranty, parts, and other product information.**

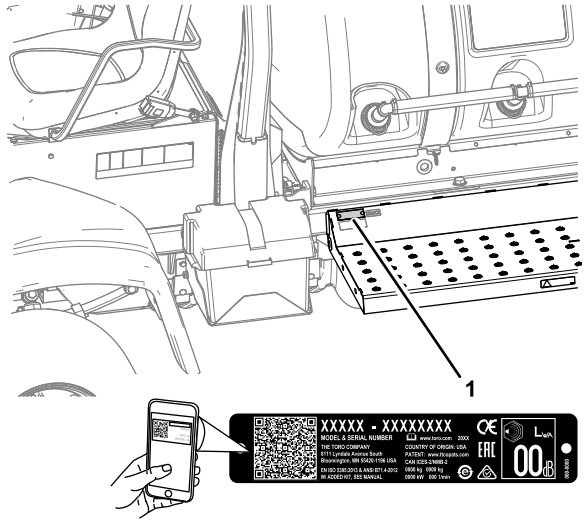

g238884

Figure 1

1. Model and serial number location

© 2026—The Toro® Company
8111 Lyndale Avenue South
Bloomington, MN 55420

Contact us at www.Toro.com.
Printed in the USA
All Rights Reserved

Model No. _____

Serial No. _____

This manual identifies potential hazards and has safety messages identified by the safety-alert symbol (Figure 2), which signals a hazard that may cause serious injury or death if you do not follow the recommended precautions.

g000502

Figure 2
Safety-alert symbol

This manual uses 2 words to highlight information. **Important** calls attention to special mechanical information and **Note** emphasizes general information worthy of special attention.

Contents

Safety 4
General Safety 4
Safety and Instructional Decals 5
Setup 12
1 Assembling the Sprayer Tank Fill Fitting 13
2 Installing the CE Kit 13
Product Overview 14
Controls 15
Sprayer Controls 17
Specifications 20
Attachments/Accessories 20
Before Operation 20
Before Operation Safety 20
Performing Pre-Starting Checks 21
Preparing the Machine 21
Breaking in a New Machine 22
Preparing the Sprayer 23
Filling the Tanks 26
Calibrating the Section-Bypass Valves 27
Agitation-Bypass Valve Knob Position 28
Calibrating the Agitation-Bypass Valve 28
Locating the Spray Pump 29
During Operation 29
During Operation Safety 29
Operating the Machine 31
Operating the Sprayer 32
Sprayer Functions for Application Rate Mode and Manual Mode 32
Spraying with the ExcelaRate Sprayer System 32
Positioning the Spray Sections 36
Taking Proper Turf Care Precautions while Operating in Stationary Modes 37
Spraying Tips 37
Unclogging a Nozzle 37
After Operation 37
After Operation Safety 37
Cleaning the Sprayer 38
Hauling the Machine 41
Towing the Sprayer 42
Maintenance 43
Maintenance Safety 43
Recommended Maintenance Schedule(s) 44
Daily Maintenance Checklist 46
Notation for Areas of Concern 46
Pre-Maintenance Procedures 47
Raising the Sprayer 47
Accessing the Engine 47
Lubrication 50
Greasing the Spray Pump 50
Greasing the Steering and Suspension 50
Greasing the Boom Hinges 50
Greasing the Actuator-Rod Bearings 51
Engine Maintenance 52
Engine Safety 52
Checking the Air Cleaner 52
Replacing the Air-Filter Element 53
Engine-Oil Specification 54
Checking the Engine Oil 54
Changing the Engine Oil Filter 54
Engine-Oil Quantity 55
Changing the Engine Oil 55
Checking the PCV Valve 56
Performing Yearly Engine Maintenance 56
Fuel System Maintenance 57
Checking the Fuel Line and Connections 57
Bleeding the Fuel System 57
Servicing the Fuel Pump 57
Draining the Fuel Tank 60
Electrical System Maintenance 61
Electrical System Safety 61
Replacing the Fuses 61
Servicing the Battery 61
Drive System Maintenance 63
Inspecting the Wheels/Tires 63
Planetary-Gear-Drive Lubricant Specification 63
Checking the Planetary-Gear-Drive Lubricant 63
Changing the Planetary-Gear-Drive Lubricant 64
Adjusting the Front Wheel Toe-In 65
Cooling System Maintenance 66
Cooling System Safety 66
Coolant Specification 66

Checking the Coolant Level 66
Coolant Quantity 67
Changing the Coolant 67
Brake Maintenance 68
Adjusting the Brakes 68
Belt Maintenance 69
Servicing the Alternator Belt 69
Hydraulic System Maintenance 70
Hydraulic System Safety 70
Hydraulic Fluid Specifications 70
Checking the Hydraulic Fluid 70
Replacing the Hydraulic Filters 71
Hydraulic-Fluid Quantity 72
Changing the Hydraulic Fluid 72
Sprayer System Maintenance 73
Inspecting the Hoses 73
Changing the Suction Filter 73
Changing the Pressure Filter 73
Changing the Nozzle Filter 74
Adjusting the Booms to Level 75
Inspecting the Nylon Pivot Bushings 75
Pump Maintenance 76
Inspecting the Pump 76
Cleaning 77
Cleaning the Radiator-Cooling Fins 77
Cleaning the Flow Meter 77
Storage 78
Storage Safety 78
Preparing the Machine for Storage 78
Preparing the Machine for Service 80
Troubleshooting 81
Schematics 84

Safety

General Safety

This product is capable of causing personal injury. Always follow all safety instructions to avoid serious personal injury.

- Read and understand the contents of this *Operator's Manual* before starting the engine.
- Use your full attention while operating the machine. Do not engage in any activity that causes distractions; otherwise, injury or property damage may occur.
- Use appropriate personal protective equipment (PPE) to guard against contact with chemicals. Chemical substances used in the sprayer system may be hazardous and toxic.
- Do not put your hands or feet near moving components of the machine.
- Do not operate the machine without all guards and other safety protective devices in place and working on the machine.
- Keep clear of any discharge area of the sprayer nozzles and spray drift. Keep bystanders and children out of the operating area.
- Never allow children to operate the machine.
- Park the machine on a level surface, engage the parking brake, shut off the engine, remove the key (if equipped), and wait for all movement to stop before you leave the operator's position. Allow the machine to cool before adjusting, servicing, cleaning, or storing it.

Improperly using or maintaining this machine can result in injury. To reduce the potential for injury, comply with these safety instructions and always pay attention to the safety-alert symbol ⚠, which means Caution, Warning, or Danger—personal safety instruction. Failure to comply with these instructions may result in personal injury or death.

Not all the attachments that adapt to this machine are covered in this manual. Refer to the operator's manual provided with each attachment for additional safety instructions.

Safety and Instructional Decals

Safety decals and instructions are easily visible to the operator and are located near any area of potential danger. Replace any decal that is damaged or missing.

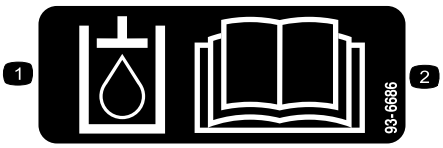

decal93-6686

93-6686

1. Hydraulic fluid
2. Read the *Operator's Manual*.

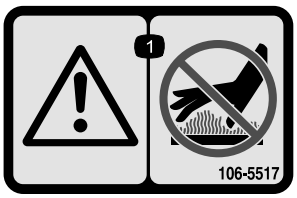

decal106-5517

106-5517

1. Warning—do not touch the hot surface.

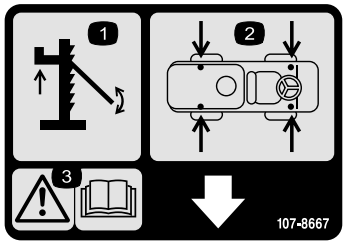

decal107-8667

107-8667

1. Jacking
2. Jack-point locations
3. Warning—Read the *Operator's Manual* for more information on jacking the vehicle.

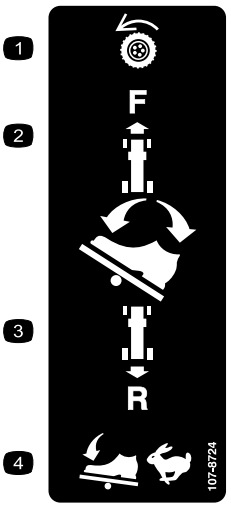

decal107-8724

107-8724

1. Traction drive
2. To drive forward, press the top of the traction pedal forward and down.
3. To drive in reverse, press the bottom of the pedal rearward and down.
4. Vehicle speed increases with more pedal pressure.

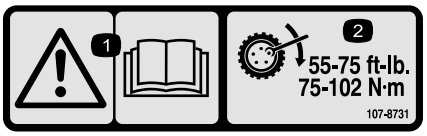

decal107-8731

107-8731

1. Warning—read the *Operator's Manual.*
2. Torque the lug nuts to 75 to 102 N·m (55 to 75 ft-lb).

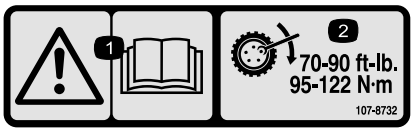

decal107-8732

107-8732

1. Warning—read the *Operator's Manual.*
2. Torque the lug nuts to 95 to 122 N·m (75 to 90 ft-lb).

decal117-3276

117-3276

1. Engine coolant under pressure
2. Explosion hazard—read the *Operator's Manual*.
3. Warning—do not touch the hot surface.
4. Warning—read the *Operator's Manual*.

decal117-4955

117-4955

1. Warning—read the *Operator's Manual*; wear the seat belt when seated in the operator's position; avoid tipping the machine.
2. Warning—wear hearing protection.

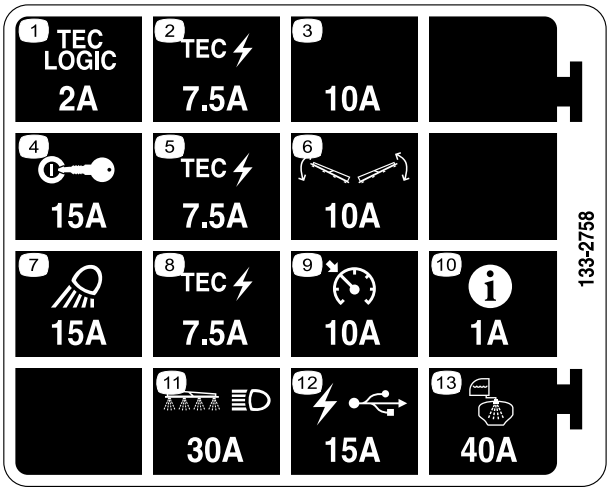

decal133-2758

133-2758

1. TEC logic—2 A
2. TEC power—7.5 A
3. Extra fuse slot—10 A
4. Ignition—15 A
5. TEC power—7.5 A
6. Boom control—10 A
7. Work light—15 A
8. TEC power—7.5 A
9. Cruise control—10 A
10. InfoCenter—1 A
11. Boom and headlight—30 A
12. USB power—15 A
13. Tank spray—40 A

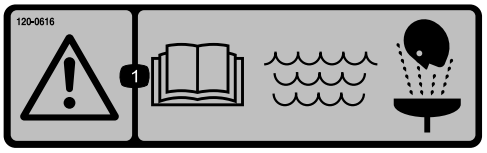

decal120-0616

120–0616

1. Warning—read the *Operator's Manual*; use fresh, clean water for first-aid washing.

decal120-0622

120-0622

1. Warning—read the *Operator's Manual*.
2. Warning—do not enter the tank.
3. Caustic liquid/chemical burn and toxic gas inhalation hazards—wear hand, skin, eye, and respiratory protection.

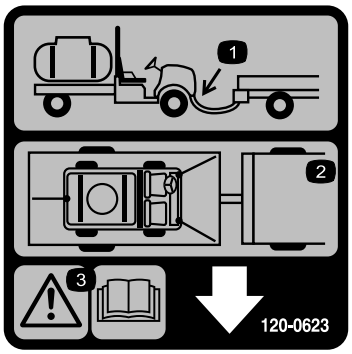

decal120-0623

120-0623

1. Tow hitch location
2. Tie down locations
3. Warning—Read the *Operator's Manual.*

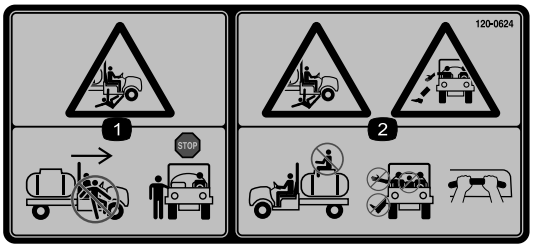

decal120-0624

120-0624

1. Crushing/dismemberment hazard of bystanders—do not enter or exit the machine while it is moving; stop the machine before entering or exiting.
2. Falling, crushing hazard—no riders on tank; keep arms and legs inside of the vehicle at all times, use passenger hand holds.

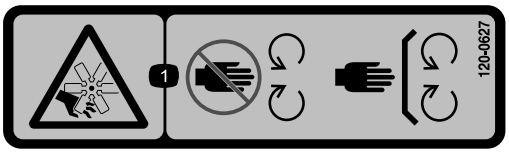

decal120-0627

120-0627

1. Cutting/dismemberment hazard, fan—stay away from moving parts; keep all guards and shields in place.

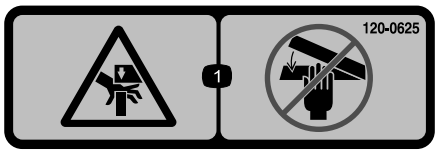

decal120-0625

120-0625

1. Pinch point, hand—keep hands away.

---

decal120-0617

120-0617

1. Pinch point—keep hands away from the hinge.
2. Crushing hazard, boom—keep bystanders away.

---

decal127-6976

127-6976

1. Decrease
2. Increase

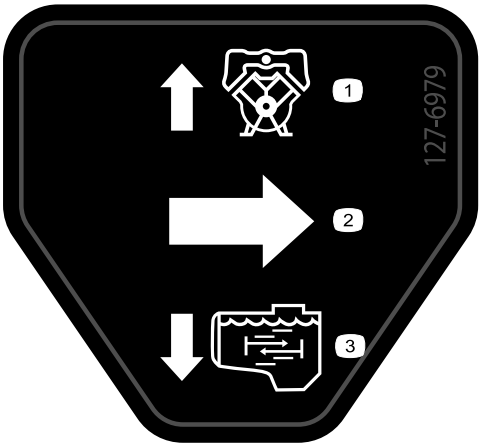

decal127-6979

127-6979

1. Pump-return flow
2. Flow
3. Agitation flow

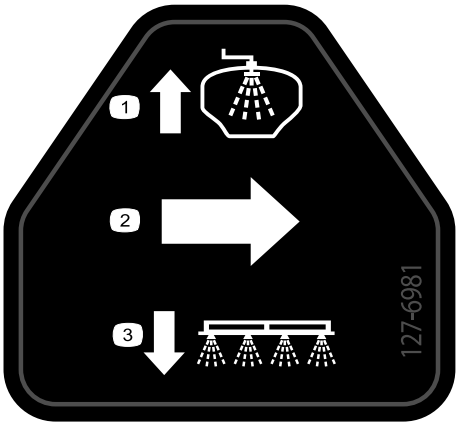

decal127-6981

127-6981

1. Bypass-return flow
2. Flow
3. Section spray

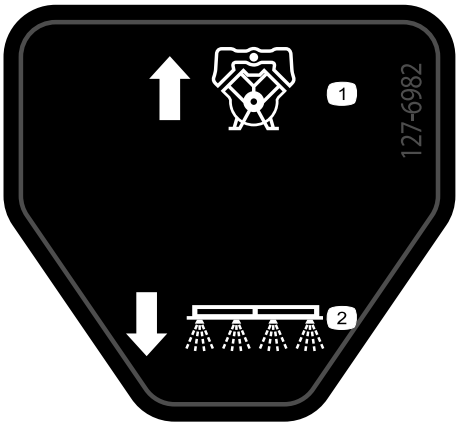

decal127-6982

127-6982

1. Pump-return flow
2. Section spray

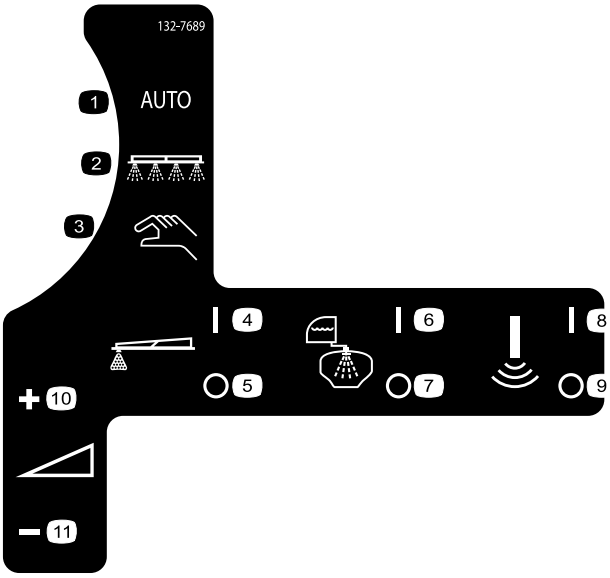

decal132-7689

132-7689

1. Auto spray mode
2. Spray mode
3. Manual spray mode
4. Foam marker—on
5. Foam marker—off
6. Rinse system—on
7. Rinse system—off
8. Sonic sensor—on
9. Sonic sensor—off
10. Application rate—increase
11. Application rate—decrease

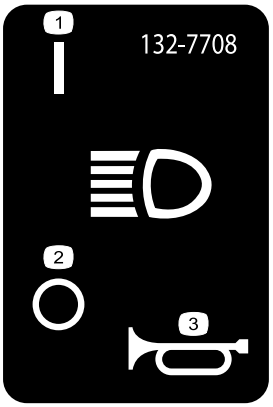

decal132-7708

132-7708

1. Headlight—on
2. Headlight—off
3. Horn

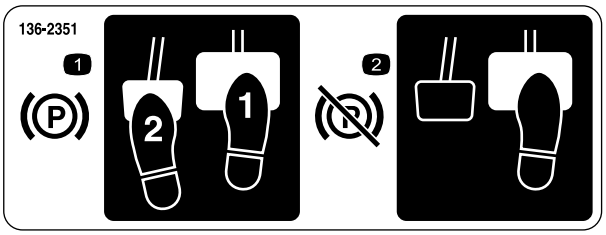

decal136-2351

136-2351

1. To engage the parking brake, press down the brake and parking-brake pedal.
2. To disengage the parking brake, press and release the brake pedal.

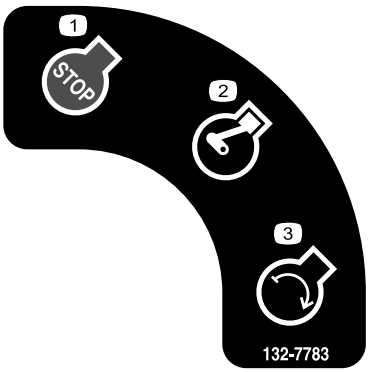

decal132-7783

132-7783

1. Engine stop
2. Engine run
3. Engine start

decal133-8062

133-8062

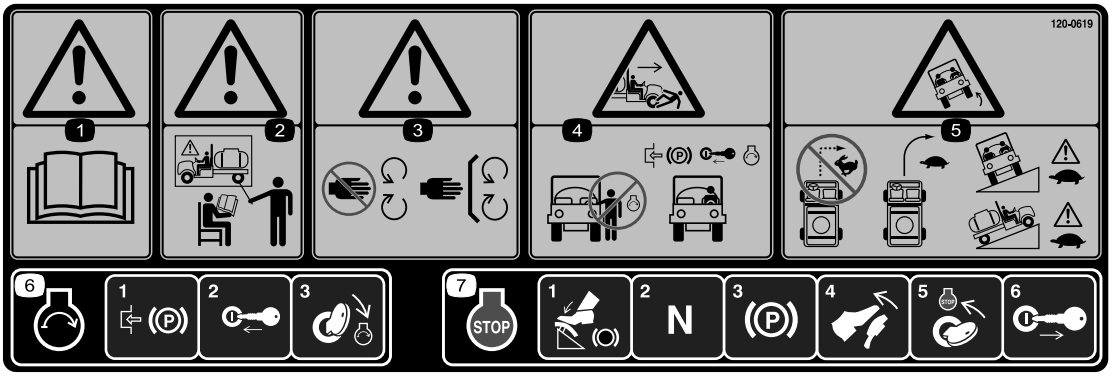

decal120-0619

120-0619

1. Warning—read the *Operator's Manual*.
2. Warning—do not operate this machine unless you are trained.
3. Warning—stay away from moving parts, keep all guards and shields in place.
4. Crushing/dismemberment hazard of bystanders—do not start the engine while entering or exiting the vehicle; engage the parking brake, insert the key, and start the engine while seated in the operator's seat.
5. Tipping hazard—do not turn sharply while traveling fast, drive slowly when turning; use caution and drive slowly when traveling across or up and down slopes.
6. To start the engine, engage the parking brake, insert the ignition key and turn it to the START position.
7. To shut off the engine, press the brake, ensure that the traction pedal is in the NEUTRAL position, engage the parking brake, release the brake, turn the key to the STOP position, and remove the key.

decal132-7786

132-7786

1. Spray—off
2. Spray—on
3. USB

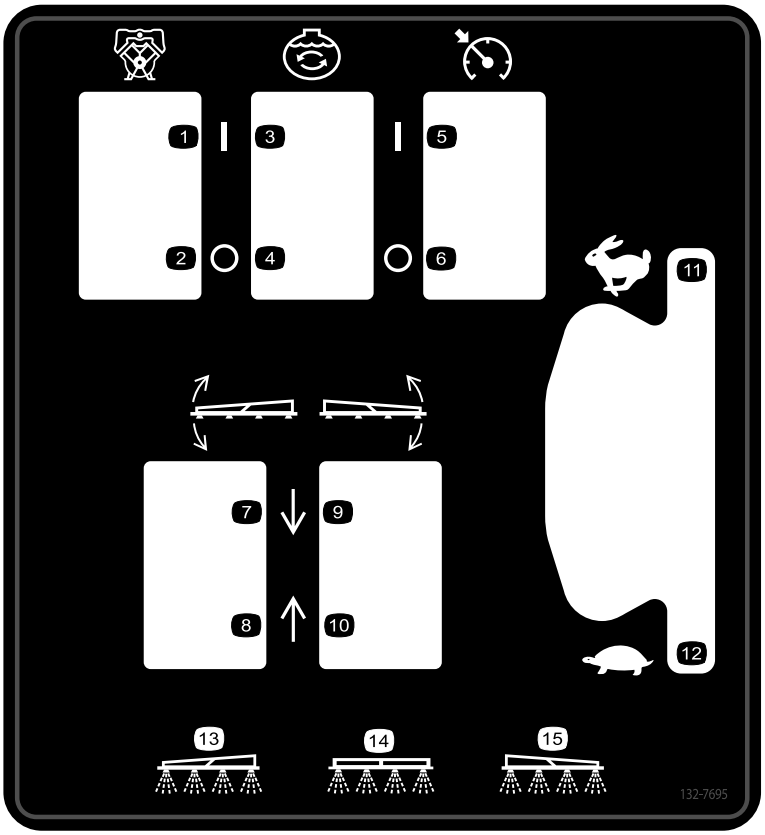

decal132-7695

132-7695

1. Pump—on
2. Pump—off
3. Agitation—on
4. Agitation—off
5. Speed control—on
6. Speed control—off
7. Lower the left section.
8. Raise the left section.
9. Lower the right section.
10. Raise the right section.
11. Engine speed—fast
12. Engine speed—slow
13. Left section spray
14. Center section spray
15. Right section spray

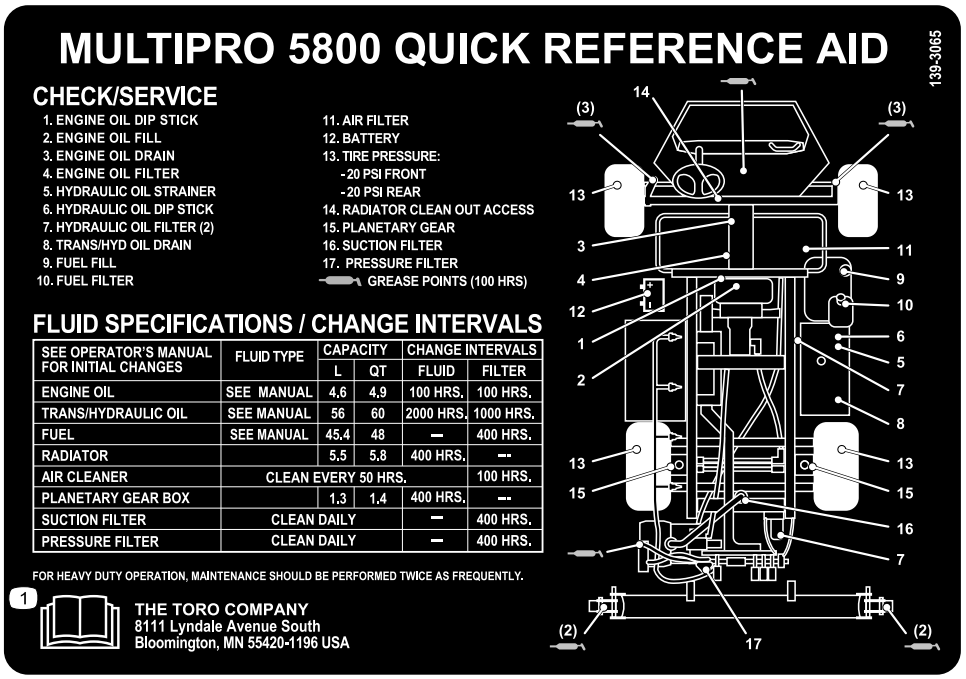

decal139-3065

139-3065

1. Read the *Operator's Manual*.

Setup

Loose Parts

Use the chart below to verify that all parts have been shipped.

Procedure	Description	Qty.	Use
1	Quick-disconnect fitting	1	Assemble the sprayer tank fill fitting.
2	No parts required	–	Install the CE kit.

Media and Additional Parts

Description	Qty.	Use
Starter key	2	Read the manuals before operating the machine.
Operator's Manual	1	
Engine owner's manual	1	
Parts Catalog Instruction Card	1	
Screen filter	2	

Note: Determine the left and right sides of the machine from the normal operating position.

Note: If you have questions or need additional information regarding the spray control system, refer to the *Operator's Manual* supplied with the system.

Important: **This sprayer is sold without spray nozzles.**

To use the sprayer, *you must obtain and install the nozzles*. Contact your authorized Toro distributor for information on the available section kit and accessories.

After you install your nozzles and before using the sprayer for the first time, adjust the section bypass valves so that the pressure and application rate remains the same for all sections when you turn 1 or more sections off. Refer to Adjusting the Section Bypass Valves (page 27).

1

Assembling the Sprayer Tank Fill Fitting

Parts needed for this procedure:

1	Quick-disconnect fitting

Procedure

Note: To complete this procedure, you will need to supply a hose with 1 inch male national pipe thread (NPT) fitting and PTFE thread sealant.

1. At the forward, right side of the tank cover, remove the 2 hairpins that secure the latches for the quick-disconnect coupling for the anti-siphon fill receptacle (Figure 3).

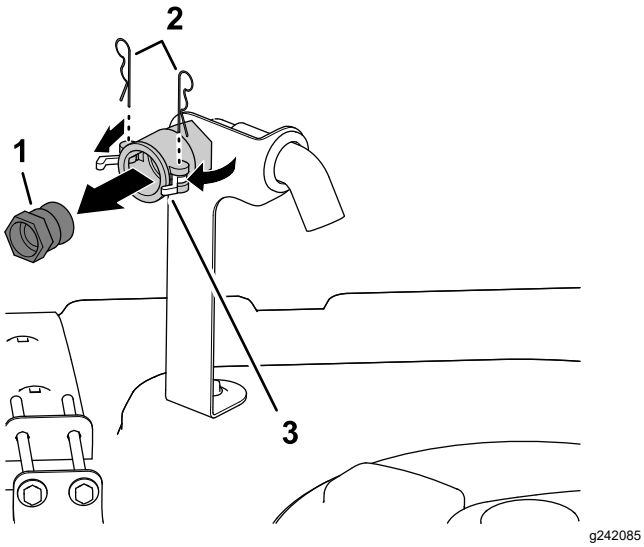

Figure 3

1. Quick-disconnect fitting
2. Hairpins
3. Latches (quick-disconnect coupling)

2. Rotate the latches open to unlock the quick-disconnect fitting from the quick-disconnect coupling (Figure 3).
3. Remove the quick-disconnect fitting from the quick-disconnect coupling (Figure 3).
4. Close the latches and install the hair pins into the flanges of the quick-disconnect coupling (Figure 3).
5. Apply PTFE thread sealant (Figure 4) to the threads of the fill hose fitting (1 inch—national pipe thread).

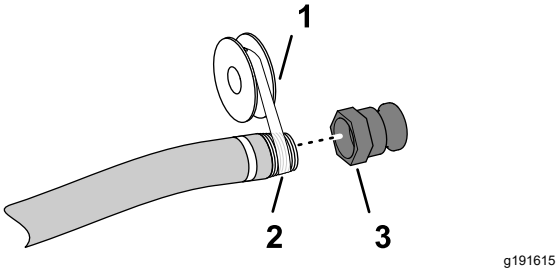

Figure 4

1. PTFE thread sealant
2. Fill hose fitting (1 inch—national pipe thread)
3. Quick-disconnect fitting

6. Thread the quick-disconnect coupling onto the fill hose and tighten it by hand (Figure 4).

2

Installing the CE Kit

Machines Operated in EU Countries

No Parts Required

Procedure

Install the CE kit for your machine; refer to the Multi Pro 5800 CE Kit *Installation Instructions*.

Product Overview

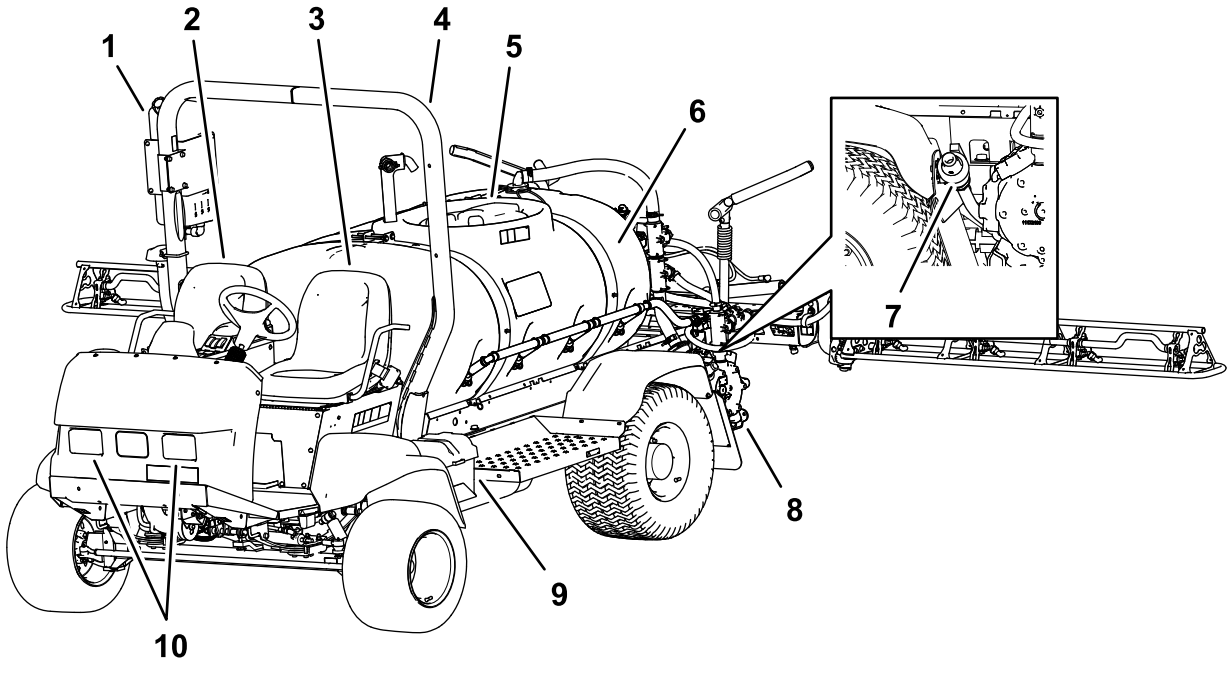

Figure 5

1. Fresh-water tank
2. Passenger seat
3. Operator's seat
4. Roll bar (ROPS)
5. Tank lid
6. Chemical tank
7. Drain valve (sprayer tank)
8. Spray pump
9. Battery
10. Work lights

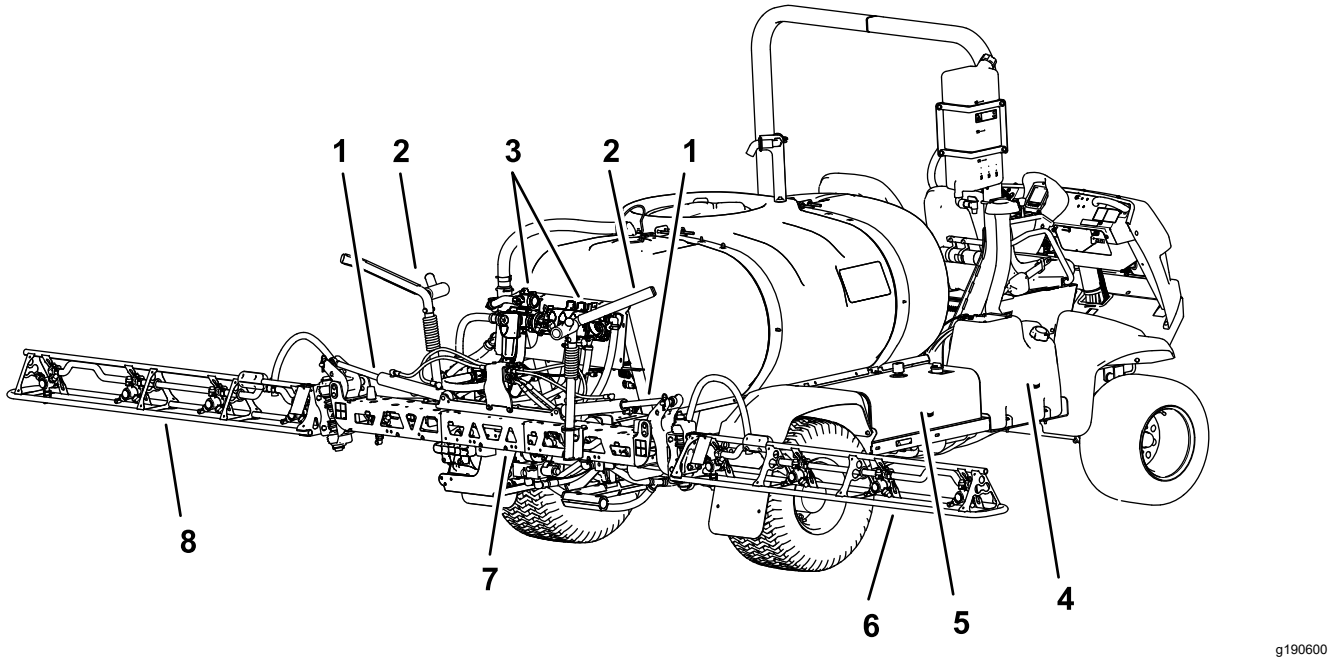

Figure 6

1. Lift cylinder
2. Boom-transport cradle
3. Valve manifolds
4. Fuel tank
5. Hydraulic tank
6. Right boom section
7. Center boom section
8. Left boom section

Controls

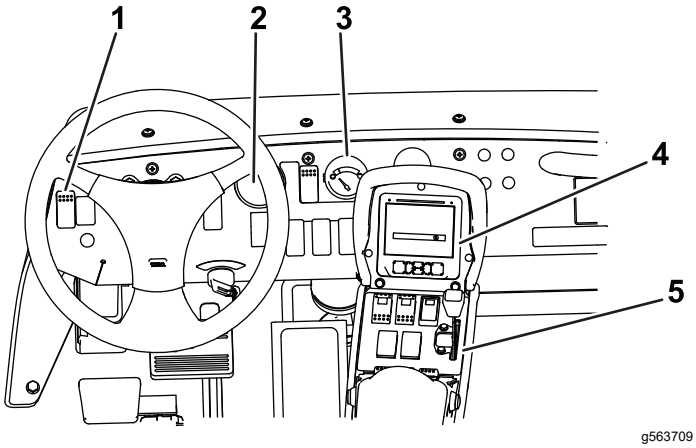

Figure 7

1. Work-light switch
2. Pressure gauge
3. Fuel gauge
4. Display
5. Quick Find™ console

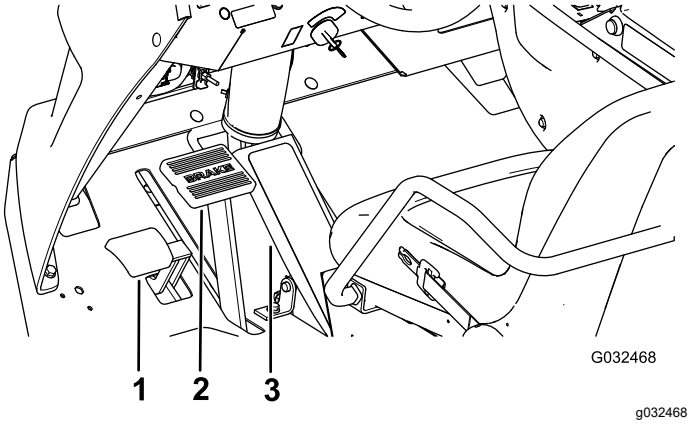

Figure 8

1. Parking-brake pedal
2. Brake pedal
3. Traction pedal

Vehicle Controls

Traction Pedal

The traction pedal (Figure 8) controls the movement of the machine, both forward and reverse. Using the toe or heel of your right foot, press the top of the pedal to move forward or the bottom of the pedal to move the machine in reverse. Release the pedal to slow and stop the machine.

Important: **Ensure that you allow the sprayer to come to a stop before switching between the FORWARD and the REVERSE positions.**

Note: The farther you press the pedal in either direction, the faster the sprayer travels. To obtain maximum forward speed, set the throttle lever to the FAST position and press the traction pedal all the way forward.

Note: To get maximum power under heavy load or when ascending a hill, move the throttle in the FAST position while pressing traction pedal slightly to keep the engine speed high. When the engine speed begins to decrease, release the traction pedal slightly to allow the engine speed to increase.

Brake Pedal

Use the brake pedal to stop or slow the machine (Figure 8).

⚠ CAUTION

If you operate the sprayer with poorly adjusted or worn brakes, you could lose control of the sprayer, resulting in serious injury or death to you or bystanders.

Always check the brakes before operating the sprayer and keep them properly adjusted and repaired.

Parking Brake

The parking brake is a pedal to the left of the brake pedal (Figure 8). Engage the parking brake whenever you leave the seat to prevent the sprayer from accidently moving. To engage the parking brake, press the brake pedal and while holding the brake, press the parking-brake pedal. To disengage, press and release the brake pedal. If the sprayer is parked on a steep grade, apply the parking brake and place chocks on the downhill side of the wheels.

Ignition Switch

The ignition switch (Figure 8), is used to start and shut off the engine, and the switch has 3 positions: OFF, ON/PREHEAT, and START.

Speed-Lock Switch

The speed-lock switch locks the position of the traction pedal when the switch is set (Figure 9). This ensures that the sprayer travels at a constant speed while driving the machine on level ground.

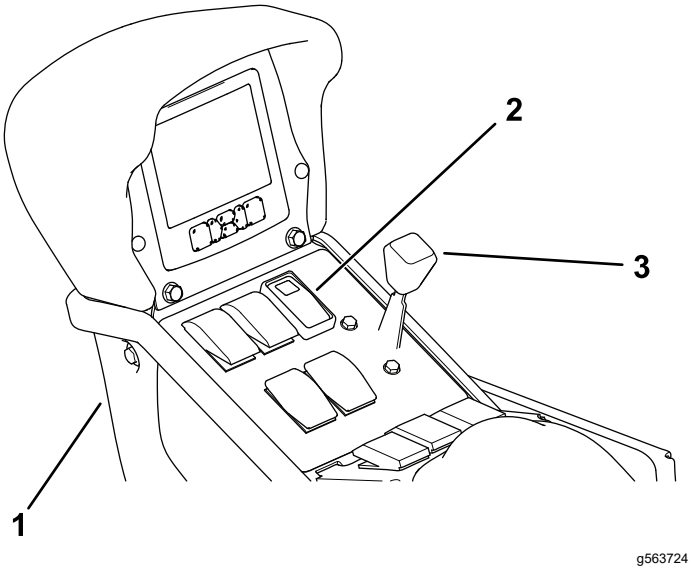

Figure 9

1. Center console
2. Speed-lock switch
3. Throttle lever

Throttle Lever

The throttle lever is located on the control panel between the seats (Figure 9), and the throttle is used to control the engine speed. Push the lever forward to increase the engine speed and pull it rearward to decrease the engine speed.

Work-Light Switch

Toggle the switch to operate the work lights (Figure 9). Push it forward to turn the lights on and rearward to turn them off.

Fuel Gauge

The fuel gauge is located on the dash of the machine and the gauge displays the level of the fuel in the tank (Figure 9).

USB Power Port

The 2-socket USB power port is located at the back of the armrest (Figure 10).

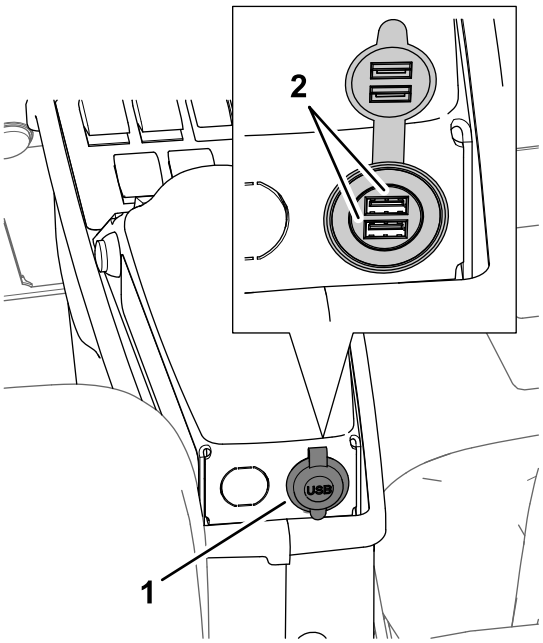

g194424

Figure 10

1. USB port
2. USB sockets

Sprayer Controls

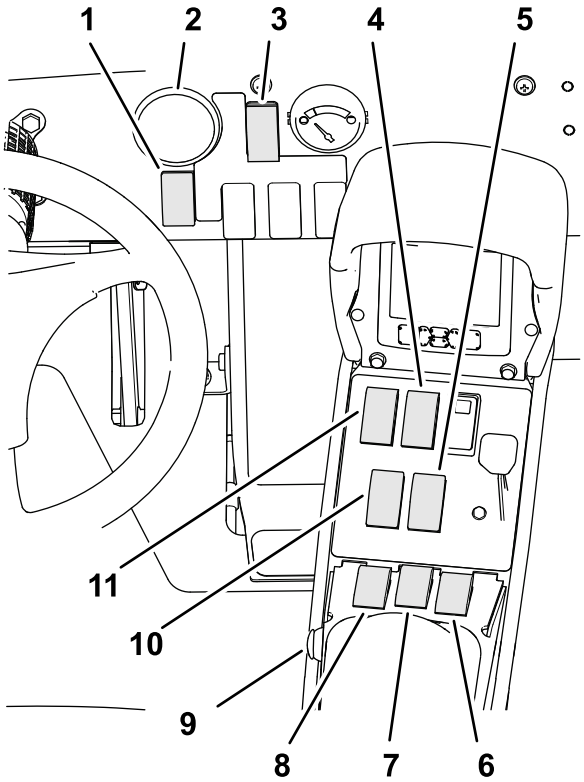

g563725

Figure 11

1. Application-rate switch
2. Pressure gauge
3. Spray-mode switch
4. Tank-agitation switch
5. Right boom-section lift switch
6. Right-section switch
7. Center-section switch
8. Left-section switch
9. Master section switch
10. Left boom-section lift switch
11. Spray-pump switch

Pressure Gauge

The pressure gauge (Figure 11) is located on the dash. This gauge shows the pressure of the fluid in the spray system in psi and kPa.

Spray-Mode Switch

Use the spray-mode switch to change between the application rate mode (closed loop) and the manual mode (open loop).

Application-Rate Switch

The application-rate switch is located on the dash to the right of the steering wheel (Figure 11). Use the application-rate switch to control the spray pump speed when operating the sprayer in the manual mode. Press and hold the switch forward to increase the application rate (pressure), or press and hold it rearward to decrease the application rate (pressure).

Spray-Pump Switch

The spray-pump switch is located on the center console to the right of the seat (Figure 11). Toggle this switch forward to run the spray pump or rearward to stop the pump. When the switch is turned on, a light on the switch illuminates.

Important: **Engage the spray-pump switch only when the engine is at LOW IDLE to avoid damaging the pump drive.**

Boom-Section Lift Switches

The boom-section lift switches are located on the center console to the right of the seat and used to raise or lower the left and right boom sections (Figure 11).

Master Section Switch

The master section switch is located on the center console of the machine. The switch allows you to start or stop the spray operation. Press the switch to enable or disable the spray system (Figure 11).

Left, Center, and Right Section Switches

The 3 section switches are located on the center console in the front of the armrest (Figure 11). Toggle each switch forward to turn the corresponding section on and rearward to turn each off. When the switch is in the ON position, an icon appears at the top of the InfoCenter.

Note: These switches affect the spray system only when the master section switch is in the ON position.

Agitation Switch

The agitation switch is located on the center console to the right of the seat (Figure 11). Toggle this switch forward to turn on the agitation in the tank or rearward to stop the agitation. When the switch is turned on, a light on the switch illuminates. To operate the agitation function, you must run the sprayer system pump and you must run the engine above low idle.

Agitation-Bypass Valve

The agitation-bypass valve redirects the flow of fluid to the sprayer-system pump when you turn off the agitation function (Figure 12). The agitation-bypass valve is located above the agitation valve. You can adjust the bypass valve to ensure that the pressure remains constant when cycling agitation on or off; refer to Adjusting the Section Bypass Valves (page 27).

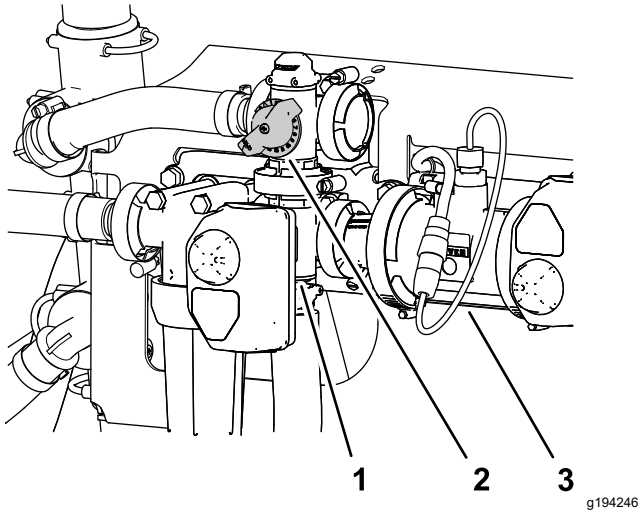

Figure 12

1. Actuator (agitation valve)
2. Agitation-bypass-valve handle
3. Flow meter

Flowmeter

The flowmeter measures the flow rate of the fluid for use by the InfoCenter system and when spraying in the application rate mode (Figure 12).

Agitation-Throttle Valve

The agitation-throttle valve is a manually-operated ball valve that controls flow to the agitation nozzles in the main tank. This valve allows you to control the sprayer-system pressure at the agitation nozzles of the main tank when larger application rates are required. The agitation-throttle valve is located above the pump (Figure 13).

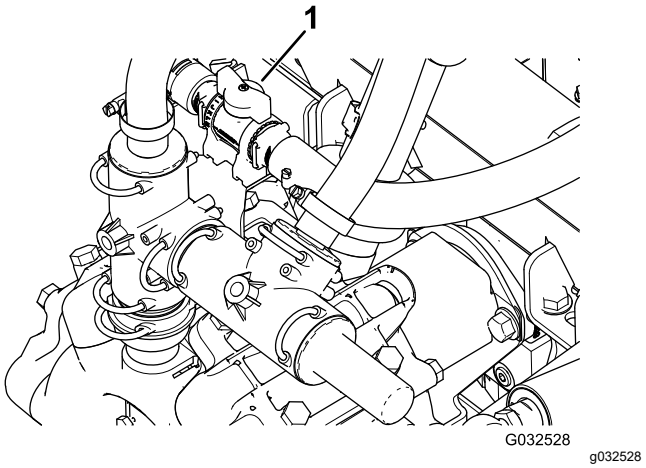

Figure 13

1. Agitation-throttle-valve handle

Section Bypass Valves

The section bypass valves are used to adjust the sprayer system pressure to the section valves to ensure that the sprayer pressure to the spray section remains constant no matter how many spray sections are on (Figure 14).

Note: Use the bypass valves when spraying in the manual mode (open loop) only.

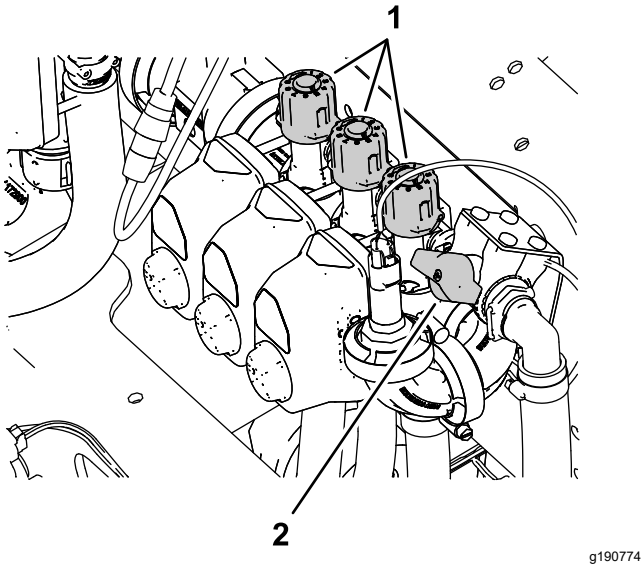

Figure 14

1. Knob (section-bypass valves)
2. Section-bypass shutoff valve

Section-Bypass Shutoff Valve

Use the section-bypass shutoff valve to control fluid flow from the section bypass valves to the tank when spraying in the manual mode (open loop); refer to Figure 14.

Note: Close the section-bypass shut off valve when spraying in the application rate mode (closed loop).

Anti-Siphon Fill Receptacle

At the front of the tank cover is a hose receptacle with a threaded fitting, a 90-degree barbed fitting, and a short hose, which you can direct toward the tank opening. This receptacle allows you to connect a water hose to it and fill the tank with water without contaminating the hose with the chemicals in the tank.

Important: **Do not lengthen the hose to allow contact with the tank fluids. The distance from the end of the hose to the uppermost water level should be within local regulatory limits.**

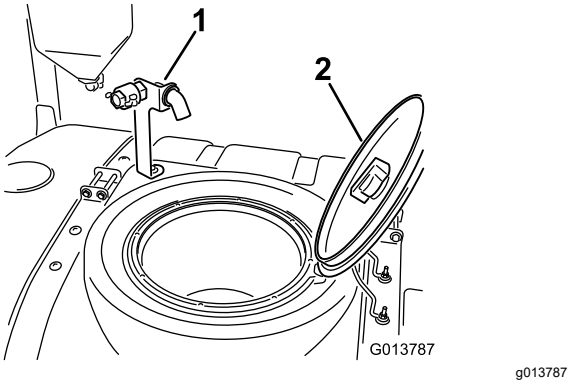

Figure 15

1. Anti-siphon fill receptacle
2. Tank cover

Tank Cover

The tank cover is located in the center, top of the tank. To open the cover, shut off the engine, turn the front half of the cover to the left, and swing it open. You can remove the strainer inside for cleaning. To seal the tank, close the cover and rotate the front half toward the right.

Display

Refer to the *Software Guide* for more information about the display.

Specifications

Note: Specifications and design are subject to change without notice.

Machine Specifications

Description	Measurement
Base weight	1307 kg (2,882 lb)
Weight with standard spray system, empty, without operator	1307 kg (2,882 lb)
Weight with standard spray system, full, without operator	2499 kg (5,510 lb)
Maximum gross vehicle weight (GVW) (on level ground)	3023 kg (6,665 lb)
Tank capacity	1135.6 L (300 US gallons)
Overall width with standard spray system sections stored in the X position	226 cm (89 inches)

Sprayer Specifications

Description	Measurement
Overall length with standard spray system	391 cm (154 inches)
Overall length with standard spray system to the top of the sections stored in the X position	442 cm (174 inches)
Overall height with standard spray system	146 cm (57.5 inches)
Overall height with standard spray system to the top of the sections stored in the X position	231 cm (91 inches)
Ground clearance	18.4 cm (7.25 inches)
Wheel base	198 cm (78 inches)

Attachments/Accessories

A selection of Toro approved attachments and accessories is available for use with the machine to enhance and expand its capabilities. Contact your authorized Toro distributor.

To ensure optimum performance and continued safety certification of the machine, use only genuine Toro replacement parts and accessories. Replacement parts and accessories made by other manufacturers could be dangerous, and such use could void the product warranty.

Operation

Note: Determine the left and right sides of the machine from the normal operating position.

Before Operation

Before Operation Safety

General Safety

- Never allow children or untrained people to operate or service the machine. Local regulations may restrict the age of the operator. The owner is responsible for training all operators and mechanics.
- Become familiar with the safe operation of the equipment, operator controls, and safety signs.
- Shut off the engine, remove the key (if equipped), and wait for all movement to stop before you leave the operator's position, Allow the machine to cool before adjusting, servicing, cleaning, or storing it.
- Know how to stop the machine and shut off the engine quickly.
- Check that operator-presence controls, safety switches, and guards are attached and functioning properly. Do not operate the machine unless they are functioning properly.
- If the machine does not function correctly or is damaged in any way, do not use the machine. Correct the problem before you operate the machine or attachment.
- Ensure that the operator and passenger areas are clean and free from chemical residue and debris buildup.
- Ensure that all fluid line connectors are tight and that all hoses are in good condition before applying pressure to the system.

Fuel Safety

- Use extreme care in handling fuel. It is flammable and its vapors are explosive.
- Extinguish all cigarettes, cigars, pipes, and other sources of ignition.
- Use only an approved fuel container.
- Do not remove the fuel cap or fill the fuel tank while the engine is running or hot.
- Do not add or drain fuel in an enclosed space.

- Do not store the machine or fuel container where there is an open flame, spark, or pilot light, such as on a water heater or other appliance.
- If you spill fuel, do not attempt to start the engine; avoid creating any source of ignition until the fuel vapors have dissipated.

Chemical Safety

Chemical substances used in the sprayer system may be hazardous and toxic to you, bystanders, and animals, and they may damage plants, soil, and other property.

- Read the information on each chemical. Refuse to operate or work on the sprayer if this information is not available.
- Before working on a sprayer system, ensure that it has been neutralized and triple rinsed according to the recommendations of the chemical manufacturer(s) and that all the valves have been cycled 3 times.
- Verify that there is an adequate supply of clean water and soap nearby, and immediately wash off any chemicals that contact you.
- Carefully read and follow the chemical warning labels and safety data sheets (SDSs) for all chemicals used, and protect yourself according to the chemical manufacturer's recommendations.
- Always protect your body while using chemicals. Use the appropriate personal protective equipment (PPE) to guard against contact with chemicals, such as the following:
  - safety glasses, goggles, and/or face shield
  - a chemical suit
  - a respirator or filter mask
  - chemical-resistant gloves
  - rubber boots or other substantial footwear
  - a clean change of clothes, soap, and disposable towels for cleanup
- Obtain proper training before using or handling chemicals.
- Use the correct chemical for the job.
- Follow the chemical manufacturer's instructions for the safely applying the chemical. Do not exceed the recommended system application pressure.
- Do not fill, calibrate, or clean the machine while people, especially children, or pets are in the area.
- Handle chemicals in a well-ventilated area.
- Do not eat, drink, or smoke while working near chemicals.
- Do not clean spray nozzles by blowing through them or placing them in your mouth.
- Always wash your hands and other exposed areas as soon as possible after working with chemicals.
- Keep chemicals in their original packages and stored in a safe location.
- Properly dispose of unused chemicals and chemical containers as instructed by the chemical manufacturer and your local codes.
- Chemicals and fumes are dangerous; never enter the tank or place your head over or in the opening of a tank.
- Follow all local, state, and federal regulations for spreading or spraying chemicals.

Performing Pre-Starting Checks

Check the following items each time you begin use of the sprayer for the day:

- Check the air pressure in the tires.

  Note: The tires of this machine are different than car tires; they require less air pressure to minimize turf compaction and damage.
- Check all fluid levels and add the appropriate amount of specified fluids, if any are found to be low.
- Check the brake pedal operation.
- Check to see that the lights are working.
- Turn the steering wheel to the left and right to check steering response.
- With the engine shut off, check for oil leaks, loose parts, and any other noticeable malfunctions.

If any of the above items are not correct, notify your mechanic or check with your supervisor before taking the sprayer out for the day. Your supervisor may want you to check other items daily, so ask what inspections you are responsible to perform.

Preparing the Machine

Checking the Engine-Oil Level

Before you start the engine and use the machine, check the oil level in the engine crankcase; refer to Checking the Engine Oil (page 54).

Checking the Cooling System

Before you start the engine and use the machine, check the cooling system; refer to Coolant Specification (page 66).

Checking the Hydraulic System

Before you start the engine and use the machine, check the hydraulic system; refer to Hydraulic Fluid Specifications (page 70).

Checking the Tire Air Pressure

Service Interval: Before each use or daily

Check the tire air pressure in the tires to ensure proper levels. Fill the tires to 138 kPa (20 psi).

Note: Also, check the tires for wear or damage.

Checking the Brakes

Service Interval: Before each use or daily

Before starting the sprayer, lightly press the brake pedal. If the pedal travels more than 2.5 cm (1 inch) before you feel resistance, adjust the brakes; refer to Adjusting the Brakes (page 68).

⚠ WARNING

If you operate the sprayer with poorly adjusted or worn brakes, you could lose control of the sprayer, resulting in serious injury or death to you or bystanders.

Always check the brakes before operating the sprayer and keep them properly adjusted and repaired.

Adding Fuel

Fuel Specification

Petroleum fuel	Use unleaded gasoline with an octane rating of 87 or higher ((R+M)/2 rating method).
Ethanol blended fuel	Use an unleaded-gasoline blend with up to 10% ethanol (gasohol) or 15% MTBE (methyl tertiary butyl ether) by volume is acceptable. Ethanol and MTBE are not the same. Gasoline with 15% ethanol (E15) by volume is not approved for use. Never use gasoline that contains more than 10% ethanol by volume, such as E15 (contains 15% ethanol), E20 (contains 20% ethanol), or E85 (contains up to 85% ethanol). Using unapproved gasoline may cause performance problems and/or engine damage which may not be covered under warranty.

Important: **For best results, use only clean, fresh fuel (less than 30 days old).**

- Do not use gasoline containing methanol.
- Do not store fuel either in the fuel tank or fuel containers over the winter unless you use a fuel stabilizer.
- Do not add oil to gasoline.

Filling the Fuel Tank

Fuel tank capacity: approximately 45 L (12 US gallons).

1. Park the machine on a level surface, engage the parking brake, shut off the spray pump, shut off the engine, remove the key, and allow the engine to cool.
2. Clean the area around the fuel-tank cap (Figure 16).

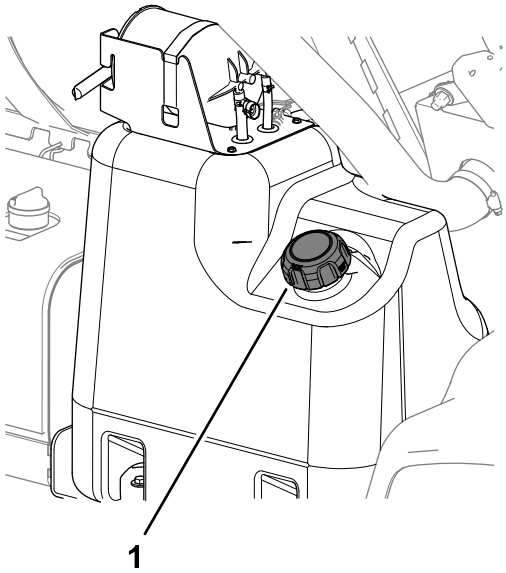

Figure 16

1. Fuel-tank cap

3. Remove the fuel-tank cap.
4. Fill the tank to about 2.5 cm (1 inch) below the top of the tank (bottom of the filler neck).

   Note: This air space in the tank allows fuel to expand. **Do not overfill the tank.**
5. Install the fuel-tank cap to the tank securely.
6. Wipe up any fuel that may have spilled.

Breaking in a New Machine

Service Interval: After the first 100 hours—To provide proper performance and long sprayer life, follow these guidelines for the first 100 operating hours:

- Check the engine-oil and fluid levels regularly and be alert for indications of overheating in any component of the sprayer.
- After starting a cold engine, let it warm up for about 15 seconds before accelerating.
- Avoid racing the engine.

- Vary the sprayer speed during operation. Avoid fast starts and quick stops.
- Refer to Daily Maintenance Checklist (page 46) for any special, low-hour checks.

Preparing the Sprayer

Selecting a Nozzle

Note: Refer to the nozzle-selection guide that is available through your authorized Toro distributor.

The turret bodies can accept up to 3 different nozzles. To select the desired nozzle, perform the following:

1. Stop the sprayer on a level surface, shut off the engine, remove the key, and engage the parking brake.
2. Set the master section switch to the OFF position and set the spray-pump switch to the OFF position.
3. Rotate the turret of the nozzles in either direction to the correct nozzle.
4. For machines operated in the application rate mode, perform a flow calibration; refer to the *Software Guide* for your machine.

Selecting a Suction Filter

Standard Equipment: 50 mesh suction filter (blue)

Use the suction filter table to identify the screen mesh for the spray nozzles you are using based on chemicals products or solutions with a viscosity equivalent to water.

Suction Filter Table

Spray Nozzle Color Code (flow rate)	Screen Mesh Size*	Filter Color Code
Yellow (0.2 gpm)	50	Blue
Red (0.4 gpm)	50	Blue
Brown (0.5 gpm)	50 (or 30)	Blue (or green)
Gray (0.6 gpm)	30	Green
White (0.8 gpm)	30	Green
Blue (1.0 gpm)	30	Green
Green (1.5 gpm)	30	Green
*The mesh size of the suction filters in this table are based on spray chemicals or solutions with the viscosity equivalent to water.		

Important: **When you spray with higher viscosity (thicker) chemical products or solutions with wettable powders, you may need to use a coarser screen mesh for the optional suction filter; refer to Figure 17.**

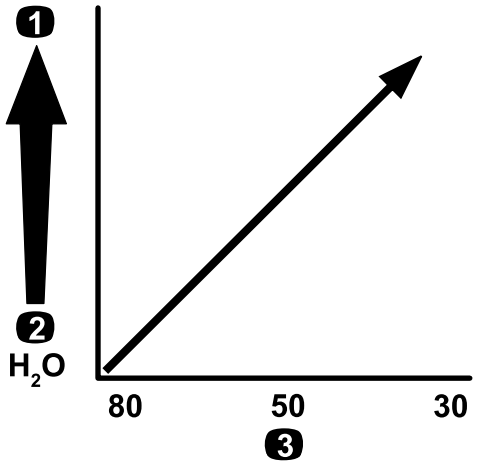

g214212

Figure 17

Mesh size—chemical or solution viscosity

1. Higher-viscosity chemicals or solutions
2. Lower-viscosity chemicals or solutions
3. Screen mesh size

When you spray at a higher application rate, consider using a coarser optional suction-filter mesh; refer to Figure 18.

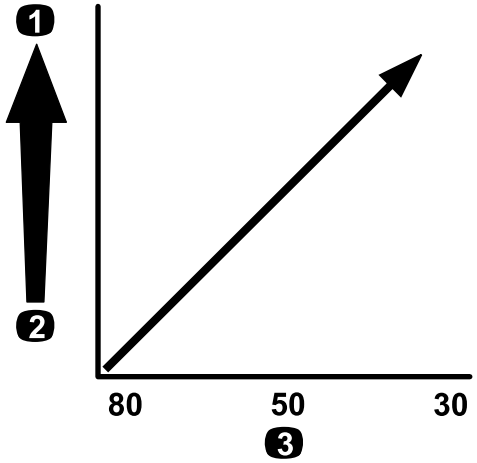

g214214

Figure 18

Mesh size—application rate

1. Higher application rate
2. Lower application rate
3. Screen mesh size

Selecting a Pressure Filter

Available screen sizes include:

Standard Equipment: 50 mesh suction filter (blue)

Use the pressure filter table to identify the screen mesh for the spray nozzles you are using based on chemicals products or solutions with a viscosity equivalent to water.

Pressure Filter Table

Spray Nozzle Color Code (flow rate)	Screen Mesh Size*	Filter Color Code
As required for low viscosity chemicals or solutions or low application rates	100	Green
Yellow (0.2 gpm)	80	Yellow
Red (0.4 gpm)	50	Blue
Brown (0.5 gpm)	50	Blue
Gray (0.6 gpm)	50	Blue
White (0.8 gpm)	50	Blue
Blue (1.0 gpm)	50	Blue
Green (1.5 gpm)	50	Blue
As required for high viscosity chemicals or solutions or high application rates	30	Red
As required for high viscosity chemicals or solutions or high application rates	16	Brown
*The mesh size of the pressure filters in this table are based on spray chemicals or solutions with the viscosity equivalent to water.		

Important: **When you spray with higher viscosity (thicker) chemical products or solutions with wettable powders, you may need to use a coarser screen mesh for the optional pressure-filter; refer to Figure 19.**

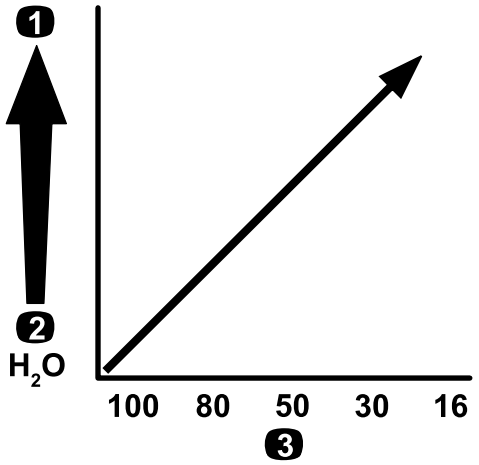

g214211

Figure 19

Mesh size—chemical or solution viscosity

1. Higher-viscosity chemicals or solutions
2. Lower-viscosity chemicals or solutions
3. Screen mesh size

When you spray at a higher application rate, consider using a coarser optional pressure-filter mesh; refer to Figure 20.

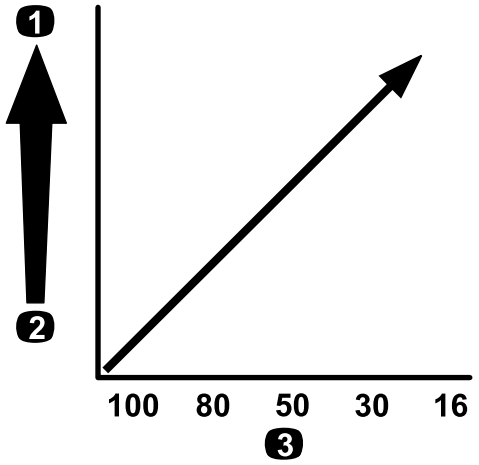

g214240

Figure 20

Mesh size—application rate

1. Higher application rate
2. Lower application rate
3. Screen mesh size

Selecting a Nozzle-Tip Filter (Optional)

Note: The use the optional nozzle-tip filter to protect the spray-nozzle tip and increase its service life.

Use the nozzle-tip filter table to identify the screen mesh for the spray nozzles you are using based on chemicals products or solutions with a viscosity equivalent to water.

Nozzle-Tip Filter Table

Spray Nozzle Color Code (flow rate)	Filter Mesh Size*	Filter Color Code
Yellow (0.2 gpm)	100	Green
Red (0.4 gpm)	50	Blue
Brown (0.5 gpm)	50	Blue
Gray (0.6 gpm)	50	Blue
White (0.8 gpm)	50	Blue
Blue (1.0 gpm)	50	Blue
Green (1.5 gpm)	50	Blue
*The mesh size of the nozzle filters in this table are based on spray chemicals or solutions with the viscosity equivalent to water.		

Important: **When you spray with higher viscosity (thicker) chemical products or solutions with wettable powders, you may need to use a coarser screen mesh for the optional tip-filter; refer to Figure 21.**

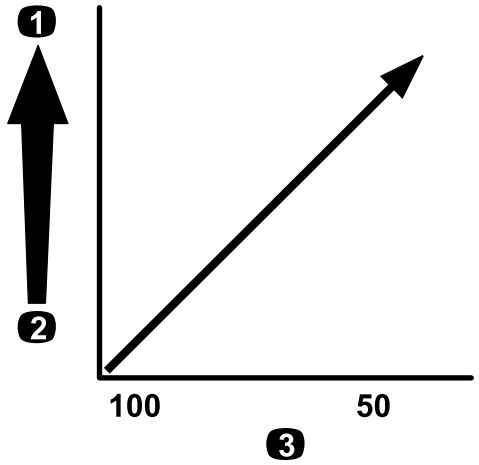

g214245

Figure 21

Mesh size—chemical or solution viscosity

1. Higher-viscosity chemicals or solutions
2. Lower-viscosity chemicals or solutions
3. Screen mesh size

When you spray at a higher application rate, consider using a coarser tip-filter mesh; refer to Figure 22.

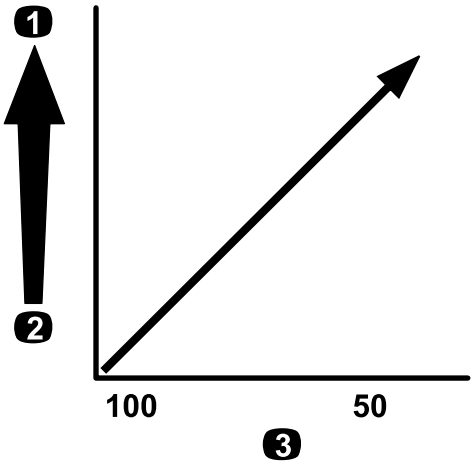

g214245

Figure 22

Mesh size—application rate

1. Higher application rate
2. Lower application rate
3. Screen mesh size

Filling the Tanks

Filling the Fresh-Water Tank

Important: **Do not use reclaimed water (gray water) in the fresh-water tank.**

Note: The fresh-water tank is used to supply a source of fresh water for you to wash chemicals off your skin, eyes, or other surfaces in the case of accidental exposure.

Always fill the fresh-water tank with clean water before handling or mixing any chemicals.

- To fill the tank, unscrew the cap at the top of the tank, fill the tank with fresh water, and install the cap (Figure 23).
- To open the fresh-water tank spigot, turn the lever on the spigot (Figure 23).

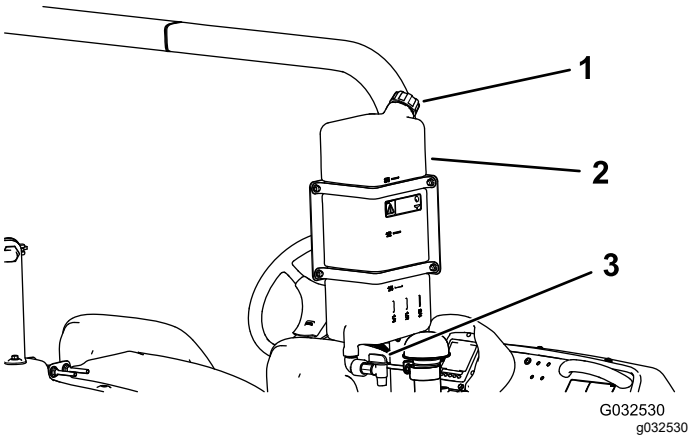

Figure 23

1. Filler cap
2. Fresh-water tank
3. Spigot

Filling the Spray Tank

Install the optional Chemical Pre-Mix Kit for optimal mixing and exterior tank cleanliness.

Important: **Whenever possible, do not use reclaimed water (gray water) in the spray tank.**

Important: **Ensure that the chemicals you use are compatible with Viton™ (see the manufacturer's label; it should indicate if it is not compatible). Using a chemical that is not compatible with Viton will degrade the O-rings in the sprayer, causing leaks.**

Important: **The tank-volume markings are for reference only and cannot be considered accurate for calibration.**

1. Stop the machine on a level surface, shut off the engine, remove the key, and engage the parking brake.
2. Determine the amount of water needed to mix the amount of chemical you need as prescribed by the chemical manufacturer.
3. Open the tank cover on the spray tank.

   Note: The tank cover is located at the center of the top of the tank. To open it, turn the front half of the cover counterclockwise and swing it open. You can remove the strainer under the tank cover and clean the strainer.
4. Assemble the fill hose to the quick disconnect fitting of the anti-siphon fill receptacle.
5. Add 3/4 of the required water to the spray tank (Figure 24).

   Important: **Always use fresh, clean water in the spray tank. Do not pour concentrate into an empty tank.**

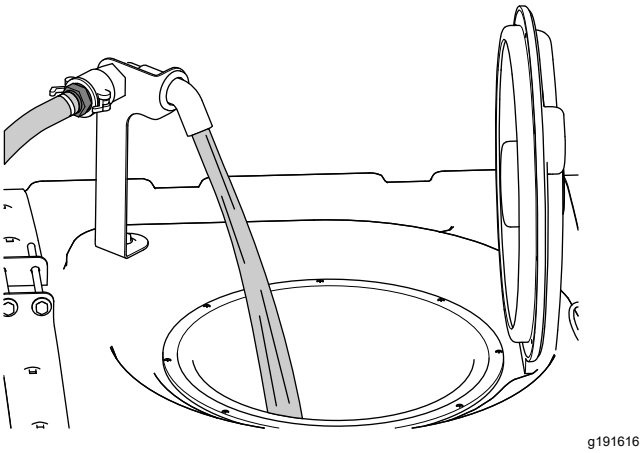

Figure 24

6. Start the engine, engage the parking brake, set the spray-pump switch to the ON position, and move the throttle lever to HIGH IDLE.
7. Set the agitation switch to the ON position.

   Important: **Prior to introducing wettable powders into any Toro Spray System mix the powders in a suitable container with enough fresh water to create a free flowing slurry. Failure to do so may result in chemical deposits on the bottom of the tank, degraded agitation, clogging of filters, and improper application rates.**

   Toro recommends using the approved Eductor Kit for this machine. Contact your authorized Toro distributor for more information.
8. Add the proper amount of chemical concentrate to the tank, as directed by the chemical manufacturer.
9. Add the remaining water to the tank, remove the fill hose, and close the tank cover.

Note: To seal the tank, close the cover and rotate the front half clockwise.

Important: **After filling the tank for the first time, check the tank straps for any play. Tighten as necessary.**

Inspecting the Tank Straps

Service Interval: Before each use or daily—Check the tank straps.

Important: **Overtightening the tank strap fasteners can result in deforming and damaging the tank and straps.**

Important: **Whenever possible, do not use reclaimed water (gray water) in the spray tank.**

1. Fill the main tank with water.
2. Check to see if there is any movement between the tank straps and the tank (Figure 25).

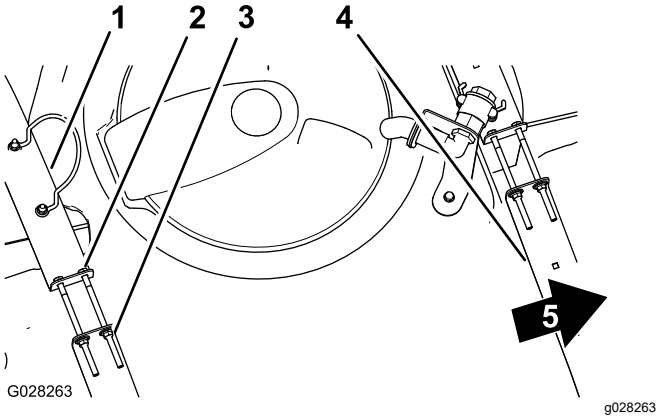

Figure 25

1. Rear tank strap
2. Bolt
3. Flanged locknut
4. Forward tank strap
5. Front of the machine

3. If the tank straps fit loose to the tank, tighten the flanged locknuts and bolts at the top of straps until the straps are flush with the surface of the tank (Figure 25).

   Note: **Do not overtighten the tank strap hardware.**

Calibrating the Section-Bypass Valves

Manual Mode Only

Important: **When operating in application rate mode, you must set the section-bypass valves to the closed position.**

Important: **Whenever possible, do not use reclaimed water (gray water) in the spray tank.**

Before using the sprayer for the first time, whenever you change the nozzles, or as needed, calibrate the sprayer flow, speed, and set the section bypass.

Important: **Select an open flat area to perform this procedure.**

Preparing the Machine

1. Fill the spray tank halfway with clean water.
2. Lower the spray sections.
3. Engage the parking brake.
4. Set the spray control switch to manual.
5. Set the 3 section switches to the ON position, but leave the master section switch in the OFF position.
6. Set the spray-pump switch to the ON position, and turn on the agitation.
7. On the InfoCenter, navigate to the Calibration screen and select Test Speed; refer to Simulating a Test Speed in the *Software Guide* for your machine.
   A. Press buttons 3 or 4 to raise or lower the simulated speed to 5.6 km/h (3.5 mph).
   B. Press button 4 to toggle ON test speed simulation.
   C. Press button 5 to save and exit the TEST SPEED screen.

Adjusting the Section Bypass Valves

1. Using the application-rate switch, adjust the application rate according to the table that follows.

Nozzle Application Rate Table

Nozzle Color	SI (Metric)	English	Turf
Yellow	159 L/ha	17 gpa	0.39 gpk
Red	319 L/ha	34 gpa	0.78 gpk
Brown	394 L/ha	42 gpa	0.96 gpk
Gray	478 L/ha	51 gpa	1.17 gpk
White	637 L/ha	68 gpa	1.56 gpk
Blue	796 L/ha	85 gpa	1.95 gpk
Green	1,190 L/ha	127 gpa	2.91 gpk

2. Turn off the left-section switch and adjust the section-bypass knob (Figure 26) until the rate displayed is at the previous level according to the table.

   Note: The numbered indicators on the bypass knob and needle are for reference only.

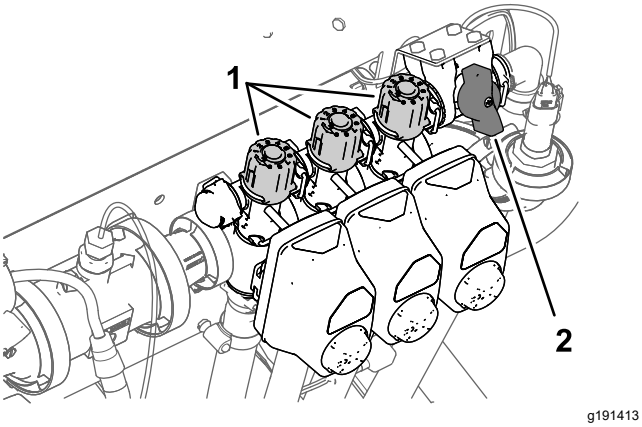

Figure 26

1. Section-bypass adjustment knobs
2. Sections-bypass shutoff valve

3. Turn on the left-section switch and turn off the right-section switch.
4. Adjust the right section-bypass knob (Figure 26) until the rate displayed is at the previous level according to the table.
5. Turn on the right-section switch and turn off the center-section switch.
6. Adjust the center section-bypass knob (Figure 26) until the rate displayed is at the previous level according to the table.
7. Turn off the master section switch.
8. Turn off the spray pump.

Agitation-Bypass Valve Knob Position

- The agitation-bypass valve is in the full-open position as shown in Figure 27A.
- The agitation-bypass valve is in the closed (0) position as shown in Figure 27B.
- The agitation-bypass valve is in an intermediate (adjusted relative to the pressure gauge for the sprayer system) position as shown in Figure 27C.

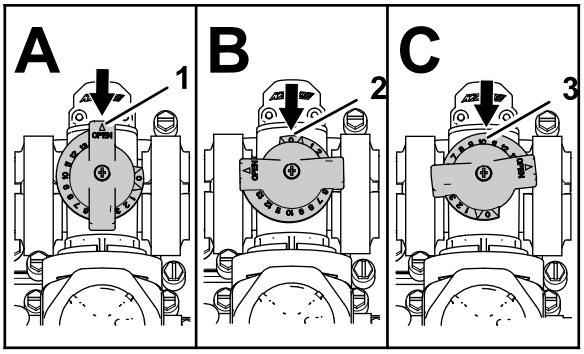

Figure 27

1. Open
2. Closed (0)
3. Intermediate position

Calibrating the Agitation-Bypass Valve

Service Interval: Yearly—Calibrate the agitation-bypass valve.

Important: **Whenever possible, do not use reclaimed water (gray water) in the spray tank.**

1. Select an open, flat area to perform this procedure.
2. Fill the spray tank half full with clean water.
3. Verify that the agitation-control valve is open.

   Note: If it has been adjusted, open it completely at this time.
4. Engage the parking brake and start the engine.
5. Set the sprayer mode button to the Manual Mode; refer to Spraying in the Manual Mode (page 34).
6. Set the spray-pump switch and the agitation switch to the ON position.
7. Turn the master section switch to the OFF position.
8. Move the throttle lever to the FAST position.
9. Use the application-rate switch to adjust the sprayer-system pressure to 689 kPa (100 psi).
10. Turn the agitation switch to the OFF position and read the pressure gauge.
    - If the pressure gauge indicates 689 kPa (100 psi), the agitation-bypass valve is properly calibrated.
    - If the pressure gauge indicates differently, continue to the next step.
11. Adjust the agitation-bypass valve (Figure 28) on the backside of the agitation valve until the sprayer system pressure indicated on the gauge indicates 689 kPa (100 psi).

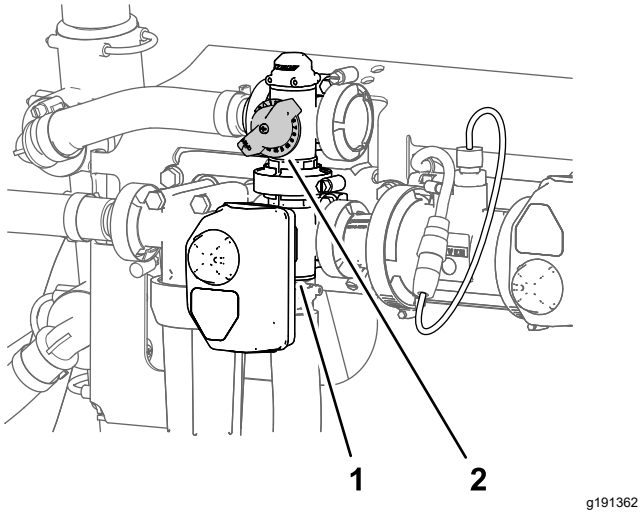

Figure 28

1. Actuator (agitation valve) 2. Agitation-bypass valve

12. Turn the spray-pump switch to the OFF position.
13. Move the throttle lever to the IDLE/SLOW position and turn the key switch to the OFF position.

Locating the Spray Pump

The spray pump is located near the back of the tank on the left side (Figure 29).

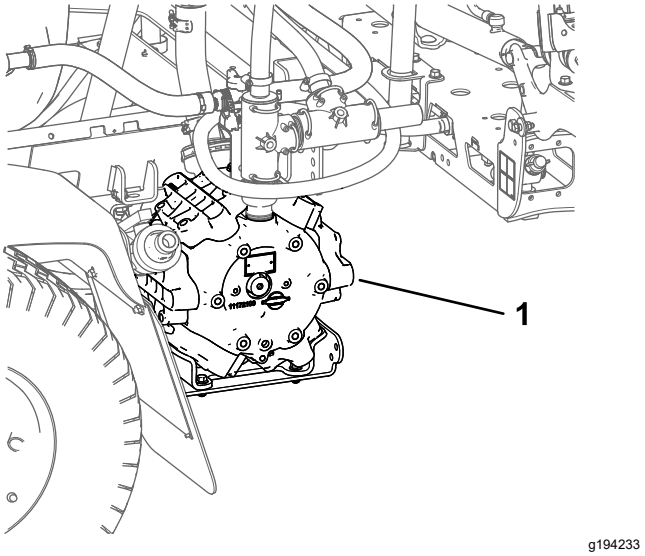

Figure 29

1. Spray pump

During Operation

During Operation Safety

General Safety

- The owner/operator can prevent and is responsible for accidents that may cause personal injury or property damage.
- Wear appropriate clothing, including eye protection; long pants; substantial, slip-resistant footwear; and hearing protection. Tie back long hair and do not wear loose clothing or loose jewelry.
- Wear appropriate personal protective equipment as directed in Chemical Safety.
- Use your full attention while operating the machine. Do not engage in any activity that causes distractions; otherwise, injury or property damage may occur.
- Do not operate the machine while ill, tired, or under the influence of alcohol or drugs.
- Do not carry more than 1 passenger on the machine; the passenger should sit in the designated seating position only.
- Operate the machine only in good visibility. Avoid holes or hidden hazards.
- Before you start the engine, ensure that you are in the operating position, the traction pedal is in the NEUTRAL position, and the parking brake is engaged.
- Remain seated whenever the machine is in motion. Keep both hands on the steering wheel whenever possible, and always keep your arms and legs within the operator's compartment.
- Use care when approaching blind corners, shrubs, trees, or other objects that may obscure your vision.
- Before backing up, look rearward and ensure that no one is behind you. Back up slowly.
- Never spray while people, especially children, or pets are nearby.
- Do not operate the machine near drop-offs, ditches, or embankments. The machine could suddenly roll over if a wheel goes over the edge or if the edge gives way.
- Reduce the speed when operating on rough terrain, uneven ground, and near curbs, holes, and other sudden changes in terrain. Loads may shift, causing the machine to become unstable.
- Stop the machine, shut off the engine, remove the key, engage the parking brake, and inspect for damage after striking an object or if there is

an abnormal vibration in the machine. Make all necessary repairs before resuming operation.

- Slow down and use caution when making turns and crossing roads and sidewalks with the machine. Always yield the right-of-way.
- Use extra caution when operating the machine on wet surfaces, in adverse weather conditions, at higher speeds, or with a full load. Stopping time and distance increase in these conditions.
- Do not touch the engine or muffler while the engine is running or soon after it has shut off. These areas may be hot enough to cause burns.
- Before you leave the operator's position, do the following:
  - Park the machine on a level surface.
  - Move the traction pedal to the NEUTRAL position.
  - Shut off the spray pump.
  - Engage the parking brake.
  - Shut off the engine and remove the key (if equipped).
  - Wait for all movement to stop.
- Never run an engine in an area where exhaust gasses are enclosed.
- Do not operate the machine when there is the risk of lightning.
- Use accessories and attachments approved by Toro only.

Rollover Protection System (ROPS) Safety

Note: For each machine covered in this *Operator's Manual*, a cab installed by Toro is a ROPS.

- Do not remove the ROPS from the machine.
- Fasten the seat belt and ensure that you can release it quickly in an emergency. Always wear your seat belt.
- Check carefully for overhead obstructions and do not contact them.
- Keep the ROPS in safe operating condition by thoroughly inspecting it periodically for damage and keeping all the mounting fasteners tight.
- Maintain and clean the seat belt(s) as necessary.
- Replace any damaged ROPS component. Do not repair or alter it.

Slope Safety

Slopes are a major factor related to loss of control and rollover accidents, which can result in severe injury or death. You are responsible for safe slope operation. Operating the machine on any slope requires extra caution.

- Review the slope instructions listed below for operating the machine on slopes and to determine whether you can operate the machine in the conditions on that day and at that job site. Changes in the terrain can result in a change in slope operation for the machine.
- Determine if the slope is safe for machine operation, including surveying the site. Always use common sense and good judgment when performing this survey.
- Avoid starting, stopping, or turning the machine on slopes. Travel up and down on slopes. Avoid making sudden changes in speed or direction. If you must turn the machine, turn it slowly and gradually downhill, if possible. Use care when reversing the machine.
- Do not operate a machine when you are uncertain about the traction, steering, or stability.
- Remove or mark obstructions such as ditches, holes, ruts, bumps, rocks, or other hidden hazards. Tall grass can hide obstructions. Uneven terrain could overturn the machine.
- Be aware that operating the machine on wet surfaces, across slopes, or downhill may cause the machine to lose traction. Loss of traction to the wheels may result in sliding and a loss of braking and steering.
- Use extreme caution when operating the machine near drop-offs, ditches, embankments, water hazards, or other hazards. The machine could suddenly roll over if a wheel goes over the edge or the edge caves in. Establish a safety area between the machine and any hazard.
- Use extra care while operating the machine with attachments; they can affect the stability of the machine.
- If the engine stalls or you begin to lose momentum while climbing a hill, gradually apply the brakes and slowly back straight down the hill.
- Always keep the transmission in gear (if applicable) when you drive the machine down a slope.
- Do not park the machine on an incline.
- The weight of the material in the tank can change the handling of the machine. To avoid loss of control and personal injury, follow these guidelines:
  - When operating with a heavy load, reduce your speed and allow for sufficient braking distance. Do not suddenly apply the brakes. Use extra caution on slopes.
  - Liquid loads shift, especially while turning, going up or down slopes, suddenly changing speeds, or while driving over rough surfaces.

Shifting loads can cause the machine to tip over.

Operating the Machine

Starting the Engine

1. Sit on the operator's seat and keep your foot off the traction pedal.
2. Ensure that the following controls are set:
   - The parking brake is engaged.
   - The traction pedal is in the NEUTRAL position.
   - The spray pump is shut off.
   - The throttle is in the SLOW position.
3. Turn the key to the START position.
4. Crank the engine for no longer than 15 seconds.
5. Release the key when the engine starts.
6. Run the engine at IDLE speed or partial throttle until the engine warms up.

Driving the Machine

1. Release the parking brake and press the traction pedal forward to drive the machine forward or press the pedal rearward to drive the machine in reverse.

   Important: **Ensure that you allow the sprayer to come to a stop before switching between the FORWARD and REVERSE positions.**
2. To slowly stop the machine, release the traction pedal.

   Note: The traction pedal returns to the NEUTRAL position.
3. To stop quickly, press the brake pedal.

   Note: The stopping distance of the machine may vary depending on the sprayer-tank load and ground speed of the machine.

Setting the Ground-Speed-Lock Switch

⚠ CAUTION

If you press the ground-speed-lock switch and do not have your foot on the traction pedal, the traction unit may suddenly stop and cause you to lose control, possibly injuring you or bystanders.

Ensure that you have your foot on the traction pedal when you disengage the ground-speed-lock switch.

1. Start the spray pump by pressing the spray-pump switch to the ON position; refer to Spray-Pump Switch (page 18).
2. Drive forward and attain the desired ground speed; refer to Driving the Machine (page 31).

   Note: You must drive the machine less than 11 km/h (7 mph) to set the ground-speed lock.
3. Press the top of the ground-speed-lock switch.

   Note: The light on the switch illuminates.
4. Take your foot off the traction pedal.

   Note: The sprayer maintains the speed that you set.
5. To release the ground-speed-lock switch, either place your foot on the traction pedal and press the bottom of the switch or remove your foot from the traction pedal and press the brake pedal.

   Note: The light on the switch turns off and the traction control returns to the traction pedal.

Shutting Off the Engine

1. Move all the controls to the NEUTRAL position.
2. Press the brake to stop the sprayer.
3. Engage the parking brake.
4. Move the throttle lever to the IDLE/SLOW position.
5. Turn the key to the OFF position.
6. Remove the key from the switch to prevent someone from accidentally starting the engine.

Operating the Sprayer

To operate the sprayer: fill the sprayer tank, apply the product mix to the job site, and clean the tank and spray system. You must complete all 3 of these steps in succession to avoid damaging the sprayer. For example, do not mix and add chemicals in the sprayer tank at night and then spray in the morning. This leads to separation of the chemicals and possible damage to the sprayer components.

⚠ CAUTION

Chemicals are hazardous and can cause personal injury.

- **Read the directions on the chemical labels before handling the chemicals and follow all manufacturer recommendations and precautions.**
- **Keep chemicals away from your skin. Should contact occur, wash the affected area thoroughly with soap and clean water.**
- **Wear appropriate personal protective equipment (PPE) per the chemical manufacturer's instructions.**

The Multi Pro® Sprayer is specifically designed for high durability, provides the long sprayer life. Different materials have been chosen for specific reasons at different locations on your sprayer to meet this goal. Unfortunately, there is no single material which is perfect for all foreseeable applications.

Some chemicals are more aggressive than others and each chemical interacts differently with various materials. Some consistencies (e.g., wettable powders, charcoal) are more abrasive and lead to higher wear rates. If a chemical is available in a formulation that would provide increased life to the sprayer, use this alternative formulation.

As always, remember to clean your sprayer and spray system thoroughly after all applications. This ensures that your sprayer has a long and trouble-free life.

Note: If you have questions or need additional information regarding the spray-control system, refer to the *Operator's Manual* supplied with the system.

Sprayer Functions for Application Rate Mode and Manual Mode

Refer to the *Software Guide* for the Multi Pro 5800-D and 5800-G turf sprayers with ExcelaRate spray system for information on the following:

Before Operation

- The InfoCenter home screen
- The main menu screen
- The main menu sub-screens
- The service screens
- The diagnostic screens
- The About screens

During Operation

- Entering job information
- InfoCenter spray-area screens
- InfoCenter advisories

Spraying with the ExcelaRate Sprayer System

Refer to the *Software Guide* for the Multi Pro 5800-D and 5800-G turf sprayers with ExcelaRate spray system for information on the following procedures:

Important: **To ensure that the product remains well mixed, use the agitation feature whenever you have solution in the tank.**

Spraying in the Application Rate Mode

1. Ensure that the spray system is calibrated for the active spray nozzles that you have selected; Refer to the *Software Guide* for the machine.
2. Rotate the knob for the section-bypass shutoff valve to the closed position.

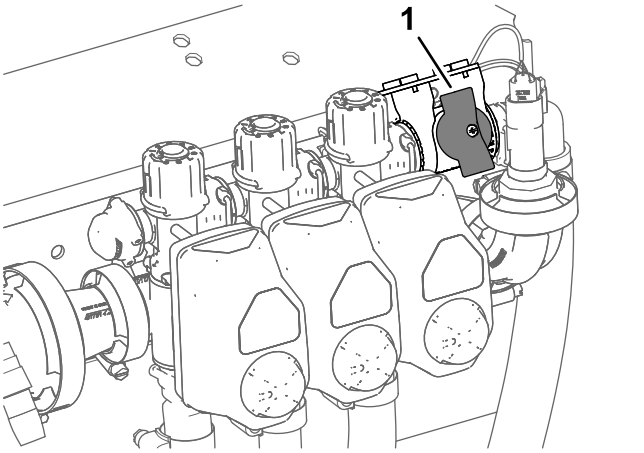

Figure 30

1. Section-bypass shutoff valve (closed position)

3. Set the sprayer mode button to the Application Rate Mode.

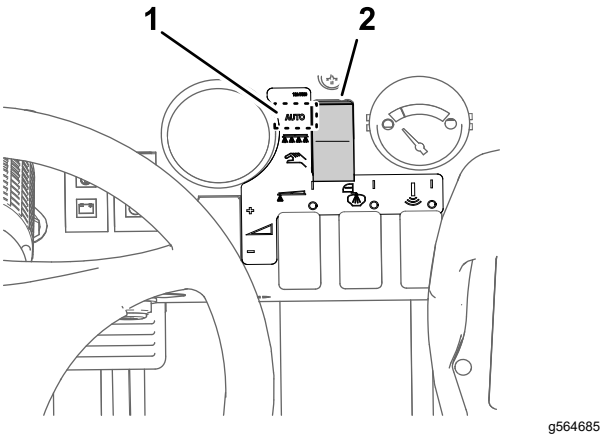

Figure 31

1. Application-rate mode position
2. Sprayer-mode switch

4. Move the sprayer to the area of turf that you are spraying.
5. If you are collecting area sprayed and volume sprayed data for each job site, select a sub-area screen (sub-areas 1 through 20) to record for the individual area and volume information; refer to Using the Sub-Area Screen in the *Software Guide* for the machine.

   Note: When you move to a different job site, you need to select another sub-area screen to record the individual area and volume information.
6. If you need to switch the active rate between the rate 1 value and the rate 2 value, from the display home screen press buttons 1 and 2 simultaneously to select RATE 1 or press buttons 4 and 5 simultaneously to select RATE 2; Refer to the *Software Guide* for the machine.
7. Set the spray section switch(es) to the ON position.

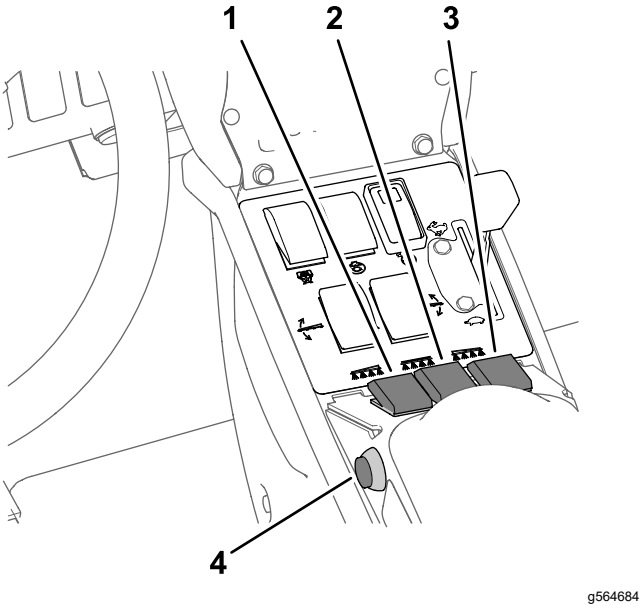

Figure 32

1. Left spray-section switch
2. Center spray-section switch
3. Right spray-section switch
4. Master section switch

8. Set the agitation switch and the spray-pump switch to the ON position.

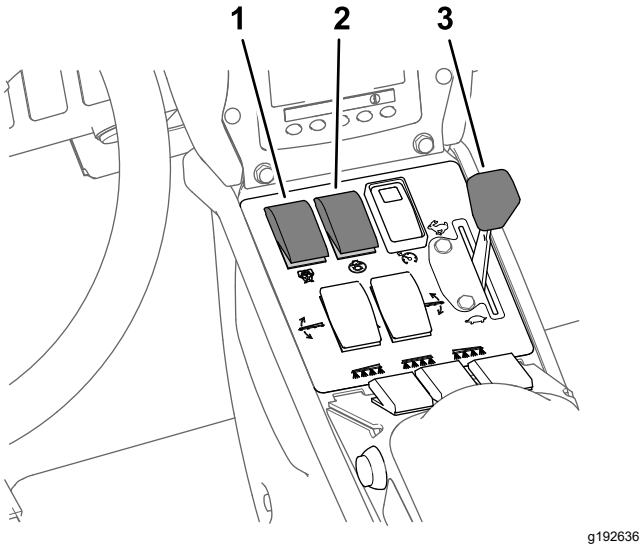

Figure 33

1. Sprayer-pump switch
2. Agitation switch
3. Throttle

9. Set the throttle to the FAST position.
10. Drive at the desired speed and then set the master section switch to the ON position to begin spraying.

    Note: Use the master section switch to start and stop the flow of chemical s to the selected spray sections.

11. When finished spraying, set the master section switch to the OFF position to turn off all spray sections, then set the spray-pump switch to the OFF position.

    Note: Raise the outer spray sections to the transport position and drive the sprayer to the cleaning area.

    Important: **Always raise the boom sections until they have moved completely into section-transport cradle forming the "X" transport position and the lift cylinders are fully retracted whenever you move the sprayer from 1 spraying area to another, or move to a storage or cleaning area.**

Spraying in the Manual Mode

Note: This procedure assumes that the spray pump is on; refer to Figure 33 in Spraying in the Application Rate Mode (page 32).

1. Ensure that the sprayer system is adjusted for the active spray nozzles that you have selected; refer to Spraying in the Application Rate Mode (page 32).
2. Set the sprayer mode button to the Manual Mode (Figure 34).

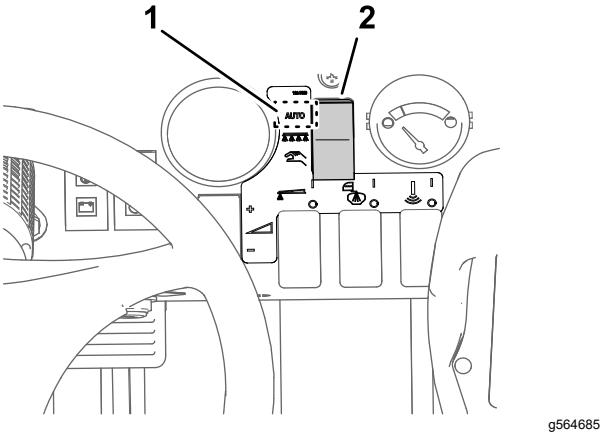

Figure 34

1. Manual mode position
2. Sprayer-mode switch

3. Set the master section switch to the OFF position; refer to Figure 32 in Spraying in the Application Rate Mode (page 32).
4. Adjust the throttle to the desired engine speed to spray; refer to Figure 33 in Spraying in the Application Rate Mode (page 32).
5. Drive to the spraying location.
6. Lower the sections into position.
7. Set the individual section switches, as needed, to the ON position; refer to Figure 32 in Spraying in the Application Rate Mode (page 32).
8. Use the application-rate switch to achieve the desired spray pressure as indicated in the nozzle-selection guide provided with the sprayer (Figure 35).

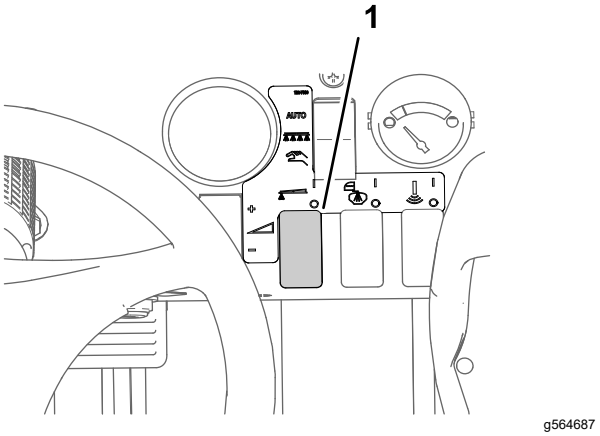

Figure 35

1. Application-rate switch

9. Drive at the desired speed and then set the master section switch to the ON position to begin spraying; refer to Figure 32 in Spraying in the Application Rate Mode (page 32).

   Note: When the tank is nearly empty, the agitation may cause foaming in the tank. In this case, turn the agitation switch to the OFF position. Alternatively, you can add anti-foaming agent to the tank.
10. When you are finished spraying, set the master section switch to the OFF position to turn off all sections, then set the spray-pump switch to the OFF position.

    Note: Return the sections to the transport position and drive the sprayer to the cleaning area.

    Important: **Always raise the sections until they have moved completely into section-transport cradle forming the "X" transport position and the section cylinders are fully retracted whenever you move the sprayer from 1 spraying area to another, or move to a storage or cleaning area.**

Catch Test

Important: **You will need to provide a graduated catch container (a container with 0.01 ml (1/2 fl. oz) increments is preferred) and a stopwatch to complete this procedure.**

Preparing for the Catch Test

Important: **Whenever possible, do not use reclaimed water (gray water) in the spray tank.**

1. Ensure that the sprayer tank is clean.
2. Fill the sprayer tank with at least 568 L (150 US gallons) of fresh water.
3. Ensure that the nozzles that you intend to test are in the active spray (down) position.
4. For machines operated in the application-rate mode, ensure that the knob for the section-bypass shutoff valve is in the closed position.

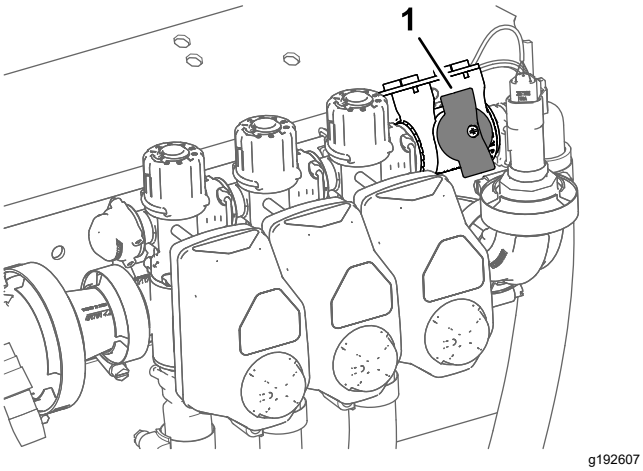

Figure 36

1. Section-bypass shutoff valve (closed position)

5. For machines operated in the application-rate mode, ensure that the section-bypass shutoff valve is closed.
6. Engage the parking brake and start the engine.

   Note: Allow the engine to warm for 10 minutes.
7. For machines operated in the application-rate mode, perform the steps in Using the Test Speed; refer to the *Software Guide* for the machine.

   Note: Set the simulated test speed between 4 km/h (2 mph) and 14 km/h (9 mph).

Performing a Catch Test

1. Set the spray section switch(es) to the ON position for the section(s) that you are testing.
2. Set the throttle to the FAST position.
3. Set the master section switch to the ON position.
4. Perform a 15-second catch test at 1 of the active spray nozzles.

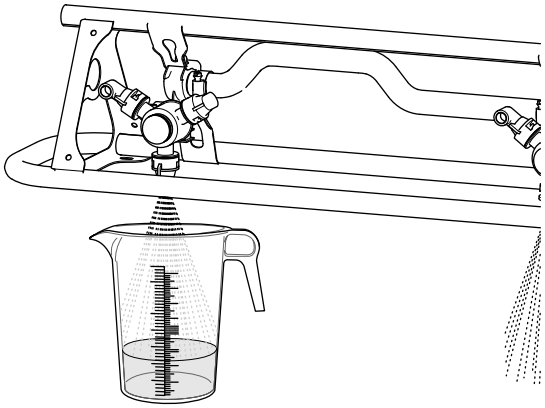

Figure 37

5. Shut off the master section switch, set the throttle to the slow position, shut off the spray pump, and shut off the engine.
6. Set the graduated container on a level surface and note the fluid volume (Figure 38).

   Important: **When you are reading the graduated container, you must set the container on a level surface.**

   Important: **When you are reading the graduated container, read the fluid volume in the graduated container at the lowest point of the fluid-surface curve.**

   Important: **Small errors reading the fluid volume in the graduated container will significantly impact the accuracy of the sprayer calibration.**

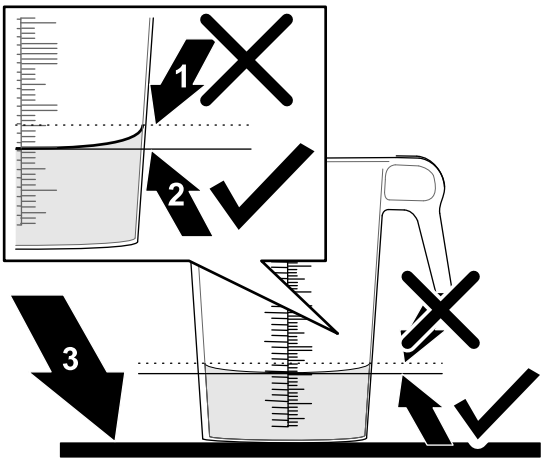

Figure 38

1. Highest point of the fluid-surface curve (**do not** measure here)
2. Lowest point of the fluid-surface curve (**measure here**)
3. Level surface

7. Compare the volume of water in the graduated container with the nozzle volume in the 15-second catch test table.

15-Second Catch Test Table

Nozzle Color	Milliliters collected in 15 seconds	Ounces collected in 15 seconds
Yellow	189	6.4
Red	378	12.8
Brown	473	16.0
Gray	567	19.2
White	757	25.6
Blue	946	32.0
Green	1,419	48.0

8. If the fluid level in the graduated catch container is 7.4 ml (1/4 fl oz) more or less than the nozzle volume in the 15-second catch test table, perform 1 of the following:
   - Perform a flow calibration, or replace worn nozzles and perform a flow calibration; refer to the flow calibration procedure in the *Software Guide* for the machine.
   - Calibrate the agitation bypass valve, or replace worn nozzles and calibrate the agitation bypass valve; refer to Calibrating the Agitation-Bypass Valve (page 28).

Positioning the Spray Sections

The boom-section lift switches on the sprayer control panel allows you to move the outer spray sections between transport position and spray position without leaving the operator's seat. Whenever possible, stop the machine before changing spray section positions.

Changing the Spray Section Position

Perform the following steps to move the outer spray sections to the spray position:

1. Park the machine on a level surface.
2. Use the boom-section lift switches to lower the outer sections.

   Note: Wait until the outer spray sections reach the full, extended spray position.

Complete the sprayer job, then perform the following steps to retract the outer spray sections into the transport position:

Important: **If your machine has the Drift Reduction Boom Shroud Kit, the Ultra Sonic Boom Leveling Kit installed, or both move the outer spray sections to the transport position one at a time.**

Moving both outer spray sections at the same time with the shroud kit or leveling kit installed may damage the shrouds, the sensors, or both.

1. Park the machine on a level surface.
2. Use the boom-section lift switches to raise the outer spray sections, until they have moved completely into boom-section transport cradles forming the “X” transport position, and the lift cylinders are fully retracted.

   Important: **Release the boom-section lift switch(es) once the outer spray sections have reached the desired position. Running the actuators against the mechanical stops may damage the lift cylinders and/or other hydraulic components.**

   Important: **Ensure that the spray sections do not contact any low overhead objects while in the transport position, this can damage the spray sections.**

   Important: **The spray sections can be damaged by transporting them in any position other than the “X” transport position using the boom transport cradle.**

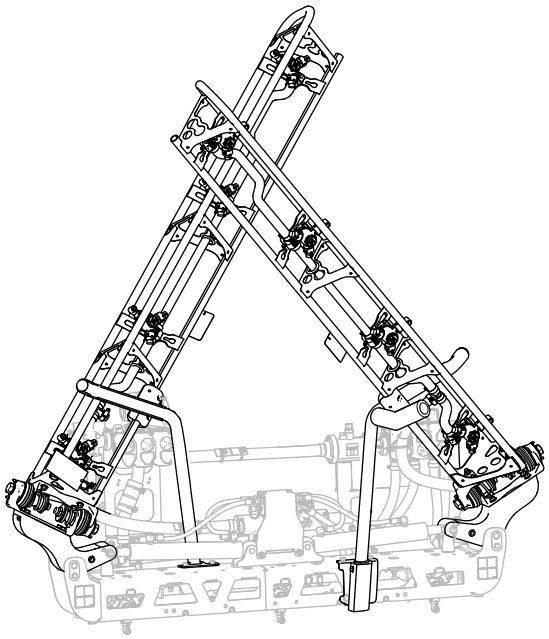

Figure 39
“X” transport position

Important: **To prevent damage to the lift cylinder, ensure that the actuators are fully retracted before transporting the machine.**

Taking Proper Turf Care Precautions while Operating in Stationary Modes

Important: **Under some conditions, heat from the engine, radiator, and muffler can damage grass when operating the sprayer in a stationary mode. Stationary modes include tank agitation, hand spraying with a spray gun, or using a walking boom.**

Use the following precautions:

- **Avoid** stationary spraying when conditions are very hot and/or dry, as turf can be more stressed during these periods.
- **Avoid** parking on the turf while stationary spraying. Park on a cart path whenever possible.
- **Minimize** the amount of time the machine is left running over any particular area of turf. Both time and temperature affect how much the grass may be damaged.
- **Set the engine speed as low as possible** to achieve the desired pressure and flow. This minimizes the heat generated and the air velocity from the cooling fan.
- **Allow heat to escape** upward from the engine compartment by raising the seat assemblies during stationary operation rather than being forced out under the vehicle.

Spraying Tips

- Do not overlap areas that you have previously sprayed.
- Watch for plugged nozzles. Replace all worn or damaged nozzles.
- Use the master section switch to stop the spray flow before stopping the sprayer. Once it stops, use the engine-throttle control to hold the engine speed up to keep the agitation running.
- You will obtain better results if the sprayer is moving when you turn the spray sections on.

Unclogging a Nozzle

If a nozzle becomes clogged while you are spraying, clean the nozzle as follows:

1. Stop the sprayer on a level surface, shut off the engine, and engage the parking brake.
2. Set the master section switch to the OFF position and then set the sprayer-pump switch to the OFF position.
3. Remove the clogged nozzle and clean it using a spray bottle of water and a toothbrush.
4. Install the nozzle.

After Operation

After Operation Safety

General Safety

- Before you leave the operator's position, do the following:
  - Park the machine on a level surface.
  - Move the traction pedal to the NEUTRAL position.
  - Shut off the spray pump.
  - Engage the parking brake.
  - Shut off the engine and remove the key (if equipped).
  - Wait for all movement to stop.
  - Allow the machine to cool before adjusting, servicing, cleaning, or storing it.
- After you finish operating the machine for the day, wash off all chemical residue from the outside of the machine and ensure that the system has been neutralized and triple rinsed according to the recommendations of the chemical manufacturer(s) and that all the valves have been cycled 3 times; refer to Chemical Safety.
- Allow the engine to cool before storing the machine in any enclosure.
- Never store the machine or fuel container where there is an open flame, spark, or pilot light, such as on a water heater or other appliance.
- Keep all parts of the machine in good working condition and all hardware tightened.
- Replace all worn, damaged, or missing decals.

Cleaning the Sprayer

Wash the machine as needed using water alone or with a mild detergent. You may use a rag when washing the machine.

Important: **Do not use brackish or reclaimed water to clean the machine.**

Note: Do not use power-washing equipment to wash the machine. Power-washing equipment may damage the electrical system, loosen important decals, or wash away necessary grease at friction points. Avoid excessive use of water near the control panel, engine, and battery.

Important: **Do not wash the machine with the engine running. Washing the machine with the engine running may result in internal engine damage.**

Cleaning the Sprayer System

Draining the Tank

1. Stop the sprayer, engage the parking brake, shut off the engine, and remove the key.
2. Locate the tank-drain valve at the left, rear fender of the machine (Figure 40).

   Note: The drain valve is attached to the drain-valve bracket that is mounted to the left, rear fender.

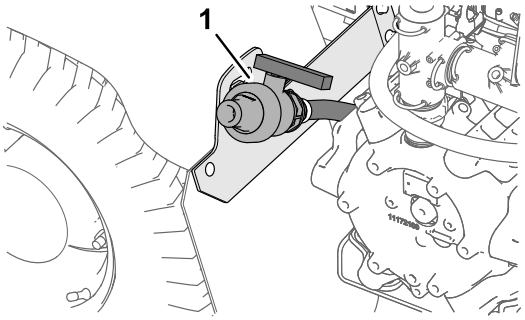

g191084

Figure 40

1. Drain valve (sprayer tank)

3. Lift the valve until the mount studs of the valve clear the slots in the drain-valve bracket, and move the valve rearward (Figure 41A).

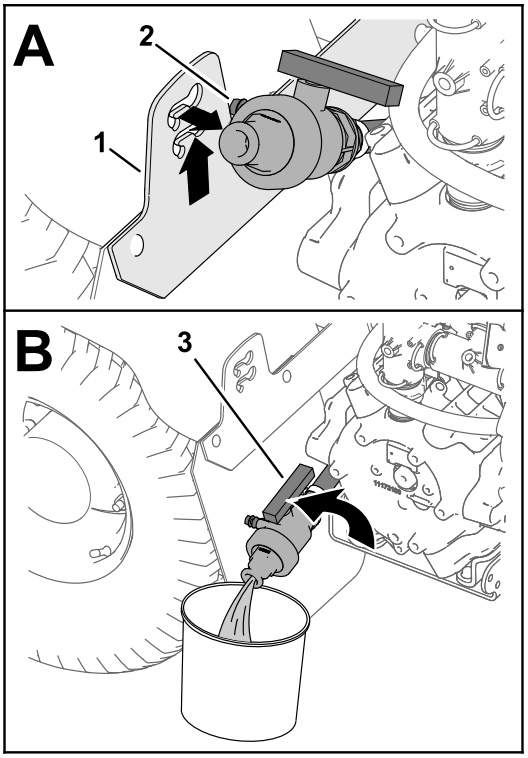

g191083

Figure 41

1. Drain-valve bracket
2. Mount studs (drain valve)
3. Drain valve handle (open position)

4. Align the end of the valve with the drain container and rotate valve handle to the open position (Figure 41B).
5. When the tank has drained completely, rotate the drain-valve handle to the closed position and assemble the valve onto the drain-valve bracket (Figure 41B and Figure 41A).

   Important: **Dispose of the sprayer tank chemicals according to local codes and the material manufacturer's instructions.**

Cleaning Internal Sprayer Components

Important: **Use only clean water when cleaning the sprayer.**

Important: **You must always drain and flush out the sprayer, including any installed spray system accessories immediately after each use. Failure to flush and clean the sprayer may allow the chemicals to dry and obstruct in the lines, filters, valves, nozzle bodies, pump, and other components.**

Toro recommends using the approved Clean Rinse Kit for this machine. Contact your authorized Toro distributor for more information.

Note: The recommendations and instructions that follow assume that the Toro Rinse Kit is not installed.

Clean the spray system and any installed spray accessories after **each** spraying session. To properly clean the spray system, perform the following:

- Complete 3 separate rinse cycles.
- Use the cleaners and neutralizers as recommended by your chemical manufacturers.
- Use pure, clean water (no cleaners or neutralizers) for the **final** rinse.

1. Fill the tank with at least 190 L (50 US gallons) of clean water and close the cover.

   Note: You can use a cleaning/neutralizing agent in the water as needed. On the final rinse, use only clean, clear water.
2. Lower the outer spray sections into the spray position.
3. Start the engine, set the spray pump switch to the ON position, and move the throttle lever to a high-engine speed.
4. Set the agitation switch to the ON position.
5. Use the application-rate switch to increase the pressure to a high setting.
6. Set the individual section switches and master section switch to the ON positions.
7. Check the nozzles to ensure that they are all spraying correctly.
8. Allow all water in the tank to spray out through the nozzles.
9. Set the master section switch to the OFF position, the set the agitation switch and spray-pump switch to the OFF position, and shut off the engine.
10. Repeat steps 1 through 9 at least 2 more times to ensure that the spray system is fully cleaned.

    Important: **You must always complete 3 rinse cycles to ensure that the spray system and spray accessories are fully clean, preventing damage to the system.**

Cleaning External Sprayer Components

1. Clean the suction and pressure filters; refer to Cleaning the Suction Filter (page 39) and Cleaning the Pressure Filter (page 40).

   Important: **If you used wettable powder chemicals, clean the strainer after each tank.**
2. Using a garden hose, rinse off the outside of the sprayer with clean water.
3. Remove the nozzles and clean them by hand.

   Note: Replace damaged or worn nozzles.

   Note: If your machine has optional nozzle filters, clean them before installing the nozzles; refer to Selecting a Nozzle-Tip Filter (Optional) (page 25).

Cleaning the Suction Filter

Service Interval: Before each use or daily—Clean the suction filter. Clean the suction filter (more often when using wettable powders).

1. Park the machine on a level surface, engage the parking brake, shut off the pump, shut off the engine, and remove the key.
2. At the top of the sprayer tank, remove the retainer that secures the hose fitting attached to the large hose from the filter housing (Figure 42).

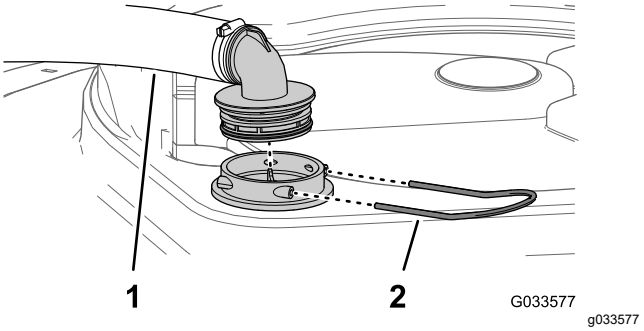

Figure 42

1. Suction hose
2. Retainer

3. Remove the hose and hose fitting from the filter housing (Figure 42).
4. Pull the suction strainer out of the filter housing in the tank (Figure 43).

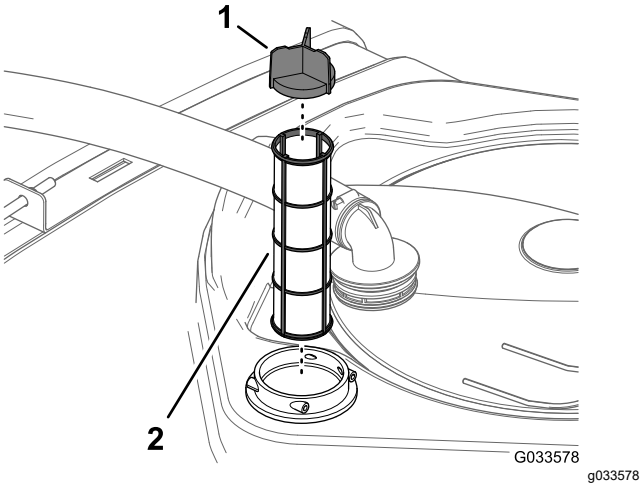

Figure 43

1. Screen vane
2. Suction strainer

5. Clean the suction filter with clean water.

   Important: **Replace the filter if it is damaged or cannot be cleaned.**

6. Insert the suction filter into the filter housing until the filter is fully seated.
7. Align the hose and hose fitting to the filter housing at the top of the tank, and secure fitting and housing with the retainer that you removed in step 2.

Cleaning the Pressure Filter

Service Interval: Before each use or daily—Clean the pressure filter. Clean the pressure filter (more often when using wettable powders).

1. Park the machine on a level surface, engage the parking brake, shut off the sprayer pump, shut off the engine, and remove the key.
2. Align a drain pan under the pressure filter (Figure 44).

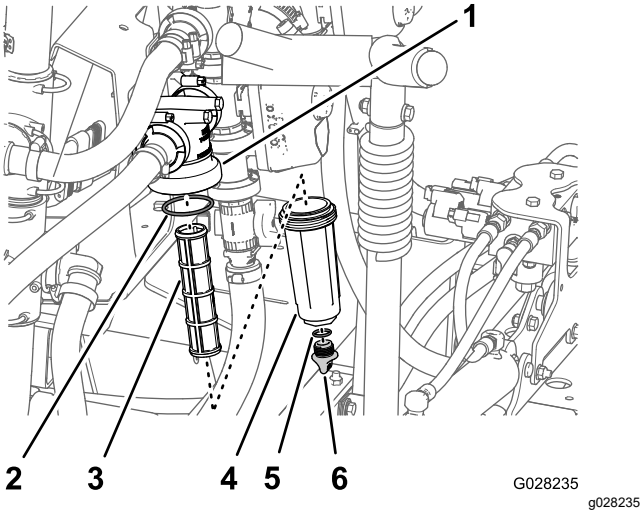

Figure 44

1. Filter head
2. Gasket (bowl)
3. Filter element
4. Bowl
5. Gasket (drain cap)
6. Drain cap

3. Rotate the drain cap counterclockwise and remove it from the bowl of the pressure filter (Figure 44).

   Note: Allow the bowl to drain completely.
4. Rotate the bowl counterclockwise and remove the filter head (Figure 44).
5. Remove the pressure filter element (Figure 44).
6. Clean the pressure filter element with clean water.

   Important: **Replace the filter if it is damaged or cannot be cleaned.**
7. Check the gasket for the drain plug (located inside the bowl) and the gasket for bowl (located inside the filter head) for damage and wear (Figure 44).

   Important: **Replace any damaged or worn gaskets for the plug, bowl, or both.**
8. Install the pressure filter element into the filter head (Figure 44).

   Note: Ensure that the filter element is firmly seated into the filter head.
9. Install the bowl onto the filter head, and tighten by hand (Figure 44).
10. Assemble the drain cap onto the fitting at the bottom of the bowl, and tighten the cap by hand (Figure 44).

Cleaning the Nozzle Filter

1. Park the machine on a level surface, engage the parking brake, shut off the sprayer pump, shut off the engine, and remove the key.
2. Remove the nozzle from the spray turret (Figure 45).

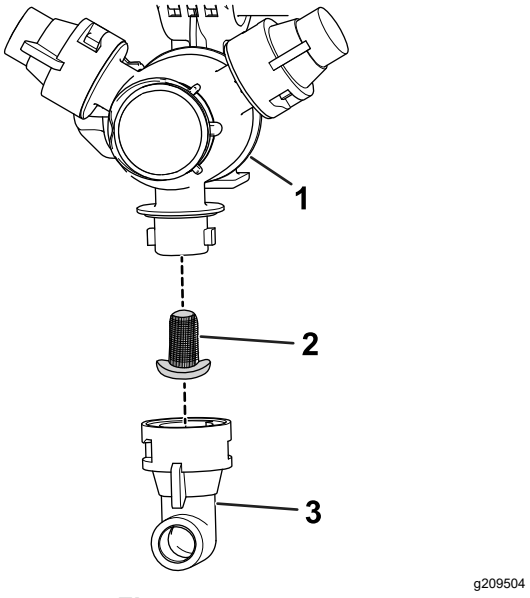

Figure 45

1. Spray turret
2. Nozzle filter
3. Nozzle

3. Remove the nozzle filter (Figure 45).
4. Clean the nozzle filter with clean water.

   Important: **Replace the filter if it is damaged or cannot be cleaned.**
5. Install the nozzle filter (Figure 45).

   Note: Ensure that the filter is fully seated.
6. Install the nozzle onto the spray turret (Figure 45).

Conditioning the Spray System

Service Interval: After each use—Condition the spray system at the end of each daily use.

Conditioner Specification

Conditioner specification: propylene glycol "non-toxic RV antifreeze" with corrosion inhibitor

Important: **Use only propylene glycol with corrosion inhibitor.**

Do not use recycled propylene glycol. Do not use ethylene glycol base antifreeze.

Do not use propylene glycol with soluble alcohols (methanol, ethanol, or isopropanol) or brines added.

Preparing the Conditioner

1. Move the machine to a level surface, set the parking brake, shut off the engine, and remove the key.
2. Add conditioner to the tank as follows:
   - For ready to use (premixed) propylene glycol RV antifreeze—add 10 gallons of propylene glycol RV antifreeze to the tank.
   - For concentrated propylene glycol RV antifreeze, perform the following steps:
     A. Add a 10-gallon mixture of propylene glycol RV antifreeze and water into the sprayer tank. Prepared the antifreeze mixture as instructed manufacturer for a concentration rated for -45°C (-50°F) minimum.

     Important: **Use only clean water when cleaning the sprayer.**

     B. Start the engine and set the spray-pump switch to the ON position.

     C. Press the accelerator pedal to increase the engine speed.

     D. Set the agitation switch to the ON position.

     Allow the conditioner and water solution to circulate for 3 minutes or longer.

Spraying the Conditioner

Recommended tool: a clear catch container.

1. Move the machine to the drain pad area and set the parking brake.
2. Lower the outer booms sections.
3. Set the left, center, and right section switches and the master section switch to the ON position.
4. Allow the spray system to spray until the nozzles discharge the conditioner.

   Note: Most propylene glycol RV antifreeze is colored pink. Use the catch container to sample the sprayer discharge at several of the nozzles.
5. Shut off the master section switch, 3 section switches, agitation switch, spray-pump switch, and engine.

Hauling the Machine

Use a trailer or truck when moving the machine long distances.

- Use full-width ramps for loading the machine onto a trailer or truck.
- Tie outer spray sections to the boom-section transport cradles.
- Bind the machine securely to the transport vehicle; Figure 46 and Figure 47 illustrate the tie-down points of the machine.

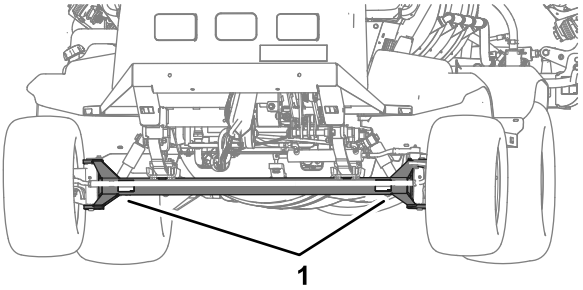

Figure 46

1. Front tie-down points (front axle)

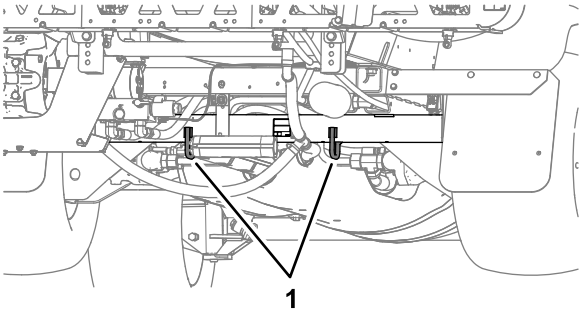

Figure 47

1. Rear tie-down loop (rear axle tube)

Towing the Sprayer

In case of an emergency, the sprayer can be towed for a short distance after you open the tow valve. However, we do not recommend this as a standard procedure.

⚠ WARNING

Towing at excessive speeds could cause a loss of steering control, resulting in personal injury.

Never tow the sprayer at faster than 4.8 kph (3 mph).

Towing the sprayer is a 2-person job. If the machine must be moved a considerable distance, transport it on a truck or trailer; refer to Hauling the Machine (page 41).

1. Allow the exhaust system to cool completely.
2. Remove the undercarriage shroud; refer to Accessing the Engine (page 47).
3. Rotate the tow valve (Figure 48) 90° in either direction to open the tow valve.

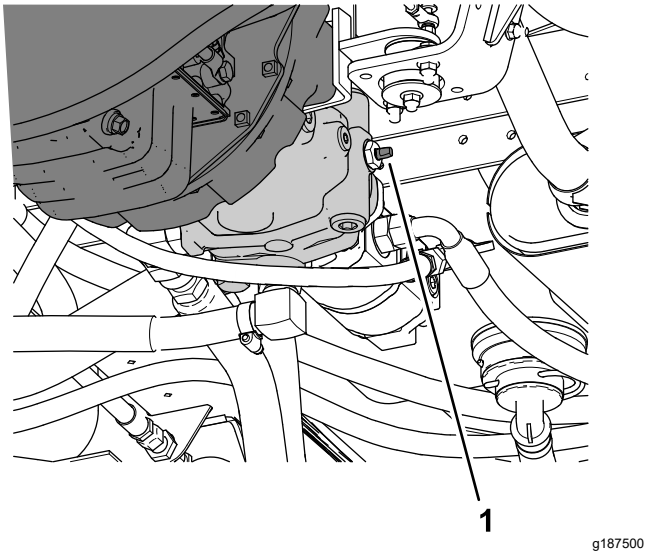

Figure 48

1. Tow valve

Important: **If you do not open the tow valve before towing the sprayer, you will damage the transmission.**

4. Affix a tow line to the frame; refer to the front and rear towing points (Figure 49 and Figure 50).

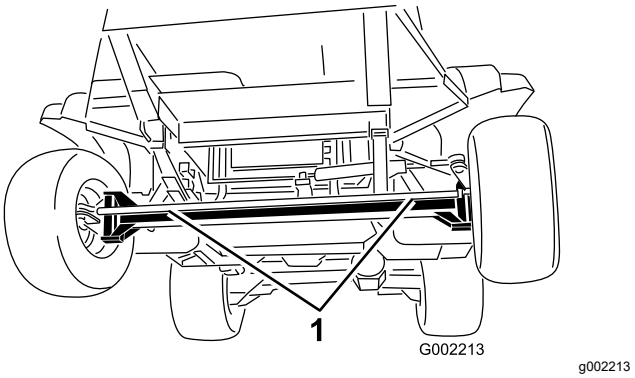

Figure 49

1. Front towing points

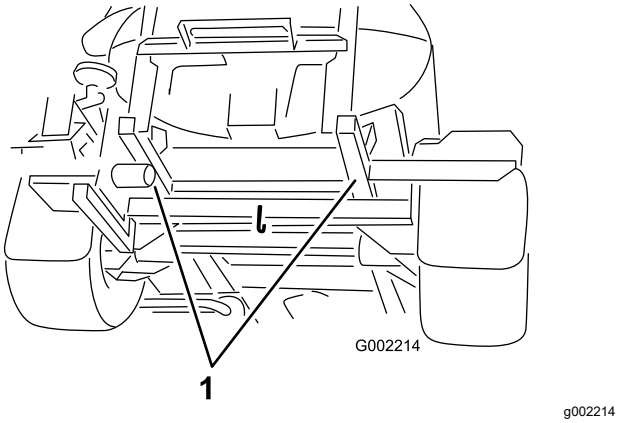

Figure 50

1. Rear towing points

5. Release the parking brake.
6. Tow the sprayer at less than 4.8 kph (3 mph).
7. When finished, close the tow valve and torque it to 7 to 11 N·m (5 to 8 ft-lb).

Important: **Before returning the machine to service, install the undercarriage shroud; refer to Accessing the Engine (page 47).**

Maintenance

Note: Download a free copy of the electrical or hydraulic schematic by visiting www.Toro.com and searching for your machine from the Manuals link on the home page.

Important: **Refer to your engine owner's manual for additional maintenance procedures.**

Note: Determine the left and right sides of the machine from the normal operating position.

Maintenance Safety

- Before you leave the operator's position, do the following:
  - Park the machine on a level surface.
  - Move the traction pedal to the NEUTRAL position.
  - Engage the parking brake.
  - Shut off the engine and remove the key (if equipped).
  - Wait for all movement to stop.
- Allow machine components to cool before performing maintenance.
- Allow only qualified and authorized personnel to maintain, repair, adjust, or inspect the machine.
- Before performing any maintenance, thoroughly clean and rinse the sprayer; refer to Chemical Safety.
- Chemicals used in the sprayer system may be hazardous and toxic to you, bystanders, animals, plants, soils, or other property.
  - Carefully read and follow the chemical warning labels and safety data sheets (SDSs) for all chemicals used, and protect yourself according to the chemical manufacturer's recommendations.
  - Always protect your skin while you are near chemicals. Use the appropriate personal protective equipment (PPE) to guard against contact with chemicals, including the following:
    - ◊ safety glasses, goggles, and/or face shield
    - ◊ a chemical suit
    - ◊ a respirator or filter mask
    - ◊ chemical-resistant gloves
    - ◊ rubber boots or other substantial footwear
    - ◊ a clean change of clothes, soap, and disposable towels for cleanup
  - Refuse to operate or work on the sprayer if chemical safety information is not available.
  - Do not fill, calibrate, or clean the machine while people, especially children, or pets are in the area.
  - Handle chemicals in a well-ventilated area.
  - Have clean water available, especially when filling the spray tank.
  - Do not eat, drink, or smoke while working near chemicals.
  - Do not clean spray nozzles by blowing through them or placing them in your mouth.
  - Always wash your hands and other exposed areas as soon as possible after working with chemicals.
  - Chemicals and fumes are dangerous; never enter the tank or place your head over or in the opening of a tank.
- To ensure that the entire machine is in good condition, keep all hardware properly tightened.
- To reduce the potential for fire, keep the engine area free of excessive grease, chemicals, grass, leaves, and dirt.
- If you must run the engine to perform a maintenance adjustment, keep your hands, feet, clothing, and any parts of your body away from the engine and any moving parts. Keep everyone away.
- Do not adjust the ground speed of the machine. To ensure safety and accuracy, have an authorized Toro distributor check the ground speed.
- If the machine requires a major repair or you need technical help, contact an authorized Toro distributor.
- Modifying this machine in any manner may affect machine operation, performance, durability, or its use, and result in injury or death. Such use could void the product warranty.
- Support the machine with jack stands whenever you work under the machine.
- Carefully release pressure from components with stored energy.

Recommended Maintenance Schedule(s)

Maintenance Service Interval	Maintenance Procedure
After the first 8 hours	• Torque the wheel-lug nuts. • Check the fan/alternator belt.
After the first 50 hours	• Change the engine oil filter. • Change the engine oil (including synthetic oil). • Check the fuel lines and connections. • Change the planetary-gear-drive lubricant.
After the first 100 hours	• To provide proper performance and long sprayer life, follow these guidelines for the first 100 operating hours:
After the first 200 hours	• Pack the front wheel bearings.
Before each use or daily	• Inspect the seat belt(s) for wear, cuts, and other damage. Replace the seat belt(s) if any component does not operate properly. • Check the tire air pressure. • Check the brakes. • Check the tank straps. • Clean the suction filter. • Clean the pressure filter. • Check the air cleaner. • Check the engine oil. • Check the coolant level. • Check the hydraulic-fluid level.
After each use	• Clean the sprayer. • Condition the spray system at the end of each daily use.
Every 50 hours	• Lubricate the pump. • Lubricate all grease fittings. • Grease the steering and suspension. • Grease the steering and suspension. • Check the battery-cable connections.
Every 100 hours	• Lubricate the boom hinges. • Replace the air-filter element. • Torque the wheel-lug nuts. • Inspect the condition and wear of the tires. • Check the fan/alternator belt.
Every 200 hours	• Change the engine oil filter. Change the filter more often when operating the machine under heavy load or in high temperatures. • Change the engine oil (including synthetic oil). Change the oil more often when operating the machine under heavy load or in high temperatures. • Check front wheel toe-in. • Inspect all hoses and connections for damage and proper attachment. • Clean the radiator fins. • Clean the flow meter (more often when using wettable powders).

Maintenance Service Interval	Maintenance Procedure
Every 400 hours	• Grease the actuator-rod bearings. • Perform yearly engine maintenance. • Check the fuel lines and connections. • Drain and clean the fuel tank. • Pack the front wheel bearings. • Check the planetary-gear-drive lubricant. • Check the coolant (as directed by the manufacturer) and change if necessary. • Inspect the O-rings in the valve assemblies and replace them if necessary. • Change the suction filter. • Change the pressure filter. • Inspect the nylon pivot bushings. • Inspect the pump diaphragms and replace if necessary (see an authorized Toro distributor). • Inspect the pump check valves and replace if necessary (see an authorized Toro distributor).
Every 800 hours	• Service the fuel filter. • Change the planetary-gear-drive lubricant. or yearly, whichever comes first. • If you are not using the recommended hydraulic fluid or have ever filled the reservoir with an alternative fluid, replace the hydraulic filter. • If you are not using the recommended hydraulic fluid or have ever filled the reservoir with an alternative fluid, change the hydraulic fluid.
Every 1,000 hours	• Check the PCV valve. • If you are using the recommended hydraulic fluid, replace the hydraulic filter.
Every 2,000 hours	• If you are using the recommended hydraulic fluid, change the hydraulic fluid.
Yearly	• Calibrate the agitation-bypass valve.

Daily Maintenance Checklist

Duplicate this page for routine use.

Maintenance Check Item	For the week of:						
	Monday	Tuesday	Wednesday	Thursday	Friday	Saturday	Sunday
Check the brake and parking-brake operation.							
Check the neutral-lockout-switch operation.							
Check the fuel level.							
Check the engine-oil level.							
Check the hydraulic-fluid level.							
Check the coolant level.							
Inspect the air filter.							
Inspect the radiator and oil cooler for debris.							
Check for any unusual engine noises.							
Check for any unusual operating noises.							
Check the tire air pressure.							
Check for fluid leaks.							
Check all hydraulic and fluid hoses for damage, kinks, or wear.							
Check the instrument operation.							
Check the accelerator operation.							
Clean the suction strainer.							
Lubricate all grease fittings[1]							
Wash the machine.							
Touch up any damaged paint.							

[1]Immediately after **every** washing, regardless of the interval listed

Notation for Areas of Concern

Inspection performed by:		
Item	**Date**	**Information**
1		
2		
3		
4		
5		
6		
7		
8		
9		
10		

Pre-Maintenance Procedures

⚠ CAUTION

If you leave the key in the starter switch, someone could accidently start the engine and seriously injure you or other bystanders.

Remove the key from the starter switch before you do any maintenance.

Raising the Sprayer

Whenever running the engine for routine maintenance and/or engine diagnostics, the rear wheels of the sprayer should be 25 mm (1 inch) off the ground with the rear axle supported on jack stands.

⚠ DANGER

A sprayer on a jack may be unstable and slip off the jack, injuring anyone beneath it.

- **Always remove the key from the starter switch before getting off the sprayer.**
- **Block the tires when the sprayer is on a jack.**
- **Support the machine with jack stands.**

The jacking point at the front of the sprayer is under the front axle, directly under the leaf springs (Figure 51).

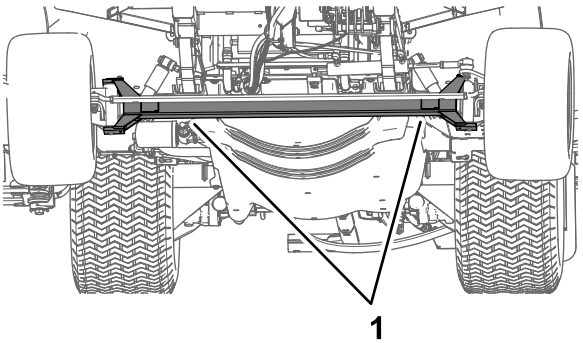

Figure 51

1. Front jacking points

The jacking point at the rear of the sprayer is on the rear side where the boom supports are located (Figure 52).

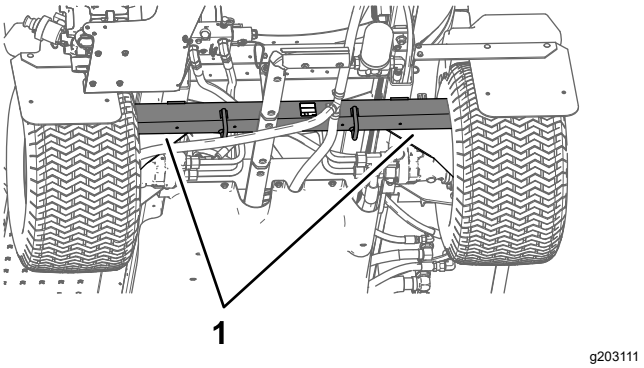

Figure 52

1. Rear jacking points

Accessing the Engine

Removing the Forward Heat Shield

1. Engage the parking brake, shut off the spray pump, shut off the engine, and remove the key.
2. Raise the front and back of the machine and support it with jack stands.
3. Remove the 6 hex-head bolts and 6 washers that secure the front, forward heat shield to the chassis and remove the shield.

   Note: Retain the bolts, washers, and heat shield.

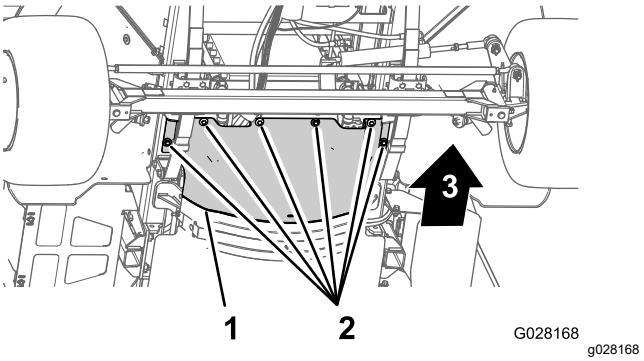

Figure 53

1. Forward heat shield
2. Hex-head bolts and washers
3. Front of the machine

Installing the Forward Heat Shield

1. Align the rear flange of the forward heat shield over the forward flange of the rear heat shield.
2. Align the holes in the forward heat shield with the threaded holes in the chassis.

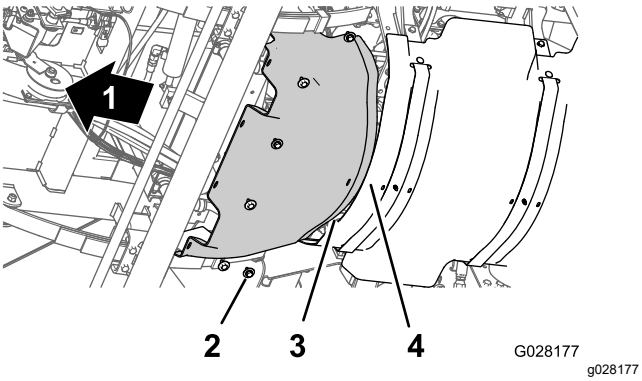

Figure 54

1. Front of the machine
2. Bolts
3. Rear flange
4. Forward flange

3. Assemble the forward heat shield to the machine with the previously removed hardware.
4. Torque the bolts to 1978 to 2542 N·cm (175 to 115 in-lb).
5. Remove the jack stands and lower the machine.

Removing the Undercarriage Shroud

1. Remove the hardware that secures the rear of the undercarriage shroud to the chassis of the machine.

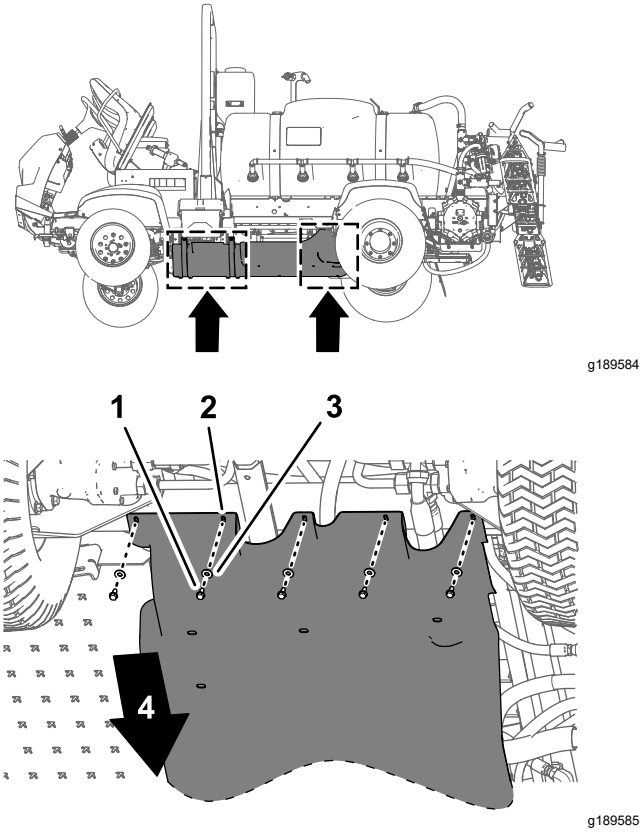

Figure 55

1. Flange-head bolts (5/16 x 7/8 inch)
2. Undercarriage shroud
3. Washers (5/16 inch)
4. Front of the machine

2. Remove the 4 flange locknuts (5/16 inch) from the bolts and carriage bolt that secure the mounting tabs of the undercarriage shroud to the engine-mount brackets of the machine.

   Note: Do not remove the bolts from the machine. Retain the flange locknuts.

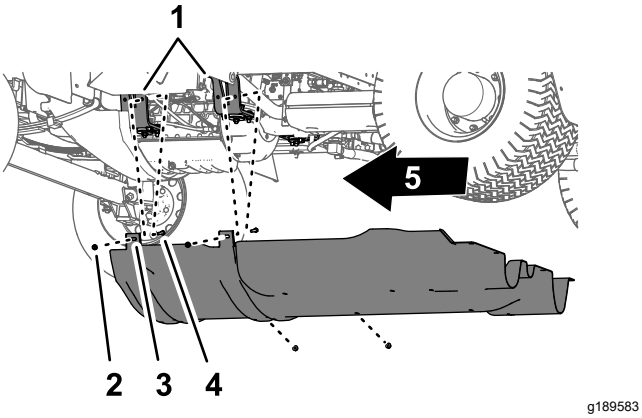

Figure 56

1. Engine mount
2. Bolt—shown for clarity; do not remove
3. Mounting tabs (undercarriage shroud)
4. Flange locknuts (5/16 inch)
5. Front of the machine

3. Move the mounting tabs off the bolts that secure the undercarriage shroud to the engine-mount brackets.

Installing the Undercarriage Shroud

1. Align the undercarriage shroud to the bottom chassis of the machine.
2. Move the mounting tabs of the undercarriage shroud over the bolts and carriage bolt at the engine-mount brackets of the machine.
3. Assemble the undercarriage shroud to the engine-mount brackets and bolts with the previously removed 4 flange locknuts (5/16 inch).
4. Align the holes in the rear part of the undercarriage shroud with the holes in the chassis.
5. Assemble the rear part of the undercarriage shroud to the chassis with the previously removed 5 flange-head bolts (5/16 x 7/8 inch) and 5 washers (5/16 inch).
6. Torque the nuts and bolts to 1129 to 1582 N·cm (100 to 140 in-lb).

Removing the Seat-Base-Access Panel

1. Remove the 2 flanged-head bolts that secure the seat-base-access panel to the seat base.

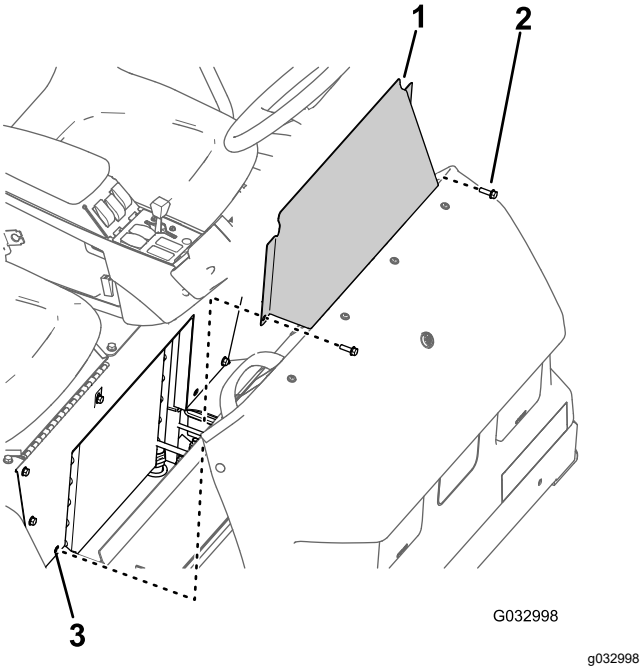

Figure 57

1. Seat-base-access panel
2. Flanged-head bolt
3. Hole (seat base)

2. Remove the seat-base-access panel from the machine.

Installing the Seat-Base-Access Panel

1. Align the holes in the seat-base-access panel with the holes in the seat base.
2. Assemble the seat-base-access panel to the seat base with the previously removed 2 flanged-head bolts .

   Torque the bolts to 1975 to 2542 N·cm (175 to 225 in-lb).

Lubrication

Greasing the Spray Pump

Service Interval: Every 50 hours—Lubricate the pump.

Every 50 hours/Yearly (whichever comes first)

Grease Type: Mobil XHP 461.

1. Wipe the 2 remote grease fitting clean (Figure 58).

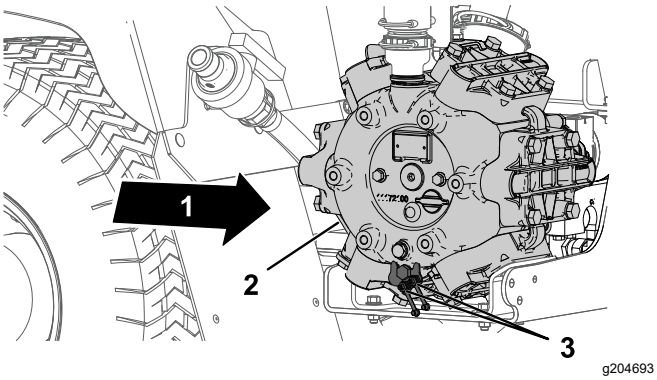

Figure 58

1. Back of the machine
2. Spray pump
3. Grease point (2)

2. Pump grease into the remote grease fitting (Figure 58).
3. Wipe off the excess grease.

Greasing the Steering and Suspension

Service Interval: Every 50 hours—Grease the steering and suspension.

Every 50 hours/Yearly (whichever comes first)

Grease Type: No. 2 lithium grease. Toro Premium All-Purpose Grease is available from your authorized Toro distributor.

- Steering cylinder—2 grease fittings at each rod end of the cylinder
- Steering rod—2 grease fittings at each rod end
- Spindle pivot—2 grease fittings at each side of the machine

1. Wipe the grease fittings clean (Figure 59 and Figure 60).
2. Pump grease into the grease fittings (Figure 59 and Figure 60).
3. Wipe off excess grease.

Note: The grease fittings positions are illustrated in Figure 59.

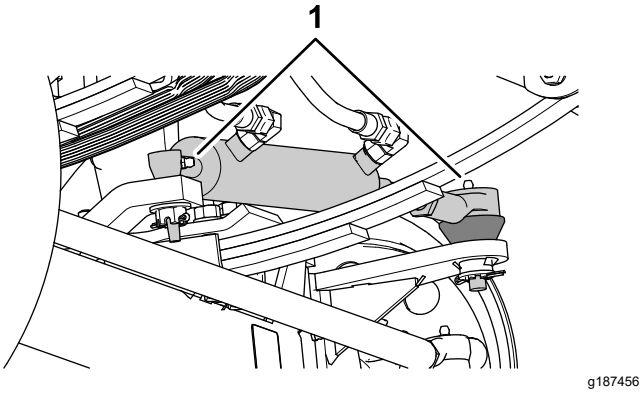

Figure 59

1. Grease fitting

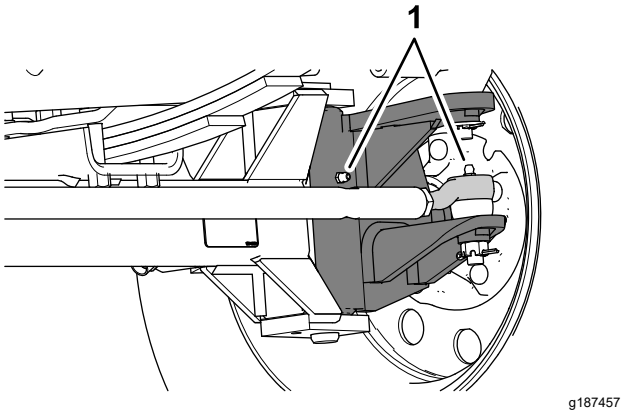

Figure 60

There are 2 fittings at each front wheel.

1. Grease fittings

Greasing the Boom Hinges

Service Interval: Every 100 hours

Important: **If you wash the boom hinges with water, remove all water and debris from the hinge assembly and apply fresh grease.**

Grease Type: No. 2 lithium grease.

1. Wipe the grease fittings clean so that foreign matter cannot be forced into the bearing or bushing.
2. Pump grease into the bearing or bushing at each fitting (Figure 61).

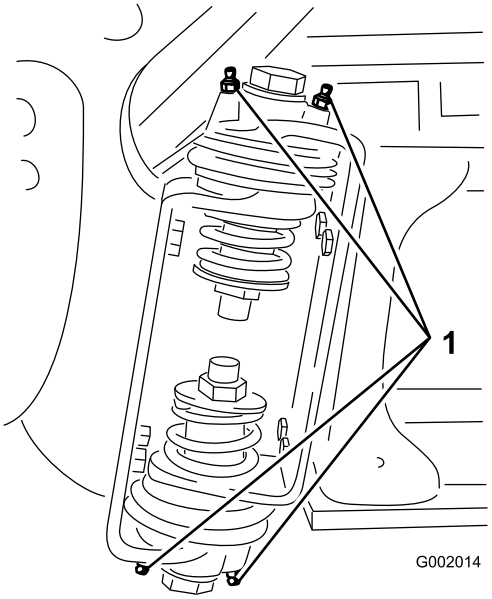

g002014

Figure 61
Right Boom

1. Grease fitting

3. Wipe off excess grease.
4. Repeat the procedure for each boom pivot.

Greasing the Actuator-Rod Bearings

Service Interval: Every 400 hours/Yearly (whichever comes first)

Grease Type: No. 2 lithium grease.

1. Lower the outer spray sections to the spray position.
2. Remove the hairpin from the clevis pin (Figure 62).
3. Lift up on the section, remove the clevis pin, and slowly lower the section to the ground (Figure 62).
4. Inspect the clevis pin for damage, and replace it if necessary.

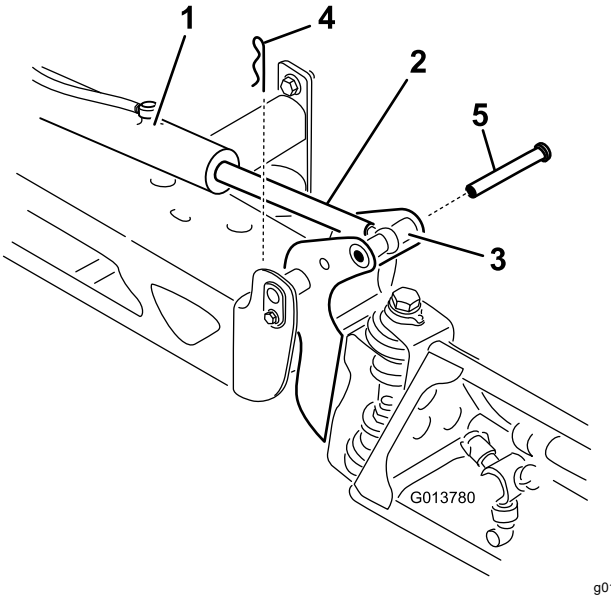

g013780

Figure 62

1. Actuator
2. Actuator rod
3. Boom-pivot-pin housing
4. Hairpin
5. Clevis pin

5. Swivel the rod-end bearing and apply grease into the bearing (Figure 63).

   Note: Wipe off excess grease.

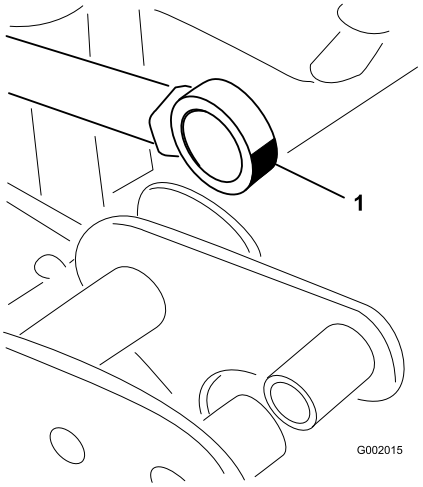

g002015

Figure 63
Right Boom

1. Grease the rod-end bearing

6. Lift the spray section to align the pivot with the actuator rod.
7. While supporting the spray section, insert the clevis pin through both boom pivot and actuator rod (Figure 62).
8. With the pin in place, release the spray section and secure the clevis pin with the hairpin removed previously.

9. Repeat steps 2 through 8 to the actuator-rod bearing at the other side of the machine.

Engine Maintenance

Engine Safety

Shut off the engine before checking the oil or adding oil to the crankcase.

Checking the Air Cleaner

Service Interval: Before each use or daily Service the air cleaner more frequently if operating conditions are extremely dusty or sandy.

1. Engage the parking brake, shut off the spray pump, shut off the engine, and remove the key.
2. Tilt the passenger seat forward and align the prop rod into the detent in the prop-rod-guide slot.
3. Clean the dust cap and air-cleaner body (Figure 64).

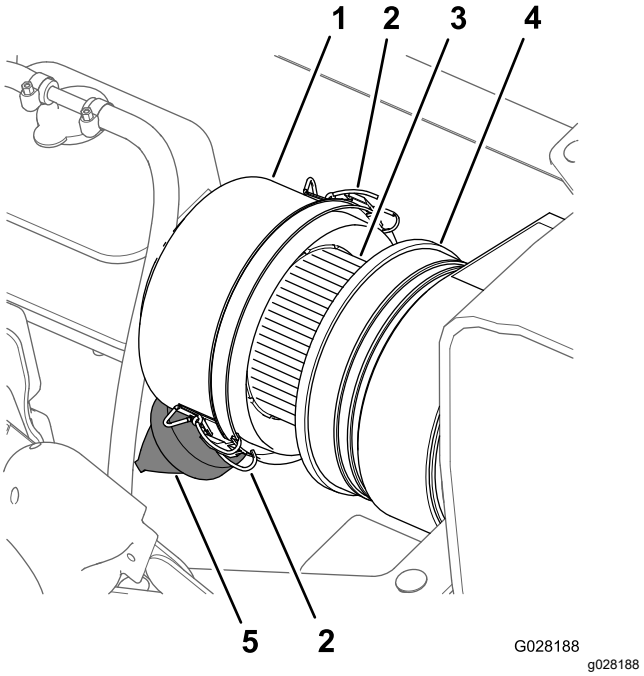

Figure 64

1. Dust cap
2. Latch (dust cap)
3. Air-filter element
4. Air-cleaner body
5. Dust valve

4. Check the air-cleaner body for damage that could cause an air leak (Figure 64).

   Note: Replace the dust cap and air-cleaner body if either is damaged.
5. Squeeze the dust valve to clear it of dirt, dust, and debris (Figure 64).
6. Loosen the 2 latches that secure the dust cap to the air-cleaner body.

7. Check the air-filter element for excessive accumulation of dust, dirt, and debris (Figure 64).

   Note: Do not clean the air-filter element if it is dirty; replace the air-filter element if it is dirty.

8. Install the dust cap onto the air-cleaner body and secure the cap with the 2 latches (Figure 64).

   Note: Ensure that the dust valve aligns between the 5 to 7 o'clock position when viewed from the end.

9. Lower the passenger seat.

Replacing the Air-Filter Element

Service Interval: Every 100 hours Replace the air-filter element more often in dusty, dirty conditions.

1. If you are installing a new filter, inspect the new air-filter element for shipping damage, including the sealing end of the filter.

   Important: **Do not install a damaged filter.**

2. Clean the dust cap and air-cleaner body (Figure 64).
3. Lift the coolant-overflow tank up and off the tank-support bracket (Figure 65).

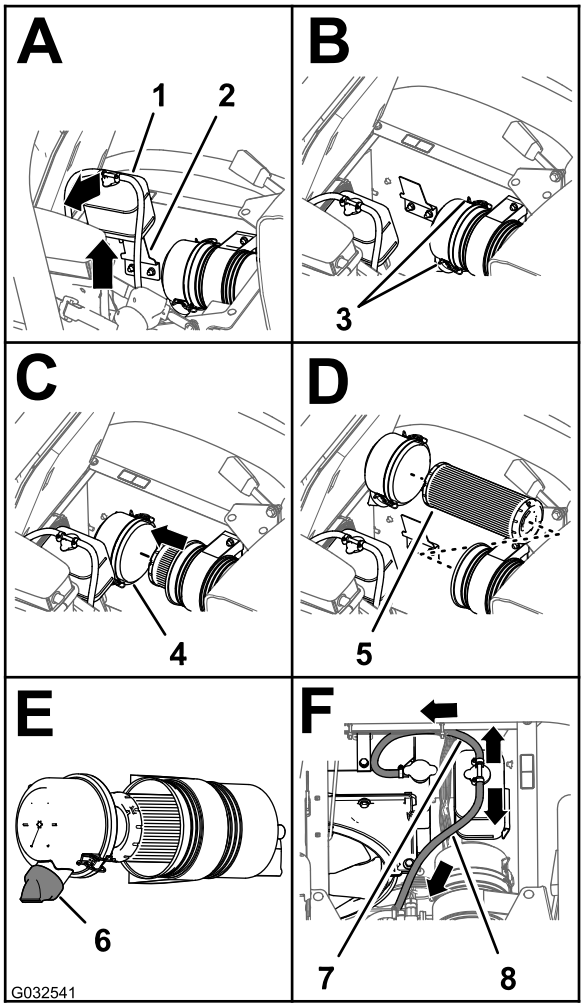

Figure 65

1. Coolant-overflow tank
2. Tank-support bracket
3. Latch (dust cap)
4. Dust cap
5. Air-filter element
6. Dust valve (5 to 7 o'clock position)
7. Pressure-relief hose
8. Tank-vent hose

4. Loosen the 2 latches that secure the dust cap to the air-cleaner body (Figure 65).
5. Gently slide the old filter element out of the air-cleaner body to reduce the amount of dust dislodged.

   Note: Avoid knocking the filter element against the air-cleaner body.

6. Clean the inside of the dust cap, air-cleaner body, and dust valve with a damp rag (Figure 64 and Figure 65).
7. Insert the air-filter element into the air-cleaner body (Figure 65).

   Note: Ensure that the filter is seated in the air-cleaner body properly by applying pressure to the outer rim of the filter element when you install it. Do not press on the flexible center part of the filter.

8. Install the cover onto the air-cleaner body and secure the cover with the 2 latches (Figure 65).

   Note: Ensure that the dust valve is aligned between the 5 to 7 o'clock position when viewed from the end (Figure 65).

9. Align the coolant-overflow tank to the tank-support bracket and seat the tank firmly (Figure 65).

   Important: **Ensure that the pressure-relief hose is routed forward and down, and the tank-vent hose is routed rearward as shown in Figure 65.**

10. Lower the passenger seat.

Engine-Oil Specification

- **Oil type:** API service classification SL or higher.
- **Oil viscosity:** refer to the engine oil viscosity table below.

Engine Oil Viscosity Table

Ambient temperature range	Oil viscosity
Above 25°C (77°F)	SAE30, SAE10W-30, or SAE15W-40
0°C to 25°C (32°F to 77°F)	SAE20 or SAE10W-30
0°C to 20°C (32°F to -4°F)	SAE10W or SAE10W-30

Toro Premium Engine Oil is available from your distributor in either 15W40 or 10W30 viscosity. Refer to the *Parts Catalog* for part numbers.

Checking the Engine Oil

Service Interval: Before each use or daily Check the engine oil level before you start the engine for the first time.

Note: The best time to check the engine oil is when the engine is cool, before it has been started for the day. If the engine was operated, allow the oil to drain back down to the sump for at least 10 minutes before checking.

The engine is shipped with oil in the crankcase; however, the level of oil must be checked before you first start the engine and after you have run it.

1. Position the machine on a level surface.
2. Remove the dipstick, located under the passenger seat, and wipe it with a clean rag (Figure 66).

   Note: Insert the dipstick into the tube and make sure it is seated fully. Remove the dipstick and check the oil level.

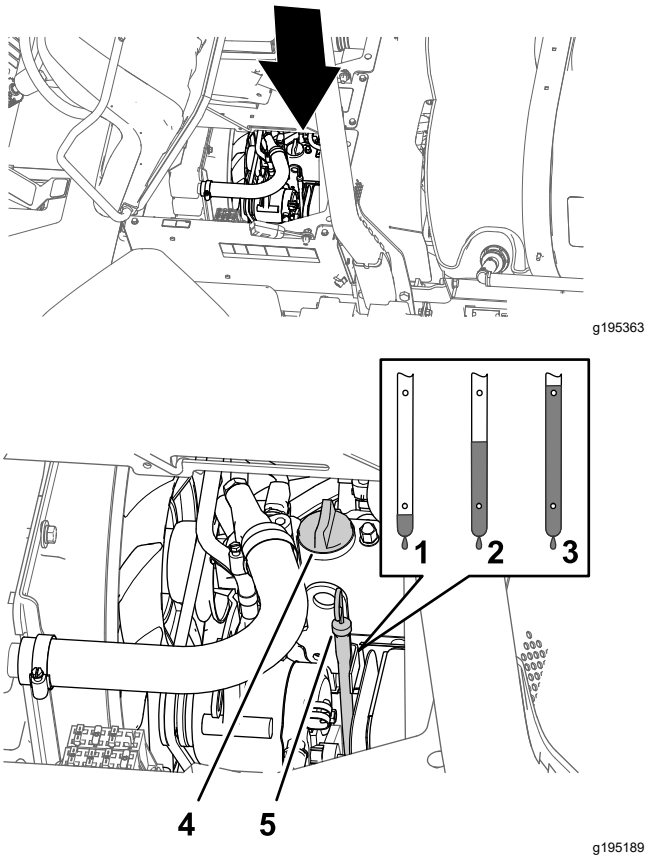

Figure 66

1. Low
2. Full
3. High
4. Oil-filler cap
5. Dip stick

3. If the oil level is low, remove the filler cap from the valve cover (Figure 66) and pour oil into the filler neck until the oil level is up to the Full mark on the dipstick.

   Note: Add the oil slowly and check the level often during this process. Do not overfill.

4. Install the oil-filler cap (Figure 66).
5. Install the dipstick firmly in place (Figure 66).

Changing the Engine Oil Filter

Service Interval: After the first 50 hours

Every 200 hours Change the filter more often when operating the machine under heavy load or in high temperatures.

1. Remove the forward heat shield; refer to Accessing the Engine (page 47).
2. Raise the seats.

⚠ CAUTION

Components under the seat will be hot if the sprayer has been running. If you touch hot components, you may be burned.

Allow the sprayer to cool before performing maintenance or touching components under the hood.

3. Align a drain pan under the engine oil filter (Figure 67).

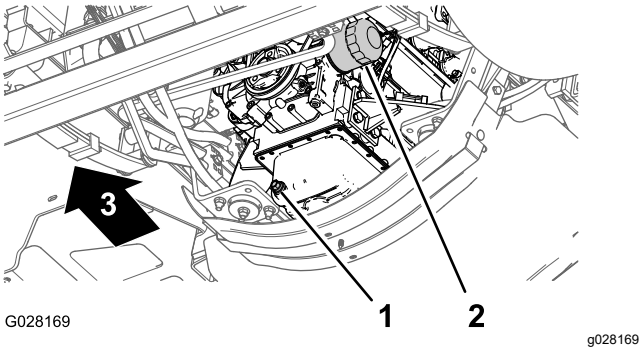

Figure 67

1. Drain plug
2. Engine oil filter

4. Remove the old oil filter (Figure 67).

   Note: Dispose of the used oil filter at a certified recycling center.

5. Wipe clean the surface of the oil filter adapter of the engine with a rag.
6. Fill the oil filter with the specified oil.

   Note: Allow the filter element to saturate with oil.

7. Apply a thin coat of the specified oil to the rubber gasket on the replacement oil filter.
8. Install the oil filter to the filter adapter and turn the oil filter clockwise until the rubber gasket contacts the filter adapter, then tighten the filter an additional 1/2 turn (Figure 67).

   Note: Do not overtighten the oil filter.

9. Wipe clean any residual oil.

Engine-Oil Quantity

5.1 L (5.4 US qt) with the filter; refer to Engine-Oil Specification (page 54)

Changing the Engine Oil

Service Interval: After the first 50 hours

Every 200 hours Change the oil more often when operating the machine under heavy load or in high temperatures.

1. Align a drain pan under the drain plug (Figure 67).
2. Remove the drain plug (Figure 67) and allow the oil to drain completely.

   Note: Check the drain plug seal for wear and damage; replace the seal if it is worn or damaged.

   Note: Dispose of the used oil at a certified recycling center.

3. Install the drain plug into the drain port of the engine oil pan and tighten the plug to 33 to 37 N·m (24 to 27 ft-lb).
4. Tilt the passenger seat forward and align the prop rod into the detent in the prop-rod-guide slot.
5. Remove the oil-filler cap from the filler neck of the valve cover of the engine (Figure 68) and slowly pour approximately 80% of the specified amount of oil into the filler neck.

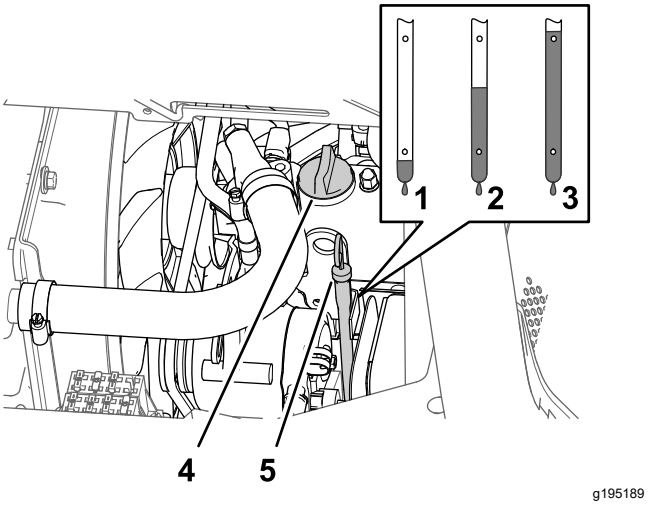

Figure 68

1. Low
2. Full
3. High
4. Oil-filler cap
5. Dipstick

6. Remove the dipstick and check the oil level in the engine (Figure 68).
7. Slowly add additional specified oil to bring the oil level to the full mark on the dipstick (Figure 68).

   Important: **Overfilling the engine with oil may cause damage to the engine.**

8. Install the oil-filler cap into the filler neck and the dipstick into the dipstick tube (Figure 68).
9. Start the engine and check for oil leaks.
10. Shut off the engine, wait 2 to 3 minutes, remove the dipstick, and check the oil level in the engine.

    Note: If needed, remove the oil-filler cap, add the specified oil to bring the oil level to the full mark on the dipstick, and install the oil-filler cap.
11. Install the dipstick, engine heat shield, and tilt the seats down.

Checking the PCV Valve

Service Interval: Every 1,000 hours

1. Tilt the driver's seat forward and align the prop rod into the detent in the prop-rod-guide slot.
2. Remove the PCV valve from the fitting of the valve cover (Figure 69).

   Note: Do not separate the hose from the PCV valve.

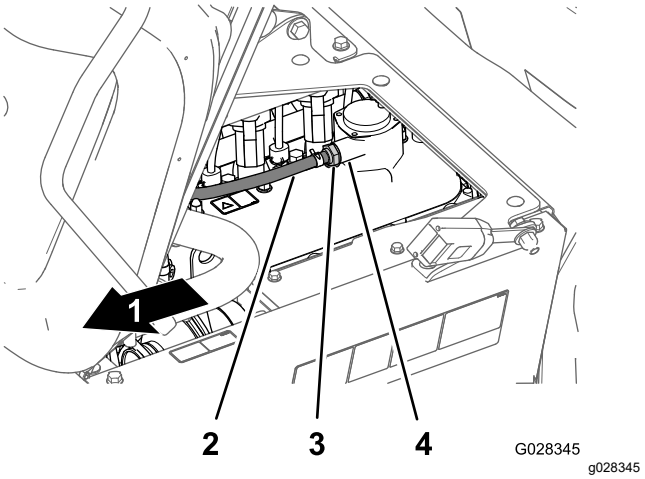

Figure 69

1. Front of the machine
2. Hose (crankcase ventilation)
3. PCV valve
4. Valve-cover fitting

3. Shake the PCV valve.

   Note: If the internal restrictor of the valve rattles, the PCV valve is serviceable; if the internal restrictor is not free to rattle when shaken, replace the PCV valve (Figure 69).
4. Insert the PCV valve until it is fully seated in the seal for the valve-cover fitting (Figure 69).
5. Lower the operator's seat.

Performing Yearly Engine Maintenance

Service Interval: Every 400 hours/Yearly (whichever comes first)

Complete all yearly maintenance procedures specified in the **engine owner's manual.**

Fuel System Maintenance

⚠ DANGER

Under certain conditions, fuel and fuel vapors are highly flammable and explosive. A fire or explosion from fuel can burn you and others and can cause property damage.

- **Use a funnel and fill the tank outdoors, in an open area, when the engine is off and is cold. Wipe up any spilled fuel.**
- **Do not fill the fuel tank completely full. Add fuel to the fuel tank until the level is 25 mm (1 inch) below the bottom of the filler neck. This empty space in the tank allows the fuel to expand.**
- **Never smoke when handling fuel, and stay away from an open flame or where fuel fumes may be ignited by a spark.**
- **Store fuel in a clean, safety-approved fuel container and keep the cap in place.**

Checking the Fuel Line and Connections

Service Interval: After the first 50 hours

Every 400 hours/Yearly (whichever comes first)

Inspect the lines and fittings for deterioration, damage, or loose connections.

Note: If you find any fuel leaks, repair the fuel component(s) before operating the machine.

Bleeding the Fuel System

Use this procedure after you have serviced the fuel filter or ran the engine out of fuel, and the engine does not start.

1. Ensure that you have 1/2 tank of fuel in the fuel tank.
2. Insert the key into the starter switch and rotate it to the ON position.
3. Rotate the key to the OFF position.
4. Attempt to start the engine.
5. If the engine does not start, repeat steps 2 and 3 several times and then attempt to start the engine.

   Note: Repeat step 5 until the engine starts.

Servicing the Fuel Pump

Service Interval: Every 800 hours

Removing the Fuel Pump Cover

1. Engage the parking brake, stop the spray pump, stop the engine, and remove the key.
2. At the fuel tank, remove the 4 screws (#10 x 3/4 inch) that secure the cover to the top of the fuel tank, and remove the cover (Figure 70).

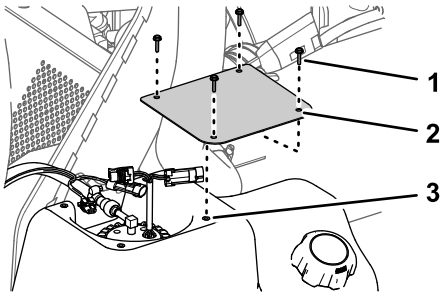

g323402

Figure 70

1. Screws (#10 x 3/4 inch)
2. Cover
3. Fuel tank

Removing the Carbon Canister

1. Engage the parking brake, stop the spray pump, stop the engine, and remove the key.
2. At the fuel tank, remove the 4 screws (#10 x 3/4 inch) that secure the carbon-canister bracket to the top of the fuel tank.

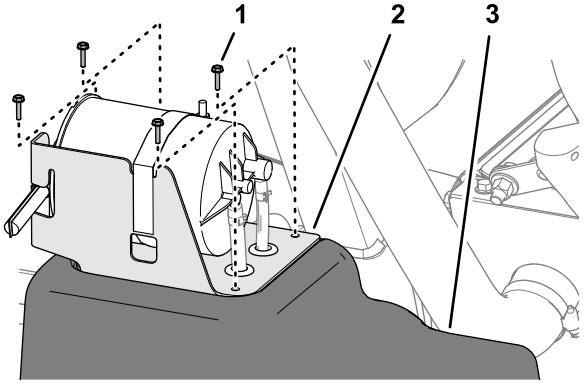

g323397

Figure 71

1. Screw (#10 x 3/4 inch)
2. Carbon-canister bracket
3. Fuel tank

3. Loosen the 2 hose clamps that secure the hoses to the fittings of the carbon canister.

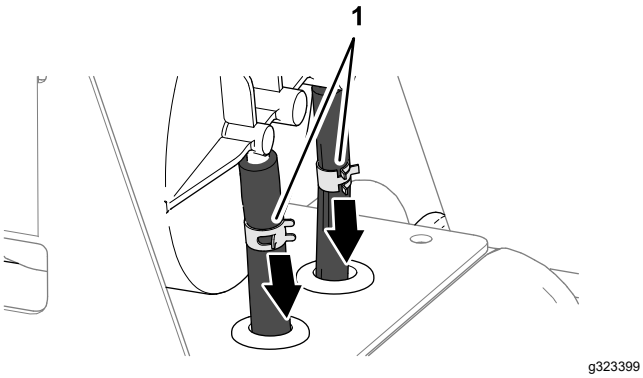

Figure 72

1. Hose clamps

4. Separate the hoses from the fittings.

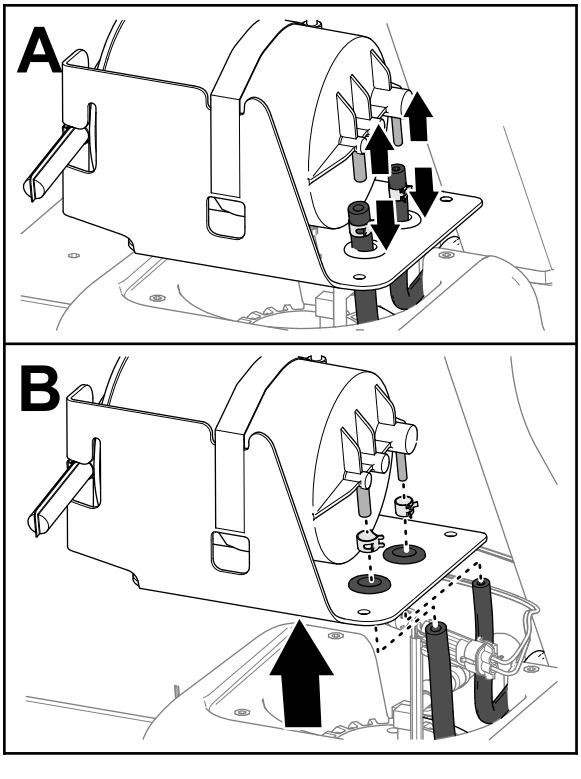

Figure 73

5. Remove the hose clamps from the hoses.
6. Remove the carbon canister from the fuel tank.

Removing the Fuel Pump and Sending Unit

1. Disconnect the 2-socket connector of the machine-wiring harness from the 2-pin connector of the fuel pump/sending unit; disconnect the 2-pin connector of the machine-wiring harness from the 2-socket connector of the fuel pump/sending unit.

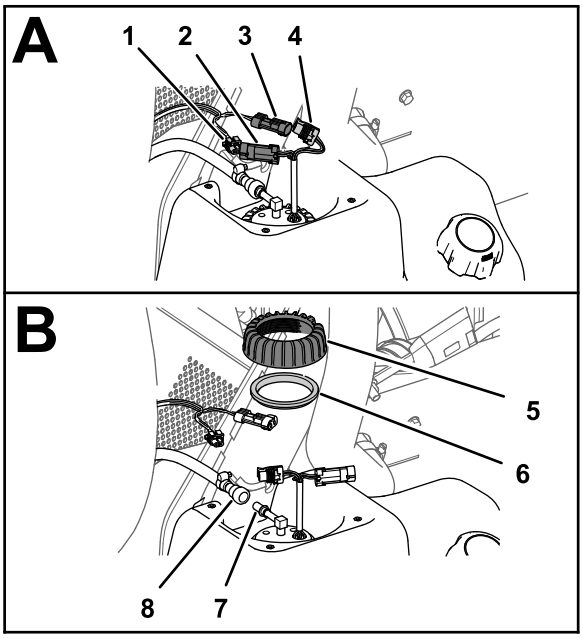

Figure 74

1.	2-socket connector (machine—wiring harness)	5.	Nut (fuel pump/sending unit)
2.	2-pin connector (fuel pump/sending unit)	6.	Seal
3.	2-pin connector (machine-wiring harness)	7.	Fitting (fuel pump)
4.	2-socket connector (fuel pump/sending unit)	8.	Fuel-hose coupling

2. Slide the locking sleeve of the fuel-hose coupling away from the fitting of the fuel pump/sending unit and remove the coupling and hose from the fitting.

   Note: Clean up any fuel that flows from the hose coupling or fuel-pump fitting.

3. Rotate the nut for the fuel pump/sending unit counterclockwise and remove the nut and seal
4. Carefully lift and rotate the fuel pump/sending unit out of the neck of the fuel tank.

   Important: **Use caution when handling the fuel pump/sending unit to avoid damaging the arm for the floats of the sending unit.**

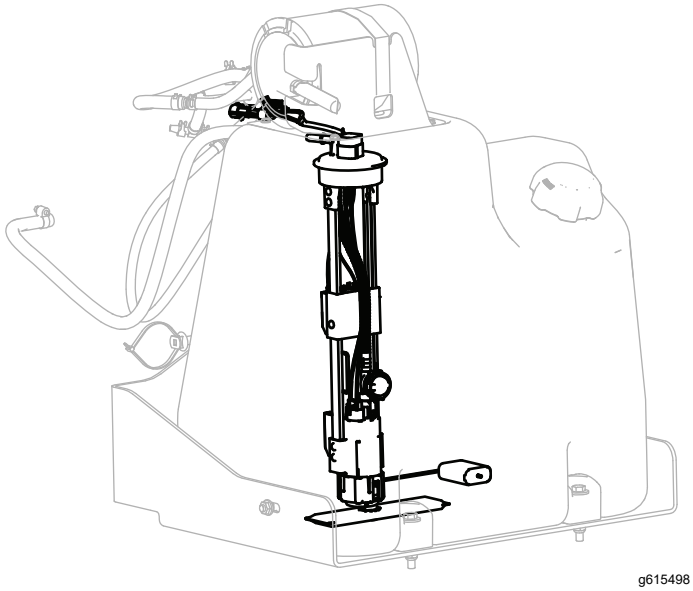

Figure 75

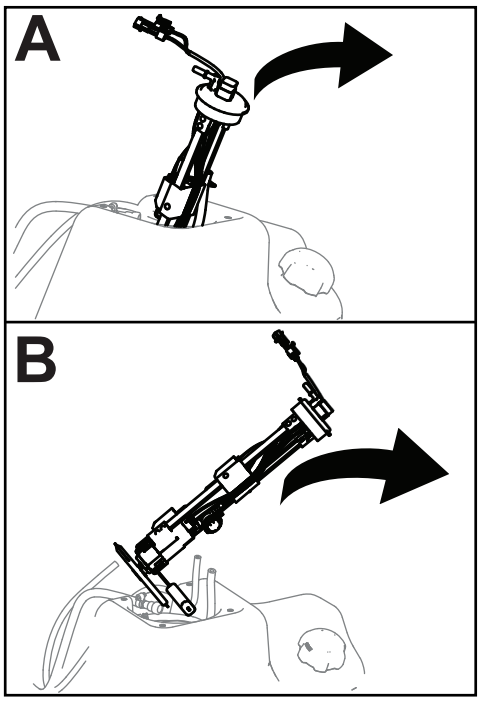

Figure 76

Installing the Fuel Pump and Sending Unit

1. Support the float arm and pickup tube together and slip the float and fuel filter into the opening in the fuel tank.

   Important: **Ensure that the float and the long leg of the filter are pointing forward in the tank and the fitting at the top of the fuel pump points 90° toward the centerline of the machine.**

2. Seat the fuel pump/sending unit into the opening in the tank.
3. Install the seal and nut over the fuel pump/sending and onto the neck of the fuel tank and tighten the nut hand tight.
4. Connect the coupling on the fuel hose to the fitting of the fuel pump.

   Note: Ensure that the locking sleeve of the fuel-hose coupling secures the coupling to the pump fitting.

5. Connect the 2-socket connector of the machine-wiring harness to the 2-pin connector of the fuel pump/sending unit; Connect the 2-pin connector of the machine-wiring harness to the 2-socket connector of the fuel pump/sending unit.
6. Rotate the starter switch to the ON position and check the fuel-hose coupling for leaks.

   Note: If the coupling leaks, rotate the starter switch to the OFF position, remove the key, remove the coupling, check the coupling and fitting for dirt or damage, and install the hose and coupling onto the fitting.

   Note: Repair any fuel leaks before proceeding to the next step.

Installing the Fuel Pump Cover

1. Assemble the cover to the tank (Figure 77) with the 4 screws (#10 x 3/4 inch) that you removed in step 2 of Removing the Fuel Pump Cover (page 57).

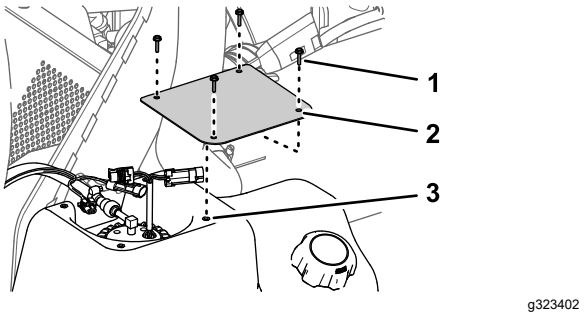

Figure 77

1. Screws (#10 x 3/4 inch)
2. Cover
3. Fuel tank

2. Torque the screws to 113 N·cm (10 in-lb).

Installing the Carbon Canister

1. Align the fuel tank hoses through the grommets of the carbon-canister bracket.

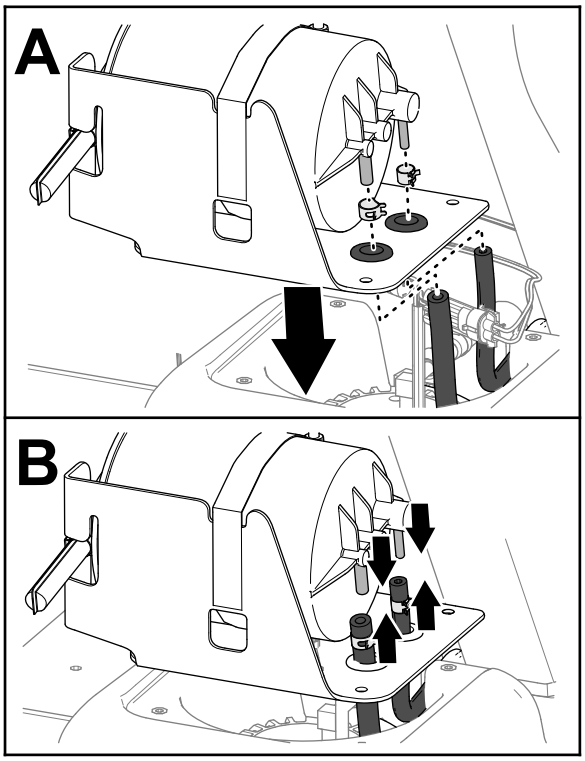

g323414

Figure 78

2. Assemble the hose clamps over the hoses.
3. Assemble the hoses onto the fittings of the carbon canister.
4. Secure the hoses to the fittings with the clamps

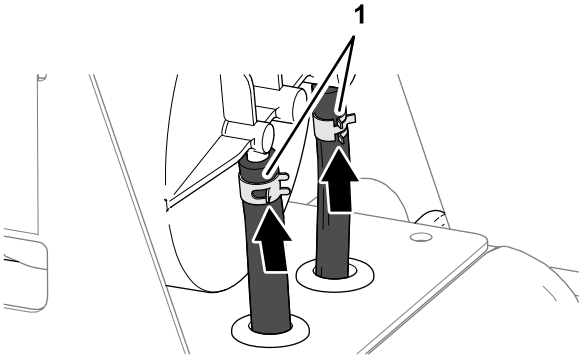

g323413

Figure 79

1. Hose clamps

5. Align the holes in the carbon-canister bracket with the holes in the fuel tank.

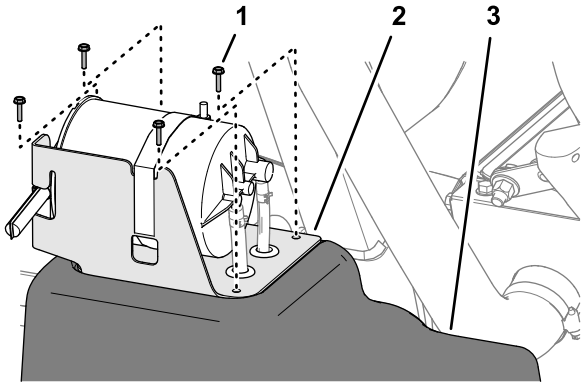

g323397

Figure 80

1. Screw (#10 x 3/4 inch)
2. Carbon-canister bracket
3. Fuel tank

6. Assemble the bracket to the tank with the 4 screws (#10 x 3/4 inch).
7. Torque the screws to 113 N·cm (10 in-lb).

Draining the Fuel Tank

Service Interval: Every 400 hours/Yearly (whichever comes first)

Drain and clean the fuel tank if the fuel system becomes contaminated or if you plan to store the machine for an extended period. When cleaning the fuel tank, use fresh, clean fuel to flush out the tank.

1. Transfer the fuel from the tank into an approved fuel container using a siphon pump. Transfer the fuel from the machine before you pour any remaining fuel in the tank through the fill spout, and into a fuel container.

   Note: If you decide to remove the fuel tank, you will need to disconnect the fuel hose and electrical connectors from the fuel pump and sending unit.

2. Flush the tank with fresh, clean fuel, if necessary.
3. Install the tank if you removed it.

   Note: If you removed the fuel tank, you will need to connect the fuel hose and electrical connectors to the fuel pump and sending unit.

4. Fill the tank with fresh, clean fuel.

Electrical System Maintenance

Electrical System Safety

- Disconnect the battery before repairing the machine. Disconnect the negative terminal first and the positive last. Connect the positive terminal first and the negative last.
- Charge the battery in an open, well-ventilated area, away from sparks and flames. Unplug the charger before connecting or disconnecting the battery.
- Wear protective clothing and use insulated tools.

Replacing the Fuses

The fuse block for the electrical system is located beneath the operator's seat (Figure 81).

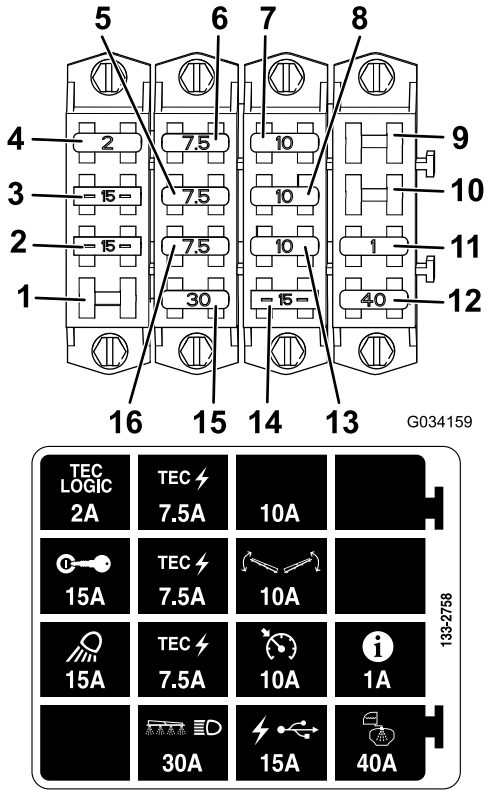

g034159

Figure 81

1. Open slot
2. Work light
3. Ignition
4. Tec Logic
5. Tec power
6. Tec power
7. Extra fuse slot
8. Boom control
9. Open slot
10. Open slot
11. InfoCenter
12. Tank spray
13. Cruise control
14. USB power
15. Boom and headlight
16. Tec power

Servicing the Battery

Always keep the battery clean and fully charged. Use a paper towel to clean the battery and battery box. If the battery terminals are corroded, clean them with a solution of 4 parts water and 1 part baking soda. Apply a light coating of grease to the battery terminals to prevent corrosion.

Voltage: 12 V with 690 cold cranking amps at 0°F (-18°C)

Removing the Battery

1. Position the sprayer on a level surface, engage the parking brake, shut off the spray pump, shut off the engine, and remove the key.
2. Remove the battery cover and disconnect the negative (black) ground cable from the battery post (Figure 82).

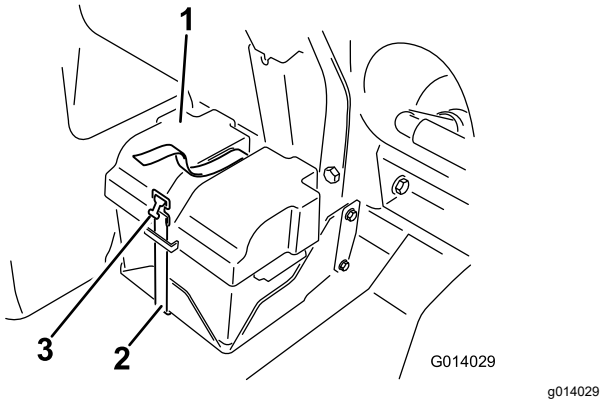

g014029

Figure 82

1. Battery cover
2. Strap
3. Buckle

⚠ WARNING

Incorrect battery cable routing could damage the sprayer and cables, causing sparks. Sparks can cause the battery gasses to explode, resulting in personal injury.

- **Always disconnect the negative (black) battery cable before disconnecting the positive (red) cable.**
- **Always connect the positive (red) battery cable before connecting the negative (black) cable.**

⚠ WARNING

Battery terminals or metal tools could short against metal sprayer components causing sparks. Sparks can cause the battery gasses to explode, resulting in personal injury.

- **When removing or installing the battery, do not allow the battery terminals to touch any metal parts of the sprayer.**
- **Do not allow metal tools to short between the battery terminals and metal parts of the sprayer.**
- **Always keep the battery strap in place to protect and secure the battery.**

3. Disconnect the positive (red) cable from the battery post.
4. Remove the battery.

Installing the Battery

1. Set the battery on the battery box so that the battery posts are away from the sprayer.
2. Connect the positive (red) cable to the positive (+) battery post and the negative (black) cable to the negative (–) battery post using the bolts and nuts.
3. Slide the insulator boot over the positive battery post.
4. Install the battery cover and secure it with the strap that you removed previously (Figure 82).

   Important: **Always keep the battery retainer in place to protect and secure the battery.**

Charging the Battery

Important: **Always keep the battery fully charged. This is especially important to prevent battery damage when the temperature is below 32°F (0°C).**

1. Remove the battery from the chassis; refer to Removing the Battery (page 61).
2. Connect a 3 to 4 A battery charger to the battery posts and charge the battery at a rate of 3 to 4 A for 4 to 8 hours (12 V).

   Important: **Do not overcharge the battery.**

3. Install the battery in the chassis; refer to Installing the Battery (page 62).

Storing the Battery

If you are storing the machine for more than 30 days, remove the battery and charge it fully. Either store it on a shelf or on the machine. Disconnect the battery cables if the battery is stored on the machine. Store the battery in a cool atmosphere to avoid quick deterioration of the charge in the battery. To prevent the battery from freezing, ensure that it is fully charged.

Drive System Maintenance

Inspecting the Wheels/Tires

Service Interval: After the first 8 hours—Torque the wheel-lug nuts.

Every 100 hours—Torque the wheel-lug nuts.

Every 100 hours—Inspect the condition and wear of the tires.

Torque the lug nuts at the front wheels to 75 to 102 N·m (55 to 75 ft-lb) and the lug nuts at the rear wheels to 95 to 122 N·m (75 to 90 ft-lb).

Operating accidents such as hitting curbs can damage a tire or rim and disrupt wheel alignment, so inspect tire condition after an accident.

Planetary-Gear-Drive Lubricant Specification

SAE 85W-140 gear lubricant

Checking the Planetary-Gear-Drive Lubricant

Service Interval: Every 400 hours

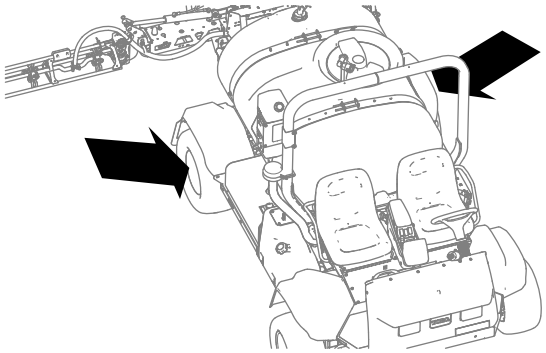

g238953

Figure 83

1. With the machine on a level surface, position a wheel so that the fill plug is at the highest (12 o'clock) position and the drain plug is at the lowest (6 o'clock) position (Figure 84).

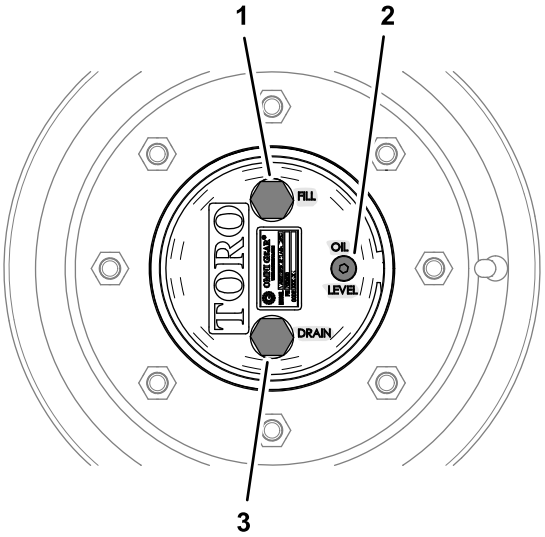

g238952

Figure 84

1. Fill plug (12 o'clock position)
2. Check plug
3. Drain plug (6 o'clock position)

2. Remove the check plug (Figure 41).

   You should see the lubricant level at the bottom of the threads in the check-plug hole.

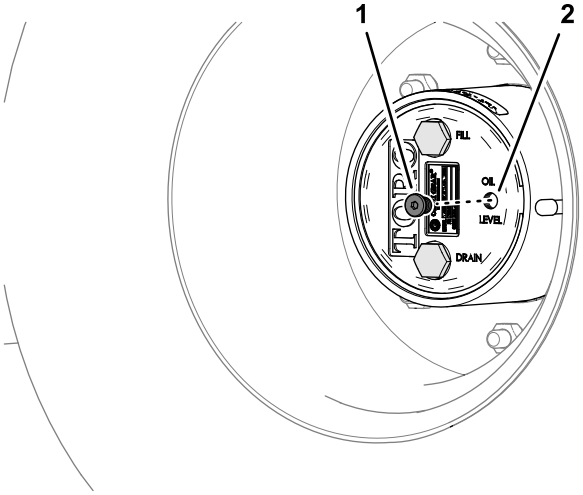

g238949

Figure 85

1. Check plug
2. Check-plug hole (planetary lubricant)

3. Check the O-rings of the check plug for the damage.

   If the O-ring is damaged, replace it.

4. If the lubricant level is low, remove the fill plug and add the specified lubricant until it begins to flow out of the check-plug hole (Figure 86); refer to Planetary-Gear-Drive Lubricant Specification (page 63).

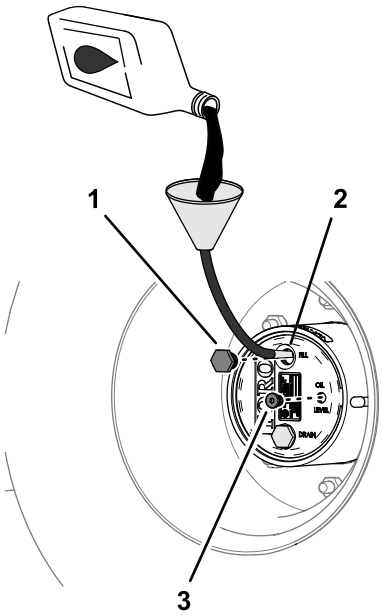

g238948

Figure 86

1. Fill plug
2. Fill-plug hole (planetary lubricant)
3. Check plug

5. Check the O-rings of the fill plug for the damage.

   If the O-ring is damaged, replace it.
6. Install the fill plug and the check plug (Figure 86).
7. Repeat steps 1 through 6 for the planetary-gear drive at the other side of the machine.

Changing the Planetary-Gear-Drive Lubricant

Service Interval: After the first 50 hours

Every 800 hours or yearly, whichever comes first.

Draining the Planetary-Gear-Drive Lubricant

1. With the machine on a level surface, position a wheel so that the fill plug is at the highest (12 o'clock) position and the drain plug is at the lowest (6 o'clock) position; refer to Figure 84 in Checking the Planetary-Gear-Drive Lubricant (page 63).
2. Place a drain pan under the hub of the planetary-gear drive, remove the drain plug, fill plug, and the check plug, and allow the lubricant to drain completely (Figure 87).

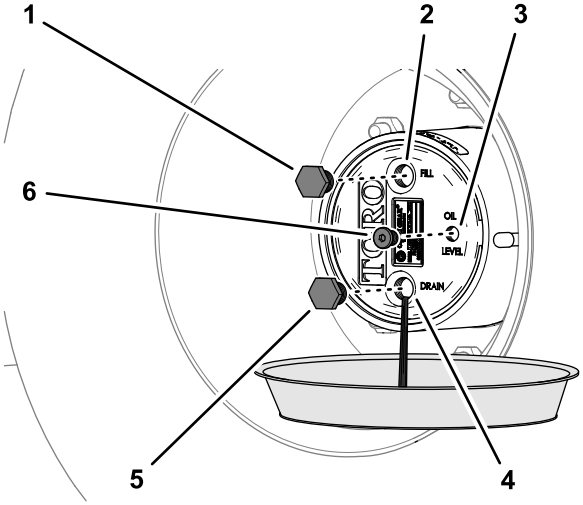

g238951

Figure 87

1. Fill plug
2. Fill-plug hole (planetary lubricant)
3. Check-plug hole (planetary lubricant)
4. Drain-plug hole (planetary lubricant)
5. Drain plug
6. Check plug

3. Examine the drain and fill plugs for metal shavings.

   If fill drain and fill plugs are covered with metal shavings, repair the planetary-gear drive.
4. Check the O-rings of the drain plug, fill plug, and the check plug for the damage.

   If the O-ring(s) is damaged, replace it.
5. Install the drain plug.
6. Place a drain pan under the brake housing, remove the drain plug, and allow the lubricant to drain completely (Figure 88).

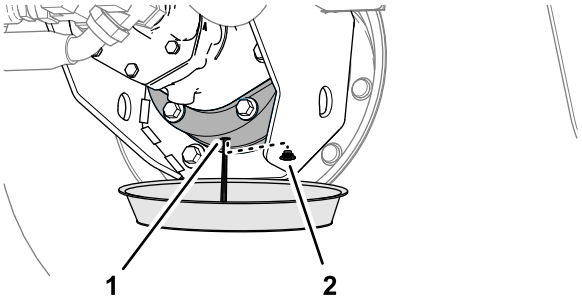

g238950

Figure 88

1. Drain hole (brake housing)
2. Drain plug

7. Install the drain plug in the brake housing.

Planetary-Gear-Drive with Lubricant Quantity

0.62 L (21 fl oz); refer to Planetary-Gear-Drive Lubricant Specification (page 63)

Filling the Planetary-Gear-Drive with Lubricant

1. Through the fill-plug hole, slowly add the specified gear lubricant; refer to Figure 86 in Checking the Planetary-Gear-Drive Lubricant (page 63).

   You should see the lubricant level at the bottom of the threads in the check-plug hole.

   Important: **If the planetary-gear drive fills before the specified lubricant quantity is added, wait 1 hour or install the plugs, and move the machine approximately 3 m (10 feet) to distribute the lubricant through the brake system. Then, remove the plugs and add the remaining lubricant.**

2. Allow the lubricant level to settle for 10 minutes, check the lubricant level, and add lubricant as needed to raise the level to the bottom of the threads in the check-plug hole.
3. Install the fill plug and check plug; refer to Figure 86 in Checking the Planetary-Gear-Drive Lubricant (page 63).
4. Repeat the steps in Draining the Planetary-Gear-Drive Lubricant (page 64) and Checking the Planetary-Gear-Drive Lubricant (page 63) for the planetary-gear drive at the other side of the machine.

Adjusting the Front Wheel Toe-In

Service Interval: Every 200 hours/Yearly (whichever comes first)

You should measure 0 to 3 mm (0 to 1/8 inch) between the front centerline of the tires and the back centerline of the tires.

1. Check and fill all tires; refer to Inspecting the Wheels/Tires (page 63).
2. Measure the distance between of the front tires at the axle height at the front and rear of the front tires (Figure 89).

   Note: The distance between the front of the tires should be 0 to 3 mm (0 to 1/8 inch) less than the distance between the back side of the front tires.

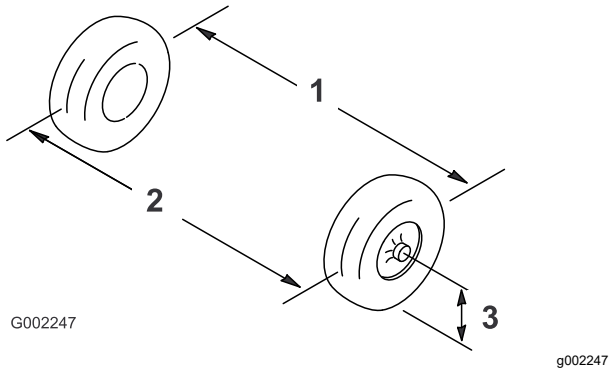

Figure 89

1. Tire center line—back
2. Tire center line—front
3. Axle center line

3. If the measurement does not fall within the specified range, loosen the jam nuts at both ends of the tie rod (Figure 90).

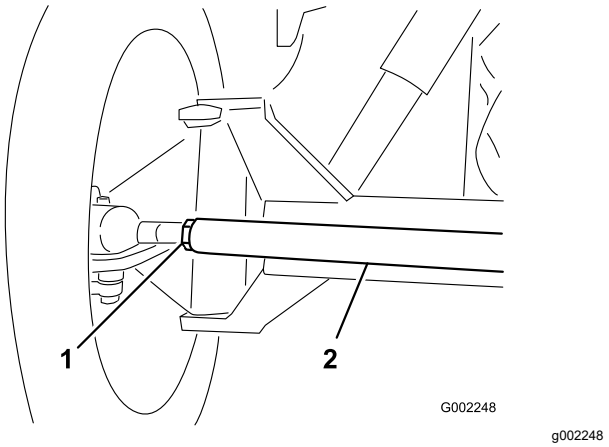

Figure 90

1. Jam nut
2. Tie rod

4. Rotate the tie rod to move the front of the tire inward or outward.
5. Tighten the tie rod jam nuts when the adjustment is correct.
6. Ensure that the steering wheel rotates an equal amount in both directions.

Cooling System Maintenance

Cooling System Safety

- Swallowing engine coolant can cause poisoning; keep out of reach from children and pets.
- Discharge of hot, pressurized coolant or touching a hot radiator and surrounding parts can cause severe burns.
  - Always allow the engine to cool at least 15 minutes before removing the radiator cap.
  - Use a rag when opening the radiator cap, and open the cap slowly to allow steam to escape.
- Do not operate the machine without the covers in place.
- Keep your fingers, hands, and clothing clear of the rotating fan and drive belt.

Coolant Specification

The coolant reservoir is filled at the factory with a 50/50 solution of water and ethylene glycol base extended-life coolant. Check the coolant level before you first start the engine and daily thereafter; refer to Checking the Coolant Level (page 66).

The following commercially available coolants or a manufacturer-specified equivalent meeting the long-life coolant specification:

Extended-Life Coolant Products

Ford (Motorcraft™)	WSS-M97B44-D
FCA—Chrysler (Mopar™)	MS-12106
General Motors (AC Delco™)	GM6277M (Dex-Cool™)
	GMW 3420
Volkswagen	G12
	G12+
	G12++
Coolants meeting technical standards ASTM D3306 or D4985, or SAE J1034, J814, or 1941.	
Important: **Do not rely on the color of the coolant to identify the difference between conventional (IAT) and extended-life (OAT) coolant types.** **Coolant manufacturers may dye extended-life coolant (OAT) in one of the following colors: red, pink, orange, yellow, blue, teal, violet, and green.**	

Coolant Types

Coolant Types (cont'd.)

Ethylene-Glycol Coolant Type	Corrosion Inhibitor Type	Service Interval
Extended-life antifreeze	Organic-acid technology (OAT)	5-years
Conventional antifreeze (green)	Inorganic-acid technology (IAT)	2-years

Note: When adding coolant to the machine, you will not damage the cooling system by mixing conventional (IAT) antifreeze with extended-life (OAT) antifreeze. However, mixing antifreeze types degrades the long life/extended life attribute of the OAT formulation.

Important: **The service interval of conventional (IAT) and extended-life (OAT) blended-coolant mixture—at any ratio—lasts as long as the coolant with the shortest service interval: 2 years.**

Checking the Coolant Level

Service Interval: Before each use or daily Check the level of coolant in the radiator and the expansion tank at the beginning of each day before starting the engine.

⚠ CAUTION

If the engine has been running, the coolant may be hot and pressurized. If you open the radiator cap when the coolant is hot, it could spray out and severely burn you or bystanders.

Allow the engine to cool for at least 15 minutes before opening the radiator cap.

Important: **Do not add coolant to an overheated engine until the engine has fully cooled. Adding coolant to an overheated engine may crack the engine block.**

1. Position the sprayer on a level surface.
2. Engage the parking brake, shut off the spray pump, shut off the engine, and remove the key.
3. Carefully remove the radiator cap and the expansion-tank cap (Figure 91).

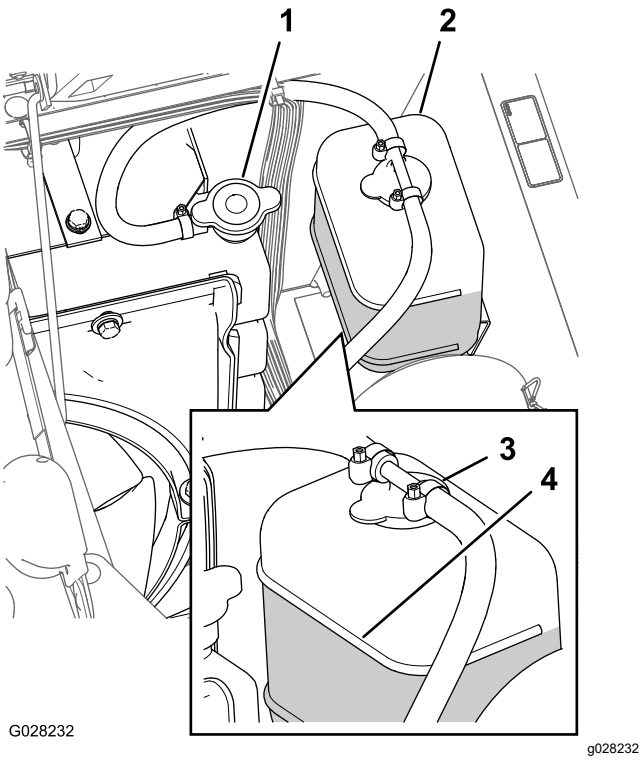

Figure 91

1. Radiator cap
2. Expansion tank
3. Expansion-tank cap
4. Full-line mark

4. Check the coolant level in the radiator and in the expansion tank.

   Note: The radiator should be filled to the top of the filler neck and the expansion tank filled to the Full mark on the tank (Figure 91).

5. If the coolant level is low, remove the expansion-tank cap and the radiator cap, and fill the expansion tank to the Full mark and the radiator to the top of the filler neck (Figure 91).

   Important: **Do not overfill the expansion tank.**

   Important: **Do not use water only or an alcohol/methanol-based coolant.**

6. Install the radiator cap and the expansion-tank cap (Figure 91).

Coolant Quantity

5.5 L (5.8 US qt); refer to Coolant Specification (page 66)

Changing the Coolant

Service Interval: Every 400 hours/Yearly (whichever comes first)—Check the coolant (as directed by the manufacturer) and change if necessary.

Owner provided equipment: a handheld coolant thermometer

1. Position the sprayer on a level surface, engage the parking brake, shut off the spray pump, shut off the engine, and remove the key.
2. Wait until the engine is cool, then remove the radiator cap (Figure 91).
3. Place a large drain pan under the radiator.
4. Open the drain valve and drain the coolant into the pan (Figure 92).

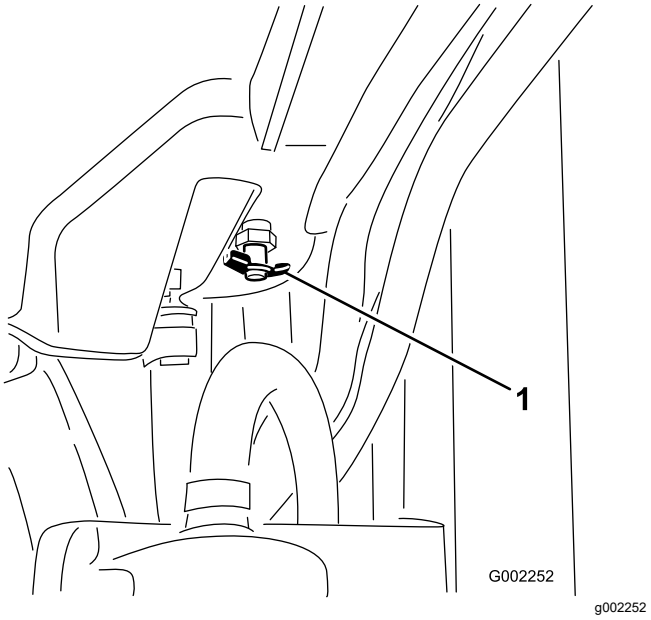

Figure 92

1. Drain valve

5. Close the drain valve (Figure 92).
6. Remove the radiator cap (Figure 91).
7. Slowly fill the radiator with coolant to approximately 2.5 cm (1 inch) below the sealing surface of the cap.

   Note: Use enough coolant to fill the engine and the system lines. This allows the coolant to expand without it overflowing while the engine is warming up.

8. Start the engine with the cap loose on the radiator (Figure 91).
9. Allow the engine to warm up until the thermostat opens.

   Note: The engine thermostat should open when the hand-held thermometer indicates the coolant temperature is between 79° to 88°C (175° to 190°F).
10. Once the coolant has warmed up, top off the coolant level to the sealing surface of the cap and tighten the cap (Figure 91).
11. Open the expansion-tank cap and fill the tank with coolant to the Cold level (Figure 91).
12. Check the coolant levels after several engine startup and shut-down cycles.

    Note: Add coolant to the radiator and expansion tank as needed.

Brake Maintenance

Adjusting the Brakes

If the brake pedal travels more than 2.5 cm (1 inch) before you feel resistance, adjust the brakes as follows:

1. Position the sprayer on a level surface, shut off the spray pump, shut off the engine, and remove the key.
2. Engage the parking brake.
3. Put blocks under the wheels to prevent the machine from rolling.
4. Release the parking brake.
5. Loosen the front jam nuts on the brake cables under the front end of the sprayer (Figure 93).

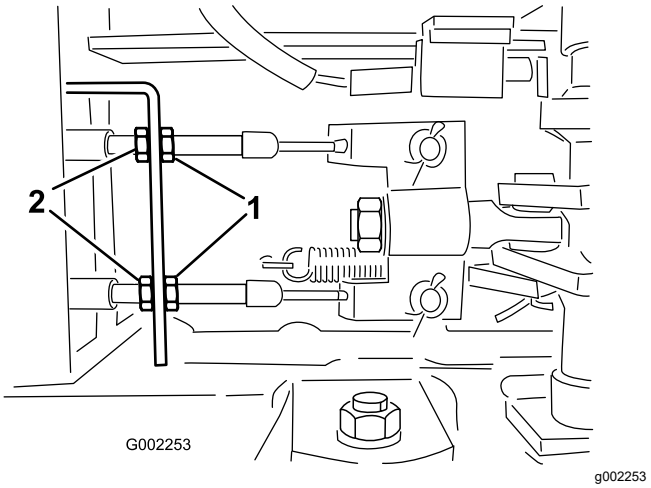

Figure 93

1. Front jam nuts
2. Rear jam nuts

6. Tighten the rear jam nuts equally until the brake pedal moves between 1 to 2 cm (1/2 to 1 inch) before you feel resistance (Figure 93).

   Important: **Ensure that you tighten both rear nuts equally so that the threaded ends of the brake cables in front of the front nuts are the same length.**
7. Tighten the front jam nuts.

Belt Maintenance

Servicing the Alternator Belt

Service Interval: After the first 8 hours

Every 100 hours

Check the condition and tension of the alternator/cooling fan belt. Replace the belt as necessary.

1. Position the sprayer on a level surface, engage the parking brake, shut off the spray pump, shut off the engine, and remove the key.
2. Check the alternator-belt tension by depressing the belt midway between the alternator and the crankshaft pulleys with 10 kg (22 lb) of force.

   Note: The belt should deflect 10 to 12 mm (0.39 to 0.47 inches). If the belt deflection is too much, go to step 3. If the belt tension is correct, you may skip the remainder of this procedure and resume operating the sprayer.
3. Loosen the bolt at the pivot point of the alternator; loosen the bolt that secures the alternator to the slotted brace (Figure 94).

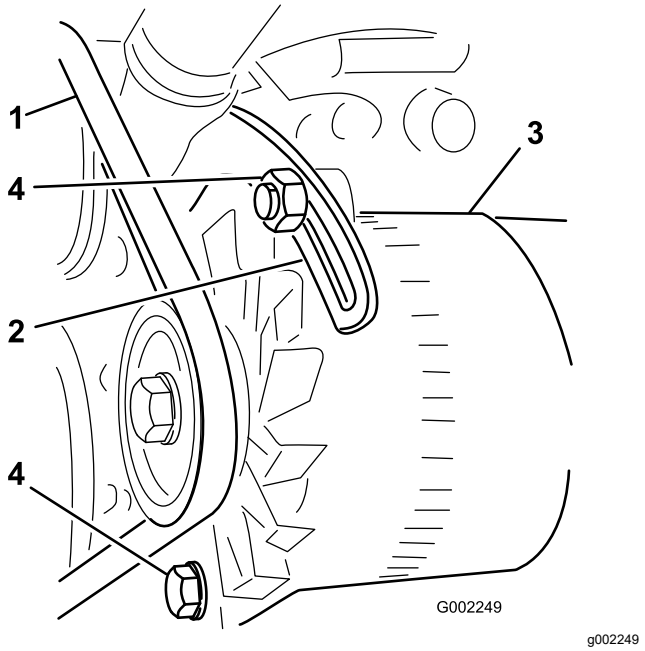

Figure 94

1. Alternator belt
2. Brace
3. Alternator
4. Bolts

4. Insert a pry bar between the alternator and the engine and carefully pry on the alternator outward.
5. When you achieve the proper tension, tighten the alternator and the bolts to secure the adjustment.
6. Tighten the locknut to secure the adjustment.

Hydraulic System Maintenance

Hydraulic System Safety

- Seek immediate medical attention if fluid is injected into skin. Injected fluid must be surgically removed within a few hours by a doctor.
- Safely relieve all pressure in the hydraulic system before performing any work on it.
- Ensure that all hydraulic-fluid hoses and lines are in good condition and all hydraulic connections and fittings are tight before applying pressure to the hydraulic system.
- Keep your body and hands away from pinhole leaks or nozzles that eject high-pressure hydraulic fluid.
- Use cardboard or paper to find hydraulic leaks.

Hydraulic Fluid Specifications

The reservoir is filled at the factory with high-quality hydraulic fluid. Check the level of the hydraulic fluid before you first start the engine and daily thereafter; refer to Checking the Hydraulic Fluid (page 70).

Recommended hydraulic fluid: Toro PX Extended Life Hydraulic Fluid; available in 19 L (5 US gallon) pails or 208 L (55 US gallon) drums.

Note: A machine using the recommended replacement fluid requires less frequent fluid and filter changes.

Alternative hydraulic fluids: If Toro PX Extended Life Hydraulic Fluid is not available, you may use another conventional, petroleum-based hydraulic fluid having specifications that fall within the listed range for all the following material properties and that it meets industry standards. Do not use synthetic fluid. Consult with your lubricant distributor to identify a satisfactory product.

Note: Toro does not assume responsibility for damage caused by improper substitutions, so use products only from reputable manufacturers who will stand behind their recommendation.

High Viscosity Index/Low Pour Point Anti-wear Hydraulic Fluid, ISO VG 46

Material Properties:	
Viscosity, ASTM D445	cSt @ 40°C (104°F) 44 to 48

High Viscosity Index/Low Pour Point Anti-wear Hydraulic Fluid, ISO VG 46 (cont'd.)

Viscosity Index ASTM D2270	140 or higher
Pour Point, ASTM D97	-37°C to -45°C (-34°F to -49°F)
Industry Specifications:	Eaton Vickers 694 (I-286-S, M-2950-S/35VQ25 or M-2952-S)

Note: Many hydraulic fluids are almost colorless, making it difficult to spot leaks. A red dye additive for the hydraulic fluid is available in 20 ml (0.67 fl oz) bottles. A bottle is sufficient for 15 to 22 L (4 to 6 US gallons) of hydraulic fluid. Order Part No. 44-2500 from your authorized Toro distributor.

Important: **Toro Premium Synthetic Biodegradable Hydraulic Fluid is the only synthetic biodegradable fluid approved by Toro. This fluid is compatible with the elastomers used in Toro hydraulic systems and is suitable for a wide-range of temperature conditions. This fluid is compatible with conventional mineral oils, but for maximum biodegradability and performance, the hydraulic system should be thoroughly flushed of conventional fluid. The oil is available in 19 L (5 US gallon) pails or 208 L (55 US gallon) drums from your authorized Toro distributor.**

Checking the Hydraulic Fluid

Service Interval: Before each use or daily Check the level of the hydraulic fluid before the engine is first started and daily thereafter.

Important: **If the fluid becomes contaminated, contact an authorized Toro distributor to have the system flushed.**

Contaminated fluid looks milky or black when compared to clean fluid.

1. Position the sprayer on a level surface, engage the parking brake, shut off the spray pump, shut off the engine, and remove the key.
2. Clean the area around the hydraulic-fluid-tank dipstick cap and remove it (Figure 95).

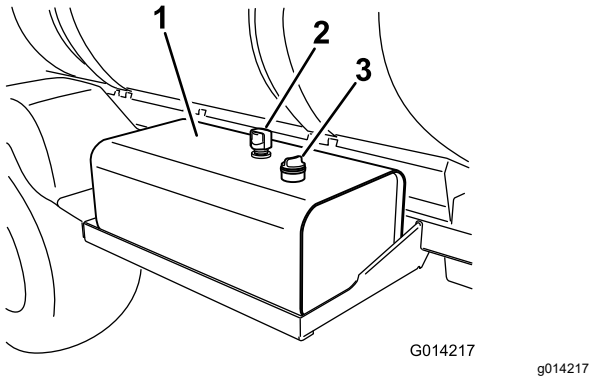

Figure 95

1. Hydraulic-fluid tank
2. Vent
3. Dipstick cap

Important: **Be very careful not to get dirt or other contaminants into the opening when checking the fluid.**

3. Wipe the dipstick clean with a cloth and replace it completely in the tank.
4. Remove the dipstick from the filler neck and check the fluid level (Figure 96).

   Note: The fluid level should be at the lower mark on the dipstick when the fluid is cold.

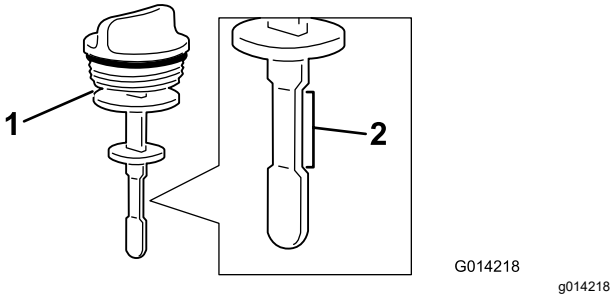

Figure 96

1. Dipstick
2. Safe-operating range

5. If the fluid is low, fill the tank with the specified hydraulic fluid to raise the level to the lower mark; refer to Hydraulic Fluid Specifications (page 70).
6. Install the dipstick cap into the tank and secure.

Replacing the Hydraulic Filters

Service Interval: Every 1,000 hours—**If you are using the recommended hydraulic fluid,** replace the hydraulic filter.

Every 800 hours—**If you are not using the recommended hydraulic fluid or have ever filled the reservoir with an alternative fluid,** replace the hydraulic filter.

⚠ WARNING

Hot hydraulic fluid can cause severe burns.

Allow the hydraulic fluid to cool before performing any maintenance to the hydraulic system.

Important: **You may void the warranty on some components if you use any other filter.**

Use the Toro replacement filter (See your *Parts Manual* for the correct part number.)

1. Position the sprayer on a level surface, engage the parking brake, shut off the spray pump, shut off the engine, and remove the key.
2. Locate the 2 hydraulic filters on the machine (Figure 97 and Figure 98).

   Note: 1 filter is below the hydraulic-fluid tank and the other filter is located at the rear of the machine on the frame.

   - Forward filter—below the hydraulic tank.

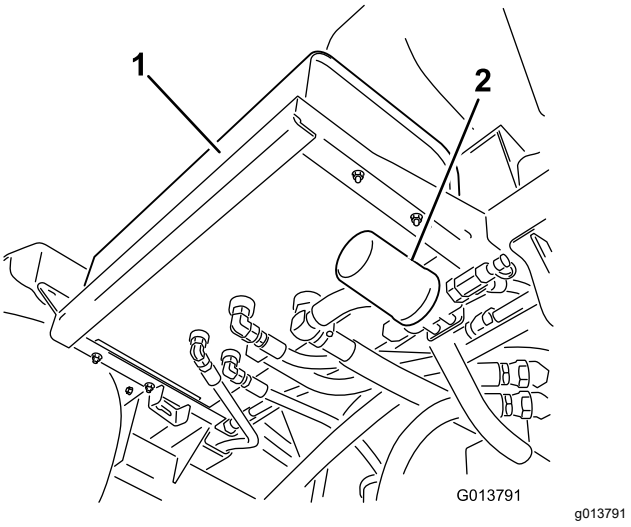

Figure 97

1. Hydraulic tank
2. Forward filter

   - Rear filter—located on the machine frame.

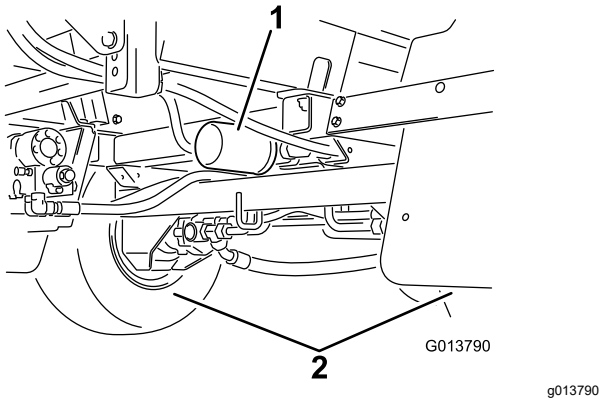

Figure 98

1. Rear filter
2. Rear wheels

3. Clean the area around the filter-mounting area.
4. Place a drain pan under the filter.
5. Remove the filter.

   Dispose of the used filter at a certified recycling center.
6. Lubricate the new filter gasket with clean hydraulic fluid; refer to Hydraulic Fluid Specifications (page 70).
7. Wipe clean the filter-mounting area with a rag.
8. Thread the filter on until the gasket contacts the mounting plate, then tighten the filter an additional 1/2 turn.
9. Start the engine, set the throttle at fast idle, and let the engine run 3 to 5 minutes to purge air from the hydraulic system.
10. Shut off the engine, check the hydraulic-fluid level, and check for leaks; refer to Checking the Hydraulic Fluid (page 70).

Hydraulic-Fluid Quantity

54 L (14.3 US gallons); refer to Hydraulic Fluid Specifications (page 70)

Changing the Hydraulic Fluid

Service Interval: Every 2,000 hours—**If you are using the recommended hydraulic fluid,** change the hydraulic fluid.

Every 800 hours—**If you are not using the recommended hydraulic fluid or have ever filled the reservoir with an alternative fluid,** change the hydraulic fluid.

⚠ WARNING

Hot hydraulic fluid can cause severe burns.

Allow the hydraulic fluid to cool before performing any maintenance to the hydraulic system.

Important: **You may void the warranty on some components if you use any other fluid.**

1. Replace the hydraulic-fluid filters; refer to Replacing the Hydraulic Filters (page 71).
2. Clean the area around a hydraulic-hose fitting on the bottom of the hydraulic-fluid tank (Figure 99).

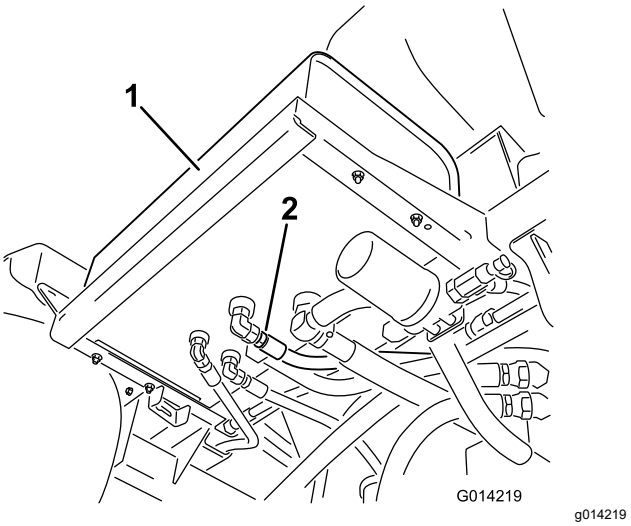

Figure 99

1. Hydraulic tank
2. Hydraulic hose and fitting

3. Place a large drain pan under the hydraulic tank fittings.
4. Remove the hose fitting from the tank, allowing the fluid to drain into the pan (Figure 99).

   Dispose of the used fluid at a certified recycling center.
5. Install the hose and fitting to the tank and tighten it securely.
6. Fill the hydraulic reservoir with approximately 53 L (14 US gallons) of specified hydraulic fluid or equivalent; refer to Hydraulic Fluid Specifications (page 70).
7. Start the engine, set the throttle at fast idle, and let the engine run 3 to 5 minutes to purge air from the hydraulic system.
8. Shut off the engine, check the hydraulic-fluid level, and check for leaks; refer to Checking the Hydraulic Fluid (page 70).

Sprayer System Maintenance

Inspecting the Hoses

Service Interval: Every 200 hours—Inspect all hoses and connections for damage and proper attachment.

Every 400 hours/Yearly (whichever comes first)—Inspect the O-rings in the valve assemblies and replace them if necessary.

Examine each hose in the spray system for cracks, leaks, or other damage. At the same time, inspect the connections and fittings for similar damage. Replace any hoses and fittings if damaged.

Changing the Suction Filter

Service Interval: Every 400 hours

Note: Determine the appropriate suction filter mesh size that you need for your job; refer to Selecting a Suction Filter (page 23).

1. Park the machine on a level surface, engage the parking brake, shut off the pump, shut off the engine, and remove the key.
2. At the top of the sprayer tank, remove the retainer that secures the hose fitting attached to the large hose from the filter housing (Figure 100).

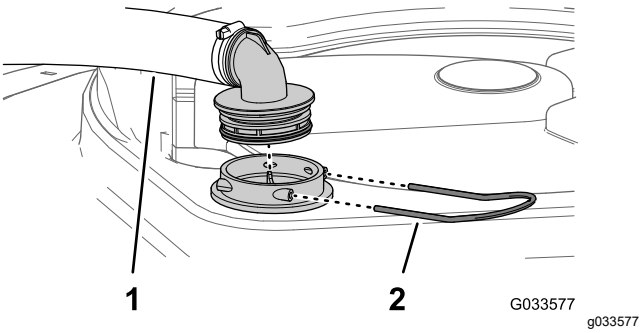

Figure 100

1. Suction hose
2. Retainer

3. Remove the hose and hose fitting from the filter housing (Figure 100).
4. Remove the old suction filter from the filter housing in the tank (Figure 101).

   Note: Discard the old filter.

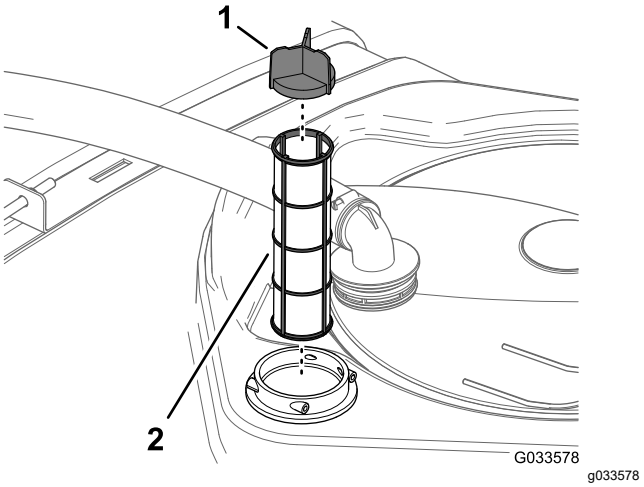

Figure 101

1. Screen vane
2. Suction filter

5. Install the new suction filter into the filter housing.

   Note: Ensure that the filter is fully seated.
6. Align the hose and hose fitting to the filter housing at the top of the tank, and secure the fitting and housing with the retainer that you removed in step 2.

Changing the Pressure Filter

Service Interval: Every 400 hours

1. Move the machine to a level surface, shut off the spray pump, shut off the engine, and remove the key.
2. Align a drain pan under the pressure filter (Figure 102).

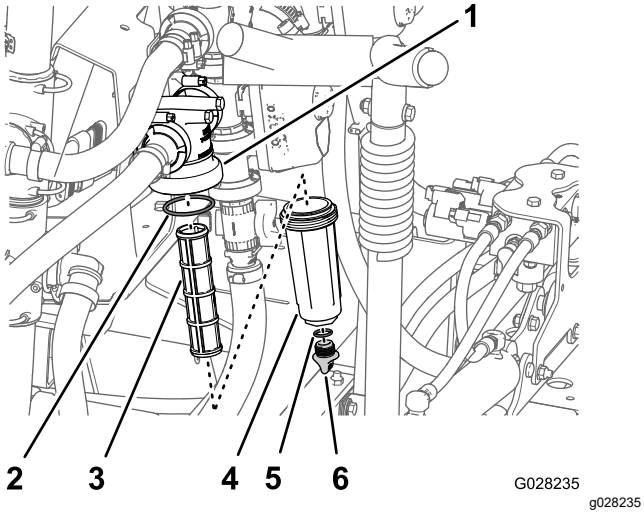

Figure 102

1. Filter head
2. O-ring (bowl)
3. Filter element
4. Bowl
5. O-ring (drain plug)
6. Drain plug

3. Rotate the drain plug counterclockwise and remove it from the bowl of the pressure filter (Figure 102).

   Note: Allow the bowl to drain completely.

4. Rotate the bowl counterclockwise and remove it from its filter head (Figure 102).
5. Remove the old pressure-filter element (Figure 102).

   Note: Discard the old filter.

6. Check the O-ring for the drain plug (located inside the bowl) and the O-ring for the bowl (located inside the filter head) for damage and wear (Figure 102).

   Note: Replace any damaged or worn O-rings for the plug, bowl, or both.

7. Install the new pressure-filter element into the filter head (Figure 102).

   Note: Ensure that the filter element is firmly seated into the filter head.

8. Install the bowl onto the filter head and tighten by hand (Figure 102).
9. Install the plug into the bowl and tighten by hand (Figure 102).

Changing the Nozzle Filter

Note: Determine the appropriate nozzle filter mesh size that you need for your job; refer to Selecting a Nozzle-Tip Filter (Optional) (page 25).

1. Park the machine on a level surface, engage the parking brake, shut off the sprayer pump, shut off the engine, and remove the key.
2. Remove the nozzle from the spray turret (Figure 103).

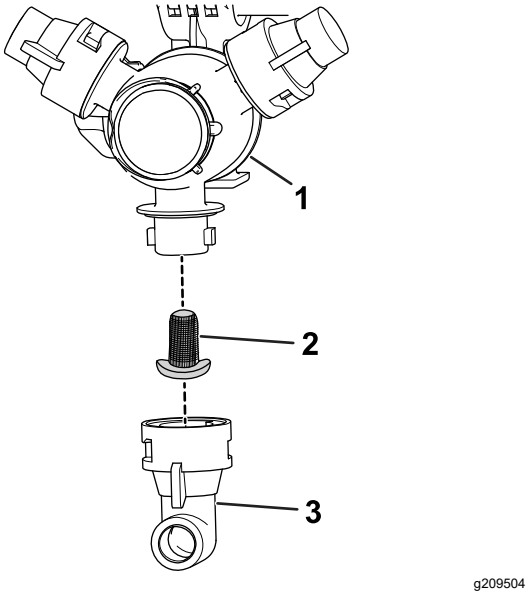

Figure 103

1. Spray turret
2. Nozzle filter
3. Nozzle

3. Remove the old nozzle filter (Figure 103).

   Note: Discard the old filter.

4. Install the new nozzle filter (Figure 103).

   Note: Ensure that the filter is fully seated.

5. Install the nozzle onto the spray turret (Figure 103).

Adjusting the Booms to Level

The following procedure can be used to adjust the actuators on the center boom to keep the left and right booms at level.

1. Extend the booms to the spray position.
2. Remove the cotter pin from the pivot pin (Figure 104).

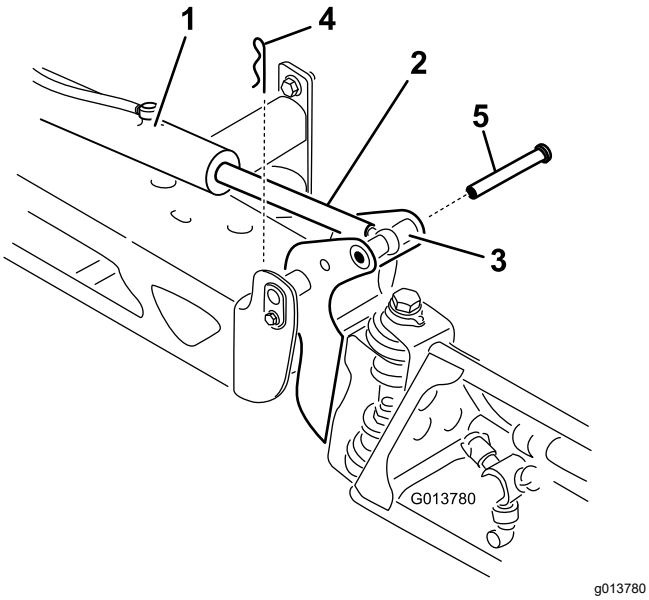

Figure 104

1. Actuator
2. Actuator rod
3. Boom-pivot pin housing
4. Cotter
5. Pin

3. Lift up on the boom and remove the pin (Figure 104), and slowly lower the boom to the ground.
4. Inspect the pin for any damage, and replace it if necessary.
5. Hold the actuator rod at the flats of the rod using a wrench, then loosen the jam nut (Figure 105).

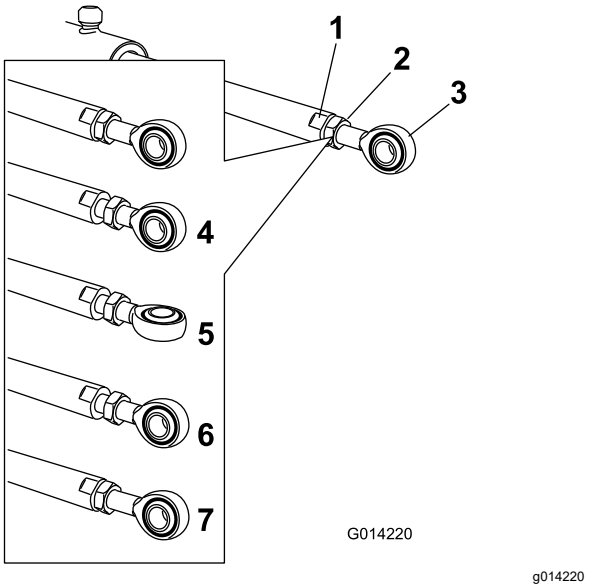

Figure 105

1. Flat on the actuator rod
2. Jam nut
3. Rod end
4. Jam nut loosened
5. Rod end adjusted
6. Rod end position for assembly
7. Jam nut tightened to lock new position

6. Turn the rod end in the actuator rod to shorten or lengthen the extended actuator to the desired position (Figure 105).

   Note: You must turn the rod end in half or complete revolutions so that you can assemble the rod to the boom.
7. Tighten the jam nut to secure the actuator and rod end.
8. Raise the boom to align the pivot with the actuator rod.
9. While holding the boom, insert the pin through both boom pivot and rod end (Figure 104).
10. With the pin in place, release the boom and secure the pin with the cotter previously removed.
11. Repeat the procedure for the other actuator rod if necessary.

Inspecting the Nylon Pivot Bushings

Service Interval: Every 400 hours/Yearly (whichever comes first)

1. Park the machine on a level surface, engage the parking brake, shut off the pump, shut off the engine, and remove the key.

2. Extend the outer-boom sections to the spray position and support the boom sections using stands or straps and lifting equipment.
3. Remove the bolt and nut that secure the pivot pin, and remove the pin (Figure 106).

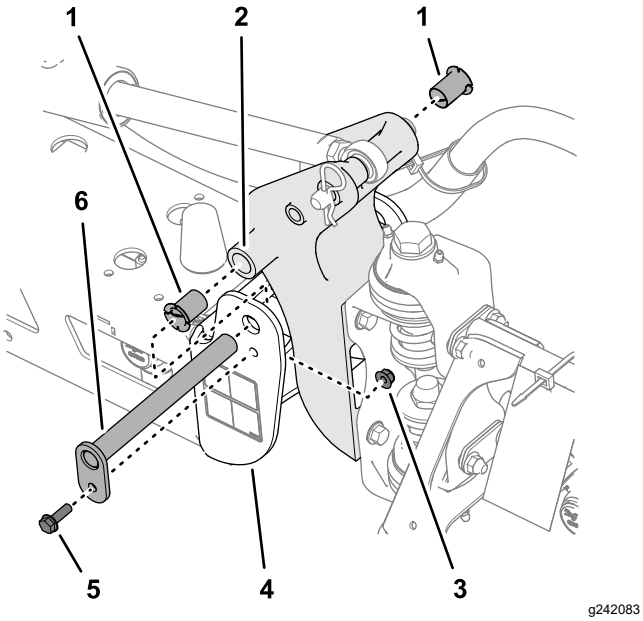

Figure 106

1. Nylon bushings
2. Pivot bracket
3. Flange locknut
4. End channel (center frame)
5. Flange bolt
6. Pivot pin

4. Remove the boom and pivot bracket assembly from the end channel of the center frame to access the nylon bushings.
5. Remove and inspect the nylon bushings from the front and back sides of the pivot bracket (Figure 106).

   Note: Replace any worn or damaged bushings.
6. Lubricate the nylon bushings with a small amount of oil, and install the bushings into the pivot bracket (Figure 106).
7. Align the holes in the pivot bracket with the holes in the end channel (Figure 106).
8. Install the pivot pin and secure it with the flange bolt and flange locknut removed in step 3.
9. Repeat steps 2 through 8 for the other outer-boom section.

Pump Maintenance

Inspecting the Pump

Service Interval: Every 400 hours/Yearly (whichever comes first)—Inspect the pump diaphragms and replace if necessary (see an authorized Toro distributor).

Every 400 hours/Yearly (whichever comes first)—Inspect the pump check valves and replace if necessary (see an authorized Toro distributor).

Note: The following machine components are considered parts subject to consumption through use unless found defective and are not covered by the warranty associated with this machine.

Have an authorized Toro distributor check the following internal pump components for damage:

- Pump diaphragms
- Pump check valves assemblies

Replace any components, if necessary.

Cleaning

Wash the machine as needed using water alone or with a mild detergent. You may use a rag when washing the machine.

Important: **Do not use brackish or reclaimed water to clean the machine.**

Note: Do not use power-washing equipment to wash the machine. Power-washing equipment may damage the electrical system, loosen important decals, or wash away necessary grease at friction points. Avoid excessive use of water near the control panel, engine, and battery.

Important: **Do not wash the machine with the engine running. Washing the machine with the engine running may result in internal engine damage.**

Cleaning the Radiator-Cooling Fins

Service Interval: Every 200 hours—Clean the radiator fins.

Important: **Do not spray water into a hot engine compartment, as it may damage the engine.**

1. Position the sprayer on a level surface, engage the parking brake, shut off the spray pump, shut off the engine, and remove the key.
2. Tilt the driver and passenger seats forward and align the prop rod into the detent in the prop-rod-guide slot.
3. Allow the cooling system to cool.
4. Remove the seat-base-access cover; refer to Accessing the Engine (page 47).
5. Using a soft brush and low-pressure compressed air, clean the fins of the radiator.

   Note: Clean the radiator fins more often if needed. Check all coolant hoses and replace any that are worn, leaking, or damaged.
6. Lower the driver and passenger seats.
7. Install the seat-base-access cover; refer to Accessing the Engine (page 47).

Cleaning the Flow Meter

Service Interval: Every 200 hours/Yearly (whichever comes first) (more often when using wettable powders).

1. Thoroughly rinse and drain the entire spraying system.
2. Remove the flow meter from the sprayer and flush it with clean water.
3. Remove the retainer ring on the upstream side.

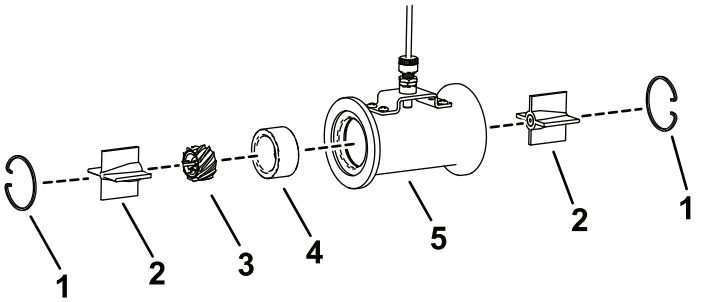

g614966

Figure 107

1. Retaining ring
2. Bearing assembly
3. Turbine
4. Collar
5. Housing

4. Clean the turbine, bearing assembly, and the collar to remove metal filings and any wettable powders.

   Important: **Add a mark onto the turbine to indicate installation direction. It is important to install it the same way it is being removed.**
5. Inspect the face of the turbine for wear. Turn the flow meter 180 degrees for installation if the face is showing signs of wear.

   Note: If both sides of the turbine show wear, replace the flow meter.

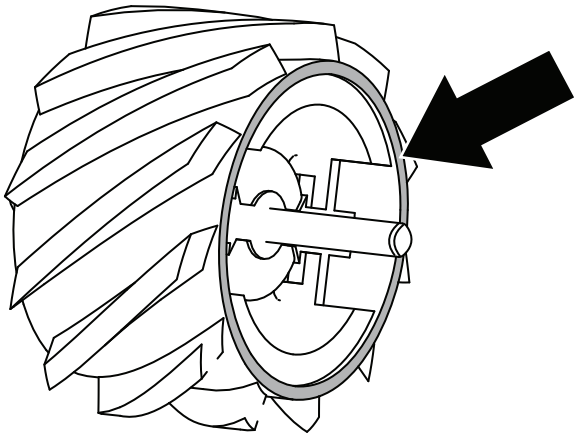

g614968

Figure 108

6. Inspect the shaft end for cupping wear.

- A—the shaft is showing no wear; the turbine is usable.
- B—the cupping is inside the bevel; rotate the turbine 180 degrees.
- C—the cupping is nearly at the edge; rotate the turbine 180 degrees.
- D—the cupping is at the edge and is flaring out; replace the flow meter.

Note: If both shaft ends are showing wear, replace the flow meter.

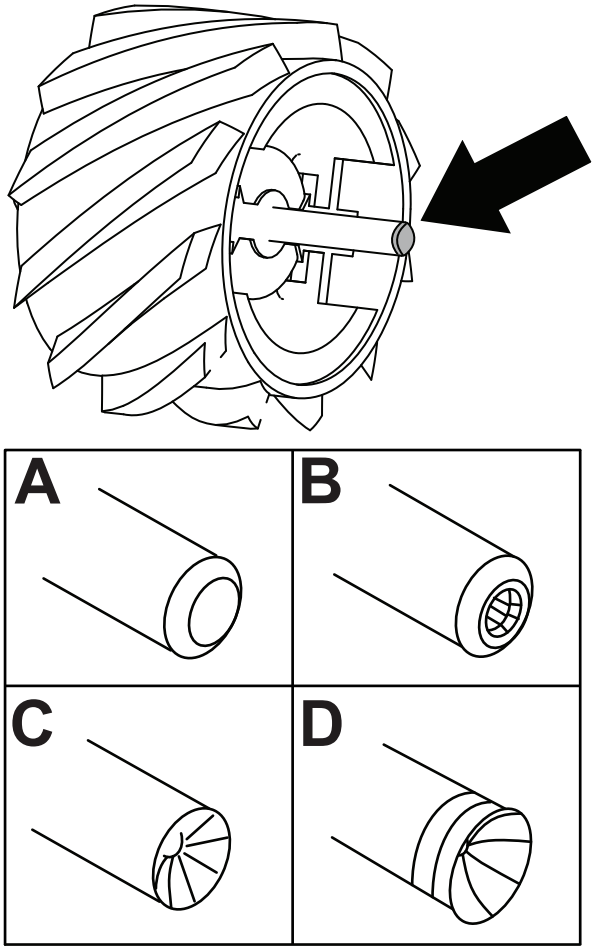

g614967

Figure 109

7. Assemble the flow meter.
8. Use a low pressure (50 kPa or 5 psi) air jet to ensure that the turbine spins freely.
9. Calibrate the flow meter; refer to your *Software Guide*.

Storage

Storage Safety

- Before you leave the operator's position, do the following:
  - Park the machine on a level surface.
  - Shut off the spray pump.
  - Engage the parking brake.
  - Shut off the engine and remove the key (if equipped).
  - Wait for all movement to stop.
  - Allow the machine to cool before adjusting, servicing, cleaning, or storing it.
- Do not store the machine or fuel container where there is an open flame, spark, or pilot light, such as on a water heater or other appliance.

Preparing the Machine for Storage

Short-Term Storage

(Less than 30 days)

Perform the procedures that follow:

1. Cleaning the Exterior of the Machine (page 78)
2. Preparing to Condition the Sprayer (page 79)
3. Conditioning the Sprayer (page 79)

Cleaning the Exterior of the Machine

Important: **Do not use brackish or reclaimed water to clean the machine.**

1. Park the machine on a level surface; engage the parking brake; shut off the spray pump and the engine; remove the key; and wait for all movement to stop before leaving the machine.
2. Clean the dirt and grime from the entire machine, including the outside of the cylinder-head fins and blower housing of the engine.

   Important: **You can wash the machine with mild detergent and water. *Do not* use *high-pressure water* to wash the machine. Pressure washing may damage the electrical system or wash away necessary grease at friction points. Avoid excessive use of water, especially near the control panel, lights, engine, and the battery.**

Preparing to Condition the Sprayer

1. Move the machine to the drain pad area, engage the parking brake, shut off the spray pump, shut off the engine, remove the key, and wait for all movement to stop before leaving the operator's position.
2. Drain the fresh-water tank and leave the tank spigot open.
3. Drain the sprayer tank as completely as possible.
4. Prepare rust inhibiting, non-alcohol based, RV antifreeze solution; refer to Preparing the Conditioner (page 41).
5. Remove the tube from the back of the pressure gauge and place the end of the tube into a container (Figure 110).

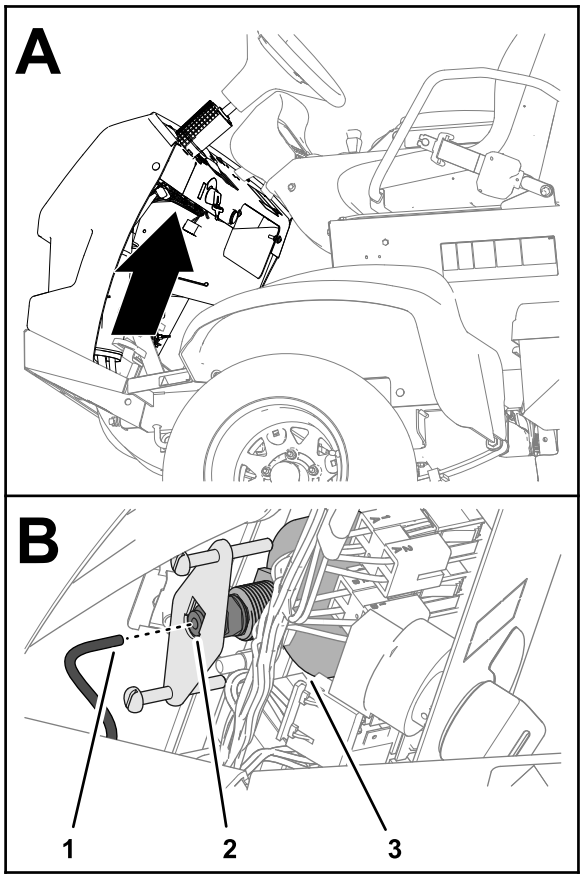

g276304

Figure 110

1. Pressure-gauge tube
2. Tube coupler
3. Pressure gauge

6. Start the engine and lower the outer booms sections.

Conditioning the Sprayer

1. Run the spray pump for a few minutes to circulate the RV antifreeze throughout the spray system and any installed spray accessories.
2. Turn the left, center, and right section switches to the ON position.
3. Turn the master section switch to the ON position and look for the following:
   - Ensure that RV anti-freeze flows from the disconnected end of the pressure-gauge tube.
   - Spray out the nozzle until the RV anti-freeze is visible.
4. Turn the master section switch to the OFF position.
5. Turn the pump switch to the OFF position.
6. Use the boom-section lift switches to raise the outer boom sections.

   Raise the boom sections until they have moved completely into boom-transport cradle forming the "X" transport position and the lift cylinders are fully retracted.

   Note: Make sure that the lift cylinders are fully retracted to prevent actuator rod damage.
7. Shut off the engine.
8. Drain the sprayer tank as completely as possible.

Long-Term Storage

(Longer than 30 days)

Perform the following procedures found in Short-Term Storage (page 78):

1. Cleaning the Exterior of the Machine (page 78)
2. Preparing to Condition the Sprayer (page 79)
3. Conditioning the Sprayer (page 79)

In addition, perform the procedures that follow:

1. Servicing the Chassis (page 79)
2. Service the Sprayer (page 80)
3. Servicing the Engine (page 80)
4. Servicing the Fuel System (page 80)
5. Servicing the Battery (page 80)
6. Protecting the Machine (page 80)

Servicing the Chassis

1. Check the air pressure in the tires; refer to Checking the Tire Air Pressure (page 22).
2. Check the brakes; refer to Adjusting the Brakes (page 68).
3. Check and tighten all bolts, nuts, and screws.

Note: Repair or replace any parts that are worn or damaged.

4. Paint all scratched or bare metal surfaces (paint is available from your authorized Toro distributor).

Service the Sprayer

1. Clean the agitation valve and the 3 section valves; refer to Cleaning the Sprayer (page 38).
2. Grease the sprayer; refer to Greasing the Spray Pump (page 50).
3. Check the condition of all spray hoses.

   Note: Replace any hoses that are worn or damaged.
4. Tighten all hose clamps and fittings.

Servicing the Engine

1. Service the air cleaner; refer to Checking the Air Cleaner (page 52).
2. Change the engine-oil filter and oil; refer to Changing the Engine Oil Filter (page 54) and Changing the Engine Oil (page 55).

Servicing the Fuel System

1. Drain the fuel tank; refer to Draining the Fuel Tank (page 60).
2. Prepare fuel with fuel stabilizer according to the manufacturer's instructions, and add it to the fuel tank.
3. Start the engine and run it at idle speed for 5 minutes.
4. Shut off the engine.
5. Secure all the fuel-system fittings.

Servicing the Battery

1. Move the machine in a clean, dry storage area.
2. Remove the battery from the chassis; refer to Removing the Battery (page 61).

   Note: Do not connect the battery cables to the battery posts during storage.
3. Check the electrolyte level.
4. Fully charge the battery; refer to Charging the Battery (page 62).

   Important: **The battery must be fully charged to prevent it from freezing and being damaged at temperatures below 32°F (0°C). A fully charged battery maintains its charge for about 50 days at temperatures lower than 4°C (40°F). If the temperatures will be above 4°C (40°F), check the water level in the battery and charge it every 30 days.**

Protecting the Machine

1. Remove the key from the starter switch and put the key in a safe place out of the reach of children.
2. Cover the machine to protect it and keep it clean.

Preparing the Machine for Service

1. Insert the pressure-gauge tube into the tube coupler at back of the pressure gauge (Figure 111).

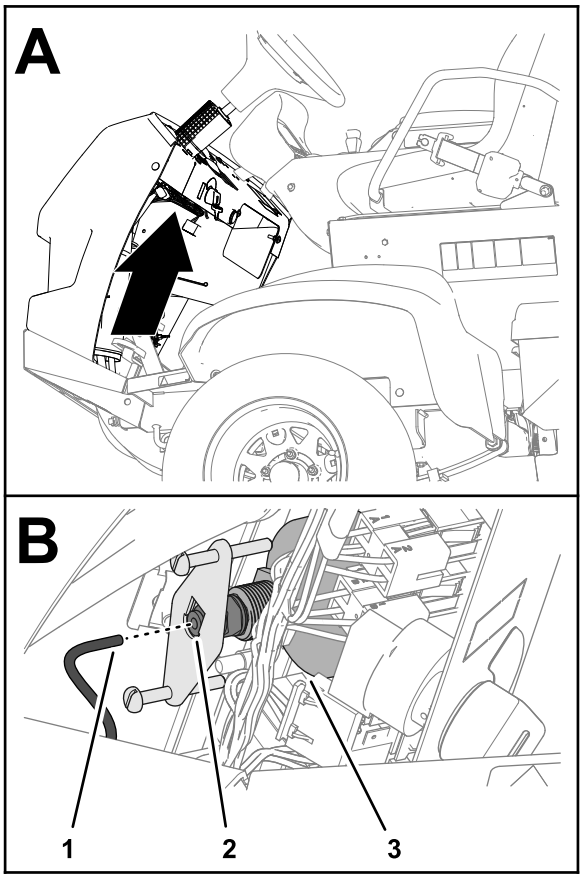

g276304

Figure 111

1. Pressure-gauge tube
2. Tube coupler
3. Pressure gauge

2. Close the spigot of the fresh-water tank.
3. Add fuel to the fuel tank.
4. Fully charge the battery; refer to Charging the Battery (page 62).
5. Install the battery into the chassis; refer to Installing the Battery (page 62).

Troubleshooting

Troubleshooting the Engine and Vehicle

Problem	Possible Cause	Corrective Action
The starter does not rotate the engine.	1. The electrical connections are corroded or loose. 2. A fuse is blown or loose. 3. The battery is discharged. 4. A broken starter or starter solenoid. 5. There are seized internal engine components.	1. Check the electrical connections for good contact. 2. Correct or replace fuse. 3. Charge or replace the battery. 4. Contact your authorized Toro distributor. 5. Contact your authorized Toro distributor.
The engine cranks but does not start.	1. The fuel tank is empty. 2. Dirt, water, or stale fuel is in the fuel system. 3. Clogged fuel line. 4. The run relay is not energized. 5. The starter switch is broken.	1. Fill the tank with fresh fuel. 2. Drain and flush the fuel system; add fresh fuel. 3. Clean or replace. 4. Contact your authorized Toro distributor. 5. Contact your authorized Toro distributor.
The engine starts but does not keep running.	1. The fuel-tank vent is restricted. 2. Dirt or water is in the fuel system. 3. The fuel filter is clogged. 4. A fuse is blown or loose. 5. The fuel pump is broken. 6. There are loose wires or poor connections. 7. The cylinder-head gasket is broken.	1. Replace the fuel cap. 2. Drain and flush the fuel system; add fresh fuel. 3. Replace the fuel filter. 4. Correct or replace the fuse. 5. Contact your authorized Toro distributor. 6. Check and tighten wire connections. 7. Contact your authorized Toro distributor.
The engine runs but knocks or misses.	1. Dirt, water, or stale fuel in the fuel system. 2. There are loose wires or poor connections. 3. The engine is overheating.	1. Drain and flush the fuel system; add fresh fuel. 2. Check and tighten wire connections. 3. See “The engine overheats” below.
The engine does not idle.	1. The fuel-tank vent is restricted. 2. Dirt, water, or stale fuel is in the fuel system. 3. The fuel pump is broken. 4. The engine has low compression. 5. The air-filter element is dirty.	1. Replace the fuel cap. 2. Drain and flush the fuel system; add fresh fuel. 3. Contact your authorized Toro distributor. 4. Contact your authorized Toro distributor. 5. Replace the air-filter element.

Problem	Possible Cause	Corrective Action
The engine overheats.	1. The crankcase-oil level is incorrect. 2. The coolant level is low. 3. The engine is operated under excessive load. 4. The air-intake screens are dirty. 5. The cooling fins and air passages under the engine-blower housing and/or the rotating-air-intake screen are plugged.	1. Fill or drain to the Full mark. 2. Check the coolant level and replenish it as needed. 3. Reduce load; use lower ground speed. 4. Clean with the air-intake screens with every use. 5. Clean the cooling fins and air passages with every use.
The engine loses power.	1. The crankcase-oil level is incorrect. 2. The air-cleaner element is dirty. 3. Dirt, water, or stale fuel is in the fuel system. 4. The engine is overheated. 5. The vent hole in the fuel-tank-vent fitting is plugged. 6. The engine has low compression.	1. Fill or drain to the Full mark. 2. Replace the air-cleaner element. 3. Drain and flush the fuel system; add fresh fuel. 4. See "The engine overheats" above. 5. Replace the fuel cap. 6. Contact your authorized Toro distributor.
There is abnormal vibration or noise.	1. The engine mounting bolts are loose. 2. There is a problem with the engine.	1. Tighten the engine mounting bolts. 2. Contact your authorized Toro distributor.
The machine does not operate or is sluggish in either direction because the engine bogs down or stalls.	1. The parking brake is set.	1. Release the parking brake.
The machine does not operate in either direction.	1. The parking brake was not released or the parking brake is not releasing. 2. The transmission is broken. 3. The control linkage needs adjustment or replacement. 4. The drive shaft or wheel hub key has been damaged.	1. Release the parking brake or check the linkage. 2. Contact your authorized Toro distributor. 3. Contact your authorized Toro distributor. 4. Contact your authorized Toro distributor.

Troubleshooting the Spray System

Problem	Possible Cause	Corrective Action
A spray section does not spray.	1. The electrical connection on the section valve is dirty or disconnected. 2. There is a blown (open) fuse. 3. There is a pinched hose. 4. A section bypass is improperly adjusted. 5. There section valve is damaged. 6. The electrical system is damaged.	1. Turn the valve off manually. Disconnect the electrical connector on the valve and clean all leads, then connect it. 2. Check the fuses and replace them as necessary. 3. Repair or replace the hose. 4. Adjust the section bypass. 5. Contact your authorized Toro distributor. 6. Contact your authorized Toro distributor.
A spray section does not turn off.	1. The valve is damaged.	1. Disassemble the spray section valve; refer to the section Cleaning the Section Valves. Inspect all parts and replace any that are damaged.
A spray section valve is leaking.	1. An O-ring is deteriorated. 2. A valve seat is worn or damaged.	1. Disassemble the valve and replace the seals using the Valve Repair Kit; contact your authorized Toro distributor. 2. Remove the valve actuator and replace the valve seals and seat using the Valve Repair Kit; contact your authorized Toro distributor.
The pressure drops when you turn on a spray section.	1. The section-bypass valve is improperly adjusted. 2. There is an obstruction in the section-valve body. 3. A nozzle filter is damaged or clogged.	1. Adjust the section-bypass valve. 2. Remove the inlet and outlet connections to the section valve and remove any obstructions. 3. Remove and inspect all nozzles.
The spray nozzle(s) drip when the section switch(es) is shut off	1. Debris has accumulated between the nozzle body and the check-valve diaphragm.	1. Clean the nozzle body and diaphragm; refer to Cleaning the Nozzle Body and Check-Valve Diaphragm.
The sprayer pressure drops while spraying.	1. The suction filter screen is clogging or clogged.	1. Remove and clean or replace the suction filter.

Schematics

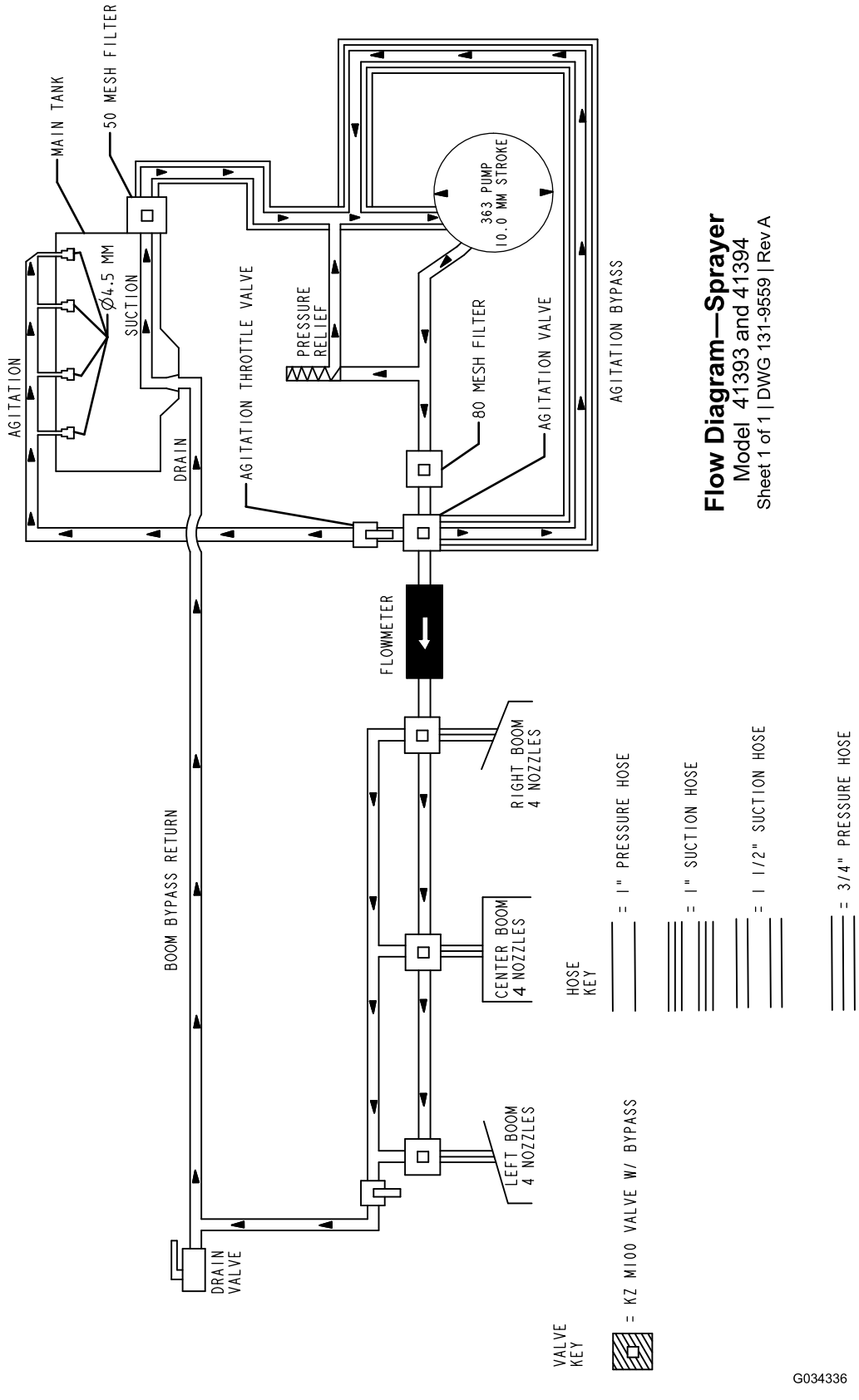

g034336

Sprayer System Schematic (Rev. DWG 131-9559 Rev A)

Notes:

EEA/UK Privacy Notice

Toro's Use of Your Personal Information

The Toro Company ("Toro") respects your privacy. When you purchase our products, we may collect certain personal information about you, either directly from you or through your local Toro company or dealer. Toro uses this information to fulfil contractual obligations - such as to register your warranty, process your warranty claim or to contact you in the event of a product recall - and for legitimate business purposes - such as to gauge customer satisfaction, improve our products or provide you with product information which may be of interest. Toro may share your information with our subsidiaries, affiliates, dealers or other business partners in connection these activities. We may also disclose personal information when required by law or in connection with the sale, purchase or merger of a business. We will never sell your personal information to any other company for marketing purposes.

Retention of your Personal Information

Toro will keep your personal information as long as it is relevant for the above purposes and in accordance with legal requirements. For more information about applicable retention periods please contact legal@toro.com.

Toro's Commitment to Security

Your personal information may be processed in the US or another country which may have less strict data protection laws than your country of residence. Whenever we transfer your information outside of your country of residence, we will take legally required steps to ensure that appropriate safeguards are in place to protect your information and to make sure it is treated securely.

Access and Correction

You may have the right to correct or review your personal data, or object to or restrict the processing of your data. To do so, please contact us by email at legal@toro.com. If you have concerns about the way in which Toro has handled your information, we encourage you to raise this directly with us. Please note that European residents have the right to complain to your Data Protection Authority.

California Proposition 65 Warning Information

What is this warning?

You may see a product for sale that has a warning label like the following:

WARNING: Cancer and Reproductive Harm—www.p65Warnings.ca.gov.

What is Prop 65?

Prop 65 applies to any company operating in California, selling products in California, or manufacturing products that may be sold in or brought into California. It mandates that the Governor of California maintain and publish a list of chemicals known to cause cancer, birth defects, and/or other reproductive harm. The list, which is updated annually, includes hundreds of chemicals found in many everyday items. The purpose of Prop 65 is to inform the public about exposure to these chemicals.

Prop 65 does not ban the sale of products containing these chemicals but instead requires warnings on any product, product packaging, or literature with the product. Moreover, a Prop 65 warning does not mean that a product is in violation of any product safety standards or requirements. In fact, the California government has clarified that a Prop 65 warning "is not the same as a regulatory decision that a product is 'safe' or 'unsafe.'" Many of these chemicals have been used in everyday products for years without documented harm. For more information, go to https://oag.ca.gov/prop65/faqs-view-all.

A Prop 65 warning means that a company has either (1) evaluated the exposure and has concluded that it exceeds the "no significant risk level"; or (2) has chosen to provide a warning based on its understanding about the presence of a listed chemical without attempting to evaluate the exposure.

Does this law apply everywhere?

Prop 65 warnings are required under California law only. These warnings are seen throughout California in a wide range of settings, including but not limited to restaurants, grocery stores, hotels, schools, and hospitals, and on a wide variety of products. Additionally, some online and mail order retailers provide Prop 65 warnings on their websites or in catalogs.

How do the California warnings compare to federal limits?

Prop 65 standards are often more stringent than federal and international standards. There are various substances that require a Prop 65 warning at levels that are far lower than federal action limits. For example, the Prop 65 standard for warnings for lead is 0.5 µg/day, which is well below the federal and international standards.

Why don't all similar products carry the warning?

- Products sold in California require Prop 65 labelling while similar products sold elsewhere do not.
- A company involved in a Prop 65 lawsuit reaching a settlement may be required to use Prop 65 warnings for its products, but other companies making similar products may have no such requirement.
- The enforcement of Prop 65 is inconsistent.
- Companies may elect not to provide warnings because they conclude that they are not required to do so under Prop 65; a lack of warnings for a product does not mean that the product is free of listed chemicals at similar levels.

Why does Toro include this warning?

Toro has chosen to provide consumers with as much information as possible so that they can make informed decisions about the products they buy and use. Toro provides warnings in certain cases based on its knowledge of the presence of one or more listed chemicals without evaluating the level of exposure, as not all the listed chemicals provide exposure limit requirements. While the exposure from Toro products may be negligible or well within the "no significant risk" range, out of an abundance of caution, Toro has elected to provide the Prop 65 warnings. Moreover, if Toro does not provide these warnings, it could be sued by the State of California or by private parties seeking to enforce Prop 65 and subject to substantial penalties.

TORO®

Count on it.