Form No. 3484-595 Rev A

TORO®

Count on it.

Operator's Manual

Multi Pro® 1750 Turf Sprayer

Model No. 41196—Serial No. 419000000 and Up

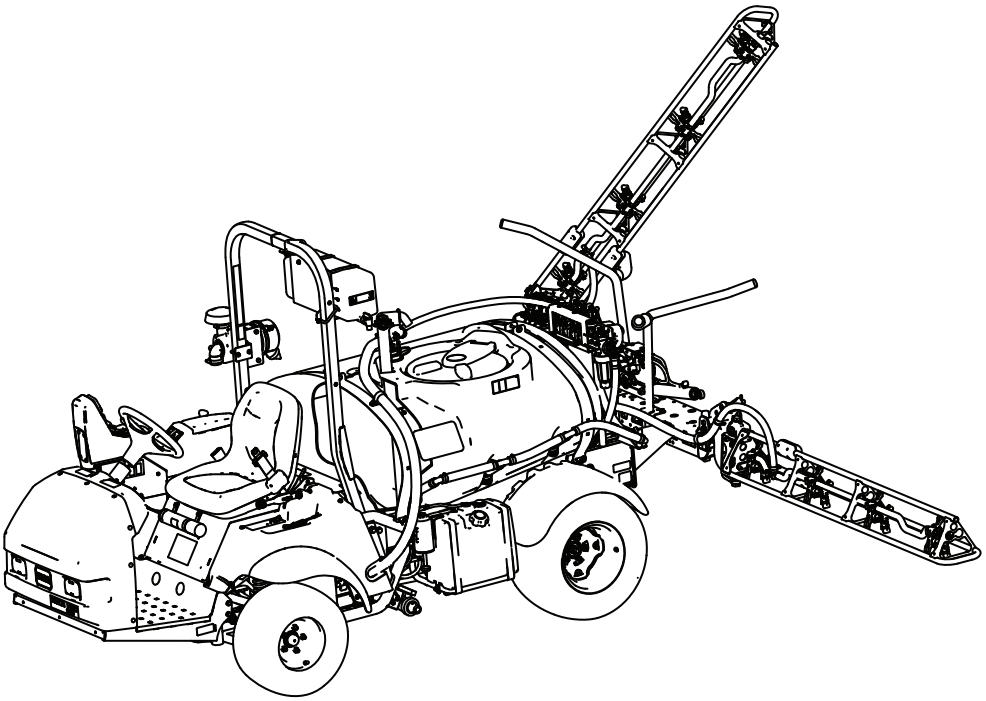

Register at www.Toro.com.
Original Instructions (EN)

CE UK CA

3484-595

This product complies with all relevant European directives; for details, please see the separate product specific Declaration of Conformity (DOC) sheet.

It is a violation of California Public Resource Code Section 4442 or 4443 to use or operate the engine on any forest-covered, brush-covered, or grass-covered land unless the engine is equipped with a spark arrester, as defined in Section 4442, maintained in effective working order or the engine is constructed, equipped, and maintained for the prevention of fire.

The enclosed *engine owner's manual* is supplied for information regarding the US Environmental Protection Agency (EPA) and the California Emission Control Regulation of emission systems, maintenance, and warranty. Replacements may be ordered through the engine manufacturer.

If this machine is equipped with a telematics device, refer to your authorized Toro distributor for instructions to activate the device.

⚠ WARNING

CALIFORNIA
Proposition 65 Warning

The engine exhaust from this product contains chemicals known to the State of California to cause cancer, birth defects, or other reproductive harm.

Battery posts, terminals, and related accessories contain lead and lead compounds, chemicals known to the State of California to cause cancer and reproductive harm. Wash hands after handling.

Use of this product may cause exposure to chemicals known to the State of California to cause cancer, birth defects, or other reproductive harm.

Introduction

This machine is a dedicated turf spray application vehicle and is intended to be used by professional, hired operators in commercial applications. It is designed primarily for spraying on well-maintained lawns in parks, golf courses, sports fields, and on commercial grounds.

This machine is designed primarily for off-road use and is not intended for extensive driving on public roads. Using this product for purposes other than its intended use could prove dangerous to you and bystanders.

Read this information carefully to learn how to operate and maintain your product properly and to avoid injury and product damage. You are responsible for operating the product properly and safely.

Visit www.Toro.com for more information, including safety tips, training materials, accessory information, help finding a dealer, or to register your product.

Whenever you need service, genuine Toro parts, or additional information, contact an Authorized Service Dealer or Toro Customer Service and have the model and serial numbers of your product ready. Figure 1 identifies the location of the model and serial numbers on the product. Write the numbers in the space provided.

With your mobile device, you can scan the QR code on the serial number decal (if equipped) to access warranty, parts, and other product information.

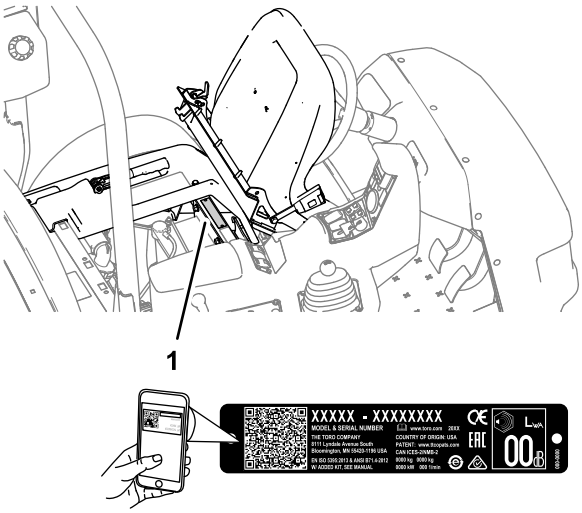

Figure 1

1. Model and serial number location

© 2026—The Toro® Company
8111 Lyndale Avenue South
Bloomington, MN 55420

Contact us at www.Toro.com.
Printed in the USA
All Rights Reserved

Model No.	_____
Serial No.	_____

This manual identifies potential hazards and has safety messages identified by the safety-alert symbol (Figure 2), which signals a hazard that may cause serious injury or death if you do not follow the recommended precautions.

g000502

Figure 2

1. Safety-alert symbol

This manual uses 2 words to highlight information. **Important** calls attention to special mechanical information and **Note** emphasizes general information worthy of special attention.

Contents

Safety 4
General Safety 4
Safety and Instructional Decals 5
Setup 12
1 Installing the Anti-Siphon Fill Receptacle 12
Product Overview 14
Controls 16
Specifications 20
Attachments/Accessories 20
Before Operation 20
Before Operation Safety 20
Preparing the Machine 22
Preparing the Sprayer 22
Locating the Spray Pump 30
During Operation 31
During Operation Safety 31
Radio Clip 32
Operating the Machine 32
Operating the Sprayer 33
Positioning the Spray Sections 34
Spraying Tips 35
Unclogging a Nozzle 35
After Operation 35
After Operation Safety 35
Cleaning the Sprayer 35
Maintenance 41
Maintenance Safety 41
Recommended Maintenance Schedule(s) 42
Daily Maintenance Checklist 43
Notation for Areas of Concern 44
Pre-Maintenance Procedures 44
Raising the Sprayer 44
Lubrication 45
Greasing the Machine 45
Greasing the Sprayer Pump 45
Greasing the Section Hinges 46
Engine Maintenance 46
Engine Safety 46
Checking the Air-Intake Screen 46
Servicing the Air Cleaner 46
Servicing the Engine Oil 47
Changing the Spark Plugs 48
Fuel System Maintenance 49
Replacing the Fuel Filter 49
Servicing the Carbon Canister 49
Draining the Fuel Tank 50
Electrical System Maintenance 50
Electrical System Safety 50
Locating the Fuses 50
Servicing the Battery 50
Drive System Maintenance 52
Inspecting the Wheels and Tires 52
Adjusting the Differential-Lock Cable 52
Adjusting the Front Wheel Toe-in 53
Brake Maintenance 54
Checking the Brake Fluid 54
Inspecting the Brakes 54
Adjusting the Parking Brake 54
Hydraulic System Maintenance 55
Hydraulic System Safety 55
Hydraulic Fluid Specification 55
Checking the Transaxle/Hydraulic Fluid 55
Changing Transaxle/Hydraulic Fluid 55
Replacing the Hydraulic Filter 56
Checking the Hydraulic Lines and Hoses 56
Spray System Maintenance 57
Inspecting the Hoses 57
Changing the Suction Filter 57
Changing the Pressure Filter 57
Changing the Nozzle Filter 58
Inspecting the Pump 58
Inspecting the Nylon Pivot Bushings 59
Adjusting the Booms to Level 59
Cleaning 60
Cleaning the Flow Meter 60
Storage 62
Storage Safety 62
Preparing the Spray System 62
Performing the Service Procedures 62
Preparing the Engine and Battery 62
Preparing the Machine 63
Troubleshooting 64
Schematics 67

Safety

Improper use or maintenance by the operator or owner can result in injury. To reduce the potential for injury, comply with these safety instructions and always pay attention to the safety-alert symbol (Figure 2), which means *Caution*, *Warning*, or *Danger*—personal safety instruction. Failure to comply with the instruction may result in personal injury or death.

General Safety

This product is capable of causing personal injury. Always follow all safety instructions to avoid serious personal injury.

- Read and understand the contents of this *Operator's Manual* before starting the engine.
- Use your full attention while operating the machine. Do not engage in any activity that causes distractions; otherwise, injury or property damage may occur.
- Use appropriate personal protective equipment (PPE) to guard against contact with chemicals. Chemical substances used in the sprayer system may be hazardous and toxic.
- Do not put your hands or feet near moving components of the machine.
- Do not operate the machine without all guards and other safety protective devices in place and working on the machine.
- Keep clear of any discharge area of the sprayer nozzles and spray drift. Keep bystanders and children out of the operating area.
- Never allow children to operate the machine.
- Park the machine on a level surface, engage the parking brake, shut off the engine, remove the key (if equipped), and wait for all movement to stop before you leave the operator's position. Allow the machine to cool before adjusting, servicing, cleaning, or storing it.

Improperly using or maintaining this machine can result in injury. To reduce the potential for injury, comply with these safety instructions and always pay attention to the safety-alert symbol ⚠, which means Caution, Warning, or Danger—personal safety instruction. Failure to comply with these instructions may result in personal injury or death.

Not all the attachments that adapt to this machine are covered in this manual. Refer to the operator's manual provided with each attachment for additional safety instructions.

Safety and Instructional Decals

Safety decals and instructions are easily visible to the operator and are located near any area of potential danger. Replace any decal that is damaged or missing.

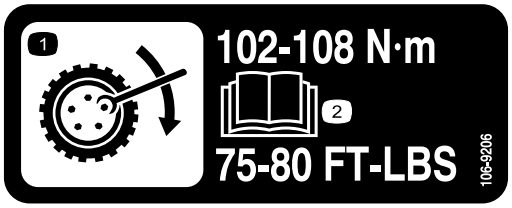

decal106-9206

106-9206

1. Wheel torque specifications
2. Read the *Operator's Manual*.

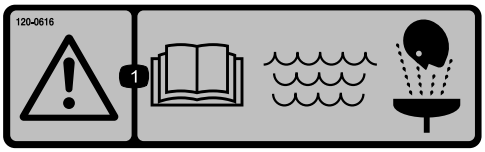

decal120-0616

120–0616

1. Warning—read the *Operator's Manual*; use fresh, clean water for first-aid washing.

decal120-0617

120-0617

1. Pinch point—keep hands away from the hinge.
2. Crushing hazard, boom—keep bystanders away.

decal120-0622

120–0622

1. Warning—read the *Operator's Manual*.
2. Warning—do not enter the sprayer tank.
3. Chemical burn hazard; toxic gas inhalation hazard—wear hand and skin protection; wear eye and respiratory protection.

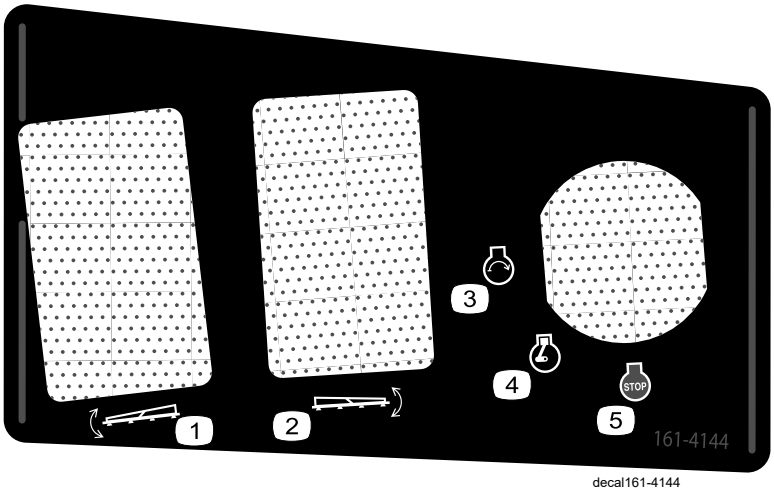

decal161-4144

161-4144

1. Raise/lower left section
2. Raise/lower right section
3. Engine—start
4. Engine—run
5. Engine—shut off

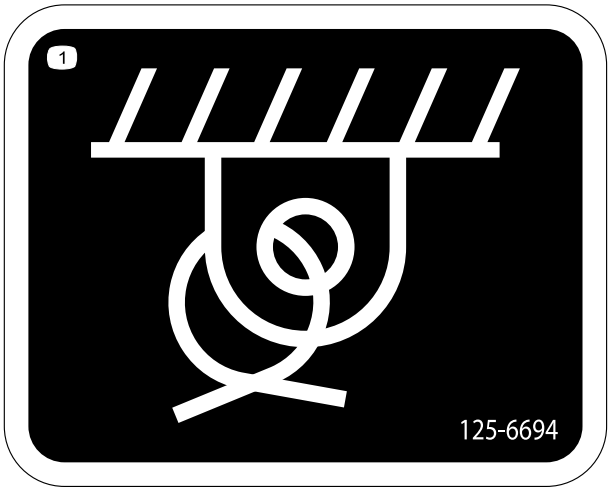

decal125-6694

125–6694

1. Tie down location

decal133-8062

133-8062

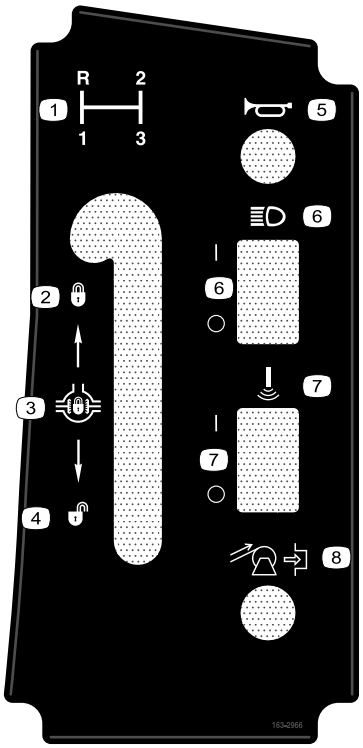

decal163-2966

163-2966

1. Gear selection
2. Lock—differential lock
3. Differential lock
4. Unlock—differential lock
5. Horn
6. Headlights—On/Off
7. Sonic Boom—On/Off
8. Rewind hose reel (optional)

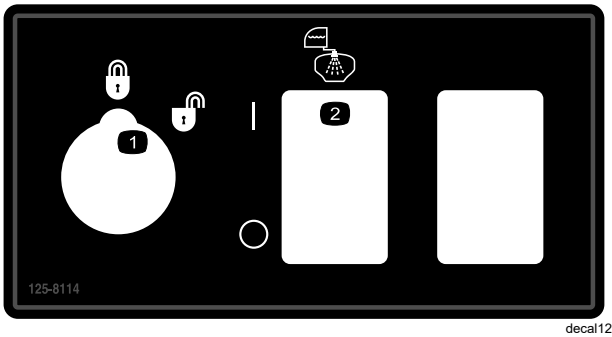

decal125-8114

125–8114

1. Rate lockout locked/unlocked
2. Toggle rinse pump on/off

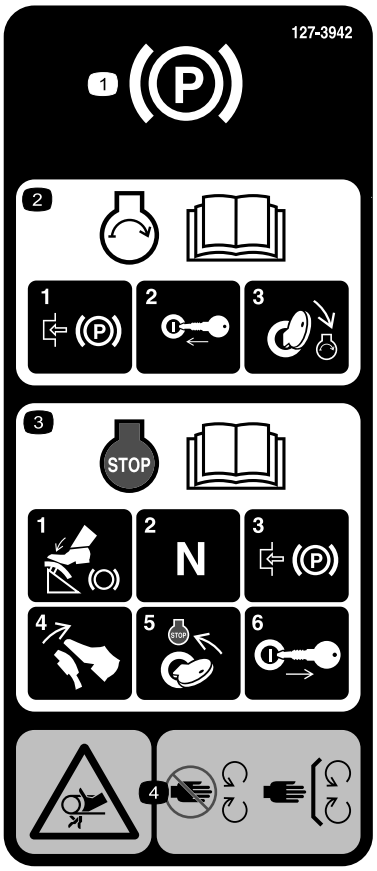

decal127-3935

127–3935

1. Parking brake
2. For information on starting the engine, read the *Operator's Manual*—1) Engage the parking brake; 2) Insert the key into the ignition; 3) Turn the key to the engine run position.
3. For information on shutting off the engine, read the *Operator's Manual*—1) Press down on the brake pedal; 2) Set the gear to neutral; 3) Engage the parking brake; 4) Release the brake pedal; 5) Turn the ignition key to STOP position; 6) Remove the key from the ignition.
4. Entanglement hazard, belt—keep away from moving parts; keep all guards and shields in place.

decal127-3937

127–3937

1. Warning—do not step.
2. Warning—keep away from hot surfaces.
3. Entanglement hazard, belt—keep away from moving parts; keep all guards and shields in place.

decal127-3939

127–3939

1. Warning—read the *Operator's Manual*; always wear a seat belt when operating the machine; do not tip the machine.
2. Falling hazard—do not carry passengers on the sprayer tank.
3. Cutting/dismemberment hazard—keep arms and legs inside the machine at all times.
4. Warning—do not drill, weld, or alter the ROPS system.

decal127-6976

127-6976

1. Decrease
2. Increase

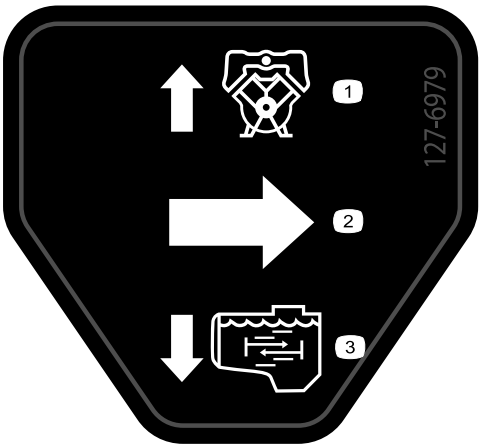

decal127-6979

127-6979

1. Bypass-return flow
2. Flow
3. Agitation flow

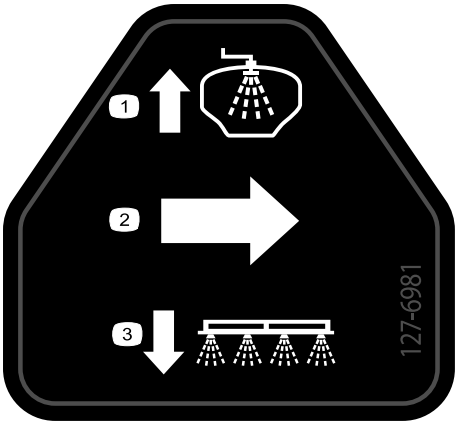

decal127-6981

127-6981

1. Bypass-return flow
2. Flow
3. Boom spray

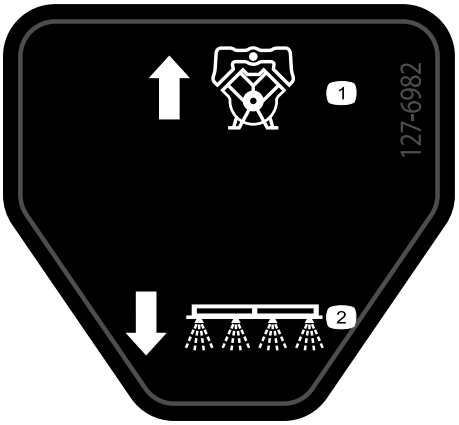

decal127-6982

127-6982

1. Bypass-return flow
2. Boom spray

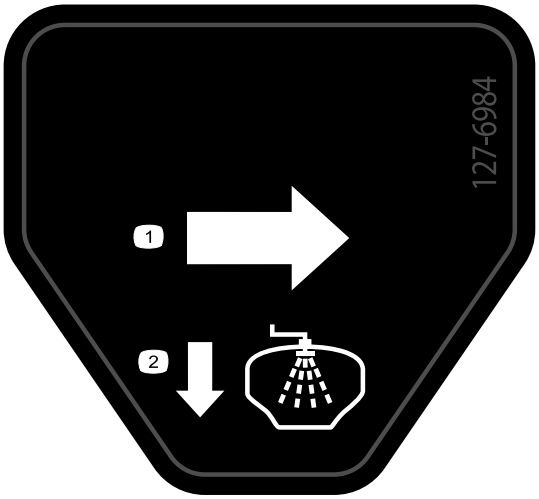

decal127-6984

127-6984

1. Flow
2. Tank-return flow

---

decal130-8293

130-8293

1. Sprayer off
2. Sprayer on
3. Engine on
4. Engine off
5. Increase speed
6. Decrease speed
7. Agitation on
8. Agitation off

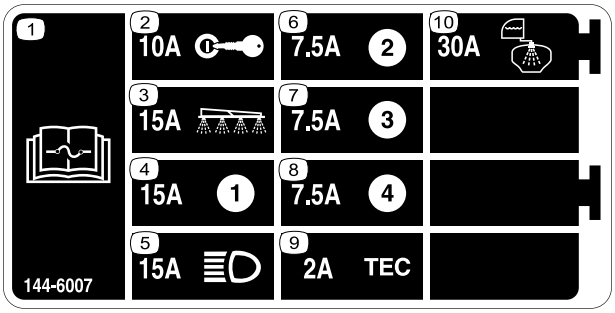

decal144-6007

144-6007

1. Read the *Operator's Manual* for information on fuses.
2. 10 A—Ignition
3. 15 A—Sprayer section
4. 15 A
5. 15 A—Headlights
6. 7.5 A
7. 7.5 A
8. 7.5 A
9. 2 A—TEC
10. 30 A—Rinse tank

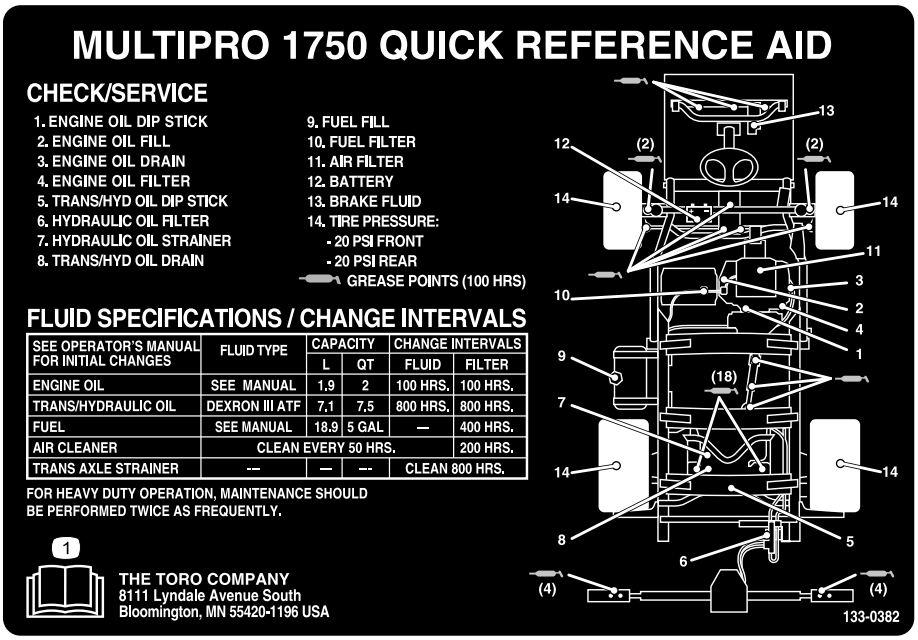

decal133-0382

133-0382

1. Read the *Operator's Manual* for more information about maintenance.

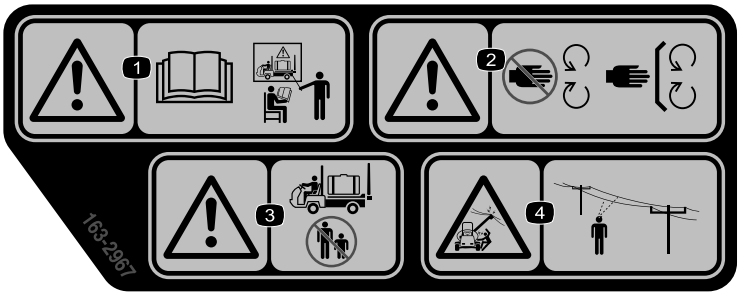

decal163-2967

163-2967

1. Warning—do not operate the machine without proper training; read the *Operator's Manual*.Warning—
2. Warning—keep away from moving parts; keep all guards and shields in place.
3. Warning—keep bystanders away when operating the machine.
4. Electrical shock hazard, overhead power lines—check the area for overhead power lines before operating the machine in the area.

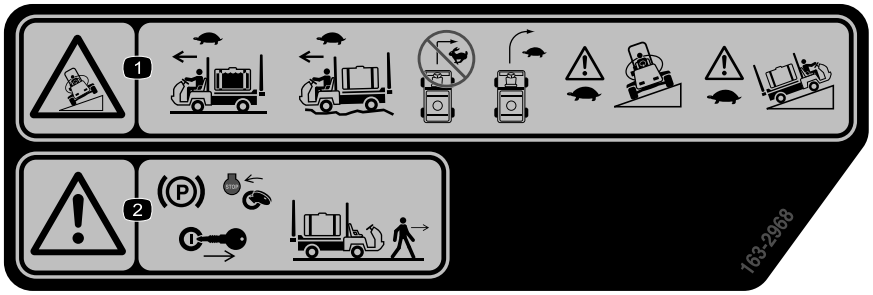

decal163-2968

163-2968

1. Tipping hazard—Move slowly when the sprayer tank is full; move slowly when driving over rough terrain; do not turn at high speed; turn slowly; drive slowly when driving across or up slopes.
2. Warning—Engage the parking brake, shut off the engine, and remove the key from the ignition before leaving the machine.

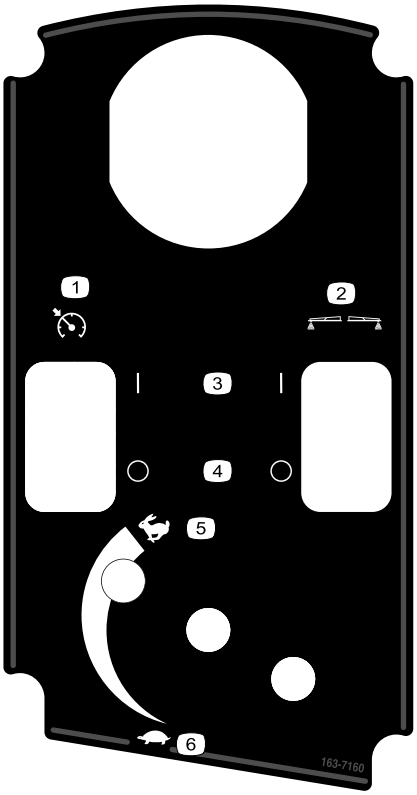

decal163-7160

163-7160

1. Throttle/Speed lock
2. Foam markers (optional kit)
3. On
4. Off
5. Throttle—fast
6. Throttle—slow

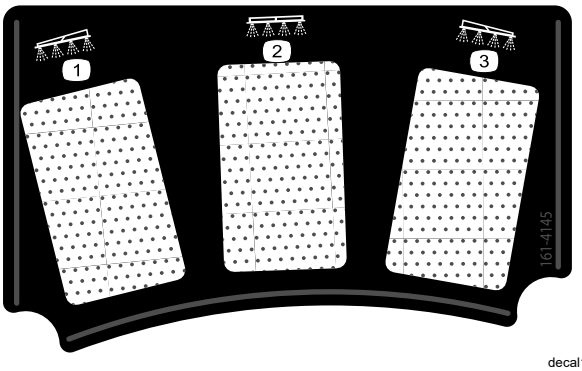

decal161-4145

161-4145

1. Left section
2. Center section
3. Right section

Setup

Media and Additional Parts

Description	Qty.	Use
Starter key	2	Read the manuals and watch the training materials before operating the machine.
Operator's Manual	1	
Engine owner's manual	1	
Parts Catalog Instruction Card	1	
Operator training materials	1	
Screen filter	2	

Note: Determine the left and right sides of the machine from the normal operating position.

Note: If you have questions or need additional information regarding the spray control system, refer to the *Operator's Manual* supplied with the system.

Important: **This sprayer is sold without spray nozzles.**

To use the sprayer, *you must obtain and install the nozzles*. Contact your authorized Toro distributor for information on the available section kit and accessories.

After you install the nozzles and before using the sprayer for the first time, calibrate the sprayer flow and calibrate the section bypass valves so that the pressure and application rate remains the same for all sections when you turn 1 or more sections off. Refer to Calibrating the Sprayer Flow (page 27) and Calibrating the Section-Bypass Valves (page 28).

1

Installing the Anti-Siphon Fill Receptacle

Parts needed for this procedure:

1	90° fitting
1	Quick coupler
1	Hose adapter
1	Fill-receptacle bracket
1	Flange-head bolt (5/16 x 3/4 inch)
1	Anti-siphon hose

Procedure

1. Place the fill-receptacle bracket over the threaded hole in the tank and secure it with a flange-head bolt (5/16 x 3/4 inch) as shown in Figure 3.

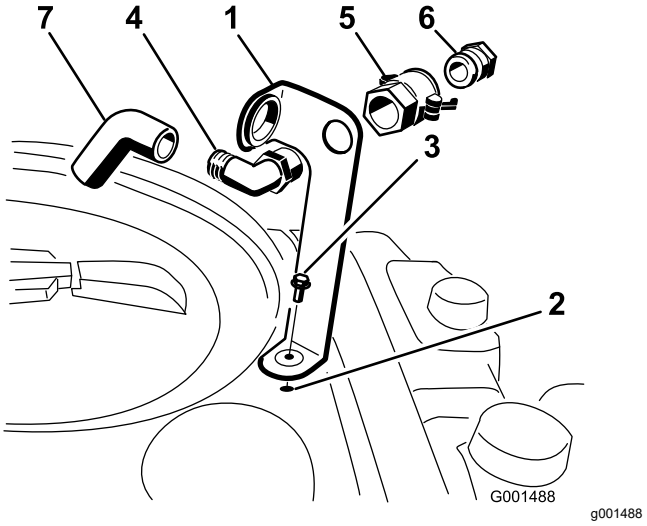

Figure 3

1. Fill-receptacle bracket
2. Threaded hole in the tank
3. Flange bolt (5/16 x 3/4 inch)
4. 90° elbow fitting
5. Quick coupler
6. Hose adapter
7. Anti-siphon hose

2. Place the threaded end of the 90° elbow fitting through the bracket and thread the quick coupler onto it, securing it to the bracket (Figure 3).

   Note: Install the fitting with the open end pointing toward the large opening in the bracket

and toward the tank opening so that the water arcs into the tank when you fill it.

3. Install the hose adapter into the quick coupler (Figure 3).
4. Lock the adapter into place by swinging the levers toward the adapter and then secure them with the hairpin cotters (Figure 3).
5. Install the anti-siphon hose through the large opening on the bracket and onto the barbed end of the 90° elbow fitting (Figure 3).

   Important: **Do not lengthen the hose to allow contact with the tank fluids.**

Product Overview

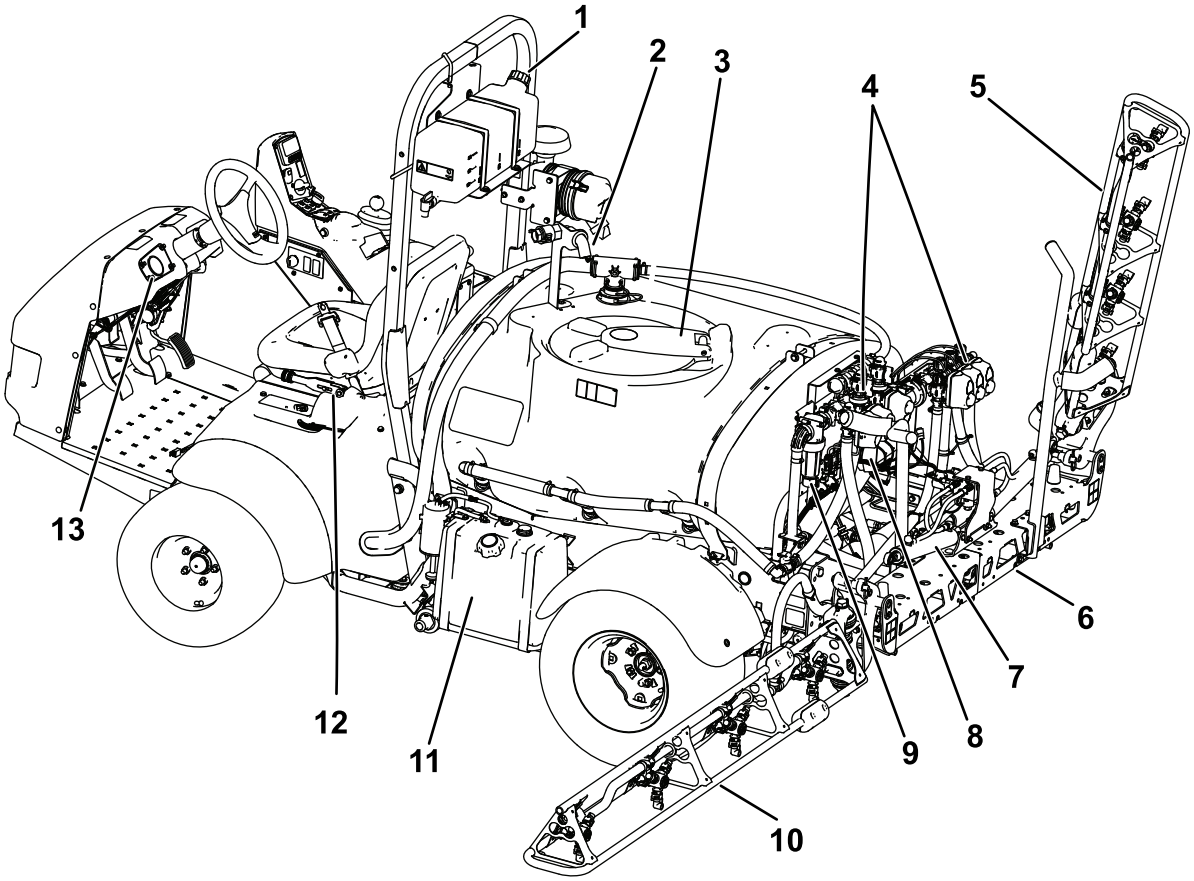

Figure 4

1. Roll bar
2. Anti-siphon receptacle
3. Chemical-tank lid
4. Valve manifolds
5. Right section
6. Center section
7. Section-control cylinder
8. Agitation-throttle valve
9. Pressure filter
10. Left section
11. Fuel tank
12. Parking brake
13. Pressure Gauge

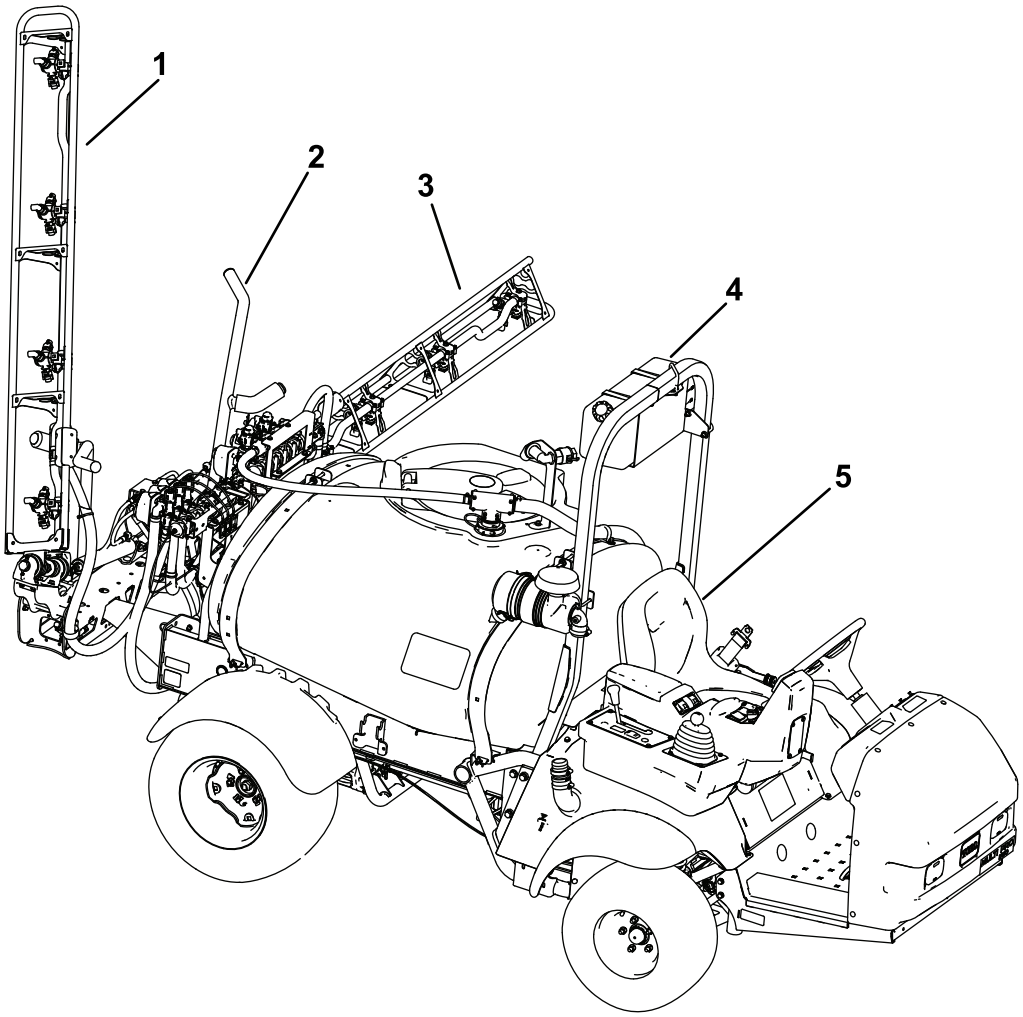

g580112

Figure 5

1. Right section
2. Boom-transport cradle
3. Left section
4. Fresh-water tank
5. Operator's seat

Controls

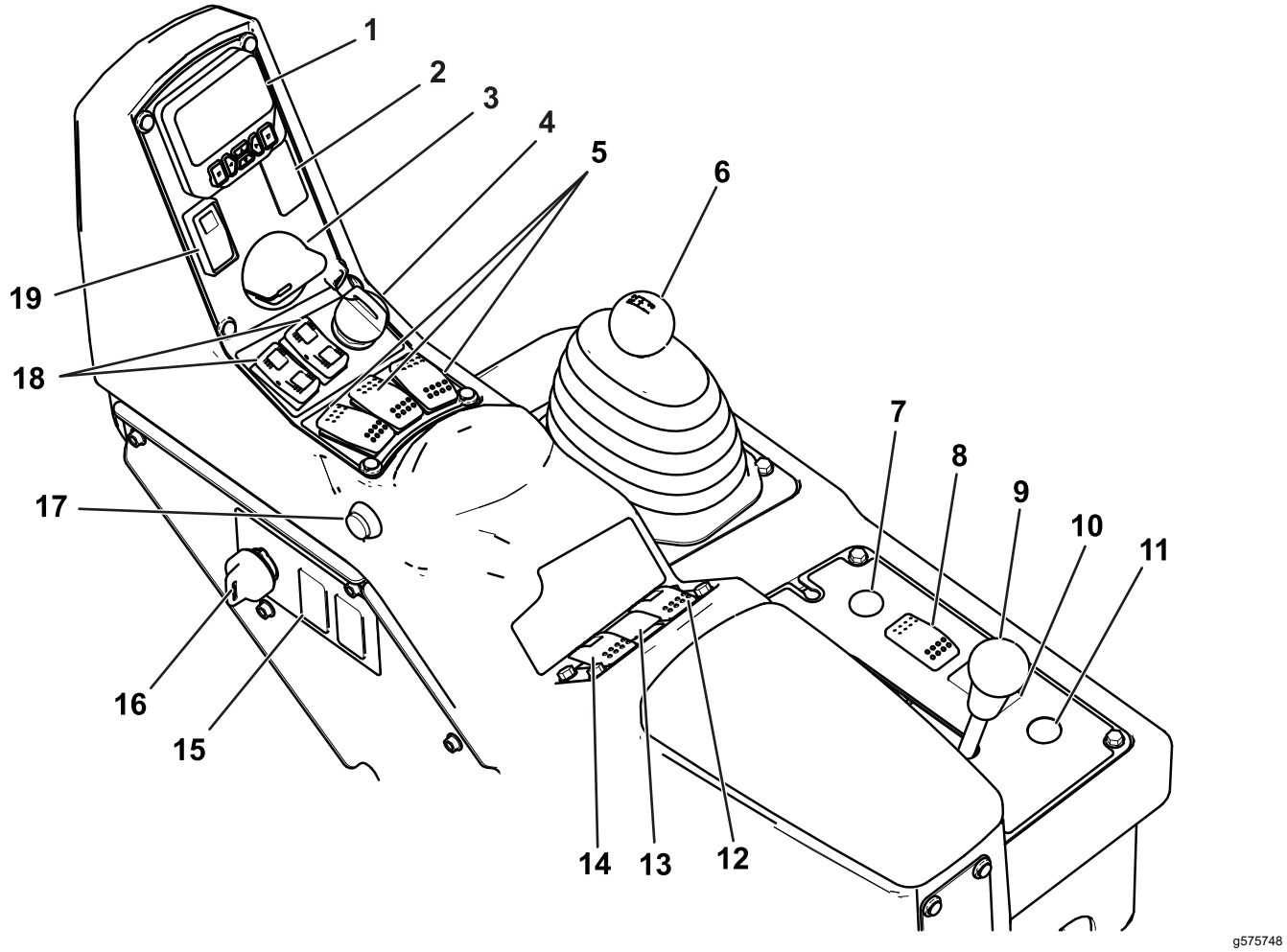

Figure 6

1. InfoCenter	6. Range selector	11. Hose-reel-rewind button (optional)	16. Supervisor (rate-lockout) switch
2. Foam-marker switch (optional)	7. Horn	12. Agitation switch	17. Master section switch
3. Engine speed dial	8. Headlight switch	13. Spray-pressure switch	18. Boom-section lift switches
4. Engine switch	9. Differential lock	14. Spray-pump switch	19. Throttle/Speed lock switch
5. Left, center, and right section switches	10. Sonic-boom switch (optional)	15. Rinse-tank switch (optional)	

Accelerator Pedal

Press the pedal to increase ground speed. Release the pedal to slow ground speed and reduce the engine speed to idle.

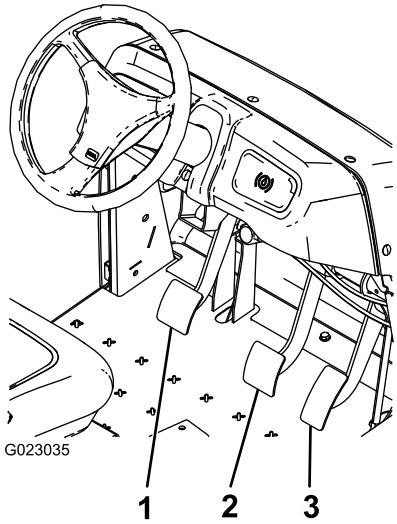

g023035

Figure 7

1. Clutch pedal
2. Brake pedal
3. Accelerator pedal

Clutch Pedal

Fully press the clutch pedal to disengage the clutch when starting the engine or shifting transmission gears. Release the pedal smoothly when the transmission is in gear to prevent unnecessary wear on the transmission and other related parts.

Important: **Do not ride the clutch pedal during operation. You must fully release the clutch pedal, or the clutch will slip—causing heat and wear. Never use the clutch to hold the machine stopped on a hill; you may damage the clutch.**

Brake Pedal

Use the brake pedal to stop or slow the sprayer.

⚠ CAUTION

Brakes can become worn or can be adjusted incorrectly resulting in personal injury.

If you can press the brake pedal to within 2.5 cm (1 inch) of the floorboard, adjust or repair the brakes.

Parking Brake

Pull up and back on the lever to engage the parking brake.

Push the lever forward and down to disengage the parking break.

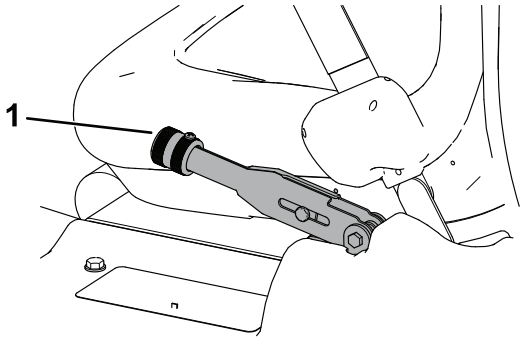

g580113

Figure 8

1. Parking brake lever

Hill Assist

Hill assist prevents the sprayer from rolling or jerking by temporarily holding the sprayer on hilly terrain when you move your foot from the brake pedal to the accelerator pedal. To engage hill assist, engage the clutch and push down on the brake pedal firmly. When hill assist is engaged, the hill assist icon appears on the InfoCenter; refer to the *Multi Pro 1750 Turf Sprayer Software Guide*. Hill assist holds the machine for 2 seconds after releasing the brake pedal.

Note: The hill assist only temporarily holds the machine: you cannot use it in place of the parking brake.

Differential Lock

The differential lock allows you to lock the rear axle for increased traction. You may engage the differential lock while the sprayer is in motion.

Move the lever forward and to the right to engage the lock.

Note: You may need to drive the machine forward while turning slightly to engage or disengage the differential lock.

The differential lock increases the traction of the sprayer by locking the rear wheels so that 1 wheel does not spin out. This can help when you have heavy loads to haul on wet turf or slippery areas, going up hills, and on sandy surfaces. It is important to remember, however, that this extra traction is intended for temporary or limited use. Its use does not replace the safe operation, already discussed concerning steep hills and heavy loads.

The differential lock causes the rear wheels to turn at the same speed. When using differential lock your ability to make sharp turns is somewhat restricted and

the tires may scuff the turf. Use the differential lock only when needed, at slower speeds and only in first or second gear.

⚠ WARNING

Tipping or rolling the sprayer on a hill will cause serious injury.

- **The extra traction available with the differential lock can be enough to get you into dangerous situations, such as climbing slopes that are too steep to turn around. Be extra careful when operating with the differential lock on, especially on steeper slopes.**
- **If the differential lock is on when making a sharp turn at a higher speed and the inside rear wheel lifts off the ground, there may be a loss of control which could cause the sprayer to skid. Use the differential lock only at slower speeds.**

Range Selector

The range selector has 5 positions: 3 forward speeds, NEUTRAL, and REVERSE.

Put the control in the NEUTRAL position to start the machine.

Ignition Switch

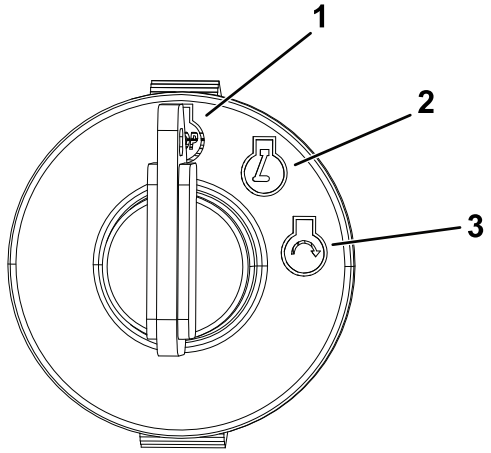

g375755

Figure 9

1. Stop engine
2. Run engine
3. Start engine

Throttle/Speed Lock

When the range selector is in the NEUTRAL position, you can use the engine speed dial to set the engine to high idle speed. This is necessary to run the chemical agitation while stationary or operating attachments such as the hand sprayer.

Push the top of switch to enable this function. Rotate the engine speed dial to increase or decrease the engine speed.

To set the throttle lock (stationary operation), the range selector control must be in the NEUTRAL position and the parking brake must be engaged.

To set the speed lock (operation while moving), the range selector control must not be in the NEUTRAL position and the operator must be in the seat.

Fuel Gauge

The fuel gauge is located on top of the fuel tank, on the left side of the machine, and shows the amount of fuel in the tank.

Master Section Switch

Press the switch to enable or disable the spray system.

Left, Center, and Right Section Switches

Toggle each switch forward to turn the corresponding section on and rearward to turn them off. When the switch is turned on, a light on the switch illuminates. These switches affect the spray system only when the master section switch is on.

Pump Switch

Toggle this switch forward to run the pump or rearward to stop the pump.

Important: **The pump switch engages only when the engine is at low idle to avoid damaging the pump drive.**

Application-Rate Switch

Press and hold the switch forward to increase the spray system pressure, or press and hold it rearward to decrease the pressure.

Supervisor (Rate-Lockout) Switch

Turn the key counterclockwise to the LOCK position to disable the application-rate switch, thereby keeping anyone from accidentally changing the application rate. Turn the key clockwise to the UNLOCKED position to enable the application-rate switch.

Boom-Section Lift Switches

The boom-section lift switches are located on the control panel and are used to raise the outer boom sections.

Hour Meter

The hour meter indicates the total number of hours the engine has run. This number is displayed on the first screen of the InfoCenter. The hour meter starts to function whenever the key is turned to the RUN position.

Foam-Marker Switch Locations (Optional)

If you install the Foam Marker Kit, you will add switches to the control panel for controlling their operation. The sprayer comes with plastic plugs in these locations.

Regulating (Rate-Control) Valve

This valve, located behind the tank, controls the amount of fluid routed to the sections or the rate return to the tank.

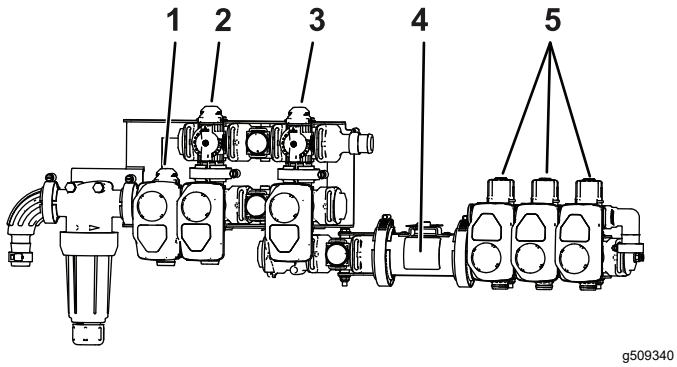

Figure 10

1. Regulating (rate-control) valve
2. Agitation valve
3. Master section valve
4. Flow meter
5. Section valves

Master-Section Valve

The master-section valve controls the flow to the flow meter and section valves.

Flow meter

The flow meter measures the flow rate of the fluid for use by the InfoCenter system.

Section Bypass Valves

These valves turn the right, center, and left sections on or off.

Section-Bypass Shutoff Valve

The section bypass shutoff valve redirects the fluid flow for a section to the tank when you turn off the section. You can adjust the section bypass to ensure that the section pressure remains constant no matter how many sections are on. Refer to Calibrating the Section-Bypass Valves (page 28).

Agitation Valve

This valve is located on the rear of the tank . When agitation is on, the flow is directed through the agitation nozzles in the tank. When agitation is off, the flow is directed through the pump suction.

Pressure Gauge

The pressure gauge is located on the dash panel. This gauge shows the pressure of the fluid in the system in psi and kPa.

InfoCenter LCD Display

The InfoCenter LCD display shows information about your machine and battery pack, such as the current battery charge, the speed, diagnostics information, and more.

For more information, refer to the Multi Pro 1750 *Software Guide*.

Agitation-Throttle Valve

The agitation-throttle valve is used to reduce the flow available for the agitation circuit. It provides additional flow for the sections.

Specifications

Note: Specifications and design are subject to change without notice.

Weight with standard spray system, empty, without operator	953 kg (2,100 lb)
Weight with standard spray system, full, without operator	1678 kg (3,700 lb)
Maximum gross vehicle weight (GVW) (on level ground)	1814 kg (4,000 lb)
Overall length with standard spray system	343 cm (135 inches)
Overall height with standard spray system	191 cm (75 inches)
Overall height with standard spray system to the top of the sections stored in the X position	246 cm (97 inches)
Overall width with standard spray system sections stored in the 'X' position	178 cm (70 inches)
Ground clearance	14 cm (5.5 inches)
Wheelbase	155 cm (61 inches)
Tank capacity (includes the CE 5% overflow)	662 L (175 US gallons)

Attachments/Accessories

A selection of Toro approved attachments and accessories is available for use with the machine to enhance and expand its capabilities. Contact your authorized Toro distributor.

To ensure optimum performance and continued safety certification of the machine, use only genuine Toro replacement parts and accessories. Replacement parts and accessories made by other manufacturers could be dangerous, and such use could void the product warranty.

Operation

Note: Determine the left and right sides of the machine from the normal operating position.

Before Operation

Before Operation Safety

General Safety

- Never allow children or untrained people to operate or service the machine. Local regulations may restrict the age of the operator. The owner is responsible for training all operators and mechanics.
- Become familiar with the safe operation of the equipment, operator controls, and safety signs.
- Before you leave the operator's position, do the following:
  - Park the machine on a level surface.
  - Shift the transmission into the NEUTRAL position (manual) or the PARK position (automatic).
  - Engage the parking brake.
  - Shut off the engine and remove the key (if equipped).
  - Wait for all movement to stop.
- Know how to stop the machine and shut off the engine quickly.
- Check that operator-presence controls, safety switches, and guards are attached and functioning properly. Do not operate the machine unless they are functioning properly.
- If the machine does not function correctly or is damaged in any way, do not use the machine. Correct the problem before you operate the machine or attachment.
- Ensure that all fluid line connectors are tight and that all hoses are in good condition before applying pressure to the system.

Fuel Safety

- Use extreme care in handling fuel. It is flammable and its vapors are explosive.
- Extinguish all cigarettes, cigars, pipes, and other sources of ignition.
- Use only an approved fuel container.
- Do not remove the fuel cap or fill the fuel tank while the engine is running or hot.
- Do not add or drain fuel in an enclosed space.

- Do not store the machine or fuel container where there is an open flame, spark, or pilot light, such as on a water heater or other appliance.
- If you spill fuel, do not attempt to start the engine; avoid creating any source of ignition until the fuel vapors have dissipated.

Chemical Safety

Chemical substances used in the sprayer system may be hazardous and toxic to you, bystanders, and animals, and they may damage plants, soil, and other property.

- Read the information on each chemical. Refuse to operate or work on the sprayer if this information is not available.
- Before working on a sprayer system, ensure that it has been neutralized and triple rinsed according to the recommendations of the chemical manufacturer(s) and that all the valves have been cycled 3 times.
- Verify that there is an adequate supply of clean water and soap nearby, and immediately wash off any chemicals that contact you.
- Carefully read and follow the chemical warning labels and safety data sheets (SDSs) for all chemicals used, and protect yourself according to the chemical manufacturer's recommendations.
- Always protect your body while using chemicals. Use the appropriate personal protective equipment (PPE) to guard against contact with chemicals, such as the following:
  - safety glasses, goggles, and/or face shield
  - a chemical suit
  - a respirator or filter mask
  - chemical-resistant gloves
  - rubber boots or other substantial footwear
  - a clean change of clothes, soap, and disposable towels for cleanup
- Obtain proper training before using or handling chemicals.
- Use the correct chemical for the job.
- Follow the chemical manufacturer's instructions for the safely applying the chemical. Do not exceed the recommended system application pressure.
- Do not fill, calibrate, or clean the machine while people, especially children, or pets are in the area.
- Handle chemicals in a well-ventilated area.
- Do not eat, drink, or smoke while working near chemicals.
- Do not clean spray nozzles by blowing through them or placing them in your mouth.
- Always wash your hands and other exposed areas as soon as possible after working with chemicals.
- Keep chemicals in their original packages and stored in a safe location.
- Properly dispose of unused chemicals and chemical containers as instructed by the chemical manufacturer and your local codes.
- Chemicals and fumes are dangerous; never enter the tank or place your head over or in the opening of a tank.
- Follow all local, state, and federal regulations for spreading or spraying chemicals.

Preparing the Machine

Checking the Engine Oil

The engine is shipped with oil in the crankcase; however, the level of oil must be checked before you first start the engine and after you have run it.

1. Position the machine on a level surface.
2. Remove the dipstick and wipe it with a clean rag.
3. Insert the dipstick into the tube and make sure that it is seated fully. Remove the dipstick and check the oil level.
4. If the oil level is low, remove the filler cap from the valve cover and pour oil into the opening until the oil level is up to the FULL mark on the dipstick; refer toEngine Maintenance (page 46) for the proper oil type and viscosity.

   Note: Add the oil slowly and check the level often during this process. Do not overfill.
5. Install the dipstick firmly in place.

Checking the Air Pressure in the Tire

Service Interval: Before each use or daily—Check the air pressure in the tires every 8 hours or daily.

Fill the tires with air to 138 kPa (20 psi). Also, check the tires for wear or damage.

Note: Replace any worn or damaged tires.

Adding Fuel

Fuel Specification

Petroleum fuel	Use unleaded gasoline with an octane rating of 87 or higher ((R+M)/2 rating method).
Ethanol blended fuel	Use an unleaded-gasoline blend with up to 10% ethanol (gasohol) or 15% MTBE (methyl tertiary butyl ether) by volume is acceptable. Ethanol and MTBE are not the same. Gasoline with 15% ethanol (E15) by volume is not approved for use. Never use gasoline that contains more than 10% ethanol by volume, such as E15 (contains 15% ethanol), E20 (contains 20% ethanol), or E85 (contains up to 85% ethanol). Using unapproved gasoline may cause performance problems and/or engine damage which may not be covered under warranty.

Important: **For best results, use only clean, fresh fuel (less than 30 days old).**

- Do not use gasoline containing methanol.
- Do not store fuel either in the fuel tank or fuel containers over the winter unless you use a fuel stabilizer.
- Do not add oil to gasoline.

Filling the Fuel Tank

The fuel tank capacity is approximately 19 L (5 US gallons).

Note: The fuel-tank cap contains a gauge that shows the fuel level; check it frequently.

1. Park the machine on a level surface, engage the parking brake, shut off the engine, and remove the key.
2. Clean the area around the fuel-tank cap (Figure 11).

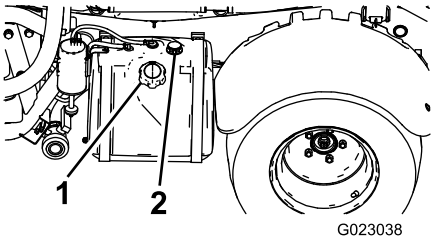

g023038

Figure 11

1. Fuel-tank cap
2. Fuel gauge

3. Remove the fuel-tank cap.
4. Fill the tank to about 2.5 cm (1 inch) below the top of the tank (bottom of the filler neck).

   Note: This air space in the tank allows fuel to expand. Do not overfill the tank.
5. Install the fuel-tank cap to the tank securely.
6. Wipe up any spilled fuel.

Preparing the Sprayer

Selecting a Nozzle

Note: Refer to the nozzle-selection guide that is available through your authorized Toro distributor.

The nozzle-turret bodies can accept up to 3 different nozzles. To select the desired nozzle, perform the following:

1. Stop the sprayer on a level surface, shut off the engine, and engage the parking brake.
2. Set the master section switch to the OFF position and set the spray-pump switch to the OFF position.

3. Rotate the turret of the nozzles in either direction to the correct nozzle.
4. Perform a sprayer flow calibration.
5. Perform a section bypass valve calibration.

Selecting a Suction Filter

Standard Equipment: 50 mesh suction filter (blue)

Use the suction filter table to identify the screen mesh for the spray nozzles you are using based on chemicals products or solutions with a viscosity equivalent to water.

Suction Filter Table

Spray Nozzle Color Code (flow rate)	Screen Mesh Size*	Filter Color Code
Yellow (0.2 gpm)	50	Blue
Red (0.4 gpm)	50	Blue
Brown (0.5 gpm)	50 (or 30)	Blue (or green)
Gray (0.6 gpm)	30	Green
White (0.8 gpm)	30	Green
Blue (1.0 gpm)	30	Green
Green (1.5 gpm)	30	Green
*The mesh size of the suction filters in this table are based on spray chemicals or solutions with the viscosity equivalent to water.		

Important: **When you spray with higher viscosity (thicker) chemical products or solutions with wettable powders, you may need to use a coarser screen mesh for the optional suction filter; refer to Figure 12.**

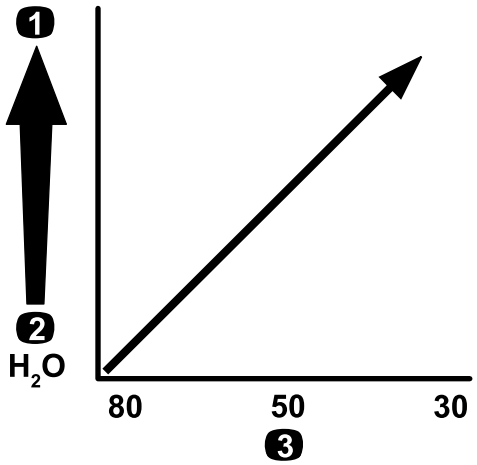

g214212

Figure 12

Mesh size—chemical or solution viscosity

1. Higher-viscosity chemicals or solutions
2. Lower-viscosity chemicals or solutions
3. Screen mesh size

When you spray at a higher application rate, consider using a courser optional suction-filter mesh; refer to Figure 13.

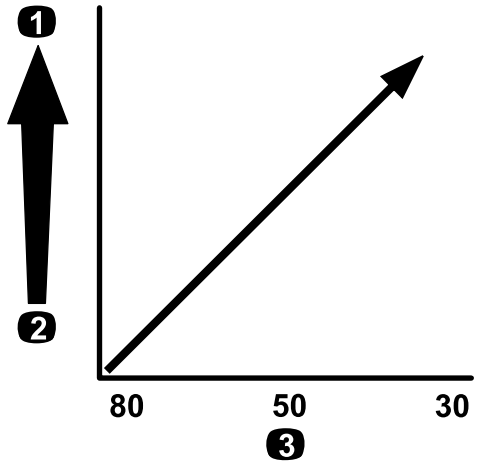

g214214

Figure 13

Mesh size—application rate

1. Higher application rate
2. Lower application rate
3. Screen mesh size

Selecting a Pressure Filter

Available screen sizes include:

Standard Equipment: 50 mesh suction filter (blue)

Use the pressure filter table to identify the screen mesh for the spray nozzles you are using based on chemicals products or solutions with a viscosity equivalent to water.

Pressure Filter Table

Spray Nozzle Color Code (flow rate)	Screen Mesh Size*	Filter Color Code
As required for low viscosity chemicals or solutions or low application rates	100	Green
Yellow (0.2 gpm)	80	Yellow
Red (0.4 gpm)	50	Blue
Brown (0.5 gpm)	50	Blue
Gray (0.6 gpm)	50	Blue
White (0.8 gpm)	50	Blue
Blue (1.0 gpm)	50	Blue
Green (1.5 gpm)	50	Blue
As required for high viscosity chemicals or solutions or high application rates	30	Red

Pressure Filter Table (cont'd.)

Spray Nozzle Color Code (flow rate)	Screen Mesh Size*	Filter Color Code
As required for high viscosity chemicals or solutions or high application rates	16	Brown
*The mesh size of the pressure filters in this table are based on spray chemicals or solutions with the viscosity equivalent to water.		

Important: **When you spray with higher viscosity (thicker) chemical products or solutions with wettable powders, you may need to use a coarser screen mesh for the optional pressure-filter; refer to Figure 14.**

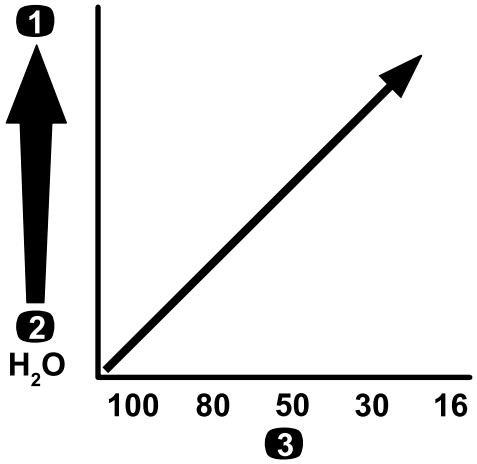

g214211

Figure 14

Mesh size—chemical or solution viscosity

1. Higher-viscosity chemicals or solutions
2. Lower-viscosity chemicals or solutions
3. Screen mesh size

When you spray at a higher application rate, consider using a courser optional pressure-filter mesh; refer to Figure 15.

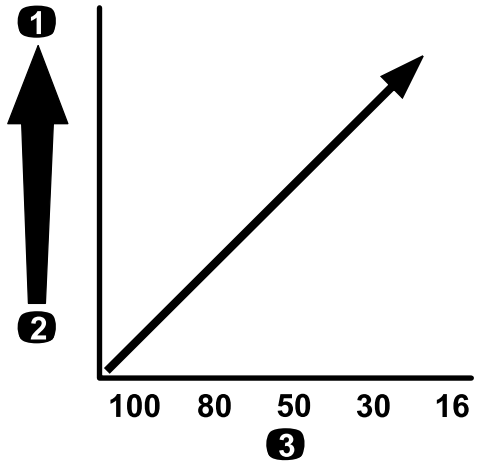

g214240

Figure 15

Mesh size—application rate

1. Higher application rate
2. Lower application rate
3. Screen mesh size

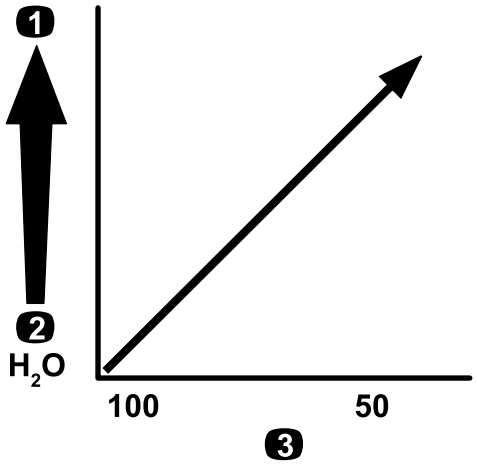

g214246

Figure 16

Mesh size—chemical or solution viscosity

1. Higher-viscosity chemicals or solutions
2. Lower-viscosity chemicals or solutions
3. Screen mesh size

Selecting a Nozzle-Tip Filter (Optional)

Note: The use the optional nozzle-tip filter to protect the spray-nozzle tip and increase its service life.

Use the nozzle-tip filter table to identify the screen mesh for the spray nozzles you are using based on chemicals products or solutions with a viscosity equivalent to water.

Nozzle-Tip Filter Table

Spray Nozzle Color Code (flow rate)	Filter Mesh Size*	Filter Color Code
Yellow (0.2 gpm)	100	Green
Red (0.4 gpm)	50	Blue
Brown (0.5 gpm)	50	Blue
Gray (0.6 gpm)	50	Blue
White (0.8 gpm)	50	Blue
Blue (1.0 gpm)	50	Blue
Green (1.5 gpm)	50	Blue
*The mesh size of the nozzle filters in this table are based on spray chemicals or solutions with the viscosity equivalent to water.		

Important: **When you spray with higher viscosity (thicker) chemical products or solutions with wettable powders, you may need to use a coarser screen mesh for the optional tip-filter; refer to Figure 16.**

When you spray at a higher application rate, consider using a courser tip-filter mesh; refer to Figure 17.

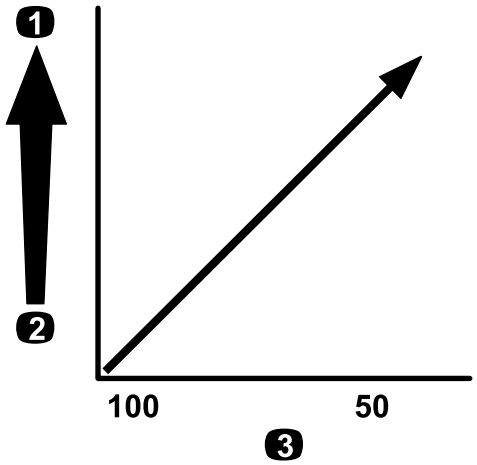

g214245

Figure 17

Mesh size—application rate

1. Higher application rate
2. Lower application rate
3. Screen mesh size

Filling the Tanks

Filling the Fresh-Water Tank

Important: **Do not use reclaimed water (gray water) in the fresh-water tank.**

Note: The fresh-water tank is used to supply a source of fresh water for you to wash chemicals off your skin, eyes, or other surfaces in the case of accidental exposure.

Always fill the fresh-water tank with clean water before handling or mixing any chemicals.

- To fill the tank, unscrew the cap at the top of the tank, fill the tank with fresh water, and install the cap (Figure 18).
- To open the fresh-water tank spigot, turn the lever on the spigot (Figure 18).

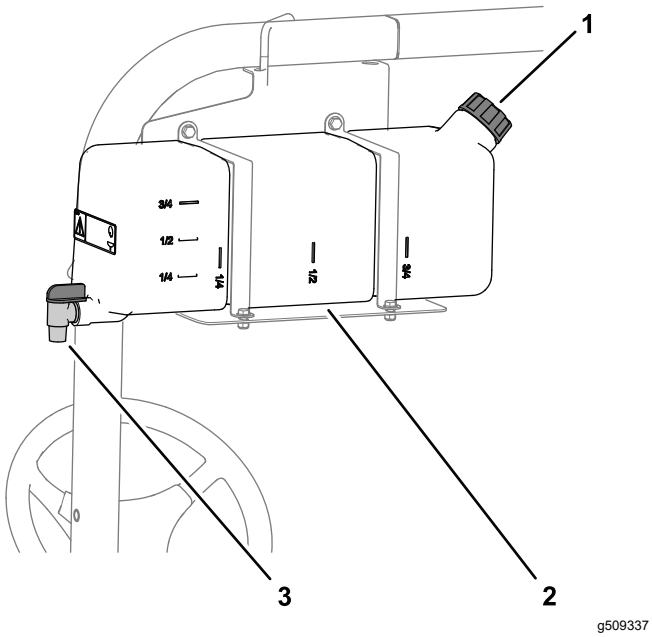

Figure 18

1. Filler cap
2. Fresh-water tank
3. Spigot

Filling the Spray Tank

Install the optional Chemical Pre-Mix Kit for optimal mixing and exterior tank cleanliness.

Important: **Whenever possible, do not use reclaimed water (gray water) in the spray tank.**

Important: **Ensure that the chemicals you will be using are compatible for use with Viton™ (see the manufacturer's label; it should indicate if it is not compatible). Using a chemical that is not compatible with Viton™ will degrade the O-rings in the sprayer, causing leaks.**

Important: **Verify that the proper application rate has been set prior to filling the tank with chemicals.**

1. Purge the spray system of spray-system conditioner by running the sections.
2. Stop the sprayer on a level surface, move the range selector to the NEUTRAL position, shut off the engine, and engage the parking brake.
3. Ensure that the tank drain valve is closed.
4. Determine the amount of water needed to mix the amount of chemical you need as prescribed by the chemical manufacturer.
5. Open the tank cover on the spray tank.

   Note: The tank cover is located at the top, center area of the tank. To open it, turn the front half of the cover counterclockwise and swing it open. You can remove the strainer inside for cleaning. To seal the tank, close the cover and rotate the front half clockwise.
6. Add 3/4 of the required water to the spray tank using the anti-siphon fill receptacle.

   Important: **Always use fresh clean water in the spray tank. Do not pour concentrate into an empty tank.**

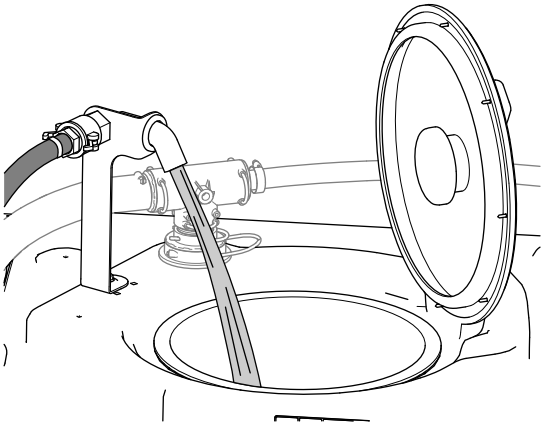

Figure 19

7. Start the engine and set the pump switch to the ON position.
8. Engage the throttle lock switch and rotate the engine speed dial to the max position.
9. Set the master section switch to the OFF position.
10. Turn the agitation valve to the ON position.
11. Add the proper amount of chemical concentrate to the tank as directed by the chemical manufacturer.

    Important: **If you are using a wettable powder without full agitation, mix the powder**

with a small amount of water to form a slurry before adding it to the tank.

12. Add the remaining water to the tank.

    Note: For better agitation, decrease the application rate setting.

    Important: **After filling the tank for the first time, check the tank straps for any play. Tighten as necessary.**

Inspecting the Tank Straps

Service Interval: Before each use or daily—Check the tank straps.

Important: **Overtightening the tank strap fasteners can result in deforming and damaging the tank and straps.**

Important: **Whenever possible, do not use reclaimed water (gray water) in the spray tank.**

1. Fill the main tank with water.
2. Check to see if there is any movement between the tank straps and the tank (Figure 20).

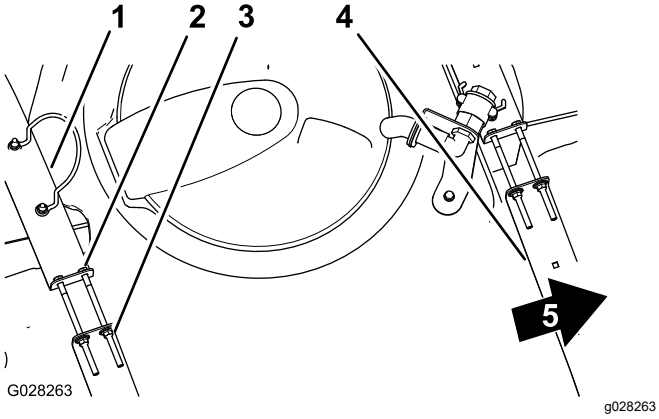

Figure 20

1. Rear tank strap
2. Bolt
3. Flanged locknut
4. Forward tank strap
5. Front of the machine

3. If the tank straps fit loose to the tank, tighten the flanged locknuts and bolts at the top of straps until the straps are flush with the surface of the tank (Figure 20).

   Note: Do not overtighten the tank strap hardware.

Calibrating the Sprayer Flow

Before using the sprayer for the first time, if you change the nozzles, or as needed, calibrate the sprayer flow.

Operator supplied equipment: A stopwatch capable of measuring ± 1/10 second and a container graduated in 50 ml (1 fl oz) increments.

Preparing the Machine

Important: **Whenever possible, do not use reclaimed water (gray water) in the spray tank.**

1. Fill the spray tank with clean water.

   Note: Ensure that there is enough water in the tank to complete the calibration.
2. Engage the parking brake and turn the engine on.
3. Set the pump switch to the ON position, and turn on the agitation.
4. Engage the throttle lock switch and rotate the engine speed dial to the max position.

Performing a Catch Test

1. Set all 3 section switches and the master-section switch to the ON position.
2. Turn the supervisor (rate-lockout) switch to the UNLOCK position.
3. Prepare to perform a catch test using the graduated container.
4. Set the pressure to 2.75 bar (40 psi) using the application rate switch and the throttle control knob.
5. Adjust the spray pressure so that the catch test yields the amounts listed in the table below.

   Note: Repeat the test 3 times and use the average.

Nozzle Color	Milliliters collected in 15 seconds	Ounces collected in 15 seconds
Yellow	189	6.4
Red	378	12.8
Brown	473	16.0
Gray	567	19.2
White	757	25.6
Blue	946	32.0
Green	1,419	48.0

6. Once the catch test has yielded the amounts listed in the table above, set the supervisor rate lockout switch to the LOCK position.
7. Turn off the master-section switch.

Performing the Sprayer Flow Calibration

1. On the InfoCenter, navigate to the Calibration menu and select FLOW CAL as follows:

   Note: Selecting the Home Screen icon at any time cancels calibrations.

   A. Press the center selection button on the InfoCenter twice to access the menus.

   B. Enter the calibration menu by pressing the right selection button on the InfoCenter.

   C. Select FLOW CAL by highlighting FLOW CAL and press the right selection button on the InfoCenter.

   D. In the next screen, enter the known quantity of water that will be sprayed out of the sections for the calibration procedure; refer to the chart below.

   E. Press the right selection button on the InfoCenter.

2. Using the plus (+) and minus (-) symbols, enter the flow volume according to the table below.

Nozzle Color	Liters	US Gallons
Yellow	42	11
Red	83	22
Brown	106	28
Gray	125	33
White	167	44
Blue	208	55
Green	314	83

3. Turn on the master-section switch for 5 minutes.

   Note: As the machine sprays, the InfoCenter displays the quantity of fluid that it is counting.

4. After spraying for 5 minutes, select the checkmark by pressing the center button on the InfoCenter.

   Note: It is acceptable if the gallons displayed during the calibration process do not match the known quantity of water entered into the InfoCenter.

5. Shut off the master-section switch.

   Note: Calibration is now complete.

Calibrating the Sprayer Speed

Before using the sprayer for the first time, if you change the nozzles, or as needed, calibrate the sprayer speed.

Important: **Whenever possible, do not use reclaimed water (gray water) in the spray tank.**

1. Fill the tank with clean water.
2. On an open, flat area, mark off a distance between 45 to 152 m (150 to 500 ft).

   Note: Toro recommends marking off 152 m (500 ft) for more accurate results.

3. Start the engine and drive to the start of the marked-off distance.

   Note: Align the center of the front tires with the starting line for the most accurate measurement.

4. On the InfoCenter, navigate to the Calibration menu and select SPEED CAL.

   Note: Selecting the Home Screen icon at any time cancels calibrations.

5. Select the Next arrow (→) on the InfoCenter.
6. Using the plus (+) and minus (-) symbols, enter the marked-off distance into the InfoCenter.
7. Shift the machine into first gear and drive the marked distance in a straight line at full throttle.
8. Stop the machine at the marked-off distance and select the check mark on the InfoCenter.

   Note: Slow down and roll to a stop to align the center of the front tires with the finish line, for the most accurate measurement.

   Note: Calibration is now complete.

Calibrating the Section-Bypass Valves

Before using the sprayer for the first time, if you change the nozzles, or as needed, calibrate the sprayer section bypass.

Important: **Select an open flat area to perform this procedure.**

Preparing the Machine

Important: **Whenever possible, do not use reclaimed water (gray water) in the spray tank.**

1. Fill the spray tank halfway with clean water.
2. Lower the sprayer sections.
3. Move the range selector to the NEUTRAL position and engage the parking brake.
4. Set the 3 section switches to the ON position, but leave the master-section switch off.

5. Set the pump switch to the ON position, and turn on the agitation.
6. Engage throttle lock switch; rotate engine speed dial to max position.
7. On the InfoCenter, navigate to the Calibration menu and select TEST SPEED.

   Note: Selecting the Home Screen icon at any time cancels the calibration.
8. Using the plus (+) and minus (-) symbols, enter a test speed of 5.6 km/h (3.5 mph), then select the Home icon.
9. Turn the supervisor (rate-lockout) switch to the UNLOCK position, and turn the master-section switch to the ON position.
10. Turn the master boom switch to the ON position.

Adjusting the Section Bypass Valves

1. Using the application-rate switch, adjust the application rate according to the table below or until the system pressure is at 2.75 bar (40 psi).

Nozzle Color	SI (Metric)	English	Turf
Yellow	159 L/ha	17 gpa	0.39 gpk
Red	319 L/ha	34 gpa	0.78 gpk
Brown	394 L/ha	42 gpa	0.96 gpk
Gray	478 L/ha	51 gpa	1.17 gpk
White	637 L/ha	68 gpa	1.56 gpk
Blue	796 L/ha	85 gpa	1.95 gpk
Green	1,190 L/ha	127 gpa	2.91 gpk

2. Turn off the left section and adjust the section-bypass knob until the pressure reading is at the previously adjusted level (typically 2.75 bar or 40 psi).

   Note: The numbered indicators on the bypass knob and needle are for reference only.

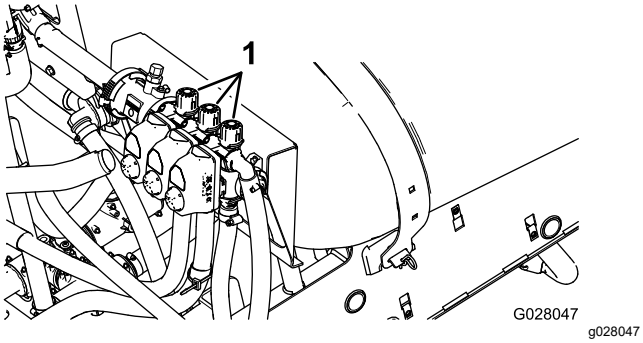

Figure 21

1. Section-bypass adjustment knobs

3. Turn on the left section and turn off the right section.
4. Adjust the right section-bypass knob until the pressure reading is at the previously adjusted level (typically 2.75 bar or 40 psi).
5. Turn on the right section and turn off the center section.
6. Adjust the center section-bypass knob until the pressure reading is at the previously adjusted level (typically 2.75 bar or 40 psi).
7. Turn each section off.
8. Turn the pump off.

   Note: Calibration is now complete.
9. Turn the master boom switch off.

Adjusting the Agitation and Master Bypass Valves

Agitation-Bypass Valve Knob Position

- A—fully open position
- B—closed (0) position
- C—intermediate (adjusted relative to the pressure gauge for the sprayer system) position

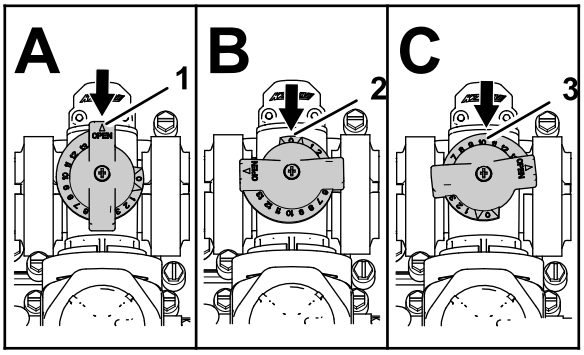

Figure 22

1. Open
2. Closed (0)
3. Intermediate position

Calibrating the Agitation-Bypass Valve

Service Interval: Yearly

Important: **Whenever possible, do not use reclaimed water (gray water) in the spray tank.**

Select an open flat area to perform this procedure.

1. Fill the spray tank with clean water.
2. Verify the agitation-control valve is open. If it has been adjusted, open it completely at this time.
3. Engage the parking brake and start the engine.
4. Set the range selector to NEUTRAL.

5. Set the pump switch to the ON position.
6. Engage throttle lock switch; rotate engine speed dial to max position.
7. Set the 3 section valves to the OFF position.
8. Set the master-section switch to the ON position.
9. Set the system pressure to 5.5 bar (80 psi).
10. Press the agitation switch to the OFF position and read the pressure gauge.
    - If the reading remains at 5.5 bar (80 psi) the agitation-bypass valve is properly calibrated.
    - If the pressure gauge reads differently, continue to the next step.
11. Adjust the agitation-bypass valve on the backside of the agitation valve until the pressure reading on the gauge is 5.5 bar (80 psi).

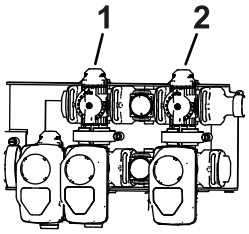

g509335

Figure 23

1. Agitation-bypass valve 2. Master-section bypass

12. Press the pump switch to the OFF position, shift the throttle lever to the IDLE position, and turn the ignition switch to the OFF position.

Adjusting the Master-Section-Bypass Valve

Important: **Whenever possible, do not use reclaimed water (gray water) in the spray tank.**

Note: Adjusting the master-section-bypass valve reduces or increases the amount of flow sent to the agitation nozzles in the tank when the master-section switch is set to the OFF position.

1. Fill the sprayer tank 1/2 full with clean water.
2. Move the machine to an open level surface.
3. Engage the parking brake.
4. Set the range selector to the NEUTRAL position.
5. Set the pump switch to the ON position.
6. Set the agitation switch to the ON position.
7. Set the master-section switch to the OFF position.
8. Engage throttle lock switch; rotate engine speed dial to max (rabbit) position.
9. Adjust the master-section-bypass handle to control the amount of agitation occurring in the tank.

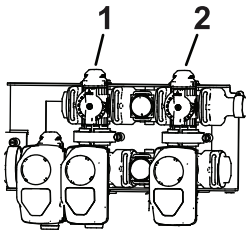

g509335

Figure 24

1. Agitation-bypass valve 2. Master-section bypass

10. Reduce the throttle speed to idle.
11. Set the agitation switch and pump switch to the OFF position.
12. Shut off the machine.

Locating the Spray Pump

The spray pump is located under the seat.

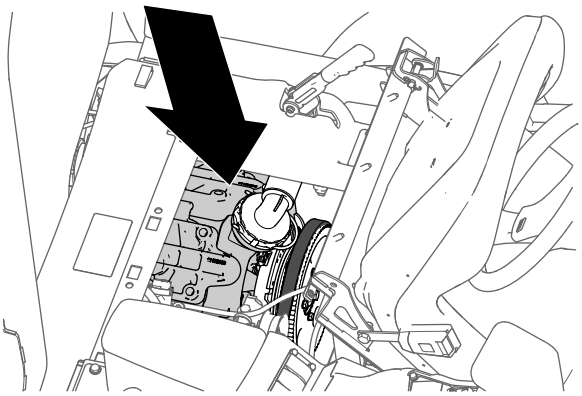

g216323

Figure 25

During Operation

During Operation Safety

General Safety

- The owner/operator can prevent and is responsible for accidents that may cause personal injury or property damage.
- Wear appropriate clothing, including eye protection; long pants; substantial, slip-resistant footwear; and hearing protection. Tie back long hair and do not wear loose clothing or loose jewelry.
- Wear appropriate personal protective equipment as directed in Chemical Safety.
- Use your full attention while operating the machine. Do not engage in any activity that causes distractions; otherwise, injury or property damage may occur.
- Do not operate the machine while ill, tired, or under the influence of alcohol or drugs.
- Do not carry passengers on the machine.
- Operate the machine only in good visibility. Avoid holes or hidden hazards.
- Before you start the engine, ensure that you are in the operating position, the transmission is in the NEUTRAL position (manual) or the PARK position (automatic), and the parking brake is engaged.
- Remain seated whenever the machine is in motion. Keep both hands on the steering wheel whenever possible, and always keep your arms and legs within the operator's compartment.
- Use care when approaching blind corners, shrubs, trees, or other objects that may obscure your vision.
- Before backing up, look rearward and ensure that no one is behind you. Back up slowly.
- Never spray while people, especially children, or pets are nearby.
- Do not operate the machine near drop-offs, ditches, or embankments. The machine could suddenly roll over if a wheel goes over the edge or if the edge gives way.
- Reduce the speed when operating on rough terrain, uneven ground, and near curbs, holes, and other sudden changes in terrain. Loads may shift, causing the machine to become unstable.
- Sudden changes in terrain may cause abrupt steering wheel movement, possibly resulting in hand and arm injuries. Grip the steering wheel loosely around the perimeter, and keep your hands clear of the steering wheel spokes.
- Stop the machine, shut off the engine, remove the key, engage the parking brake, and inspect for damage after striking an object or if there is an abnormal vibration in the machine. Make all necessary repairs before resuming operation.
- Slow down and use caution when making turns and crossing roads and sidewalks with the machine. Always yield the right-of-way.
- Use extra caution when operating the machine on wet surfaces, in adverse weather conditions, at higher speeds, or with a full load. Stopping time and distance increase in these conditions.
- Do not touch the engine or muffler while the engine is running or soon after it has shut off. These areas may be hot enough to cause burns.
- Before you leave the operator's position, do the following:
  - Park the machine on a level surface.
  - Shift the transmission into the NEUTRAL position (manual) or the PARK position (automatic).
  - Shut off the spray pump.
  - Engage the parking brake.
  - Shut off the engine and remove the key (if equipped).
  - Wait for all movement to stop.
- Never run an engine in an area where exhaust gasses are enclosed.
- Do not operate the machine when there is the risk of lightning.
- Use accessories and attachments approved by Toro only.

Rollover Protection System (ROPS) Safety

Note: For each machine covered in this *Operator's Manual*, a cab installed by Toro is a ROPS.

- Do not remove the ROPS from the machine.
- Fasten the seat belt and ensure that you can release it quickly in an emergency. Always wear your seat belt.
- Check carefully for overhead obstructions and do not contact them.
- Keep the ROPS in safe operating condition by thoroughly inspecting it periodically for damage and keeping all the mounting fasteners tight.
- Maintain and clean the seat belt(s) as necessary.
- Replace any damaged ROPS component. Do not repair or alter it.

Slope Safety

Slopes are a major factor related to loss of control and rollover accidents, which can result in severe injury or death. You are responsible for safe slope operation. Operating the machine on any slope requires extra caution.

- Review the slope instructions listed below for operating the machine on slopes and to determine whether you can operate the machine in the conditions on that day and at that job site. Changes in the terrain can result in a change in slope operation for the machine.
- Determine if the slope is safe for machine operation, including surveying the site. Always use common sense and good judgment when performing this survey.
- Avoid starting, stopping, or turning the machine on slopes. Travel up and down on slopes. Avoid making sudden changes in speed or direction. If you must turn the machine, turn it slowly and gradually downhill, if possible. Use care when reversing the machine.
- Do not operate a machine when you are uncertain about the traction, steering, or stability.
- Remove or mark obstructions such as ditches, holes, ruts, bumps, rocks, or other hidden hazards. Tall grass can hide obstructions. Uneven terrain could overturn the machine.
- Be aware that operating the machine on wet surfaces, across slopes, or downhill may cause the machine to lose traction. Loss of traction to the wheels may result in sliding and a loss of braking and steering.
- Use extreme caution when operating the machine near drop-offs, ditches, embankments, water hazards, or other hazards. The machine could suddenly roll over if a wheel goes over the edge or the edge caves in. Establish a safety area between the machine and any hazard.
- Use extra care while operating the machine with attachments; they can affect the stability of the machine.
- If the engine stalls or you begin to lose momentum while climbing a hill, gradually apply the brakes and slowly back straight down the hill.
- Always keep the transmission in gear (if applicable) when you drive the machine down a slope.
- Do not park the machine on an incline.
- The weight of the material in the tank can change the handling of the machine. To avoid loss of control and personal injury, follow these guidelines:
  - When operating with a heavy load, reduce your speed and allow for sufficient braking distance. Do not suddenly apply the brakes. Use extra caution on slopes.
  - Liquid loads shift, especially while turning, going up or down slopes, suddenly changing speeds, or while driving over rough surfaces. Shifting loads can cause the machine to tip over.

Radio Clip

Use the radio clip to store a hand-held radio while you are driving the machine (Figure 26).

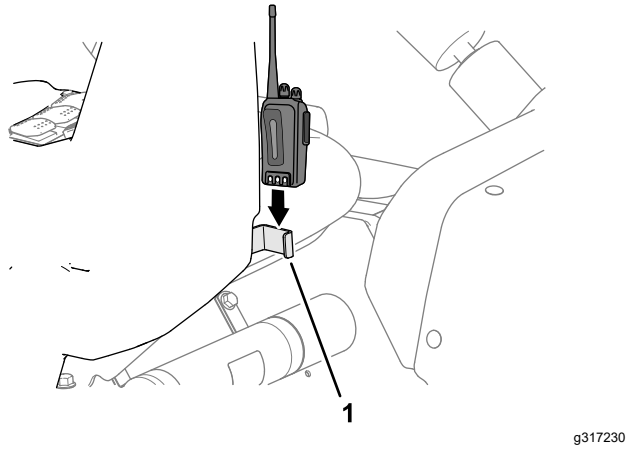

Figure 26

1. Radio clip

Operating the Machine

Starting the Engine

1. Sit in the operator's seat, insert the key into the ignition switch, and rotate the key clockwise to the RUN position.
2. Press the clutch and move the range selector to the NEUTRAL position.
3. Ensure that the pump switch is in the OFF position.
4. Turn the key to the START position until the engine starts.

   Important: **Do not hold the key in the START position for more than 10 seconds. If the engine has not started after 10 seconds, wait 1 minute before trying again. Do not attempt to push or tow the sprayer to start the engine.**

Driving the Machine

1. Release the parking brake.
2. Fully press the clutch pedal.
3. Move the gear shift lever to first gear.
4. Release the clutch pedal smoothly while pressing the accelerator pedal.

5. When the machine gains enough speed, remove your foot from the accelerator pedal, fully press the clutch pedal, move the gear shift lever to the next gear and release the clutch pedal while pressing the accelerator pedal. Repeat the procedure until the desired speed is attained.

   Important: **Always stop the machine before shifting from a forward gear to reverse or from reverse to a forward gear.**

   Note: Avoid long periods of engine idling.

   Use the chart below to determine the ground speed of an empty machine at 3,700 rpm.

Gear	Ratio	Speed (km/h)	Speed (mph)
1	66.4:1	6.1	3.8
2	38.1:1	10.7	6.6
3	19.6:1	20.9	13.0
R	80.7:1	5.1	3.2

   Note: Leaving the ignition switch in the ON position for long periods of time without running the engine will discharge the battery.

   Important: **Do not attempt to push or tow the machine to get it started. Damage to the drive train could result.**

Shutting Off the Engine

1. Press the clutch and apply the brake to stop the sprayer.
2. Pull the parking-brake lever up and back to set it.
3. Move the range selector out of gear into the NEUTRAL position.
4. Turn the ignition key to the STOP position.
5. Remove the key from the switch to prevent accidental starting.

Operating the Sprayer

To operate the Multi Pro Sprayer, first fill the spray tank, then apply the solution to the work area, and finally clean the tank. Complete all 3 of these steps in sequence to avoid damaging the sprayer. For example, do not mix and add chemicals in the spray tank at night and then spray in the morning. This would lead to separation of the chemicals and to possible damage to the spray system components.

⚠ CAUTION

Chemicals are hazardous and can cause personal injury.

- **Read the directions on the chemical labels before handling the chemicals, and follow all manufacturer recommendations and precautions.**
- **Keep chemicals away from your skin. Should contact occur, wash the affected area thoroughly with soap and clean water.**
- **Wear goggles and any other protective equipment recommended by the chemical manufacturer.**

The Multi Pro Sprayer has been specifically designed to have high durability to give it long sprayer life. Different materials have been chosen for specific reasons at different locations on your sprayer to meet this goal. Unfortunately, there is no single material which is perfect for all foreseeable applications.

Some chemicals are more aggressive than others, and each chemical interacts differently with various materials. Some consistencies (e.g., wettable powders, charcoal) are more abrasive and lead to higher-than-normal wear rates. If a chemical is available in a formulation that would provide increased life to the sprayer, use this alternative formulation.

As always, remember to clean your sprayer thoroughly after all applications. This will do the most to ensure that your sprayer has a long and trouble-free life.

Spraying

Important: **To ensure that your solution remains well mixed, use the agitation feature whenever you have a solution in the tank. For agitation to work, you must have the pump on and the engine running above an idle. If you stop the machine and need agitation, engage the parking brake, turn the pump on, and enable the throttle lock funciton.**

1. Lower the sections into position.
2. Set the spray-pump switch to the ON position.
3. Set the master-section switch in the OFF position, set the 3 section switches to the ON position.
4. Drive to the location where you will be spraying.
5. Set the master-section switch to the ON position to begin spraying.

   Note: The InfoCenter shows the sections with the spray on.

   Note: When the tank is nearly empty, the agitation may cause foaming in the tank. To prevent this, turn the agitation valve off.

Alternatively, you can use an anti-foaming agent in the tank.

6. Use the rate switch to adjust and set a target.
7. When finished spraying, set the master-section switch to the OFF position to turn off all sections, then set the pump switch to the OFF position.

Positioning the Spray Sections

The boom-section lift switches on the sprayer control panel allows you to move the outer spray sections between transport position and spray position without leaving the operator's seat. Whenever possible, stop the machine before changing spray section positions.

Lowering the Outer-Spray Sections to the Spray Position

1. Park the machine on a level surface.
2. Use the boom-section lift switches to lower the outer sections.

   Note: Wait until the outer spray sections reach the full, extended spray position.

Raising the Outer-Spray Sections to the Transport Position

1. Park the machine on a level surface.
2. Use the boom-section lift switches to raise the outer spray sections, until they have moved completely into boom-section transport cradles forming the “X” transport position, and the lift cylinders are fully retracted.

   Important: **Release the boom-section lift switch(es) once the outer spray sections have reached the desired position. Running the actuators against the mechanical stops may damage the lift cylinders and/or other hydraulic components.**

   Important: **Ensure that the spray sections do not contact any low overhead objects while in the transport position, this can damage the spray sections.**

   Important: **The spray sections can be damaged by transporting them in any position other than the “X” transport position using the boom transport cradle.**

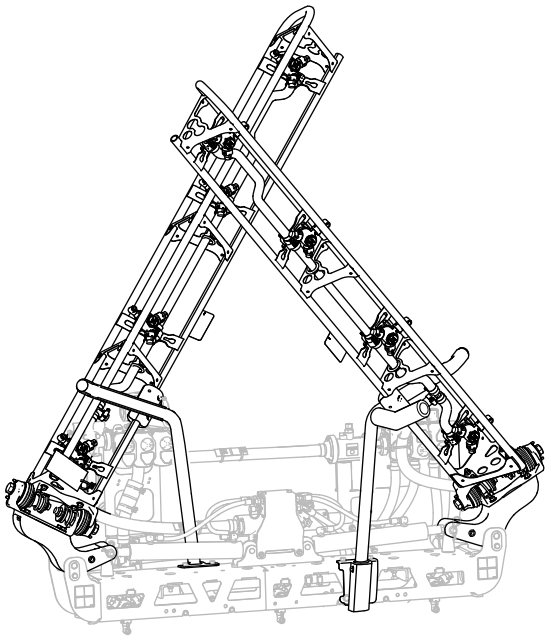

Figure 27
“X” transport position

Important: **To prevent damage to the lift cylinder, make sure that the actuators are fully retracted before transporting the machine.**

Spraying Tips

- Do not overlap areas that you have previously sprayed.
- Watch for plugged nozzles. Replace all worn or damaged nozzles.
- Use the master section switch to stop the spray flow before stopping the sprayer. Once it stops, use the engine-throttle control to hold the engine speed up to keep the agitation running.
- You will obtain better results if the sprayer is moving when you turn the spray sections on.

Unclogging a Nozzle

If a nozzle becomes clogged while you are spraying, clean the nozzle as follows:

1. Stop the sprayer on a level surface, shut off the engine, and engage the parking brake.
2. Set the master section switch to the OFF position and then set the sprayer-pump switch to the OFF position.
3. Remove the clogged nozzle and clean it using a spray bottle of water and a toothbrush.
4. Install the nozzle.

After Operation

After Operation Safety

General Safety

- Before you leave the operator's position, do the following:
  - Park the machine on a level surface.
  - Shift the transmission into the NEUTRAL position (manual) or the PARK position (automatic).
  - Shut off the spray pump.
  - Engage the parking brake.
  - Shut off the engine and remove the key (if equipped).
  - Wait for all movement to stop.
  - Allow the machine to cool before adjusting, servicing, cleaning, or storing it.
- After you finish operating the machine for the day, wash off all chemical residue from the outside of the machine and ensure that the system has been neutralized and triple rinsed according to the recommendations of the chemical manufacturer(s) and that all the valves have been cycled 3 times; refer to Chemical Safety.
- Allow the engine to cool before storing the machine in any enclosure.
- Never store the machine or fuel container where there is an open flame, spark, or pilot light, such as on a water heater or other appliance.
- Keep all parts of the machine in good working condition and all hardware tightened.
- Replace all worn, damaged, or missing decals.

Cleaning the Sprayer

Important: **Do not use brackish or reclaimed water to clean the machine.**

Cleaning the Sprayer System

Draining the Tank

1. Stop the sprayer, engage the parking brake, shut off the engine, and remove the key.
2. Locate the tank-drain valve at the left side of the machine, forward of the fuel tank (Figure 28).

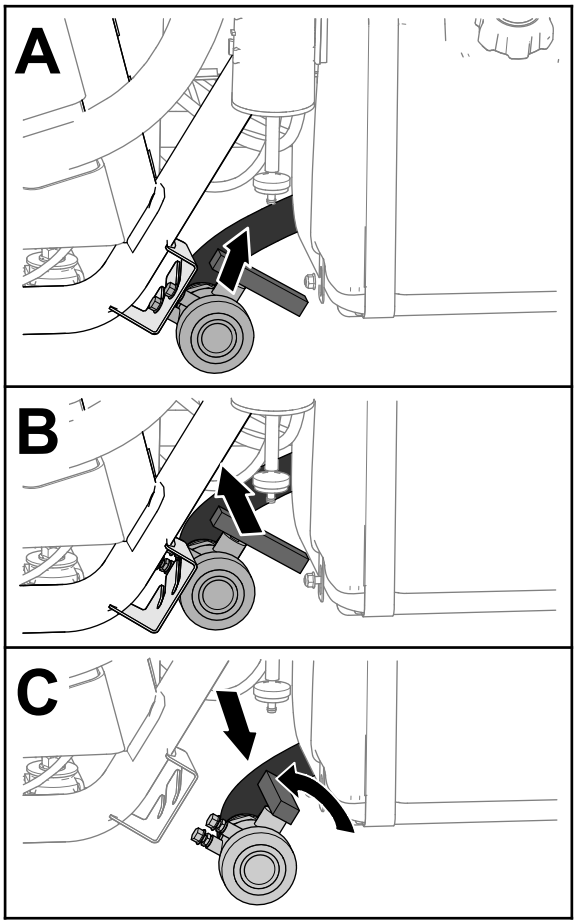

g237187

Figure 28

3. Lift the valve and move it inboard until the mount studs of the valve clear the slots in the drain-valve bracket, and move the valve rearward (Figure 28).

4. Align the end of the valve with the drain container and rotate valve handle counterclockwise to the open position (Figure 28).
5. When the tank has drained completely, rotate the drain-valve handle to the closed position and assemble the valve onto the drain-valve bracket (Figure 28).

   Important: **Dispose of the sprayer tank chemicals according to local codes and the material manufacturer's instructions.**

Cleaning Internal Sprayer Components

Important: **Use only clean water when cleaning the sprayer.**

Important: **You must always drain and flush out the sprayer, including any installed spray system accessories immediately after each use. Failure to flush and clean the sprayer may allow the chemicals to dry and obstruct in the lines, filters, valves, nozzle bodies, pump, and other components.**

Use the approved Clean Rinse Kit for this machine. Contact your authorized Toro distributor for more information.

Note: The recommendations and instructions that follow assume that the Toro Rinse Kit is not installed.

Clean the spray system and any installed spray accessories after **each** spraying session. To fully clean the spray system, you must rinse it 3 times.

1. Fill the tank with at least 190 L (50 US gallons) of clean water and close the cover.
2. For the first and second times that you rinse the system, you can use a cleaning/neutralizing agent in the water as needed.

   Note: On the final rinse, use only clean, clear water.
3. Lower the outer spray sections into the spray position.
4. Start the engine, set the spray pump switch to the ON position, and move the accelerator pedal to a higher engine speed.
5. Set the agitation switch to the ON position.
6. Use the application-rate switch to increase the pressure to a high setting.
7. Set the individual section switches and master section switch to the ON positions.
8. Check the nozzles to ensure that they are all spraying correctly.
9. Allow all the water in the tank to spray out through the nozzles.
10. Set the master section switch to the OFF position, the set the agitation switch and spray-pump switch to the OFF position, and shut off the engine.
11. Repeat steps 1 through 10 at least 2 more times to ensure that the spray system is fully cleaned.

    Important: **You must always complete 3 rinse cycles to ensure that the spray system and spray accessories are fully clean, preventing damage to the system.**

Cleaning External Sprayer Components

1. Clean the suction and pressure filters; refer to Cleaning the Suction Filter (page 36) and Cleaning the Pressure Filter (page 37).

   Important: **If you used wettable powder chemicals, clean the strainer after each tank.**
2. Using a garden hose, rinse off the outside of the sprayer with clean water.
3. Remove the nozzles and clean them by hand.

   Note: Replace damaged or worn nozzles.

   Note: If your machine has optional nozzle filters, clean them before installing the nozzles; refer to Cleaning the Optional Nozzle Filters (page 38).

Cleaning the Suction Filter

Service Interval: After each use—Clean the suction filter. Clean the suction filter (more often when using wettable powders).

1. Park the machine on a level surface, engage the parking brake, shut off the pump, shut off the engine, and remove the key.
2. At the top of the sprayer tank, remove the retainer that secures the hose fitting attached to the large hose from the filter housing (Figure 29).

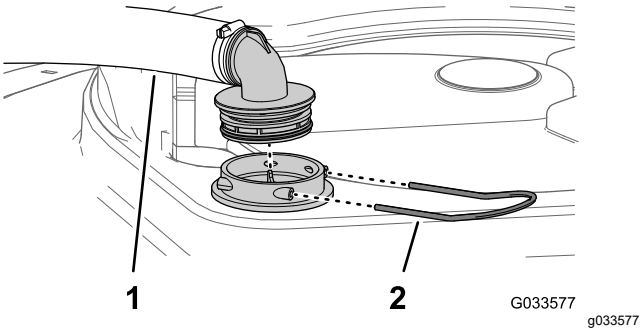

Figure 29

1. Suction hose
2. Retainer

3. Remove the hose and hose fitting from the filter housing (Figure 29).

4. Pull the suction strainer out of the filter housing in the tank (Figure 30).

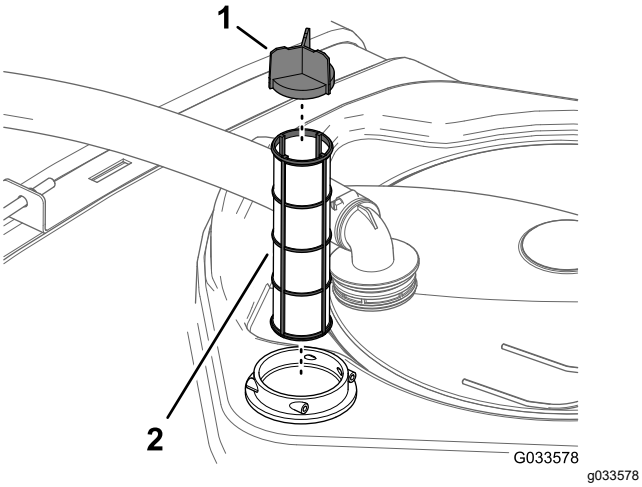

Figure 30

1. Screen vane
2. Suction strainer

5. Clean the suction filter with clean water.

   Important: **Replace the filter if it is damaged or cannot be cleaned.**

6. Insert the suction filter into the filter housing until the filter is fully seated.
7. Align the hose and hose fitting to the filter housing at the top of the tank, and secure fitting and housing with the retainer that you removed in step 2.

Cleaning the Pressure Filter

Service Interval: After each use—Clean the pressure filter. Clean the pressure filter (more often when using wettable powders).

1. Park the machine on a level surface, engage the parking brake, shut off the sprayer pump, shut off the engine, and remove the key.
2. Align a drain pan under the pressure filter (Figure 31).

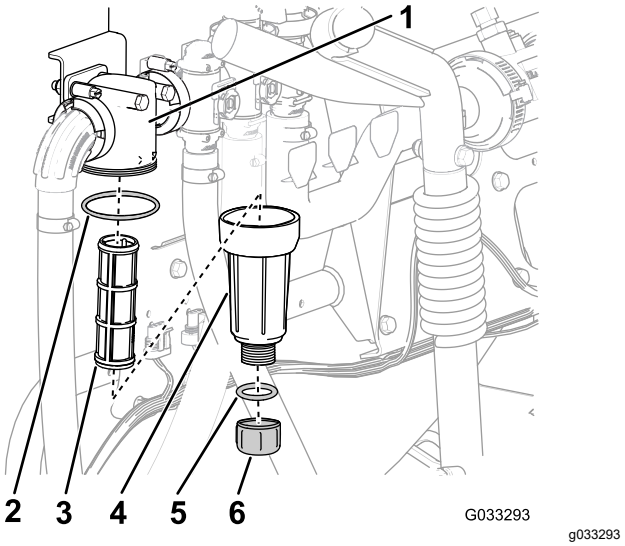

Figure 31

1. Filter head
2. Gasket (bowl)
3. Filter element
4. Gasket (drain plug)
5. Drain cap
6. Bowl

3. Rotate the drain cap counterclockwise and remove it from the bowl of the pressure filter (Figure 31).

   Note: Allow the bowl to drain completely.

4. Rotate the bowl counterclockwise and remove the filter head (Figure 31).
5. Remove the pressure filter element (Figure 31).
6. Clean the pressure filter element with clean water.

   Important: **Replace the filter if it is damaged or cannot be cleaned.**

7. Check the gasket for the drain plug (located inside the bowl) and the gasket for bowl (located inside the filter head) for damage and wear (Figure 31).

   Important: **Replace any damaged or worn gaskets for the plug, bowl, or both.**

8. Install the pressure filter element into the filter head (Figure 31).

   Note: Ensure that the filter element is firmly seated into the filter head.

9. Install the bowl onto the filter head, and tighten by hand (Figure 31).
10. Assemble the drain cap onto the fitting at the bottom of the bowl, and tighten the cap by hand (Figure 31).

Cleaning the Optional Nozzle Filters

1. Park the machine on a level surface, engage the parking brake, shut off the sprayer pump, shut off the engine, and remove the key.
2. Remove the nozzle from the spray turret (Figure 32).

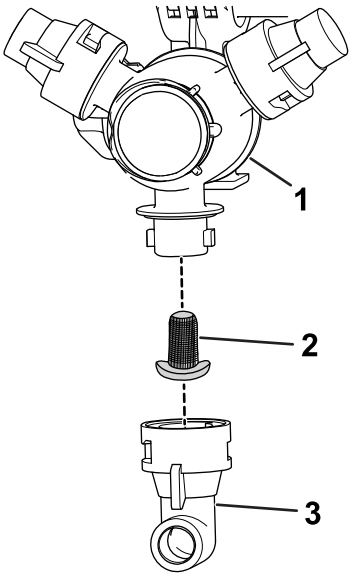

g209504

Figure 32

1. Spray turret
2. Nozzle filter
3. Nozzle

3. Remove the nozzle filter (Figure 32).
4. Clean the nozzle filter with clean water.

   Important: **Replace the filter if it is damaged or cannot be cleaned.**

5. Install the nozzle filter (Figure 32).

   Note: Ensure that the filter is fully seated.

6. Install the nozzle onto the spray turret (Figure 32).
7. Repeat steps 2 through 6 for the other spray nozzles.

Cleaning the Nozzle Body and Check-Valve Diaphragm

Service Interval: Yearly—Clean the nozzle body and check-valve diaphragm. Clean the nozzle body and check-valve diaphragm if you notice that a nozzle(s) is dripping after the section switch(es) is shut off.

1. Rotate the diaphragm cap counterclockwise and remove the cap from the nozzle body (Figure 33).

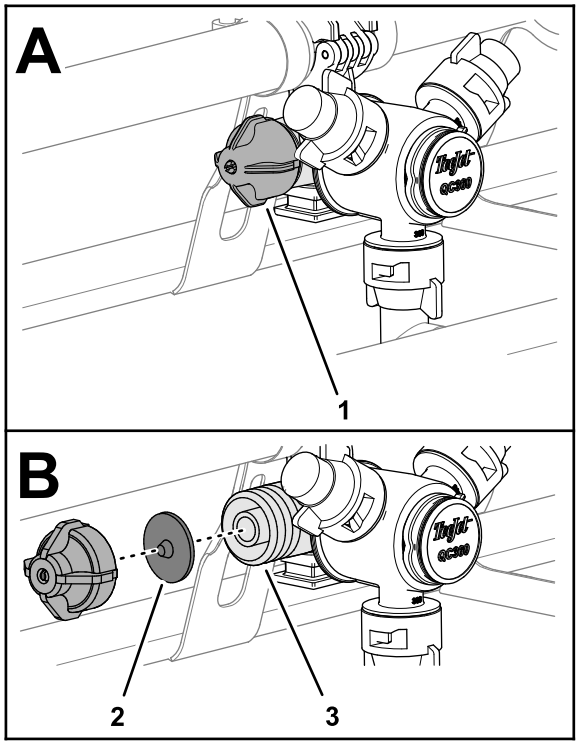

g239582

Figure 33

1. Diaphragm cap
2. Check-valve diaphragm
3. Nozzle body

2. Remove the check-valve diaphragm from the cap or nozzle body (Figure 33).
3. Clean the cap, diaphragm, and nozzle body with clean water (Figure 33).
4. Assemble the diaphragm into the cap with the nib of the diaphragm toward the cap (Figure 33).

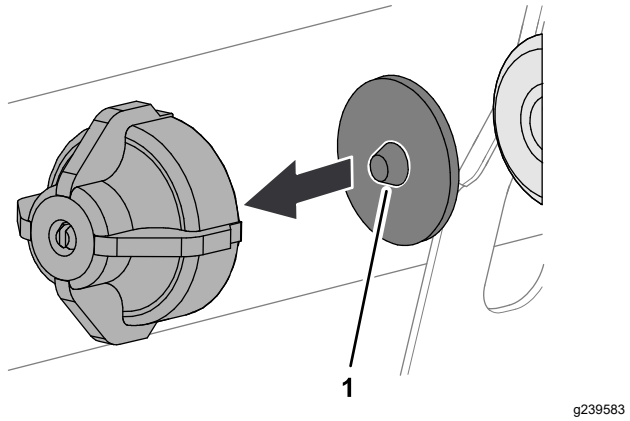

Figure 34

1. Nib (diaphragm)

5. Assemble the cap and diaphragm to the nozzle body and tighten by hand (Figure 33).
6. Repeat steps 1 through 5 for the other spray nozzles.

Conditioning the Spray System

Service Interval: After each use—Condition the spray system at the end of each daily use.

Conditioner Specification

Conditioner specification: propylene glycol "non-toxic RV antifreeze" with corrosion inhibitor

Important: **Use only propylene glycol with corrosion inhibitor.**

Do not use recycled propylene glycol. Do not use ethylene glycol base antifreeze.

Do not use propylene glycol with soluble alcohols (methanol, ethanol, or isopropanol) or brines added.

Preparing the Conditioner

1. Move the machine to a level surface, engage the parking brake, shut off the engine, and remove the key.
2. Add conditioner to the tank as follows:
   - For ready to use (premixed) propylene glycol RV antifreeze—add 10 gallons of propylene glycol RV antifreeze to the tank.
   - For concentrated propylene glycol RV antifreeze, perform the following steps:
     A. Add a 10 gallon mixture of propylene glycol RV antifreeze and water into the sprayer tank. Prepared the antifreeze mixture as instructed manufacturer for a concentration rated for -45°C (-50°F) minimum.

     Important: **Use only clean water when cleaning the sprayer.**

     B. Start the engine and set the spray-pump switch to the ON position.
     C. Press the accelerator pedal to increase the engine speed.
     D. Set the agitation switch to the ON position.

     Allow the conditioner and water solution to circulate for 3 minutes or longer.

Spraying the Conditioner

Recommended tool: a clear catch container.

1. Move the machine to the drain pad area and engage the parking brake.
2. Lower the outer booms sections.
3. Set the left, center, and right section switches and the master section switch to the ON position.
4. Allow the spray system to spray until the nozzles discharge the conditioner.

   Note: Most propylene glycol RV antifreeze is colored pink. Use the catch container to sample the sprayer discharge at several of the nozzles.
5. Shut off the master section switch, 3 section switches, agitation switch, spray-pump switch, and engine.

Transporting the Sprayer

Use a trailer or truck when moving the machine long distances.

- Use full-width ramps for loading the machine onto a trailer or truck.
- Tie outer spray sections to the boom-section transport cradles.
- Bind the machine securely to the transport vehicle; Figure 35 illustrates the tie-down loops of the machine.

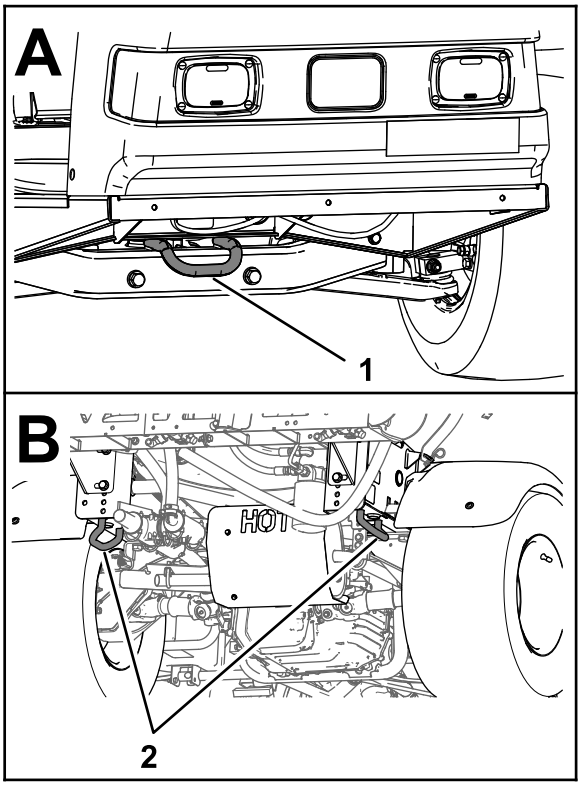

g216272

Figure 35

1. Front tie-down loop
2. Rear tie-down loops

Towing the Sprayer

In case of an emergency, you can tow the sprayer for a short distance. However, do not use this as a standard procedure.

⚠ WARNING

Towing at excessive speeds could cause a loss of steering control, resulting in personal injury.

Never tow the sprayer faster than 8 km/h (5 mph).

Towing the sprayer is a 2-person job. If you must move the machine a considerable distance, transport it on a truck or trailer; refer to Transporting the Sprayer (page 39).

1. Attach a tow line to the frame.
2. Put the range selector in the NEUTRAL position and release the parking brake.
3. Tow the sprayer at less than 8 km/h (5 mph).

Maintenance

Note: Download a free copy of the schematic by visiting www.Toro.com and searching for your machine from the Manuals link on the home page.

For additional information about the sprayer system, refer to the sprayer system schematic in Schematics (page 67).

Note: Determine the left and right sides of the machine from the normal operating position.

Maintenance Safety

- Before you leave the operator's position, do the following:
  - Park the machine on a level surface.
  - Shift the transmission into the NEUTRAL position (manual) or the PARK position (automatic).
  - Engage the parking brake.
  - Shut off the engine and remove the key (if equipped).
  - Wait for all movement to stop.
- Allow machine components to cool before performing maintenance.
- Allow only qualified and authorized personnel to maintain, repair, adjust, or inspect the machine.
- Before performing any maintenance, thoroughly clean and rinse the sprayer; refer to Chemical Safety.
- Chemicals used in the sprayer system may be hazardous and toxic to you, bystanders, animals, plants, soils, or other property.
  - Carefully read and follow the chemical warning labels and safety data sheets (SDSs) for all chemicals used, and protect yourself according to the chemical manufacturer's recommendations.
  - Always protect your skin while you are near chemicals. Use the appropriate personal protective equipment (PPE) to guard against contact with chemicals, including the following:
    - ◊ safety glasses, goggles, and/or face shield
    - ◊ a chemical suit
    - ◊ a respirator or filter mask
    - ◊ chemical-resistant gloves
    - ◊ rubber boots or other substantial footwear
    - ◊ a clean change of clothes, soap, and disposable towels for cleanup
  - Refuse to operate or work on the sprayer if chemical safety information is not available.
  - Do not fill, calibrate, or clean the machine while people, especially children, or pets are in the area.
  - Handle chemicals in a well-ventilated area.
  - Have clean water available, especially when filling the spray tank.
  - Do not eat, drink, or smoke while working near chemicals.
  - Do not clean spray nozzles by blowing through them or placing them in your mouth.
  - Always wash your hands and other exposed areas as soon as possible after working with chemicals.
  - Chemicals and fumes are dangerous; never enter the tank or place your head over or in the opening of a tank.
- To ensure that the entire machine is in good condition, keep all hardware properly tightened.
- To reduce the potential for fire, keep the engine area free of excessive grease, chemicals, grass, leaves, and dirt.
- If you must run the engine to perform a maintenance adjustment, keep your hands, feet, clothing, and any parts of your body away from the engine and any moving parts. Keep everyone away.
- Do not adjust the ground speed of the machine. To ensure safety and accuracy, have an authorized Toro distributor check the ground speed.
- If the machine requires a major repair or you need technical help, contact an authorized Toro distributor.
- Modifying this machine in any manner may affect machine operation, performance, durability, or its use, and result in injury or death. Such use could void the product warranty.
- Support the machine with jack stands whenever you work under the machine.
- Carefully release pressure from components with stored energy.

Recommended Maintenance Schedule(s)

Maintenance Service Interval	Maintenance Procedure
After the first 8 hours	• Torque the wheel-lug nuts. • Replace the hydraulic filter.
After the first 50 hours	• Change the engine oil. • Check the air filter for the carbon canister. • Replace the carbon-canister filter.
Before each use or daily	• Check the air pressure in the tires every 8 hours or daily. • Check the tank straps. • Check the engine-rotating screen. • Check the engine oil. • Check the tire pressure.
After each use	• Clean the sprayer. • Clean the suction filter. • Clean the pressure filter. • Condition the spray system at the end of each daily use.
Every 25 hours	• Remove the air-cleaner cover and clean out the debris.
Every 50 hours	• Lubricate the pump. • Check the battery-cable connections. • Check the battery-electrolyte level.
Every 100 hours	• Lubricate all grease fittings. • Lubricate the section hinges. • Clean the engine-rotating screen (more often in dusty, dirty conditions). • Change the air-cleaner filter (more frequently in dusty or dirty conditions). • Change the engine oil (more often when operating under heavy load or in high temperature). • Torque the wheel-lug nuts. • Inspect the condition and wear of the tires. • Check front wheel toe-in. • Inspect the brakes.
Every 200 hours	• Replace the engine-oil filter. • Replace the fuel filter. • Check the air filter for the carbon canister. • Replace the carbon-canister filter. • Check the adjustment of the differential-lock cable. • Check the parking brake. • Check the transaxle/hydraulic fluid. • Inspect all hoses and connections for damage and proper attachment. • Clean the flow meter (more often when using wettable powders).
Every 400 hours	• Inspect the fuel lines. • Drain and clean the fuel tank. • Change the suction filter. • Change the pressure filter. • Inspect the pump diaphragms and replace if necessary (see an authorized Toro distributor). • Inspect the pump check valves and replace if necessary (see an authorized Toro distributor). • Inspect the nylon pivot bushings.
Every 500 hours	• Change the spark plugs.
Every 800 hours	• Change the transaxle/hydraulic fluid and clean strainer. • Replace the hydraulic filter.
Yearly	• Calibrate the agitation-bypass valve. • Clean the nozzle body and check-valve diaphragm.

Important: **Refer to the engine owner's manual for additional maintenance procedures.**

Daily Maintenance Checklist

Duplicate this page for routine use.

Maintenance Check Item	**For the week of:**						
	Mon.	**Tues.**	**Wed.**	**Thurs.**	**Fri.**	**Sat.**	**Sun.**
Check the brake and parking brake operation.							
Check the gear shift/neutral operation.							
Check the fuel level.							
Check the engine-oil level.							
Check the transaxle oil level.							
Inspect the air filter.							
Inspect the engine cooling fins.							
Check any unusual engine noises.							
Check any unusual operating noises.							
Check the tire pressure.							
Check for fluid leaks.							
Check the instrument operation.							
Check the accelerator operation.							
Clean the suction strainer.							
Check toe-in.							
Lubricate all grease fittings.[1]							
Touch up and damaged paint.							

[1]Immediately after **every** washing, regardless of the interval listed

Notation for Areas of Concern

Inspection performed by:		
Item	**Date**	**Information**
1		
2		
3		
4		
5		
6		
7		
8		
9		
10		
11		
12		

⚠ CAUTION

If you leave the key in the ignition switch, someone could accidently start the engine and seriously injure you or other bystanders.

Remove the key from the ignition and disconnect the wire(s) from the spark plug(s) before you perform any maintenance. Set the wire(s) aside so that it does not accidentally contact the spark plug(s).

Pre-Maintenance Procedures

Raising the Sprayer

Whenever the engine is run for routine maintenance and/or engine diagnostics, the rear wheels of the sprayer should be 2.5 cm (1 inch) off the ground with the rear axle supported on jack stands.

⚠ DANGER

A sprayer on a jack may be unstable and slip off the jack, injuring anyone beneath it.

- **Do not start the engine while the sprayer is on a jack.**
- **Always remove the key from the ignition before getting off the sprayer.**
- **Block the tires when the sprayer is on a jack.**

The jacking point at the front of the sprayer is under the front crossbar (Figure 36A). The jacking point at the rear of the sprayer is on the rear frame support, behind the rear tie-down loops (Figure 36B).

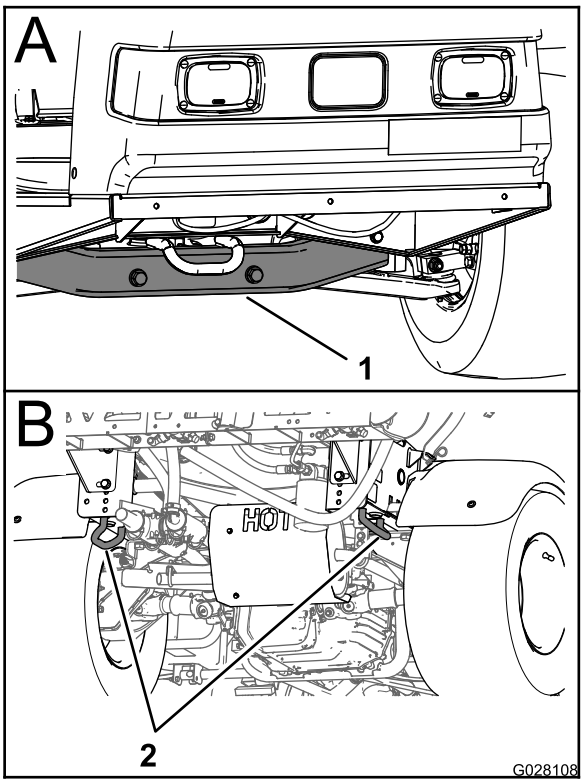

g028108

Figure 36

1. Front jacking point
2. Rear tie-down loops

Lubrication

Greasing the Machine

Service Interval: Every 100 hours/Yearly (whichever comes first)—Lubricate all grease fittings.

Grease Type: No. 2 lithium grease

Refer Figure 37 for the grease-point locations.

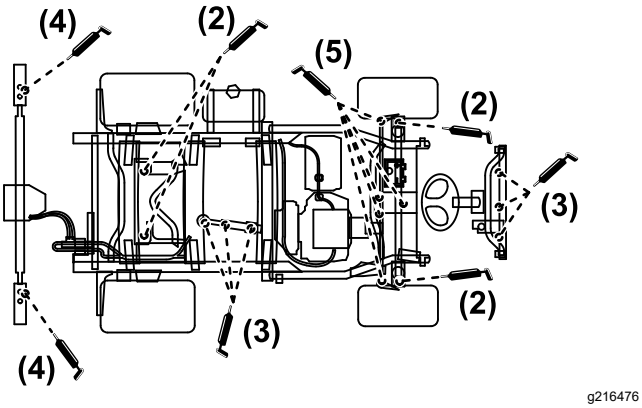

Figure 37

1. Wipe the grease fitting clean so that you do not force dirt or debris into the bearing or bushing.
2. Pump grease into the bearing or bushing.
3. Wipe off the excess grease.

Greasing the Sprayer Pump

Service Interval: Every 50 hours—Lubricate the pump.

Grease Type: Mobil XHP 461

1. Raise the sprayer; refer to Raising the Sprayer (page 44).
2. Locate the sprayer pump.

   Note: The pump is located below the seat; refer to Locating the Spray Pump (page 30).
3. Wipe the 2 remote grease fittings clean (Figure 38A and Figure 38B).

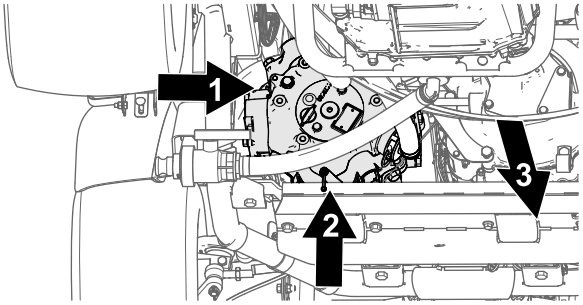

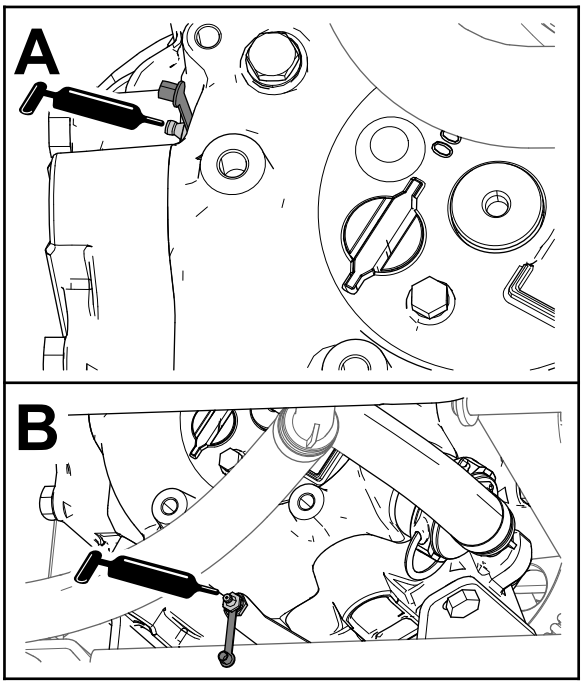

Figure 38

1. Grease fitting (outboard side of the spray pump)
2. Grease fitting (bottom, rear side of the spray pump)
3. Front of the machine

4. Pump grease into each remote grease fitting (Figure 38A and Figure 38B).
5. Wipe off the excess grease.

Greasing the Section Hinges

Service Interval: Every 100 hours

Important: **If the section hinge is washed with water, clear all water and debris from the hinge assembly and apply fresh grease.**

Grease Type: No. 2 lithium grease

1. Wipe the grease fittings clean so that foreign matter cannot be forced into the bearing or bushing.
2. Pump grease into the bearing or bushing at each fitting (Figure 39).

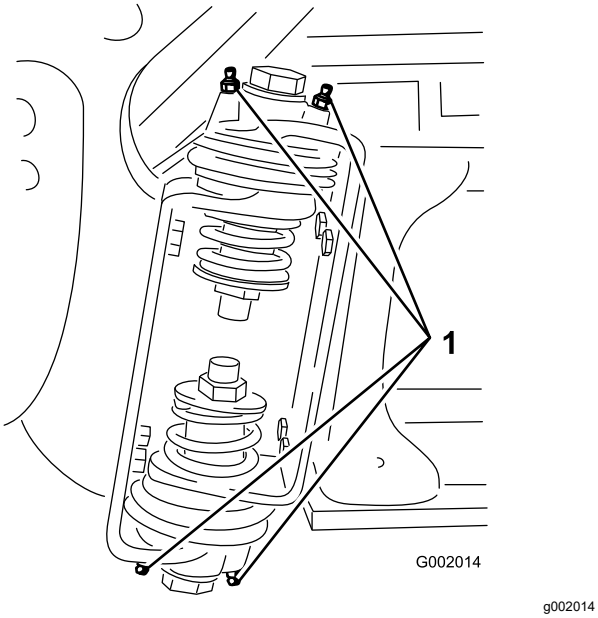

Figure 39

1. Grease fitting

3. Wipe off excess grease.
4. Repeat the procedure for each section pivot.

Engine Maintenance

Engine Safety

Shut off the engine before checking the oil or adding oil to the crankcase.

Checking the Air-Intake Screen

Service Interval: Before each use or daily—Check the engine-rotating screen.

Every 100 hours—Clean the engine-rotating screen (more often in dusty, dirty conditions).

Check and clean as necessary the air-intake screen on the front of the engine before each use or daily.

Servicing the Air Cleaner

Service Interval: Every 25 hours—Remove the air-cleaner cover and clean out the debris.

Every 100 hours—Change the air-cleaner filter (more frequently in dusty or dirty conditions).

Inspect the air cleaner and hoses periodically to maintain maximum engine protection and to ensure maximum service life. Check the air-cleaner body for damage that could possibly cause an air leak. Replace a damaged air-cleaner body.

1. Release the latches on the air cleaner and pull the air-cleaner cover off the air-cleaner body (Figure 40).

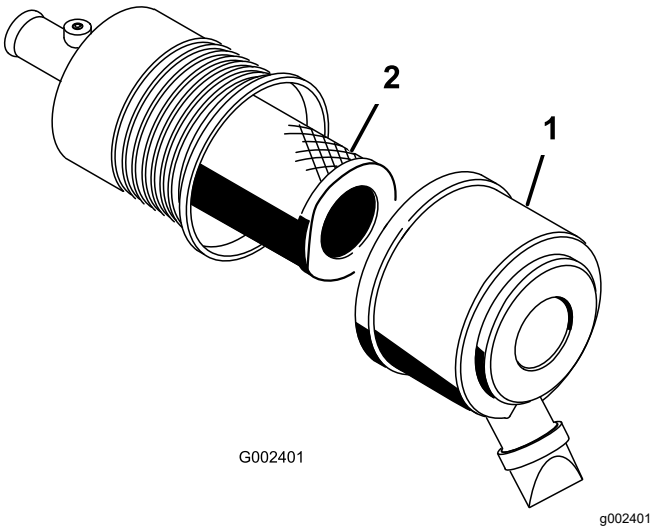

Figure 40

1. Air-cleaner cover
2. Filter

2. Squeeze the dust cap sides to open it and knock the dust out.

3. Gently slide the filter out of the air-cleaner body (Figure 40).

   Note: Avoid knocking the filter into the side of the body.

   Note: Do not attempt to clean the filter.

4. Inspect the new filter for damage by looking into the filter while shining a bright light on the outside of the filter.

   Note: Holes in the filter appear as bright spots. Inspect the element for tears, an oily film, or damage to the rubber seal. If the filter is damaged, do not use it.

   Note: To prevent engine damage, always operate the engine with the air filter and cover installed.

5. Carefully slide the filter over the body tube (Figure 40).

   Note: Ensure that it is fully seated by pushing on the outer rim of the filter while installing it.

6. Install the air-cleaner cover with the side facing up, and secure the latches (Figure 40).

Servicing the Engine Oil

Crankcase Capacity is 2.0 L (2.1 US qt) with the filter.

Use high-quality engine oil that meets the following specifications:

- API classification Level required: SJ or higher.
- Preferred oil: SAE 10W30 (above 0°F)
- Alternate oil: SAE 5W30 (below 32°F)

Toro Premium Engine Oil is available from your distributor in either 10W30 or 5W30 viscosity. See the *Parts Catalog* for part numbers.

Checking the Engine Oil

Service Interval: Before each use or daily

The engine is shipped with oil in the crankcase; however, you must check the level of oil before you first start the engine and after you have run it.

1. Position the machine on a level surface.
2. Remove the dipstick and wipe it with a clean rag. Insert the dipstick into the tube and make sure that it is seated fully. Remove the dipstick and check the oil level.
3. If the oil level is low, remove the filler cap from the valve cover and pour oil into the opening until the oil level is up to the FULL mark on the dipstick. Add the oil slowly and check the level often during this process. Do not overfill.
4. Install the dipstick firmly in place.

Changing the Engine Oil

Service Interval: After the first 50 hours—Change the engine oil.

Every 100 hours—Change the engine oil (more often when operating under heavy load or in high temperature).

1. Start the engine and let it run for 5 minutes. Running the engine warms the oil, so it drains better.
2. Position the machine on a level surface, engage the parking brake, shut off the sprayer pump, shut off the engine, and remove the key.
3. Release the latch on the back of the seat and lift the seat forward.

⚠ CAUTION

Components under the seat are hot if the sprayer has been running. If you touch hot components, you may be burned.

Allow the sprayer to cool before performing maintenance or touching components under the hood.

4. Place a pan below the oil drain.
5. Remove the drain plug (Figure 41).

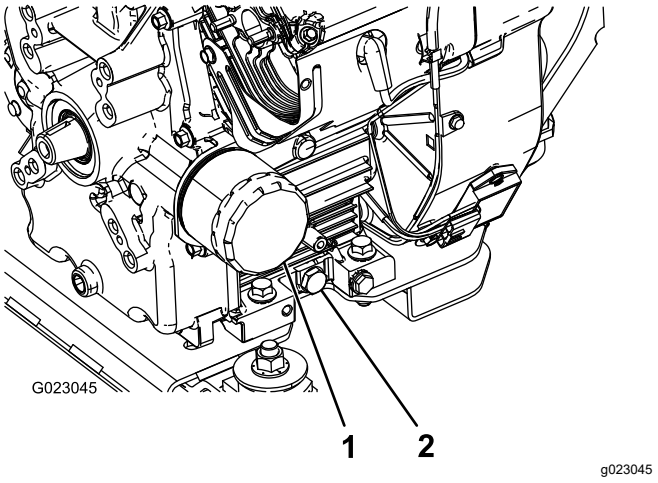

Figure 41

1. Oil filter
2. Oil-drain plug

6. When the oil has drained completely, replace the drain plug and torque it to 13.6 N·m (10 ft-lb).
7. Dispose of the used oil at a certified recycling center.
8. Slowly pour approximately 80% of the specified amount of oil into the oil filler tube (Figure 41).
9. Check the oil level.
10. Slowly add additional oil to bring the oil level to the FULL mark on the dipstick.

Important: **Overfilling the crankcase with oil may cause engine damage.**

Changing the Engine-Oil Filter

Service Interval: Every 200 hours

1. Drain the oil from the engine.
2. Remove the oil filter.
3. Wipe the filter adapter gasket surface.
4. Apply a thin coat of new oil to the rubber gasket on the replacement filter.
5. Install the replacement oil filter to the filter adapter. Turn the oil filter clockwise until the rubber gasket contacts the filter adapter, then tighten the filter an additional 1/2 turn.
6. Fill the crankcase with the correct type of new oil.
7. Dispose of the used oil filter at a certified recycling center.

Changing the Spark Plugs

Service Interval: Every 500 hours

Type: Champion RC-12YC (or equivalent)

Air Gap: 0.76 mm (0.030 inch)

Make sure that the air gap between the center and side electrodes is correct before installing the spark plugs. Use a spark-plug wrench for removing and installing the spark plugs and a gapping tool/feeler gauge to check and adjust the air gap.

Removing the Spark Plugs

1. Position the machine on a level surface, engage the parking brake, shut off the sprayer pump, shut off the engine, and remove the key.
2. Release the latch on the back of the seat and lift the seat forward.
3. Pull the wires off the spark plugs.
4. Clean around the spark plugs to prevent dirt from falling into the engine and potentially causing damage.
5. Remove the spark plugs and metal washers.

Checking the Spark Plugs

1. Look at the center of the spark plugs (Figure 42).

   Note: If you see a light brown or gray coating on the insulator, the engine is operating properly. A black coating on the insulator usually means that the air cleaner is dirty.

   Important: **Do not clean the spark plugs. Always replace a spark plug when it has a black coating, worn electrodes, an oily film, or cracks.**

2. Check the gap between the center and side electrodes (Figure 42) and bend the side electrode if the gap is not correct.

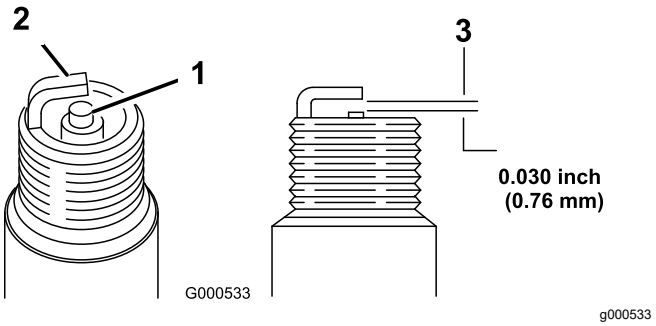

Figure 42

1. Center-electrode insulator
2. Side electrode
3. Air gap (not to scale)

Installing the Spark Plugs

1. Install the spark plugs and metal washers.
2. Tighten the spark plugs to 24.4 to 29.8 N·m (18 to 22 ft-lb).
3. Push the wires onto the spark plugs (Figure 42).
4. Close and latch the seat.

Fuel System Maintenance

Replacing the Fuel Filter

Service Interval: Every 200 hours—Replace the fuel filter.

Every 400 hours/Yearly (whichever comes first)—Inspect the fuel lines.

1. Engage the parking brake, stop the pump, shut off the engine, and remove the ignition key.
2. Release the latch on the back of the seat and lift the seat forward.
3. Clamp off the hose on either side of the fuel filter to prevent gas from pouring out of the hoses when you remove the filter.
4. Place a drain pan under the filter.
5. Squeeze the ends of the hose clamps together and slide them away from the filter (Figure 43).
6. Remove the filter from the fuel lines.

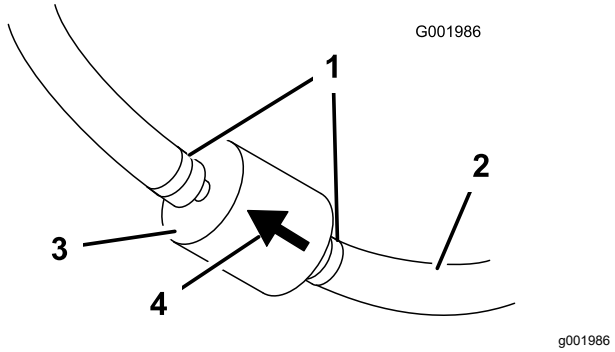

Figure 43

1. Hose clamp
2. Fuel line
3. Filter
4. Flow-direction arrow

7. Install a new filter and move the hose clamps close to the filter.

   Ensure that the flow-direction arrow points toward the engine.

Servicing the Carbon Canister

Checking the Air Filter for the Carbon Canister

Service Interval: After the first 50 hours

Every 200 hours

Check the opening at the bottom of the air filter for the carbon canister to ensure that it is clean and free of debris and obstructions (Figure 44).

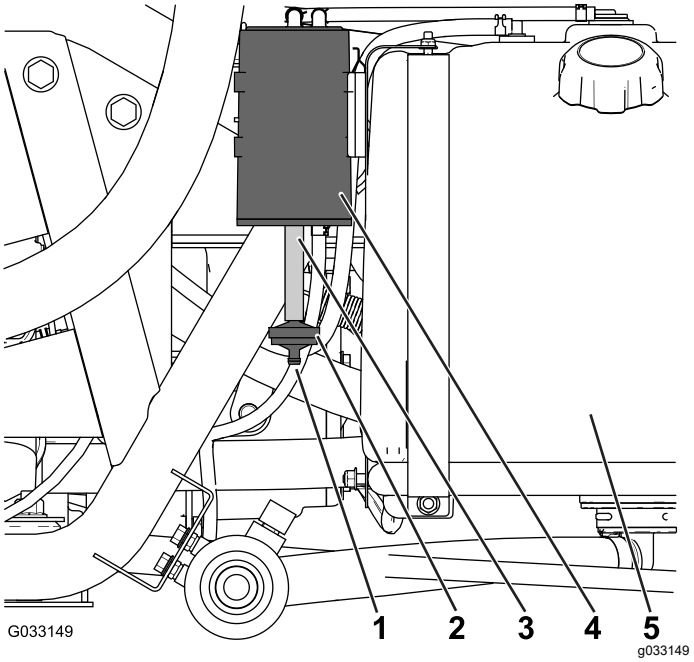

Figure 44

1. Air-filter opening
2. Carbon-canister filter
3. Hose
4. Carbon canister
5. Fuel tank

Replacing the Carbon-Canister Filter

Service Interval: After the first 50 hours

Every 200 hours

1. Remove the barbed fitting of the carbon-canister filter from the hose at the bottom of the carbon canister, and remove the filter (Figure 44).

   Note: Discard the old filter.

2. Fully insert the barbed fitting of the new carbon-canister filter into the hose at the bottom of the carbon canister.

Draining the Fuel Tank

Service Interval: Every 400 hours/Yearly (whichever comes first)

Drain and clean the fuel tank if the fuel system becomes contaminated or if you plan to store the machine for an extended period. Use fresh, clean fuel to flush out the tank.

1. Transfer the fuel from the tank into an approved fuel container using a siphon pump, or remove the tank from the machine and pour the fuel out of the tank fill spout into the fuel container.

   Note: If you remove the fuel tank, also remove the fuel and return hoses from the tank before removing the tank.

2. Replace the fuel filter; refer to Replacing the Fuel Filter (page 49).
3. Flush the tank with fresh, clean fuel, if necessary.
4. Install the tank if you removed it.
5. Fill the tank with fresh, clean fuel.

Electrical System Maintenance

Electrical System Safety

- Disconnect the battery before repairing the machine. Disconnect the negative terminal first and the positive last. Connect the positive terminal first and the negative last.
- Charge the battery in an open, well-ventilated area, away from sparks and flames. Unplug the charger before connecting or disconnecting the battery.
- Wear protective clothing and use insulated tools.

Locating the Fuses

There are 2 fuse blocks and 1 empty slot in the electrical system. They are located beneath the seat (Figure 45).

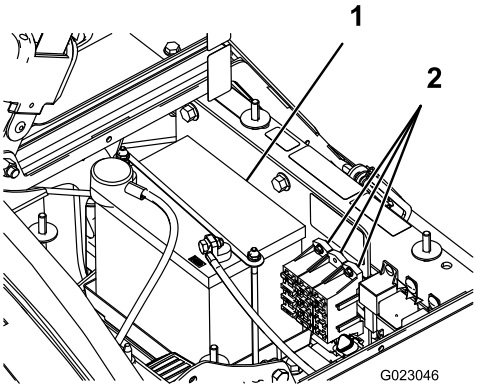

g023046

Figure 45

1. Battery
2. Fuse blocks

Servicing the Battery

Important: **Do not jump start the battery of the machine.**

Always keep the battery clean and fully charged. Use a paper towel to clean the battery and battery box. If the battery terminals are corroded, clean them with a solution of 4 parts water and 1 part baking soda. Apply a light coating of grease to the battery terminals to prevent corrosion.

Voltage: 12 V with 280 cold cranking A at 0°F

Removing the Battery

1. Position the sprayer on a level surface, engage the parking brake, shut off the sprayer pump, shut off the engine, and remove the key.

2. The battery is located on the right side of the machine behind the pump (Figure 45).
3. Disconnect the negative (black) ground cable from the battery post.

⚠ WARNING

Incorrect battery cable routing could damage the sprayer and cables causing sparks. Sparks can cause the battery gasses to explode, resulting in personal injury.

- **Always disconnect the negative (black) battery cable before disconnecting the positive (red) cable.**
- **Always connect the positive (red) battery cable before connecting the negative (black) cable.**

⚠ WARNING

Battery terminals or metal tools could short against metal sprayer components causing sparks. Sparks can cause the battery gasses to explode, resulting in personal injury.

- **When removing or installing the battery, do not allow the battery terminals to touch any metal parts of the sprayer.**
- **Do not allow metal tools to short between the battery terminals and metal parts of the sprayer.**
- **Always keep the battery strap in place to protect and secure the battery.**

4. Disconnect the positive (red) cable from the battery post.
5. Remove the battery retainer and fasteners (Figure 45).
6. Remove the battery.

Installing the Battery

Service Interval: Every 50 hours—Check the battery-cable connections.

1. Set the battery on the battery box so that the battery posts are toward the front of the sprayer.
2. Install the battery retainer and secure it with the fasteners you removed previously (Figure 45).

   Important: **Always keep the battery retainer in place to protect and secure the battery.**
3. Connect the positive (red) cable to the positive (+) battery post and the negative (black) cable to the negative (-) battery post using the bolts and wing nuts. Slide the rubber boot over the positive battery post.
4. Install the battery cover and secure it with the 2 knobs (Figure 45).

Checking the Electrolyte Level

Service Interval: Every 50 hours

Note: When the machine is in storage check the battery-electrolyte level every 30 days.

1. Loosen the knobs on the sides of the battery box and remove the battery cover (Figure 45).
2. Remove the filler caps. If the electrolyte is not up to the fill line, add the required amount of distilled water; refer to Adding Water to the Battery (page 51).

⚠ DANGER

Battery electrolyte contains sulfuric acid which is a deadly poison and causes severe burns.

- **Do not drink electrolyte or allow it to contact your skin, eyes, or clothing. Wear safety glasses to shield your eyes and rubber gloves to protect your hands.**
- **Fill the battery where clean water is always available for flushing the skin.**

Adding Water to the Battery

The best time to add distilled water to the battery is just before you operate the machine. This lets the water mix thoroughly with the electrolyte solution.

1. Clean the top of the battery with a paper towel.
2. Remove the filler caps from the battery and slowly fill each cell with distilled water until the level is up to the fill line. Replace the filler caps.

   Important: **Do not overfill the battery. Electrolyte will overflow onto other parts of the sprayer and severe corrosion and deterioration will result.**

Charging the Battery

⚠ WARNING

Charging the battery produces gasses that can explode.

Never smoke near the battery and keep sparks and flames away from battery.

Important: **Always keep the battery fully charged (1.260 specific gravity). This is especially important to prevent battery damage when the temperature is below 0°C (32°F).**

1. Remove the battery from the chassis; refer to Removing the Battery (page 50).
2. Check the electrolyte level; refer to Checking the Electrolyte Level (page 51).
3. Connect a 3 to 4 A battery charger to the battery posts. Charge the battery at a rate of 3 to 4 A for 4 to 8 hours (12 V).

   Important: **Do not overcharge the battery.**
4. Install the battery in the chassis; refer to Installing the Battery (page 51).

Storing the Battery

If the machine will be stored for more than 30 days, remove the battery and charge it fully. Either store it on the shelf or on the machine. Leave the cables disconnected if it is stored on the machine. Store the battery in a cool atmosphere to avoid quick deterioration of the charge in the battery. To prevent the battery from freezing, ensure that it is fully charged.

Drive System Maintenance

Inspecting the Wheels and Tires

Service Interval: Before each use or daily—Check the tire pressure.

After the first 8 hours—Torque the wheel-lug nuts.

Every 100 hours—Torque the wheel-lug nuts.

Every 100 hours—Inspect the condition and wear of the tires.

Check the tire pressure every 8 hours or daily to ensure proper levels. Fill the tires to 138 kPa (20 psi). Also, check the tires for wear or damage.

Check the wheels to ensure that they are mounted securely after the first 8 operating hours and then every 100 hours thereafter. Torque the front and rear lug nuts to 102 to 108 N·m (75 to 80 ft-lb).

Check the tire condition at least every 100 hours of operation. Operating accidents such as hitting a curb can damage a tire or rim, and cause steering misalignment. Inspect the tire condition after an accident.

Adjusting the Differential-Lock Cable

Service Interval: Every 200 hours

1. Move the differential-lock lever to the OFF position.
2. Loosen the jam nuts securing the differential-lock cable to the bracket on the transaxle (Figure 46).

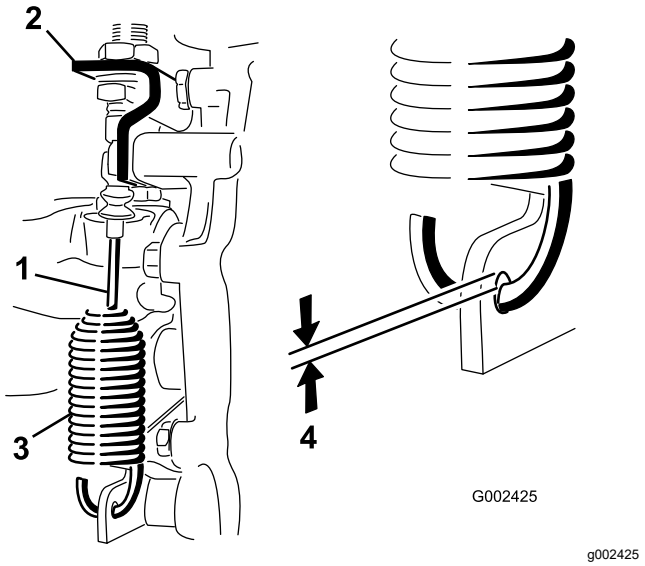

Figure 46

1. Differential-lock cable
2. Transaxle bracket
3. Spring
4. 0.25 to 1.5 mm (0.01 to 0.06 inch) gap

3. Adjust the jam nuts to obtain a 0.25 to 1.5 mm (0.01 to 0.06 inch) gap between the spring hook and the outside diameter of the hole in the transaxle lever.
4. Tighten the jam nuts when finished.

Adjusting the Front Wheel Toe-in

Service Interval: Every 100 hours/Yearly (whichever comes first)

The toe-in should be 0 to 6 mm (0 to 1/4 inch).

1. Fill the tank with approximately 331 L (87.5 US gallons) of water.
2. Check and fill all tires; refer to Inspecting the Wheels and Tires (page 52).
3. Drive the sprayer back and forth a few times to relax the A-arms, then drive it forward at least 3 m (10 ft).
4. Measure the distance between both the front tires at the axle height at both the front and rear of the front tires (Figure 47).

   Note: You will need a fixture or alignment gauge for measuring the rear of the front tires at axle height. Use the same fixture or alignment gauge to accurately measure the front of the front tires at axle height (Figure 47).

   The front of the tires should be 0 to 6 mm (0 to 1/4 inch) closer than the back side of the front tires.

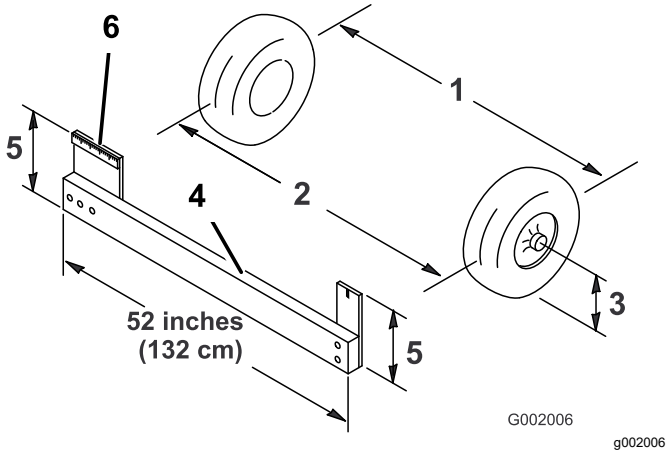

Figure 47

1. Tire centerline—back
2. Tire centerline—front
3. Axle centerline
4. Fixture
5. Axle-centerline distance
6. 15 cm (6 inches) ruler

5. If the measurement does not fall within the specified range, loosen the jam nuts at both ends of the tie rods (Figure 48).

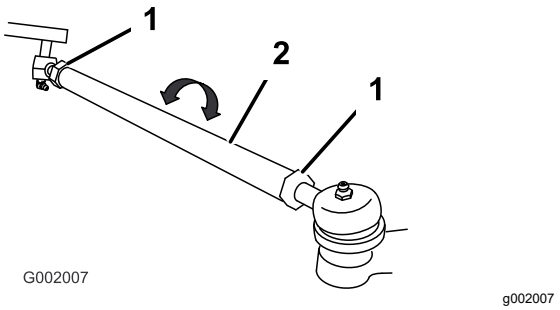

Figure 48

1. Jam nut
2. Tie rod

6. Rotate both tie rods to move the front of the tire inward or outward.

   Note: The tie rods measure the same length.
7. Tighten the tie rod jam nuts when the adjustment is correct.
8. Ensure that there is full travel of the steering wheel in both directions.

Brake Maintenance

Checking the Brake Fluid

The brake-fluid reservoir is shipped from the factory filled with DOT 3 brake fluid. Check the level before starting the engine each day.

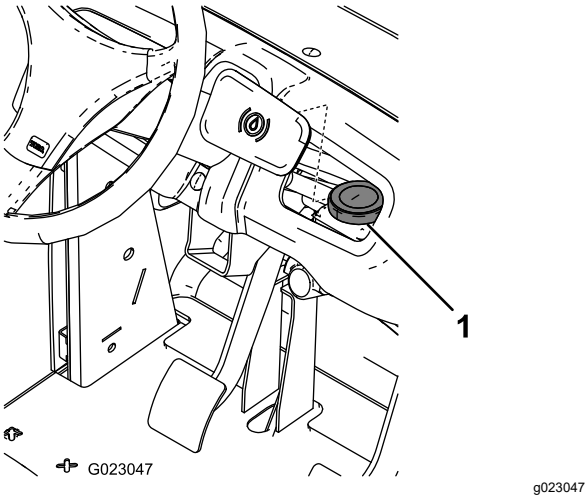

Figure 49

1. Brake-fluid reservoir

1. Position the sprayer on a level surface, engage the parking brake, stop the pump, shut off the engine, and remove the ignition key.
2. The fluid level should be up to the FULL line on the reservoir.
3. If the fluid level is low, clean the area around the reservoir cap, remove the cap, and fill the reservoir to the proper level. Do not overfill.

Inspecting the Brakes

Service Interval: Every 100 hours

The brakes are a critical safety component of the sprayer. Inspect them as follows:

- Inspect the brake shoes for wear or damage. If the lining (brake pad) thickness is less than 1.6 mm (1/16 inch), replace the brake shoes.
- Inspect the backing plate and other components for signs of excessive wear or deformation. If any deformation is found, replace the appropriate components.

Adjusting the Parking Brake

Service Interval: Every 200 hours—Check the parking brake.

1. Remove the plastic grip.
2. Loosen the set screw securing the knob to the parking-brake lever (Figure 50).

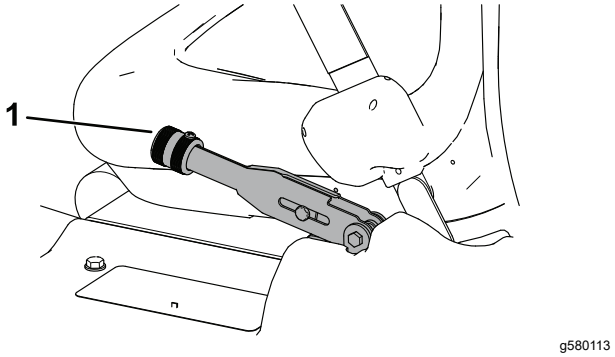

Figure 50

1. Parking-brake lever

3. Rotate the knob until a force of 18 to 23 kg (40 to 50 lb) is required to actuate the lever.
4. Tighten the set screw.

Hydraulic System Maintenance

Hydraulic System Safety

- Seek immediate medical attention if fluid is injected into skin. Injected fluid must be surgically removed within a few hours by a doctor.
- Safely relieve all pressure in the hydraulic system before performing any work on it.
- Ensure that all hydraulic-fluid hoses and lines are in good condition and all hydraulic connections and fittings are tight before applying pressure to the hydraulic system.
- Keep your body and hands away from pinhole leaks or nozzles that eject high-pressure hydraulic fluid.
- Use cardboard or paper to find hydraulic leaks.

Hydraulic Fluid Specification

Fluid type: Dexron III ATF.

Reservoir capacity: approximately 7 L (7.5 US qt)

Checking the Transaxle/Hydraulic Fluid

Service Interval: Every 200 hours

1. Position the sprayer on a level surface, engage the parking brake, shut off the sprayer pump, shut off the engine, and remove the key.
2. Remove the transaxle dipstick and wipe it with a clean rag (Figure 51).

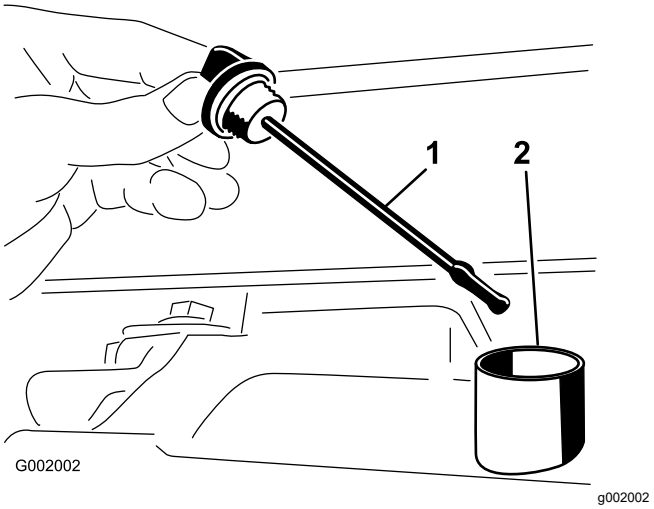

Figure 51

1. Dipstick
2. Fill hole

Important: **Do not get dirt or other contaminants into the opening when checking the transmission oil.**

3. Insert the dipstick into the tube and make sure that it is seated fully. Remove the dipstick and check the oil level.
4. The transaxle fluid level should be at the top of the flat portion of the dipstick. If it is not, fill the reservoir with the specified hydraulic fluid; refer to Hydraulic Fluid Specification (page 55).
5. Install the dipstick firmly in place.

Changing Transaxle/Hydraulic Fluid

Service Interval: Every 800 hours/Yearly (whichever comes first)

1. Position the sprayer on a level surface, engage the parking brake, stop the pump, shut off the engine, and remove the ignition key.
2. Place a drain pan under the drain plug of the reservoir.
3. Remove the drain plug from the side of the reservoir, and let the hydraulic fluid flow into the drain pan (Figure 52).

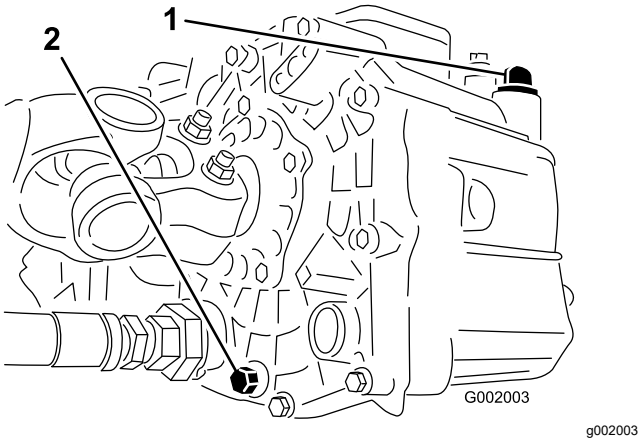

Figure 52

1. Hydraulic dipstick
2. Drain plug

4. Note the orientation of the hydraulic hose and 90° fitting connected to the strainer.
5. Remove the hydraulic hose and 90° fitting (Figure 53).

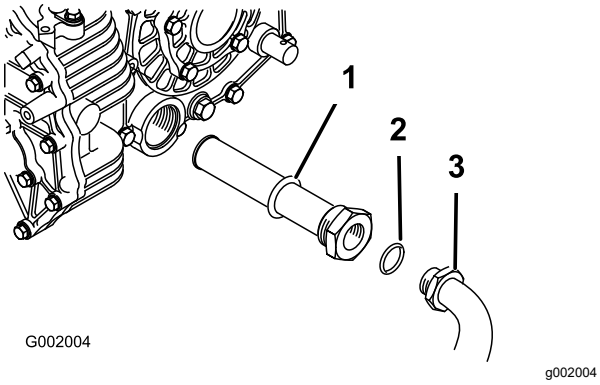

Figure 53

1. Hydraulic strainer
2. O-ring
3. 90° fitting

6. Remove the strainer and clean it by back flushing it with a clean degreaser.
7. Allow the strainer to air dry.
8. Install the strainer when the oil is draining.
9. Install the hydraulic hose and 90° fitting to the strainer.
10. Install and tighten the drain plug.
11. Fill the reservoir with approximately 7 L (7.5 US qt) of Dexron III ATF.

    Important: **Use only the hydraulic fluids specified. Other fluids could cause system damage.**
12. Start the engine and drive the sprayer to fill the hydraulic system.
13. Check the oil level and replenish it, if required.

Replacing the Hydraulic Filter

Service Interval: After the first 8 hours

Every 800 hours/Yearly (whichever comes first)

Use the Toro replacement filter (Part No. 54-0110).

Important: **Use of any other filter may void the warranty on some components.**

1. Position the sprayer on a level surface, engage the parking brake, stop the pump, shut off the engine, and remove the ignition key.
2. Clean the area around the filter mounting area.
3. Place a drain pan under the filter.
4. Remove the filter (Figure 54).

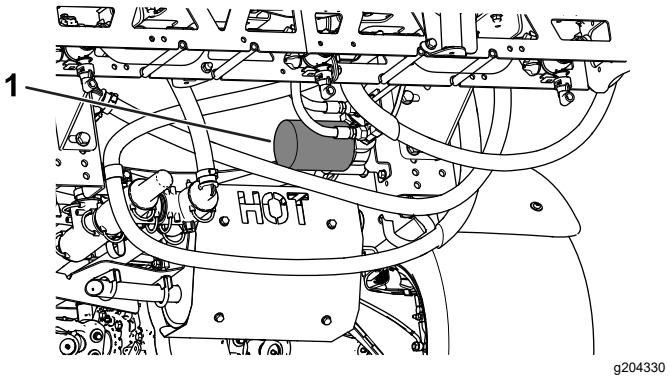

Figure 54

1. Hydraulic filter

5. Lubricate the new filter gasket.
6. Ensure that the filter mounting area is clean.
7. Screw the filter on until the gasket contacts the mounting plate, then tighten the filter 1/2 turn.
8. Start the engine and let it run for about 2 minutes to purge air from the system.
9. Shut off the engine and check the hydraulic-fluid level and for leaks; refer to Checking the Transaxle/Hydraulic Fluid (page 55).

Checking the Hydraulic Lines and Hoses

Inspect the hydraulic lines and hoses daily for leaks, kinked lines, loose mounting supports, wear, loose fittings, weather deterioration, and chemical deterioration. Make all necessary repairs before operating.

Spray System Maintenance

Inspecting the Hoses

Service Interval: Every 200 hours—Inspect all hoses and connections for damage and proper attachment.

Examine each hose in the spray system for cracks, leaks, or other damage. At the same time, inspect the connections and fittings for similar damage. Replace any worn or damaged hoses and fittings.

Changing the Suction Filter

Service Interval: Every 400 hours

Note: Determine the appropriate suction filter mesh size that you need for your job; refer to Selecting a Suction Filter (page 23).

1. Park the machine on a level surface, engage the parking brake, shut off the pump, shut off the engine, and remove the key.
2. At the top of the sprayer tank, remove the retainer that secures the hose fitting attached to the large hose from the filter housing (Figure 55).

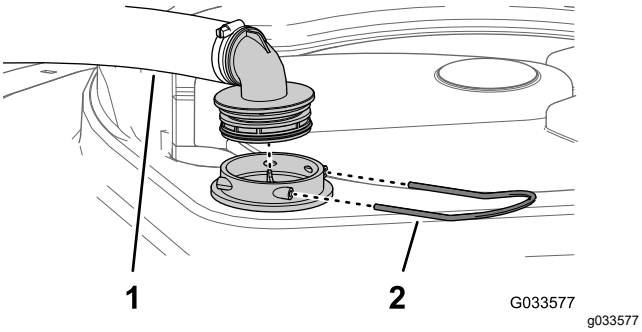

Figure 55

1. Suction hose
2. Retainer

3. Remove the hose and hose fitting from the filter housing (Figure 55).
4. Remove the old suction filter from the filter housing in the tank (Figure 56).

   Note: Discard the old filter.

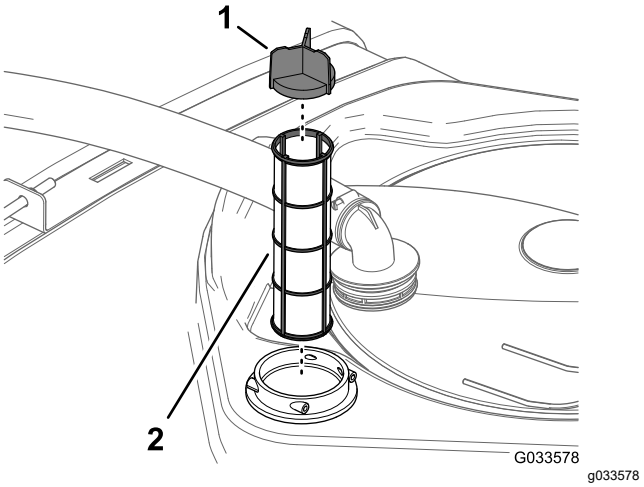

Figure 56

1. Screen vane
2. Suction filter

5. Install the new suction filter into the filter housing.

   Note: Ensure that the filter is fully seated.
6. Align the hose and hose fitting to the filter housing at the top of the tank, and secure the fitting and housing with the retainer that you removed in step 2.

Changing the Pressure Filter

Service Interval: Every 400 hours

1. Move the machine to a level surface, shut off the sprayer pump, shut off the engine, and remove the key.
2. Align a drain pan under the pressure filter (Figure 57).

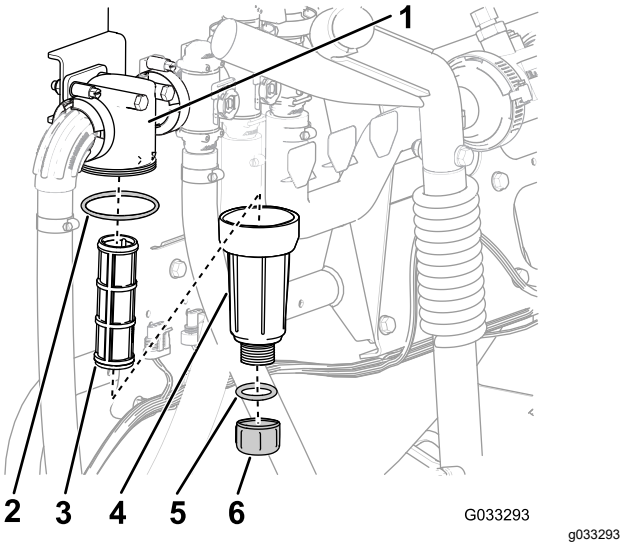

Figure 57

1. Filter head
2. O-ring (bowl)
3. Filter element
4. Bowl
5. O-ring (drain plug)
6. Drain plug

3. Rotate the drain plug counterclockwise and remove it from the bowl of the pressure filter (Figure 57).

   Note: Allow the bowl to drain completely.

4. Rotate the bowl counterclockwise and remove from its filter head (Figure 57).
5. Remove the old pressure filter element (Figure 57).

   Note: Discard the old filter.

6. Check the O-ring for the drain plug (located inside the bowl) and the O-ring for bowl (located inside the filter head) for damage and wear (Figure 57).

   Note: Replace any damaged or worn O-rings for the plug, bowl, or both.

7. Install the new pressure filter element into the filter head (Figure 57).

   Note: Ensure that the filter element is firmly seated into the filter head.

8. Install the bowl onto the filter head and tighten by hand (Figure 57).
9. Install the plug into the bowl and tighten by hand (Figure 57).

Changing the Nozzle Filter

Note: Determine the appropriate nozzle filter mesh size that you need for your job; refer to Selecting a Nozzle-Tip Filter (Optional) (page 25).

1. Park the machine on a level surface, engage the parking brake, shut off the sprayer pump, shut off the engine, and remove the key.
2. Remove the nozzle from the spray turret (Figure 58).

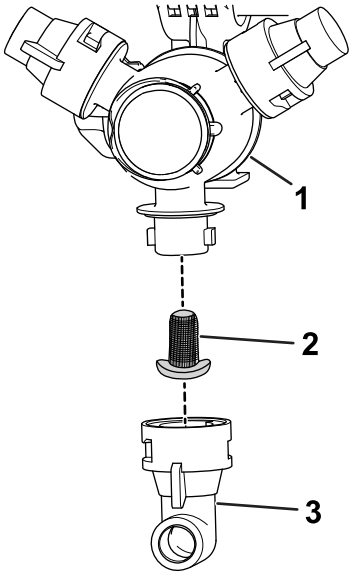

Figure 58

1. Spray turret
2. Nozzle filter
3. Nozzle

3. Remove the old nozzle filter (Figure 58).

   Note: Discard the old filter.

4. Install the new nozzle filter (Figure 58).

   Note: Ensure that the filter is fully seated.

5. Install the nozzle onto the spray turret (Figure 58).

Inspecting the Pump

Service Interval: Every 400 hours/Yearly (whichever comes first)—Inspect the pump diaphragms and replace if necessary (see an authorized Toro distributor).

Every 400 hours/Yearly (whichever comes first)—Inspect the pump check valves and replace if necessary (see an authorized Toro distributor).

Note: The following machine components are considered parts subject to consumption through use

unless found defective and are not covered by the warranty associated with this machine.

Have an authorized Toro distributor check following internal pump components for damage:

- Pump diaphragms
- Pump check valves assemblies

Replace any components, if necessary.

Inspecting the Nylon Pivot Bushings

Service Interval: Every 400 hours/Yearly (whichever comes first)

1. Park the machine on a level surface, engage the parking brake, shut off the pump, shut off the engine, and remove the key.
2. Extend the outer-boom sections to the spray position and support the booms using stands or straps and lifting equipment.
3. With the weight of the boom supported, remove the bolt and nut securing the pivot pin to the boom assembly (Figure 59).

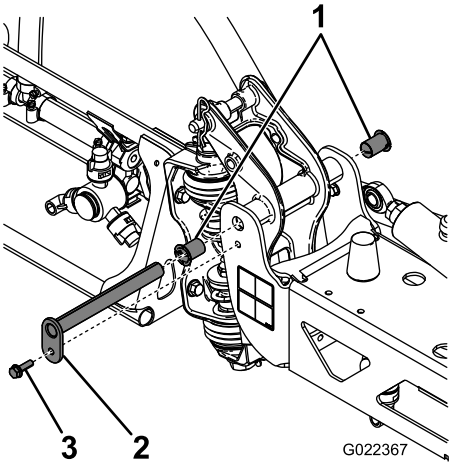

g022367

Figure 59

1. Nylon bushings
2. Pivot pin
3. Bolt

4. Remove the bolt and nut that secure the pivot pin, and remove the pin (Figure 59).
5. Remove the boom and pivot bracket assembly from the center frame to access the nylon bushings.
6. Remove and inspect the nylon bushings from the front and back sides of the pivot bracket (Figure 59).

   Note: Replace any worn or damaged bushings.

7. Place a small amount of oil on the nylon bushings, and install them into pivot bracket (Figure 59).
8. Install the boom and pivot bracket assembly into the center frame, aligning the holes (Figure 59).
9. Install the pivot pin and secure it with the bolt and nut removed in step 4.
10. Repeat steps 2 through 9 for the other outer-boom section.

Adjusting the Booms to Level

Use the following procedure to adjust the level of the left and right booms sections when they are in the spray position.

1. Extend the booms to the spray position.
2. Remove the cotter pin from the pivot pin (Figure 60).

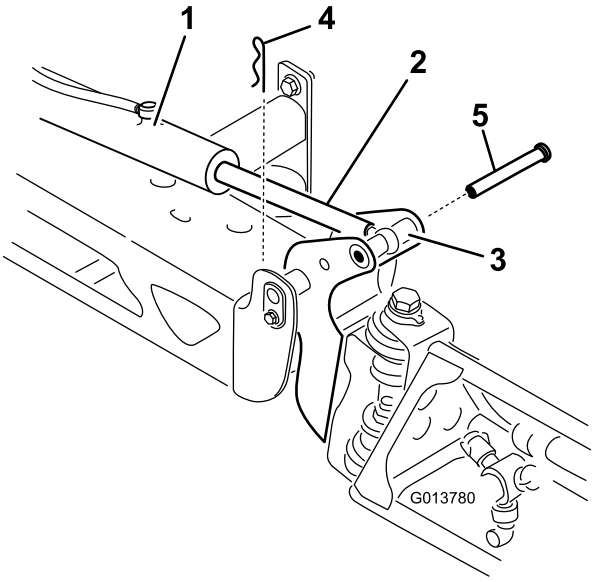

g013780

Figure 60

1. Actuator
2. Actuator rod
3. Boom-pivot pin housing
4. Cotter
5. Pin

3. Lift up on the boom and remove the pin (Figure 60), and slowly lower the boom to the ground.
4. Inspect the pin for any damage and replace it if necessary.
5. Use a wrench on the flat sides of the actuator rod to immobilize it, then loosen the jam nut to allow the eyelet rod to be adjusted (Figure 61).

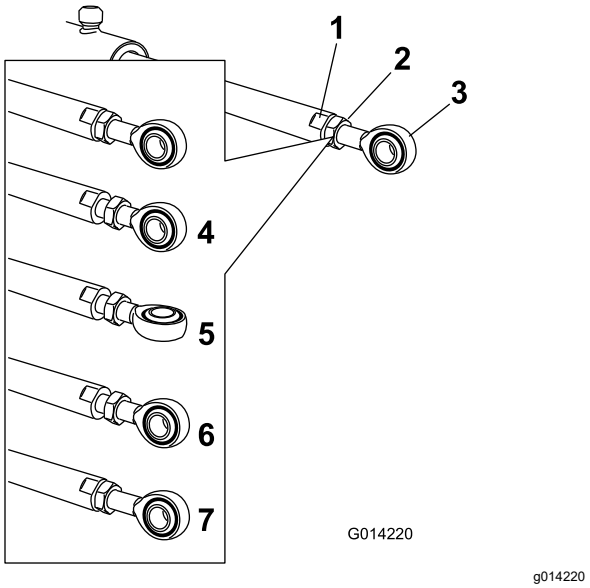

Figure 61

1. Flat on the actuator rod
2. Jam nut
3. Eyelet
4. Jam nut loosened
5. Eyelet adjusted
6. Eyelet position for assembly
7. Jam nut tightened to lock new position

6. Turn the eyelet rod in the actuator rod to shorten or lengthen the extended actuator to the desired position (Figure 61).

   Note: You must turn the eyelet rod in half or complete revolutions so that you can assemble the rod to the boom.

7. Once the desired position has been achieved, tighten the jam nut to secure the actuator and eyelet rod.
8. Raise the boom to align the pivot with the actuator rod.
9. While holding the boom, insert the pin through both boom pivot and actuator rod (Figure 60).
10. With the pin in place, release the boom and secure the pin with the cotter previously removed.
11. Repeat the procedure for each actuator rod bearing, if necessary.

Cleaning

Important: **Do not use brackish or reclaimed water to clean the machine.**

Cleaning the Flow Meter

Service Interval: Every 200 hours/Yearly (whichever comes first) (more often when using wettable powders).

1. Thoroughly rinse and drain the entire spraying system.
2. Remove the flow meter from the sprayer and flush it with clean water.
3. Remove the retainer ring on the upstream side.

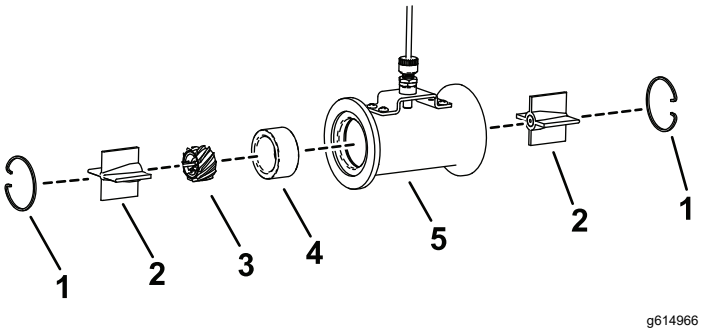

Figure 62

1. Retaining ring
2. Bearing assembly
3. Turbine
4. Collar
5. Housing

4. Clean the turbine, bearing assembly, and the collar to remove metal filings and any wettable powders.

   Important: **Add a mark onto the turbine to indicate installation direction. It is important to install it the same way it is being removed.**

5. Inspect the face of the turbine for wear. Turn the flow meter 180 degrees for installation if the face is showing signs of wear.

   Note: If both sides of the turbine show wear, replace the flow meter.

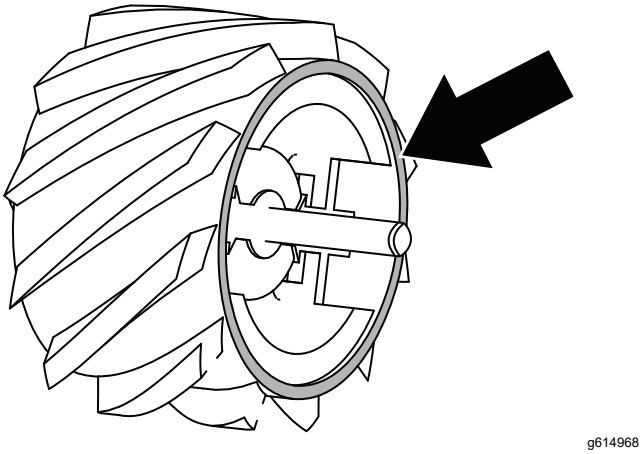

Figure 63

6. Inspect the shaft end for cupping wear.
   - A—the shaft is showing no wear; the turbine is usable.
   - B—the cupping is inside the bevel; rotate the turbine 180 degrees.
   - C—the cupping is nearly at the edge; rotate the turbine 180 degrees.
   - D—the cupping is at the edge and is flaring out; replace the flow meter.

   Note: If both shaft ends are showing wear, replace the flow meter.

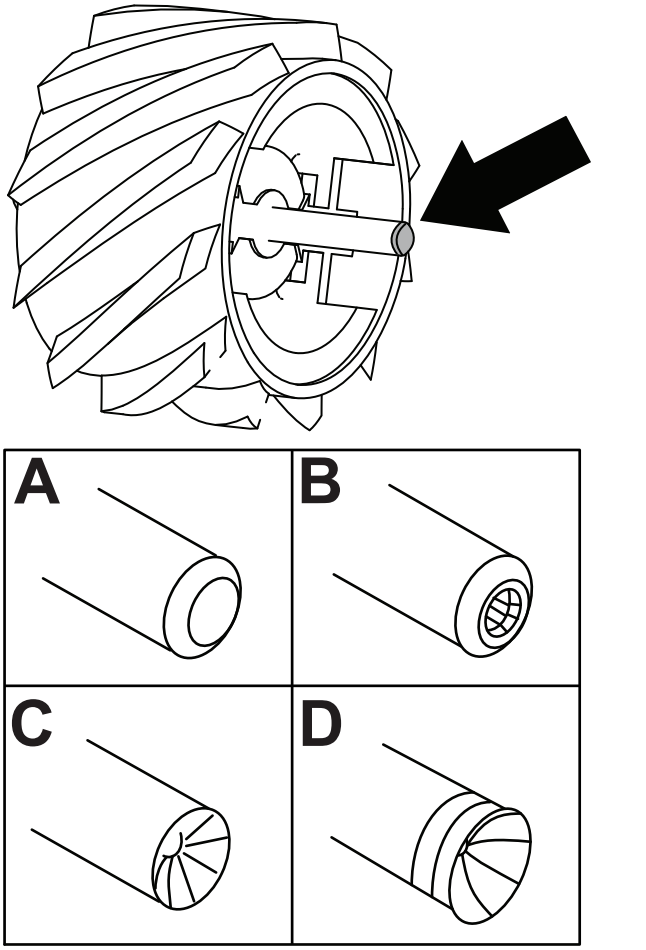

Figure 64

7. Assemble the flow meter.
8. Use a low pressure (50 kPa or 5 psi) air jet to ensure that the turbine spins freely.
9. Calibrate the flow meter; refer to your *Software Guide*.

Storage

Storage Safety

- Before you leave the operator's position, do the following:
  - Park the machine on a level surface.
  - Shut off the spray pump.
  - Engage the parking brake.
  - Shut off the engine and remove the key (if equipped).
  - Wait for all movement to stop.
  - Allow the machine to cool before adjusting, servicing, cleaning, or storing it.
- Do not store the machine or fuel container where there is an open flame, spark, or pilot light, such as on a water heater or other appliance.

Preparing the Spray System

1. Position the sprayer on a level surface, engage the parking brake, shut off the pump, shut off the engine, and remove the key.
2. Clean dirt and grime from the entire machine, including the outside of the engine cylinder head fins and blower housing.

   Important: **You can wash the machine with mild detergent and water. *Do not* use *high-pressure water* to wash the machine. Pressure washing may damage the electrical system or wash away necessary grease at friction points. Avoid excessive use of water, especially near the control panel, lights, engine, and the battery.**
3. Clean the spray system; refer to Cleaning (page 60).
4. Condition the sprayer system as follows:
   A. Drain the fresh-water tank.
   B. Drain the spray system as completely as possible.
   C. Prepare rust inhibiting, non-alcohol based, RV antifreeze solution per the manufacturer's instructions.
   D. Add the RV antifreeze solution to the fresh-water tank, the sprayer tank, and if installed the optional rinse tank.
   E. If installed, pump the RV antifreeze solution in the optional rinse tank into the spray tank.
   F. Run the sprayer pump for a few minutes to circulate the RV antifreeze throughout the sprayer system and any installed spray accessories.

      Spray the RV antifreeze solution out of the spray nozzles.
   G. Drain the fresh-water tank and spray system as completely as possible.
5. Use the boom-section lift switches to raise the outer-boom sections. Raise the sections until they have moved completely into the boom-transport cradle, forming the 'X' transport position and the section cylinders are fully retracted.

   Note: Make sure that the section cylinders are fully retracted to prevent actuator rod damage.

Performing the Service Procedures

1. Inspect the brakes.
2. Service the air cleaner.
3. Grease the sprayer.
4. Change the engine oil
5. Check the air pressure in the tires.

Preparing the Engine and Battery

1. For storage over 30 days, prepare the fuel system as follows:
   A. Add a petroleum based stabilizer/conditioner to fuel in the tank.

      Follow mixing instructions from stabilizer manufacturer. Do not use an alcohol based stabilizer (ethanol or methanol).

      Note: Fuel stabilizer/conditioner is most effective when mixed with fresh gasoline throughout the year.
   B. Run the engine to distribute conditioned fuel through the fuel system (5 minutes).
   C. Shut off the engine, allow it to cool, and drain the fuel tank.
   D. Start the engine and run it until it stops.
   E. Start and run the engine until it does not start again.
   F. Dispose of fuel properly. Recycle as per local codes.

      Important: **Do not store stabilizer/conditioned fuel over 90 days.**
2. Remove the spark plugs and check their condition.

3. With the spark plugs removed from the engine, pour 2 tablespoons of engine oil into the spark plug hole.
4. Use the electric starter to crank the engine and distribute the oil inside the cylinder.
5. Install the spark plugs and tighten to recommended torque.

   Note: Do not install the wire on the spark plug(s).
6. Remove the battery from the chassis, check the electrolyte level, and charge it fully.

   Note: Do not connect the battery cables to the battery posts during storage.

   Important: **The battery must be fully charged to prevent it from freezing and being damaged at temperatures below 0°C (32°F). A fully charged battery maintains its charge for about 50 days at temperatures lower than 4°C (40°F). If the temperatures will be above 4°C (40°F), check the water level in the battery and charge it every 30 days.**

Preparing the Machine

1. Check and tighten all bolts, nuts, and screws. Repair or replace any part that is damaged.
2. Check the condition of all spray hoses, replacing any that are damaged or worn.
3. Tighten all hose fittings.
4. Paint all scratched or bare metal surfaces. Paint is available from your authorized Toro distributor.
5. Store the machine in a clean, dry garage or storage area.
6. Remove the ignition key and put it in a safe place out of the reach of children.
7. Cover the machine to protect it and keep it clean.

Troubleshooting

Troubleshooting the Engine and Machine

Problem	Possible Cause	Corrective Action
The starter does not crank.	1. The range selector is in a gear other than NEUTRAL. 2. The electrical connections are corroded or loose. 3. A fuse is blown or loose. 4. The battery is discharged. 5. The safety-interlock system is malfunctioning. 6. A starter or starter solenoid is broken. 7. The internal engine components have seized.	1. Press the brake pedal and move the range selector to the NEUTRAL position. 2. Check the electrical connections for good contact. 3. Correct or replace fuse. 4. Charge or replace the battery. 5. Contact your authorized Toro distributor. 6. Contact your authorized Toro distributor. 7. Contact your authorized Toro distributor.
The engine cranks but does not start.	1. The fuel tank is empty. 2. Dirt, water, or stale fuel is in the fuel system. 3. The fuel line is clogged. 4. The spark plug lead is disconnected. 5. A spark plug is damaged or dirty. 6. The kill relay is not energized. 7. The ignition is broken.	1. Fill the tank with fresh fuel. 2. Drain and flush the fuel system; add fresh fuel. 3. Clean or replace the fuel system. 4. Connect the spark plug. 5. Replace the spark plug. 6. Contact your authorized Toro distributor. 7. Contact your authorized Toro distributor.
The engine starts but does not keep running.	1. The fuel tank vent is restricted. 2. Dirt or water is in the fuel system. 3. The fuel filter is clogged. 4. A fuse is blown or loose. 5. The fuel pump is broken. 6. The throttle body is broken. 7. There are loose wires or poor connections. 8. The cylinder head gasket is broken.	1. Replace the fuel cap. 2. Drain and flush the fuel system; add fresh fuel. 3. Replace the fuel filter. 4. Correct or replace the fuse. 5. Contact your authorized Toro distributor. 6. Contact your authorized Toro distributor. 7. Check and tighten wire connections. 8. Contact your authorized Toro distributor.
The engine runs but knocks or misses.	1. Dirt, water, or stale fuel is in the fuel system. 2. A spark plug lead is loose. 3. A spark plug is broken. 4. There are loose wires or poor connections. 5. The engine is overheating.	1. Drain and flush the fuel system; add fresh fuel. 2. Connect the spark plug lead. 3. Replace the spark plug. 4. Check and tighten wire connections. 5. Refer to causes and actions in *The Engine Overheats* section.

Problem	Possible Cause	Corrective Action
The engine does not idle.	1. The fuel tank vent is restricted. 2. Dirt, water, or stale fuel is in the fuel system. 3. A spark plug is damaged or broken. 4. The fuel pump is broken. 5. There is low compression. 6. The air-cleaner element is dirty.	1. Replace the fuel cap. 2. Drain and flush the fuel system; add fresh fuel. 3. Replace the spark plug. 4. Contact your authorized Toro distributor. 5. Contact your authorized Toro distributor. 6. Clean or replace the element.
The engine overheats.	1. The crankcase-oil level is incorrect. 2. There is excessive loading. 3. The air-intake screens are dirty. 4. The cooling fins and air passages under the engine blower housing and/or the rotating air-intake screen are plugged. 5. The fuel mixture is lean.	1. Fill or drain to the FULL mark. 2. Reduce the load; use lower ground speed. 3. Clean with every use. 4. Clean with every use. 5. Contact your authorized Toro distributor.
The engine loses power.	1. The crankcase-oil level is incorrect. 2. The air-cleaner element is dirty. 3. Dirt, water, or stale fuel is in the fuel system. 4. The engine is overheated. 5. A spark plug is damaged or dirty. 6. The vent hole in the fuel tank vent fitting is plugged. 7. There is low compression.	1. Fill or drain to the FULL mark. 2. Clean or replace. 3. Drain and flush the fuel system; add fresh fuel. 4. Refer to causes and actions in *The Engine Overheats* section. 5. Replace the spark plug. 6. Replace the fuel cap. 7. Contact your authorized Toro distributor.
There is abnormal vibration or noise.	1. The engine mounting bolts are loose. 2. There is a problem with the engine.	1. Tighten the engine mounting bolts. 2. Contact your authorized Toro distributor.
The machine does not operate or is sluggish in either direction because the engine bogs down or stalls.	1. The parking brake is set.	1. Release the parking brake.
The machine does not operate in either direction.	1. The range selector is in the NEUTRAL position. 2. The parking brake is engaged or the parking brake is not releasing. 3. The transmission is broken. 4. The control linkage needs adjustment or replacement. 5. The driveshaft or wheel-hub key has been damaged.	1. Press the brake and shift the range selector into a gear. 2. Release the parking brake or check the linkage. 3. Contact your authorized Toro distributor. 4. Contact your authorized Toro distributor. 5. Contact your authorized Toro distributor.

Troubleshooting the Spray System

Problem	Possible Cause	Corrective Action
A section does not spray.	1. The electrical connection on the section valve is dirty or disconnected. 2. There is a blown fuse. 3. There is a pinched hose. 4. A section bypass is improperly adjusted. 5. The section valve is damaged. 6. The electrical system is damaged.	1. Turn the valve off manually. Disconnect the electrical connector on the valve and clean all leads, then connect it. 2. Check the fuses and replace them as necessary. 3. Repair or replace the hose. 4. Adjust the section bypass. 5. Contact your Authorized Service Dealer. 6. Contact your Authorized Service Dealer.
A section does not turn off.	1. The section valve is damaged.	1. Disassemble the section valve; refer to the section Cleaning the Sprayer Valves. Inspect all the parts and replace any that are damaged.
A section valve is leaking.	1. A seal or valve seat is worn or damaged.	1. Disassemble the valve and replace the seals using the Valve Repair Kit; contact your authorized Toro distributor.
The spray nozzle(s) drip when the section switch(es) is shut off	1. Debris has accumulated between the nozzle body and the check-valve diaphragm.	1. Clean the nozzle body and diaphragm; refer to Cleaning the Nozzle Body and Check-Valve Diaphragm.
A pressure drop occurs when you turn on a section.	1. The section bypass is improperly adjusted. 2. There is an obstruction in the section valve body. 3. A nozzle filter is damaged or clogged.	1. Adjust the section bypass. 2. Remove the inlet and outlet connections to the section valve and remove any obstructions. 3. Remove and inspect all nozzles.
When you shut off the sections, there is a pressure change when you switch the agitation switch to the ON position.	1. The agitation-bypass valve is not calibrated.	1. Calibrate the agitation-bypass valve.
When spraying with multiple sections, the pressure changes when you shut off a section.	1. The section bypass valve is not calibrated for the selected spray nozzles.	1. Calibrate the section-bypass valve.
At the end of the spray job, there is more fluid in the tank than expected.	1. The fluid requirement was not calculated correctly 2. The spray system is not calibrated	1. Refer to the nozzle chart for the correct nozzle for the application rate. 2. Perform a flow calibration and a speed calibration.
The spray tank runs out of fluid during the spray job unexpectedly.	1. The fluid requirement was not calculated correctly. 2. The spray system is not calibrated.	1. Refer to the nozzle chart for the correct nozzle for the application rate. 2. Perform a flow calibration and a speed calibration.

Schematics

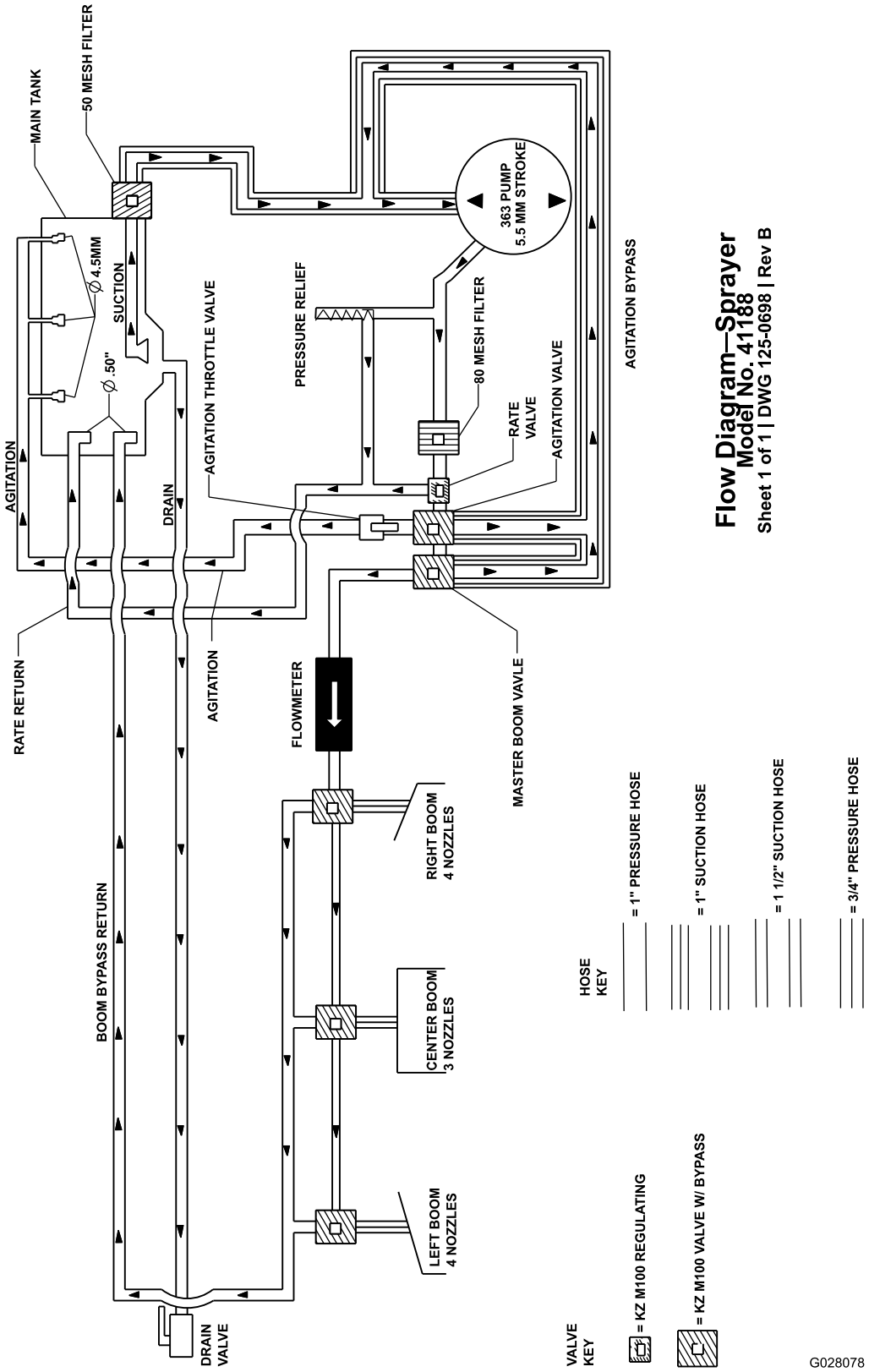

Sprayer System Schematic (Rev. DWG 125-0698 Rev B)

California Proposition 65 Warning Information

What is this warning?

You may see a product for sale that has a warning label like the following:

WARNING: Cancer and Reproductive Harm—www.p65Warnings.ca.gov.

What is Prop 65?

Prop 65 applies to any company operating in California, selling products in California, or manufacturing products that may be sold in or brought into California. It mandates that the Governor of California maintain and publish a list of chemicals known to cause cancer, birth defects, and/or other reproductive harm. The list, which is updated annually, includes hundreds of chemicals found in many everyday items. The purpose of Prop 65 is to inform the public about exposure to these chemicals.

Prop 65 does not ban the sale of products containing these chemicals but instead requires warnings on any product, product packaging, or literature with the product. Moreover, a Prop 65 warning does not mean that a product is in violation of any product safety standards or requirements. In fact, the California government has clarified that a Prop 65 warning "is not the same as a regulatory decision that a product is 'safe' or 'unsafe.'" Many of these chemicals have been used in everyday products for years without documented harm. For more information, go to https://oag.ca.gov/prop65/faqs-view-all.

A Prop 65 warning means that a company has either (1) evaluated the exposure and has concluded that it exceeds the "no significant risk level"; or (2) has chosen to provide a warning based on its understanding about the presence of a listed chemical without attempting to evaluate the exposure.

Does this law apply everywhere?

Prop 65 warnings are required under California law only. These warnings are seen throughout California in a wide range of settings, including but not limited to restaurants, grocery stores, hotels, schools, and hospitals, and on a wide variety of products. Additionally, some online and mail order retailers provide Prop 65 warnings on their websites or in catalogs.

How do the California warnings compare to federal limits?

Prop 65 standards are often more stringent than federal and international standards. There are various substances that require a Prop 65 warning at levels that are far lower than federal action limits. For example, the Prop 65 standard for warnings for lead is 0.5 µg/day, which is well below the federal and international standards.

Why don't all similar products carry the warning?

- Products sold in California require Prop 65 labelling while similar products sold elsewhere do not.
- A company involved in a Prop 65 lawsuit reaching a settlement may be required to use Prop 65 warnings for its products, but other companies making similar products may have no such requirement.
- The enforcement of Prop 65 is inconsistent.
- Companies may elect not to provide warnings because they conclude that they are not required to do so under Prop 65; a lack of warnings for a product does not mean that the product is free of listed chemicals at similar levels.

Why does Toro include this warning?

Toro has chosen to provide consumers with as much information as possible so that they can make informed decisions about the products they buy and use. Toro provides warnings in certain cases based on its knowledge of the presence of one or more listed chemicals without evaluating the level of exposure, as not all the listed chemicals provide exposure limit requirements. While the exposure from Toro products may be negligible or well within the "no significant risk" range, out of an abundance of caution, Toro has elected to provide the Prop 65 warnings. Moreover, if Toro does not provide these warnings, it could be sued by the State of California or by private parties seeking to enforce Prop 65 and subject to substantial penalties.