FORM NO. 3312-790

TORO®

MODEL NO. 20624-6000001 & Up

**PARTS CATALOG**

# 21" S.P. REAR BAGGER KEY LECTRIC

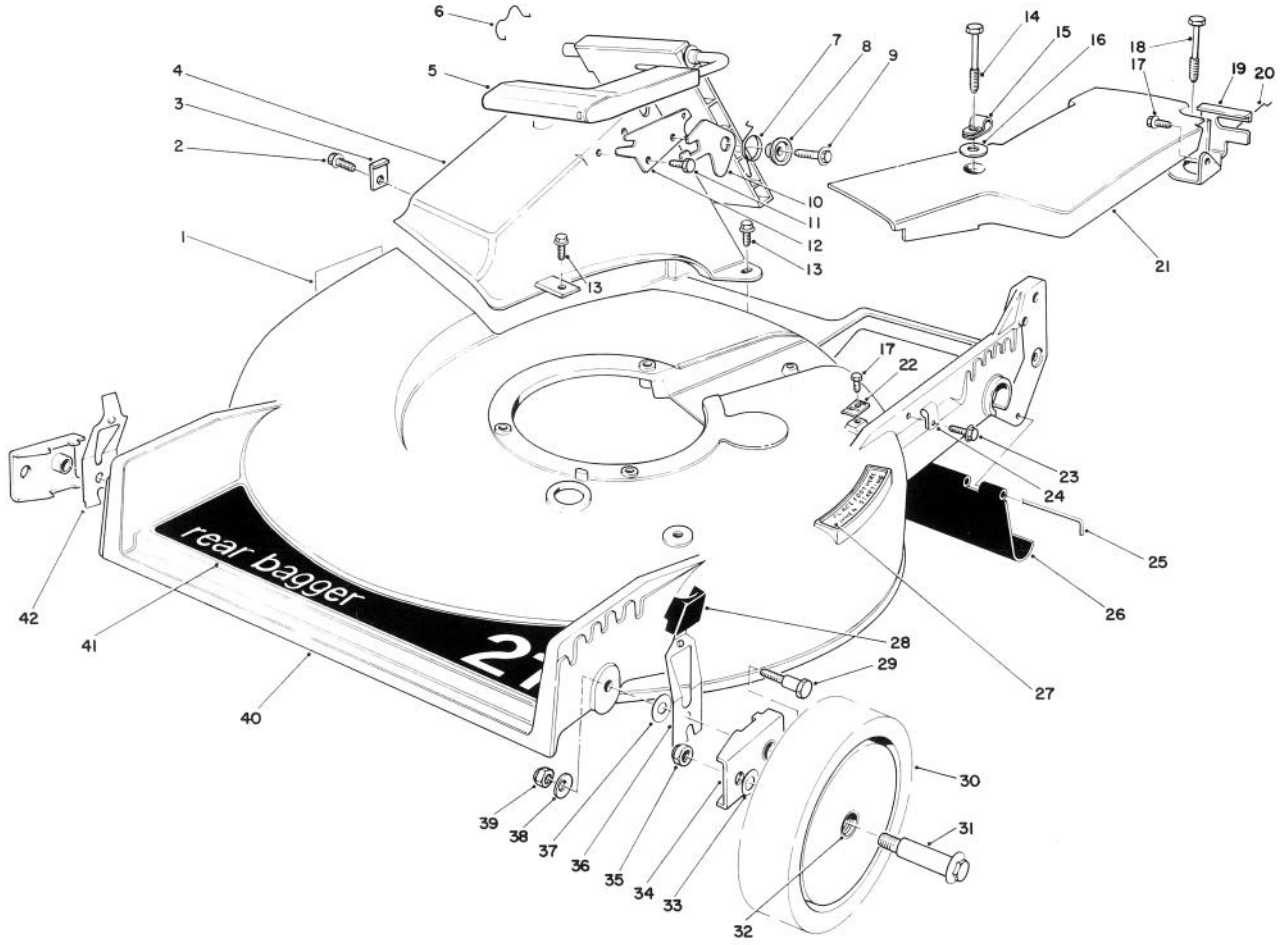


## HOUSING ASSEMBLY

| Ref. No. | Part No. | Description | No. Used |
|---|---|---|---|
| 1 | 43-8480 | Decal — Danger | 1 |
| 2 | 12-3270 | Screw — Thread Forming | 1 |
| 3 | 47-6540 | Clip — Tunnel | 1 |
| 4 | 46-3500 | Tunnel — Discharge | 1 |
| 5 | 51-0200 | Discharge Door Assembly | 1 |
| 6 | 47-5840 | Retainer — Door | 1 |
| 7 | 33-4860 | Spring — Torsion | 1 |
| 8 | 43-4840 | Spacer — Latch | 1 |
| 9 | 46-8091 | Screw — Self Tapping, Hex Washer Hd. | 1 |
| 10 | 42-4010 | Latch — Safety | 1 |
| 11 | 46-8090 | Screw — Self Tapping, Hex Washer Hd. | 1 |
| 12 | 23-1040 | Plate — Latch | 1 |
| 13 | 46-6811 | Screw — Hex Washer Hd. | 3 |
| 14 | 37-7262 | Capscrew — Special | 1 |
| 15 | 2412-87 | Clamp — Cable | 1 |
| 16 | 3-5792 | Washer — Flat | 1 |
| 17 | 32144-11 | Screw — Thread Forming, Hex Washer Hd. | 2 |
| 18 | 37-7260 | Capscrew — Special | 1 |
| 19 | 46-5870 | Bracket — Traction Adjustment | 1 |
| 20 | 46-7030 | Retainer — Cable | 1 |
| 21 | 52-7400 | Belt Cover | 1 |
| 22 | 46-5610 | Clamp — Cable | 1 |
| 23 | 12-5450 | Screw — Self Tapping, Slotted Hex Hd. | 1 |
| 24 | 2412-83 | R-Clamp | 1 |

©The Toro Company — 1986

PRICE $1.00

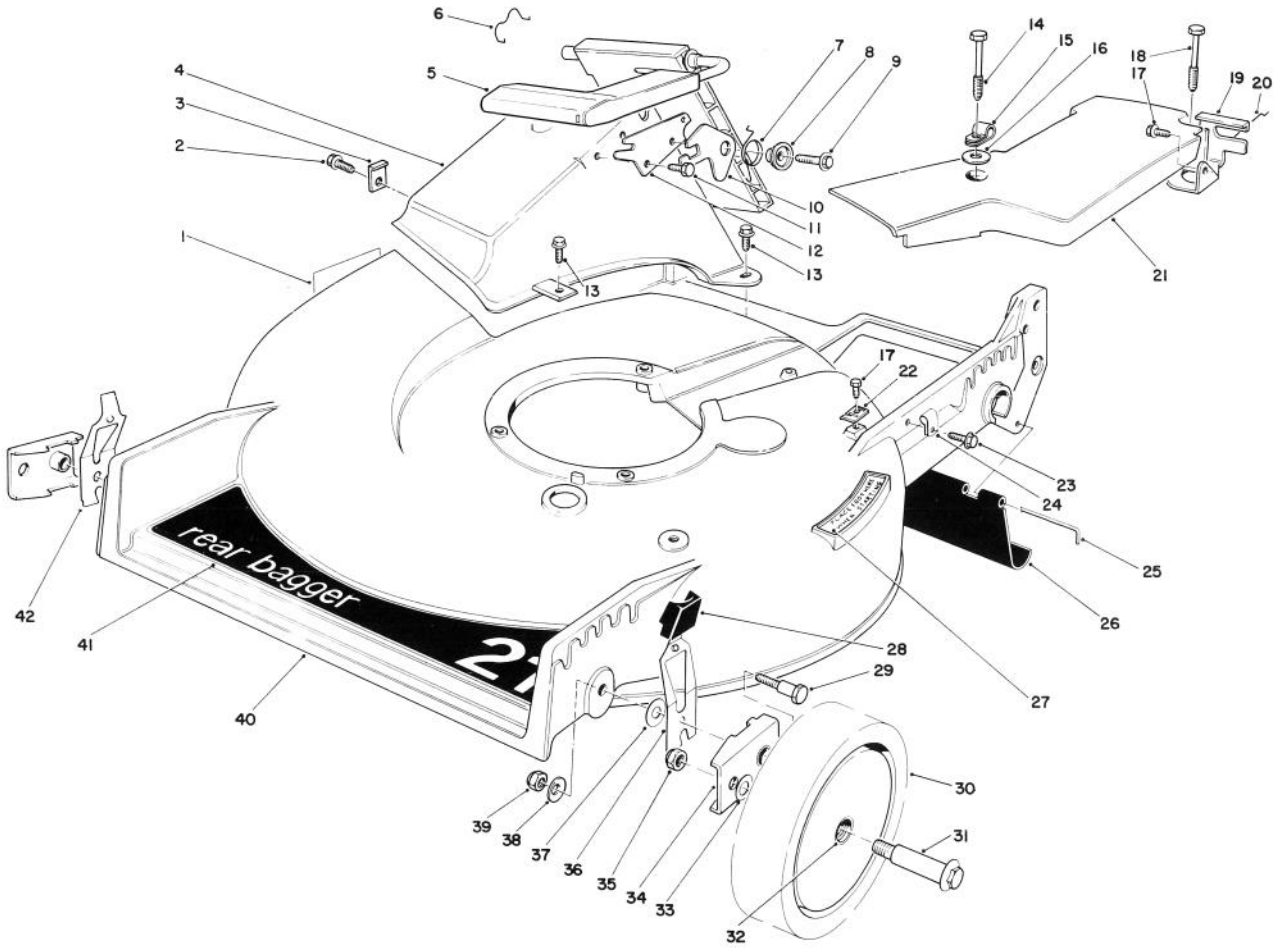


# HOUSING ASSEMBLY (Continued)

| Ref. No. | Part No. | Description | No. Used |
|---|---|---|---|
| 25 | 33-3208 | Rod — Shield | 1 |
| 26 | 44-0580 | Shield — Rear | 1 |
| 27 | 46-7370 | Decal — Step Pad | 1 |
| 28 | 25-7740 | Knob — Spring Arm | 2 |
| 29 | 44-5270 | Screw — Pivot | 2 |
| 30 | 11-9509 | Wheel & Tire Assembly (Incl. Ref. #32) | 2 |
| 31 | 27-6230 | Bolt — Wheel | 2 |
| 32 | 27-6250 | Bushing — Wheel | 4 |
| 33 | 40-1940 | Washer — Wheel Bolt | 2 |

| Ref. No. | Part No. | Description | No. Used |
|---|---|---|---|
| 34 | 47-2940 | Arm — Pivot | 2 |
| 35 | 52-3620 | Locknut | 2 |
| 36 | 52-7480 | Spring Arm Assembly L.H. | 1 |
| 37 | 5-4460 | Washer — Pivot | 2 |
| 38 | 3290-456 | Washer — Belleville | 2 |
| 39 | 3296-29 | Locknut | 2 |
| 40 | 11-4099 | Housing (Incl. Ref. #1, 13 & 27) | 1 |
| 41 | 44-0450 | Decal — 21" Rear Bagger | 1 |
| 42 | 52-7490 | Spring Arm Assembly R.H. | 1 |

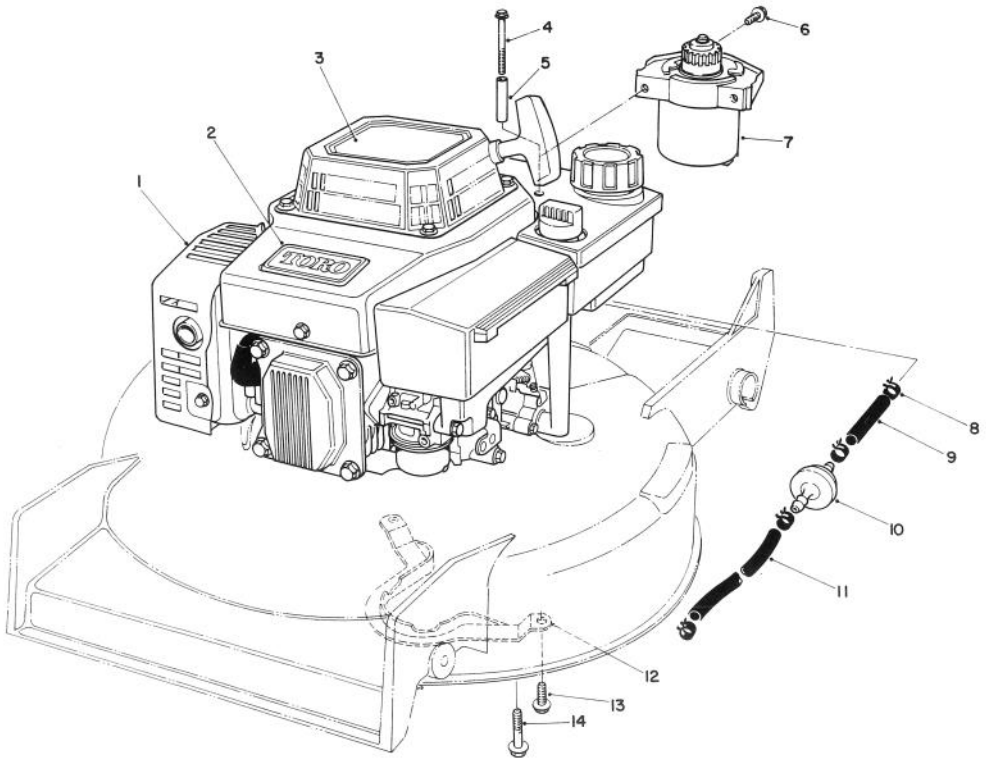


# ENGINE ASSEMBLY

| Ref. No. | Part No. | Description | No. Used |
|---|---|---|---|
| 1 | | Engine | 1 |
| 2 | 46-8290 | Plate — Toro | 1 |
| 3 | 56-6290 | Decal — Recoil | 1 |
| 4 | 56-6610 | Screw — Thread Forming | 2 |
| 5 | 57-3830 | Spacer — Tubular | 2 |
| 6 | 56-6380 | Screw — Thread Forming | 2 |
| 7 | 53-4500 | Starter Motor Assembly | 1 |

| Ref. No. | Part No. | Description | No. Used |
|---|---|---|---|
| 8 | 2412-95 | Clamp — Fuel Line | 4 |
| 9 | 51-3211 | Line — Fuel | 1 |
| 10 | 56-6360 | Filter — Fuel | 1 |
| 11 | 51-3214 | Line — Fuel | 1 |
| 12 | 40-5720 | Guide — Belt | 1 |
| 13 | 11-9760 | Screw — Thread Forming | 2 |
| 14 | 11-0590 | Screw — Thread Forming | 4 |

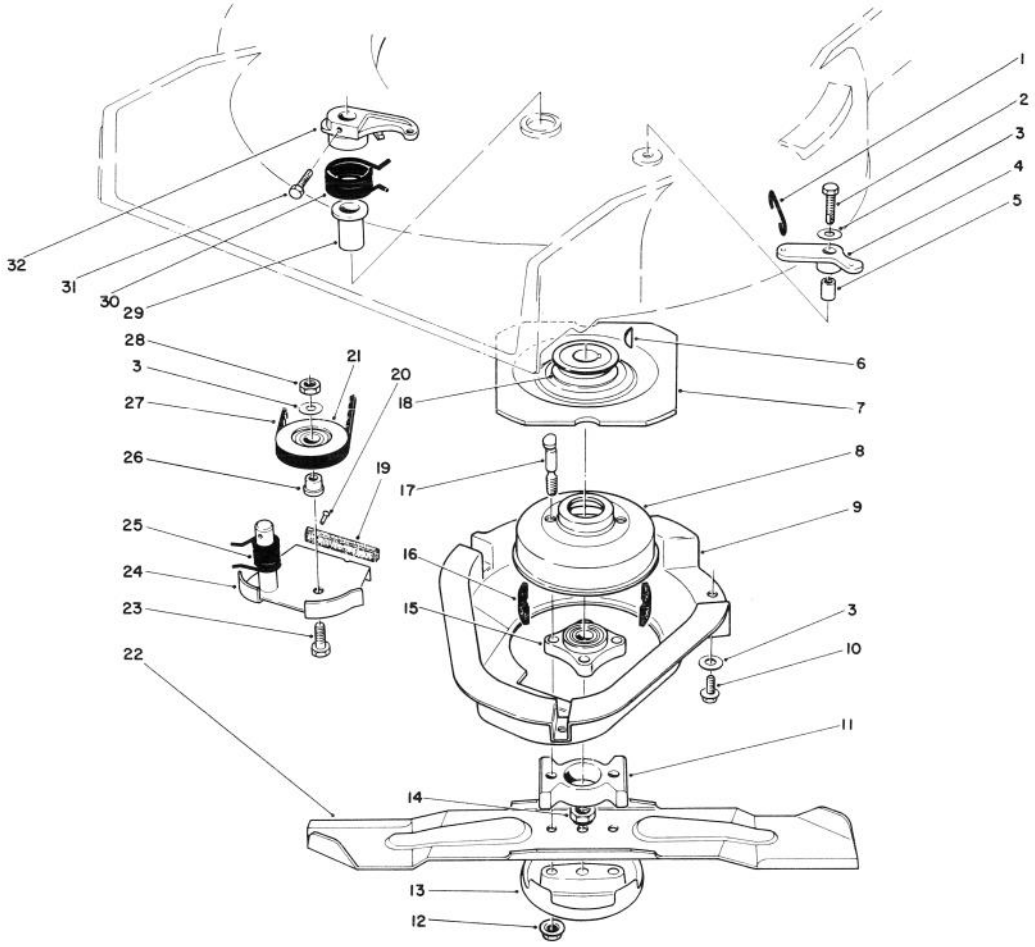


# BLADE BRAKE CLUTCH ASSEMBLY

| Ref. No. | Part No. | Description | No. Used |
|---|---|---|---|
| 1 | 49-2810 | Link — Control | 1 |
| 2 | 32104-107 | Screw — Hex Hd. Self Tapping | 1 |
| 3 | 3256-23 | Washer — Plain | 5 |
| 4 | 49-7960 | Crank — Bell | 1 |
| 5 | 49-7950 | Sleeve — Bell Crank | 1 |
| 6 | 3257-3 | Key — Woodruff | 1 |
| 7 | 56-6160 | Flywheel | 1 |
| 8 | 56-6170 | Drum — Brake | 1 |
| 9 | 46-5690 | Shield | 1 |
| 10 | 32144-11 | Screw — Hex Washer Hd. | 3 |
| 11 | 42-6760 | Spacer — Blade | 1 |
| 12 | 54-9190 | Locknut | 2 |
| 13 | 42-0910 | Cup — Anti Scalp | 1 |
| 14 | 3296-33 | Locknut | 1 |
| 15 | 42-6890 | Hub Assembly | 1 |
| 16 | 52-3480 | Dampener — Vibration | 2 |
| 17 | 42-3190 | Bolt — Brake | 2 |

| Ref. No. | Part No. | Description | No. Used |
|---|---|---|---|
| 18 | 56-6180 | Pulley — Driver | 1 |
| 19 | | Pad — Brake | 1 |
| 20 | 3295-23 | Rivet — Semi Tubular | 2 |
| 21 | 46-5650 | Pulley — Idler | 1 |
| 22 | 42-1000 | Blade — 21" | 1 |
| 23 | 322-16 | Capscrew — Hex Hd. | 1 |
| 24 | 49-7921 | Brake Plate (Incl. Ref. #19 & 20) | 1 |
| 25 | 46-5670 | Spring — Torsion Lower | 1 |
| 26 | 46-5630 | Hub — Idler Pulley | 1 |
| 27 | 42-0883 | V-Belt | 1 |
| 28 | 3296-47 | Locknut | 1 |
| 29 | 46-6680 | Bushing — Flanged | 1 |
| 30 | 49-7970 | Spring — Torsion Upper | 1 |
| 31 | 32104-96 | Screw — Hex Hd. Self Tapping | 1 |
| 32 | 49-2820 | Lever | 1 |

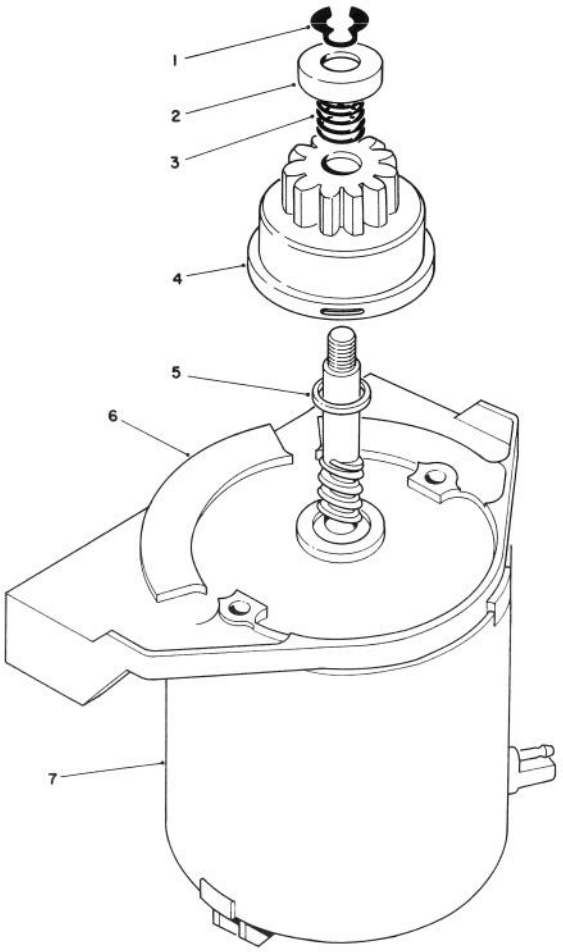


# STARTER MOTOR ASSEMBLY NO. 53-4500

| Ref. No. | Part No. | Description | No. Used |
|---|---|---|---|
| 1 | 32151-47 | Ring — Retaining | 1 |
| 2 | 49-2170 | Pinion Stop | 1 |
| 3 | 44-0500 | Spring — Compression | 1 |
| 4 | 43-4370 | Pinion Assembly | 1 |

| Ref. No. | Part No. | Description | No. Used |
|---|---|---|---|
| 5 | 23-9591 | Spacer | 1 |
| 6 | 53-4490 | Motor — Starter (Incl. Ref. #7) | 1 |
| 7 | 53-4460 | Frame — End | 1 |

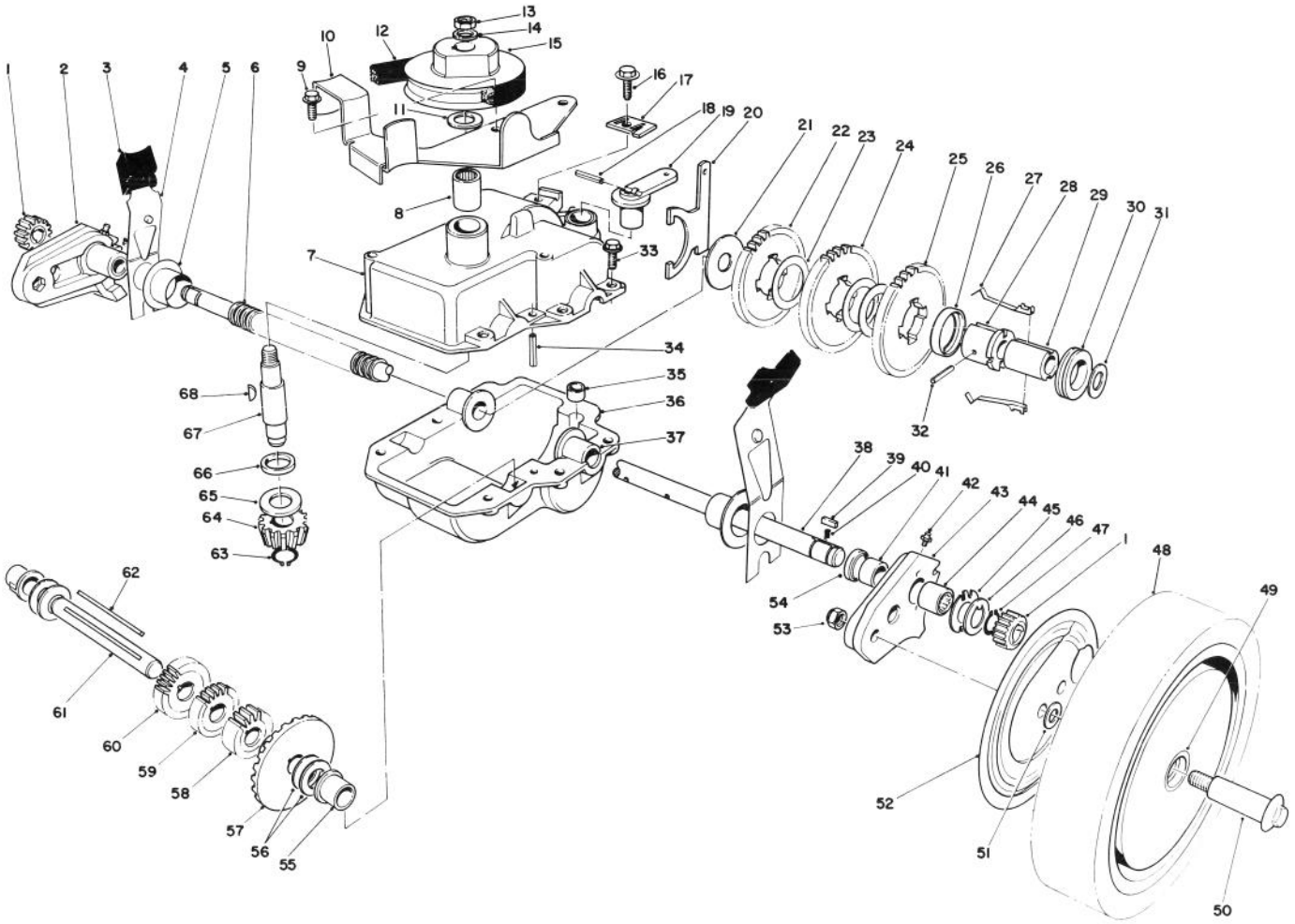

# GEAR CASE ASSEMBLY

| Ref. No. | Part No. | Description | No. Used |
|---|---|---|---|
| 1 | 39-9160 | Pinion | 2 |
| 2 | 49-7720 | Pivot Arm Assembly — R.H. (Incl. Ref. #41, 42, 44 & 54) | 1 |
| 3 | 25-7740 | Knob — Arm | 2 |
| 4 | 44-1010 | Spring Arm Assembly | 2 |
| 5 | 42-3520 | End Cap | 2 |
| 6 | 24-7922 | Cover — Drive Shaft | 1 |
| 7 | 39-7283 | Upper Case | 1 |
| 8 | 47-6720 | Bearing | 1 |
| 9 | 12-3270 | Screw — Special | 2 |
| 10 | 49-8460 | Bracket — Belt Guide | 1 |
| 11 | 36-4790 | Washer — Thrust | 1 |
| 12 | 36-8070 | V-Belt | 1 |
| 13 | 3296-5 | Locknut | 1 |
| 14 | 3256-45 | Washer | 1 |
| 15 | 39-6740 | Pulley | 1 |
| 16 | 32144-11 | Screw — Thread Forming | 1 |
| 17 | 46-5610 | Cable Clamp | 1 |
| 18 | 32121-99 | Coil Pin | 1 |
| 19 | 29-9560 | Lever — Shift | 1 |
| 20 | 29-9520 | Shift Yoke | 1 |
| 21 | 29-9690 | Washer | 1 |
| 22 | 42-4740 | Gear — 38T | 1 |

| Ref. No. | Part No. | Description | No. Used |
|---|---|---|---|
| 23 | 36-4770 | Spacer — Gear | 3 |
| 24 | 29-9271 | Gear — 42T | 1 |
| 25 | 46-3560 | Gear — 52T | 1 |
| 26 | 55-8020 | Key Retainer | 1 |
| 27 | 29-9330 | Key | 2 |
| 28 | 55-8010 | Sleeve — Body | 1 |
| 29 | 39-6720 | Sleeve | 1 |
| 30 | 29-9340 | Shift Collar | 1 |
| 31 | 36-4780 | Washer | 1 |
| 32 | 32121-106 | Coil Pin | 1 |
| 33 | 49-2040 | Screw — Tapping | 6 |
| 34 | 32121-100 | Roll Pin | 1 |
| 35 | 29-9570 | Bushing — Yoke | 1 |
| 36 | 29-9410 | Lower Case | 1 |
| 37 | 47-5220 | Bushing — Output Shaft | 2 |
| 38 | 53-7870 | Output Shaft | 1 |
| 39 | 39-9680 | Key — Rectangular | 2 |
| 40 | 39-9650 | Spring | 2 |
| 41 | 47-2890 | Bushing | 2 |
| 42 | 302-56 | Fitting Grease | 2 |
| 43 | 49-7710 | Pivot Arm Assembly — L.H. (Incl. Ref. #41, 42, 44 & 54) | 1 |
| 44 | 48-2060 | Needle Bearing | 2 |

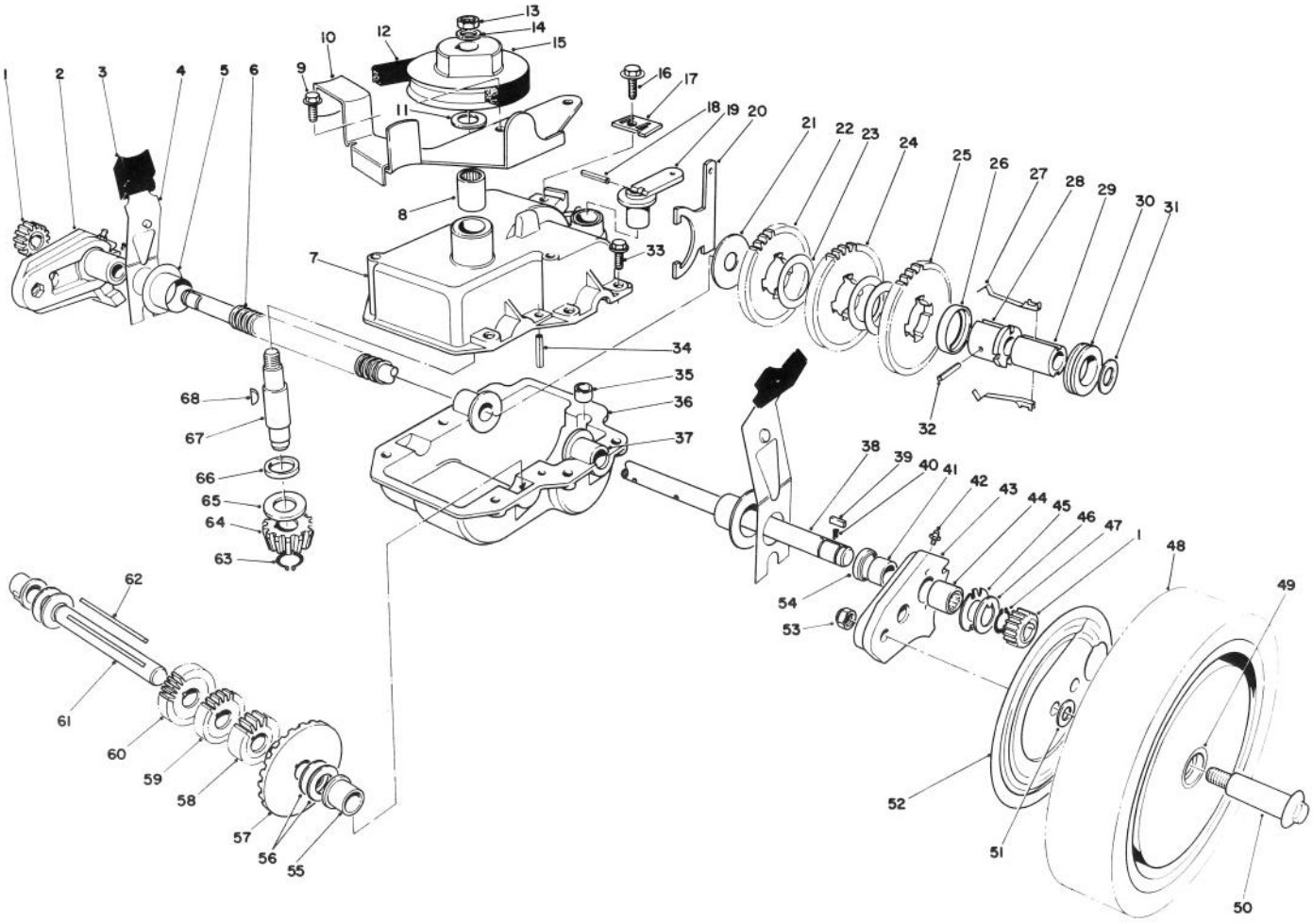

# GEAR CASE ASSEMBLY (Continued)

| Ref. No. | Part No. | Description | No. Used |
|---|---|---|---|
| 45 | 49-7690 | Washer — Thrust, Inner | 2 |
| 46 | 49-7700 | Washer — Thrust, Outer | 2 |
| 47 | 32151-61 | Retaining Ring | 4 |
| 48 | 11-9519 | Wheel, Tire & Gear Assembly (Incl. Ref. #49) | 2 |
| 49 | 27-6250 | Bushing — Wheel | 4 |
| 50 | 27-6231 | Wheel Bolt | 2 |
| 51 | 40-1940 | Washer — Wheel Bolt | 2 |
| 52 | 52-4860 | Cover — Wheel | 2 |
| 53 | 52-3620 | Nut — Lock | 2 |
| 54 | 47-6730 | Seal | 2 |
| 55 | 52-5410 | Bushing — Short Shaft | 2 |
| 56 | 36-4791 | Washer — Thrust | 4 |

| Ref. No. | Part No. | Description | No. Used |
|---|---|---|---|
| 57 | 39-6670 | Gear — Bevel | 1 |
| 58 | 46-3540 | Gear — 12 Tooth | 1 |
| 59 | 46-3550 | Gear — 14 Tooth | 1 |
| 60 | 39-6650 | Gear — 18 Tooth | 1 |
| 61 | 46-9470 | Shaft — Intermediate | 1 |
| 62 | 39-7843 | Key — Square | 1 |
| 63 | 32151-57 | Ring — Retaining | 1 |
| 64 | 39-6660 | Pinion — Bevel | 1 |
| 65 | 47-2910 | Washer — Thrust | 1 |
| 66 | 47-7260 | Seal | 1 |
| 67 | 39-6690 | Input Shaft | 1 |
| 68 | 3257-1 | Key — Woodruff | 2 |
| * | 46-3581 | Gear Case Assembly Complete | 1 |

* Not Illustrated

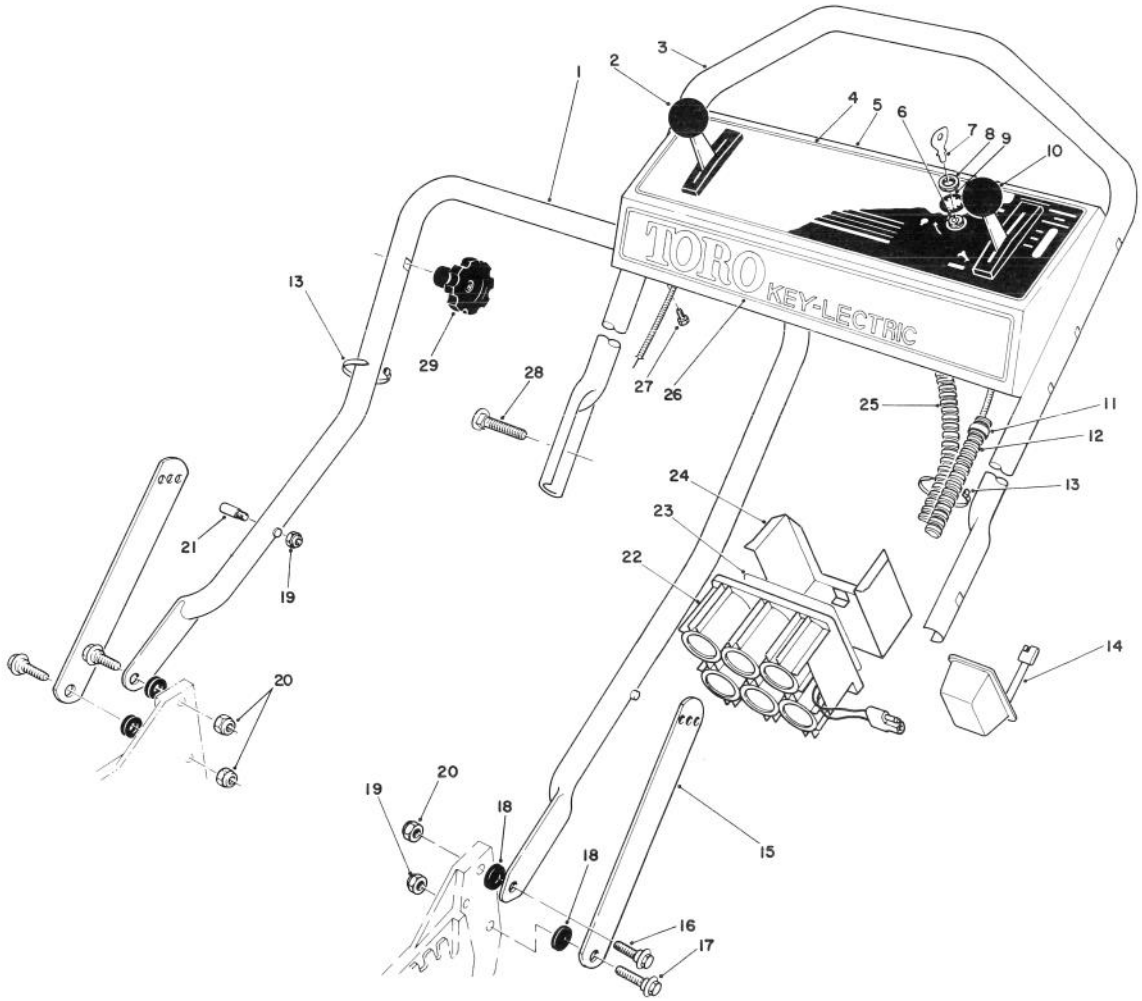


# HANDLE ASSEMBLY

| Ref. No. | Part No. | Description | No. Used |
|---|---|---|---|
| 1 | 43-1361 | Handle — Lower | 1 |
| 2 | 46-6010 | Control — Ground Speed | |
| | | Bend Type #1 | |
| | | Sheath Lg. 42-1/4 inch | |
| | | Wire Lg. 2-1/4 inch | 1 |
| 3 | 46-5411 | Handle — Upper | 1 |
| 4 | 53-4780 | Decal — Instruction Panel | 1 |
| 5 | 12-2369 | Panel — Control | |
| | | (Incl. Ref. #4) | 1 |
| 6 | 46-5780 | Switch — Starter | |
| | | (Incl. Ref. #7-9) | 1 |
| 7 | 218-412 | Keys (Set of 2) | 1 |
| 8 | 218-461 | Nut | 1 |
| 9 | 3254-5 | Lockwasher | 1 |
| 10 | 46-6040 | Control — Throttle | |
| | | Sheath Lg. 55-7/8 inch | |
| | | Wire Lg. 2-1/2 inch | 1 |
| 11 | 2412-50 | Clip — Convoluted Tubing | 4 |

| Ref. No. | Part No. | Description | No. Used |
|---|---|---|---|
| 12 | 46-6440 | Cover — Control Cables | 1 |
| 13 | 3290-378 | Cable Tie | 4 |
| 14 | 6-9780 | Charger — Battery | 1 |
| 15 | 43-1370 | Latch — Handle | 2 |
| 16 | 27-7211 | Screw — Shoulder | 2 |
| 17 | 27-7210 | Screw — Shoulder | 2 |
| 18 | 3-3287 | Spacer — Handle Latch | 4 |
| 19 | 3296-47 | Locknut | 3 |
| 20 | 3296-29 | Locknut | 3 |
| 21† | 49-2750 | Pin — Handle | 2 |
| 22 | 55-7520 | Battery | 1 |
| 23 | 55-8190 | Decal — Charging Instructions | 1 |
| 24 | 55-8180 | Retainer — Battery | 1 |
| 25 | 49-8311 | Wire Harness Assembly | 1 |
| 26 | 46-8460 | Decal — Toro Key-Lectric | 1 |
| 27 | 32104-76 | Screw — Tapping | 4 |
| 28 | 17-9421 | Screw — Handle | 2 |
| 29 | 19-4050 | Knob — Handle Release | 2 |

† Service Replacement Parts

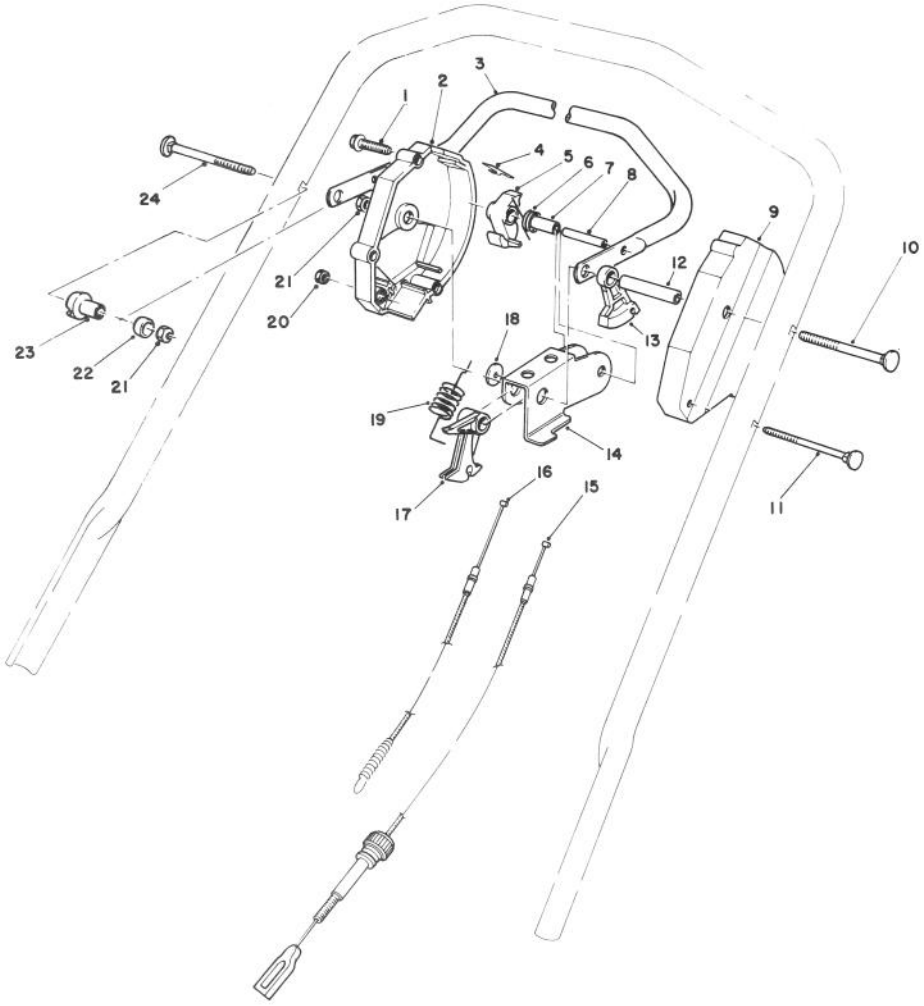


# TRACTION CONTROL ASSEMBLY

| Ref. No. | Part No. | Description | No. Used |
|---|---|---|---|
| 1 | 46-7040 | Screw — Thread Forming Hex Washer Hd. | 3 |
| 2 | 46-5450 | Housing — Control R.H. | 1 |
| 3 | 52-7430 | Control Bar Assembly | 1 |
| 4 | 52-7410 | Spring — Leaf | 1 |
| 5 | 46-5530 | Hook — Control | 1 |
| 6 | 46-5510 | Spring — Torsion | 1 |
| 7 | 46-5550 | Bushing — P.M. | 1 |
| 8 | 32121-9 | Pin — Coil | 1 |
| 9 | 46-5460 | Housing — Control L.H. | 1 |
| 10 | 17-9422 | Screw — Handle | 1 |
| 11 | 46-6431 | Screw — Handle | 1 |
| 12 | 46-5590 | Spacer | 1 |

| Ref. No. | Part No. | Description | No. Used |
|---|---|---|---|
| 13 | 46-5520 | Lever — Traction | 1 |
| 14 | 46-5490 | Rocker | 1 |
| 15 | 46-5480 | Cable — Traction | 1 |
| 16 | 46-5470 | Cable — Clutch | 1 |
| 17 | 46-5540 | Lever — Cable | 1 |
| 18 | 46-5600 | Washer — Nylon | 1 |
| 19 | 49-8020 | Spring — Extension | 1 |
| 20 | 3296-42 | Locknut | 1 |
| 21 | 3296-58 | Locknut | 2 |
| 22 | 256-276 | Spacer | 1 |
| 23 | 49-1630 | Support — Spacer | 1 |
| 24 | 17-9421 | Screw — Handle | 1 |

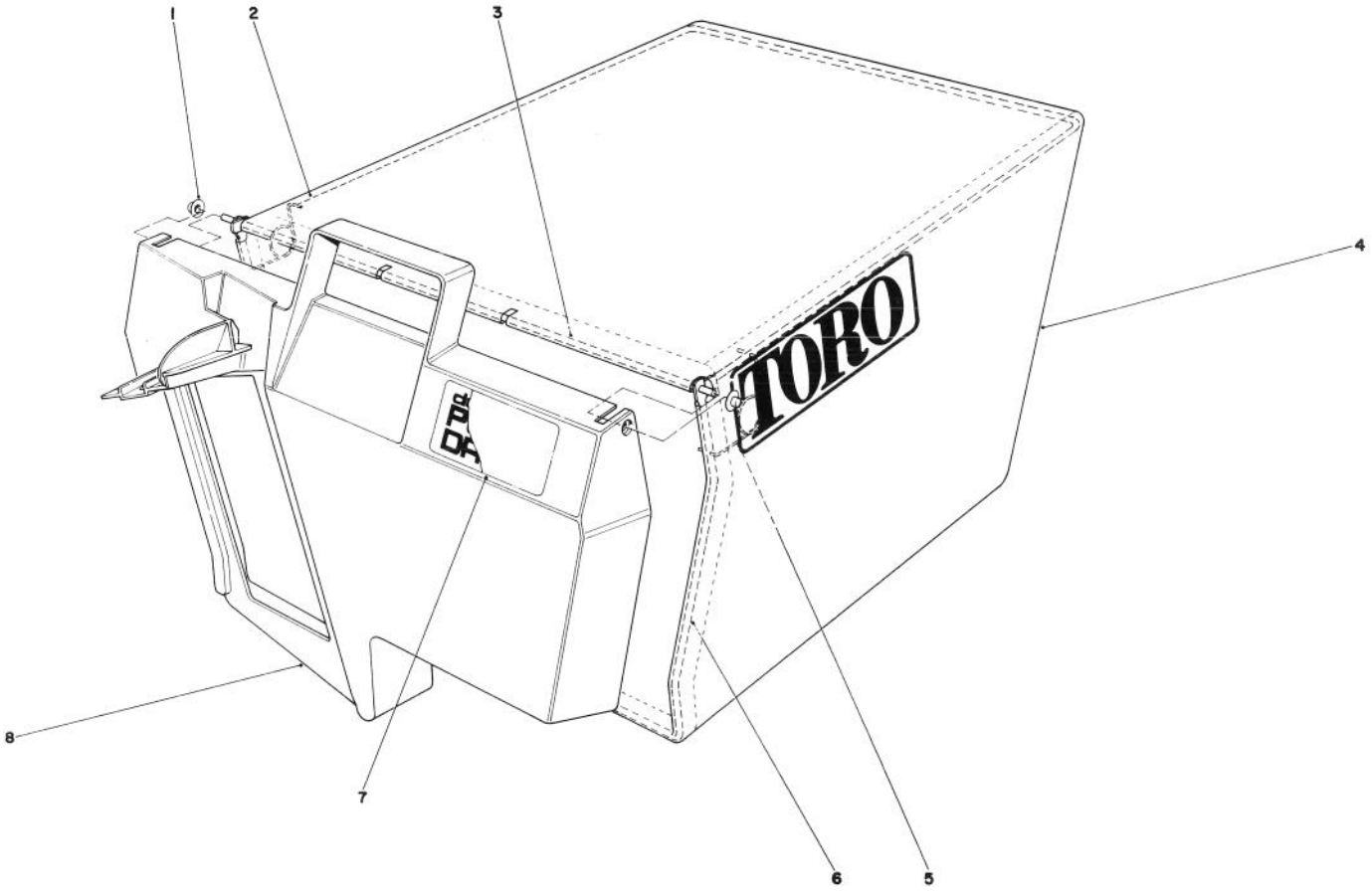


# GRASS BAG ASSEMBLY NO. 11-0189

| Ref. No. | Part No. | Description | No. Used |
|---|---|---|---|
| 1 | 3290-422 | Push Nut | 2 |
| 2 | 42-4030 | Bag Frame Upper | 1 |
| 3 | 33-4820 | Hinge Bag Door | 1 |
| 4 | 8-2759 | Grass Bag | 1 |

| Ref. No. | Part No. | Description | No. Used |
|---|---|---|---|
| 5 | 36-6910 | Spring | 2 |
| 6 | 42-4020 | Frame Bag | 1 |
| 7 | 40-2240 | Decal — Bag Door | 1 |
| 8 | 37-1392 | Door Grass Bag | 1 |

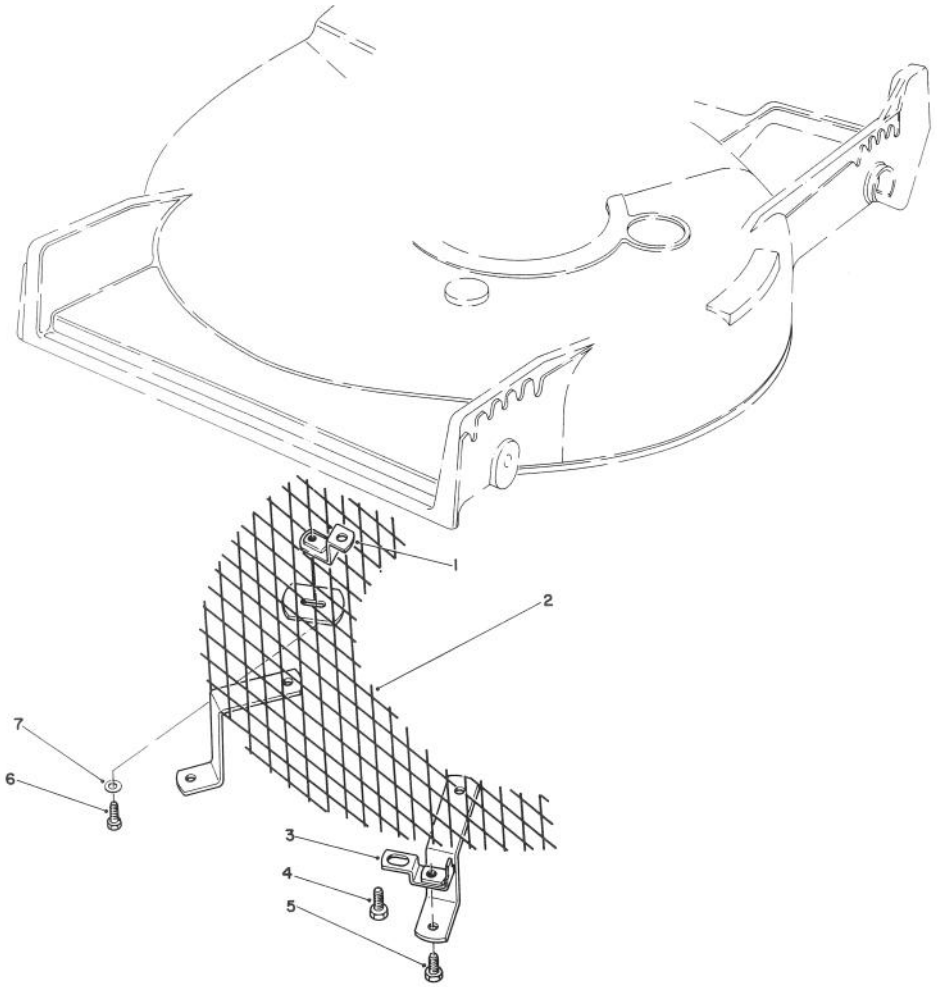


# LEAF SHREDDER KIT MODEL NO. 59157 (Optional)

| Ref. No. | Part No. | Description | No. Used |
|---|---|---|---|
| 1 | 47-6260 | Bracket | 1 |
| 2 | 47-6230 | Screen | 1 |
| 3 | 46-4880 | Mounting Bracket | 2 |
| 4 | 32144-11 | Screw — Self Tapping | 3 |

| Ref. No. | Part No. | Description | No. Used |
|---|---|---|---|
| 5 | 321-3 | Capscrew — Hex Hd. | 2 |
| 6 | 321-5 | Capscrew — Hex Hd. | 1 |
| 7 | 3256-1 | Washer | 1 |

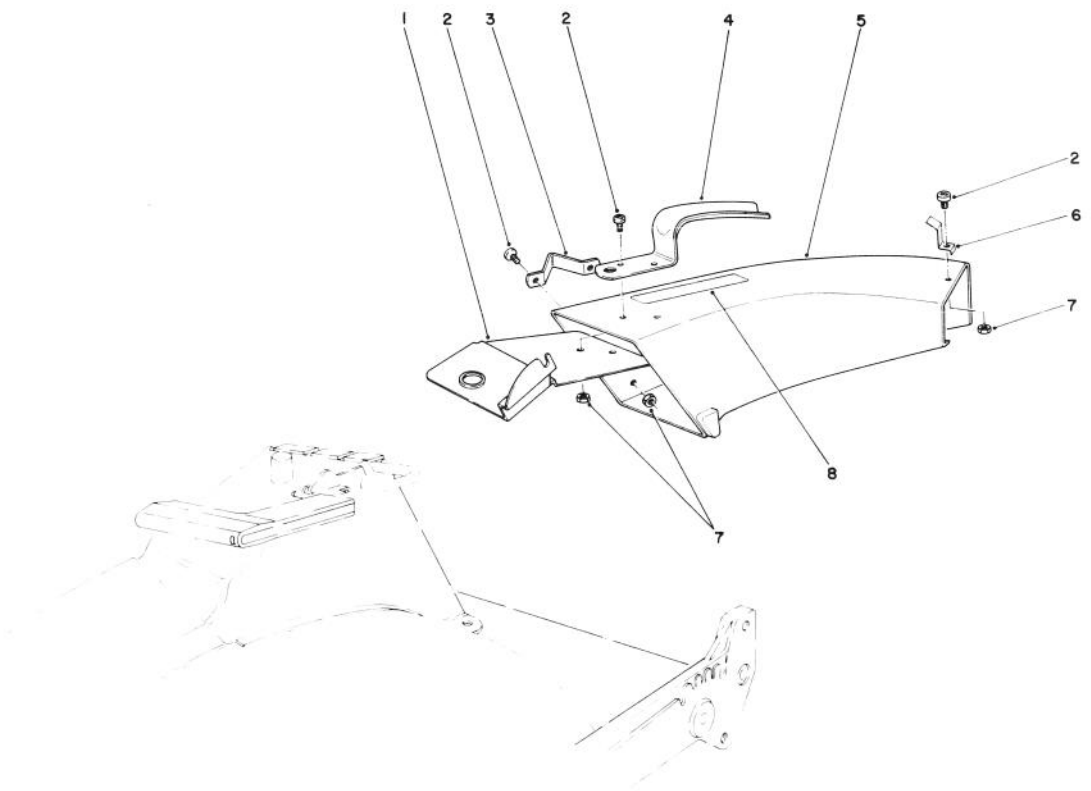


# SIDE DISCHARGE CHUTE MODEL NO. 59108 (Optional)

| Ref. No. | Part No. | Description | No. Used |
|---|---|---|---|
| 1 | 44-2330 | Plate — Discharge Chute | 1 |
| 2 | 3251-3 | Screw | 5 |
| 3 | 46-6580 | Bracket — Side | 1 |
| 4 | 42-1340 | Handle — Grass Chute | 1 |
| 5 | 11-7149 | Chute — Discharge (Incl. Ref. #8) | 1 |

| Ref. No. | Part No. | Description | No. Used |
|---|---|---|---|
| 6 | 49-2630 | Clip — Cable Stop | 1 |
| 7 | 3296-12 | Locknut | 5 |
| 8 | 39-9120 | Decal — Caution | 1 |

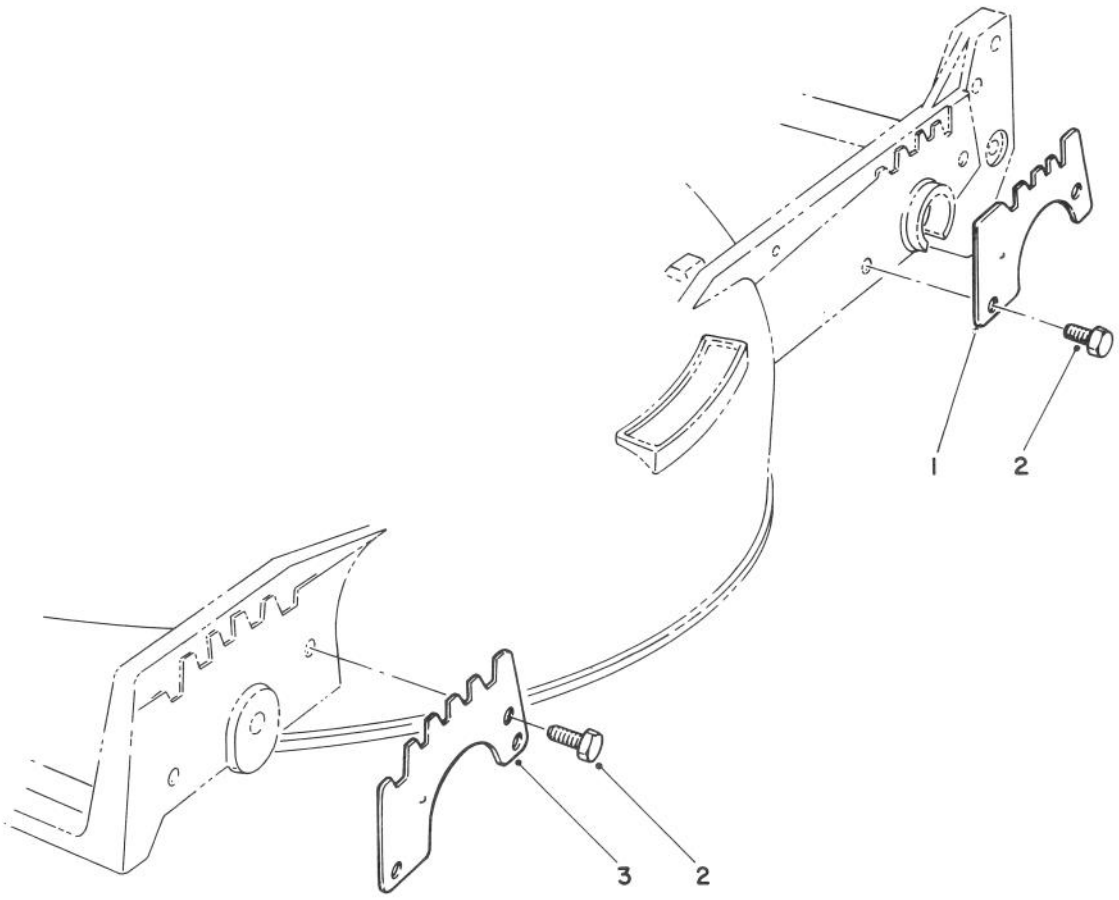


# WEAR PLATE KIT NO. 49-4080 (Optional)

| Ref. No. | Part No. | Description | No. Used |
|---|---|---|---|
| 1 | 49-4070 | Plate — Wear, Rear | 2 |
| 2 | 32104-17 | Screw — Thread Forming | 8 |

| Ref. No. | Part No. | Description | No. Used |
|---|---|---|---|
| 3 | 43-5050 | Plate — Wear, Front | 2 |

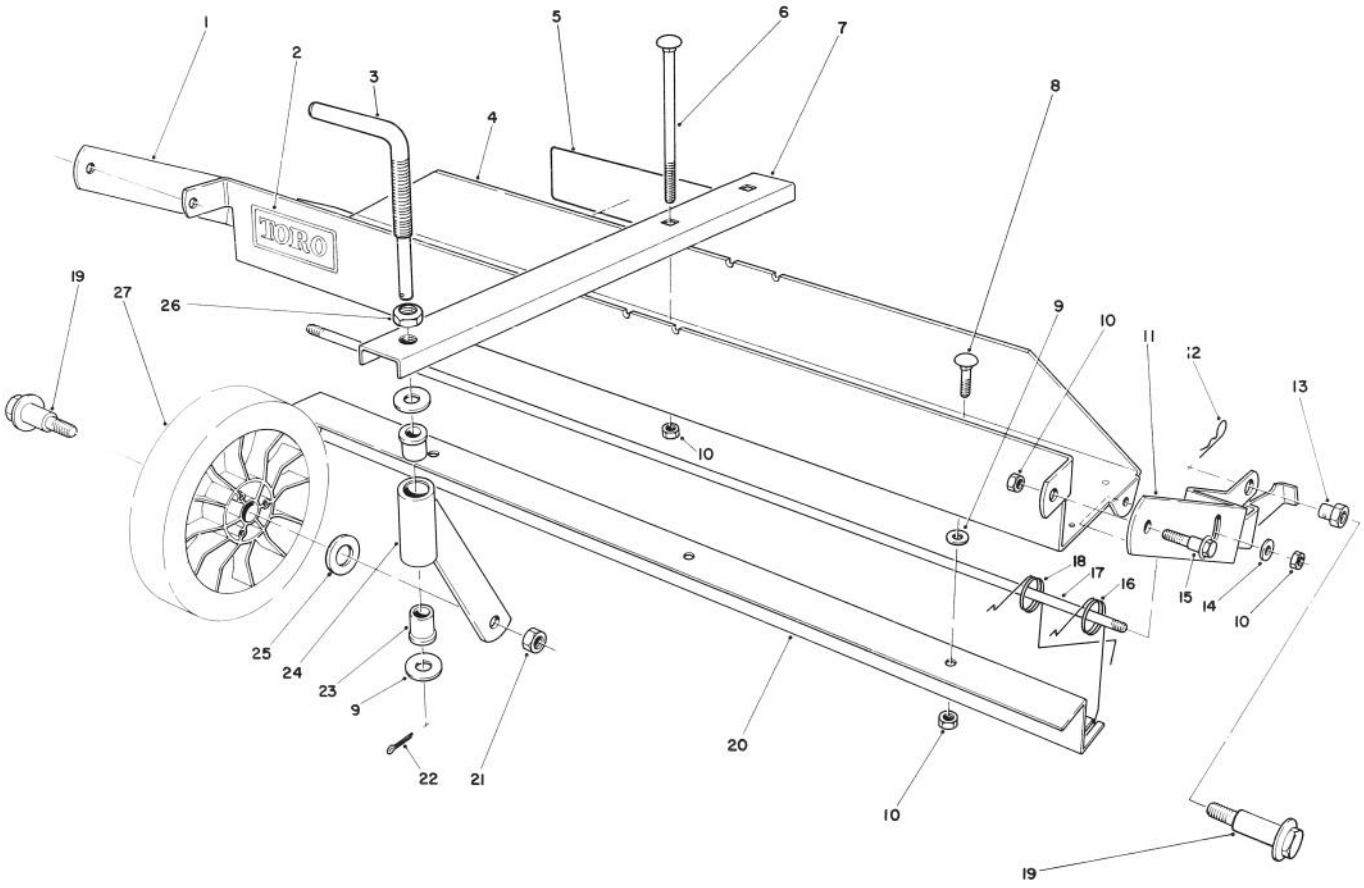


# DETHATCHER KIT MODEL NO. 59126 (Optional)

| Ref. No. | Part No. | Description | No. Used |
|---|---|---|---|
| 1 | 47-6030 | Frame Mount — R.H. | 1 |
| 2 | 44-0810 | Decal — Toro | 1 |
| 3 | 47-6120 | Rod — Castor Adjust | 1 |
| 4 | 47-2390 | Frame — Main (Incl. Ref. #2) | 1 |
| 5 | 47-7500 | Decal — Instruction | 1 |
| 6 | 3230-13 | Carriage Bolt | 2 |
| 7 | 47-6090 | Castor Frame | 1 |
| 8 | 3230-1 | Carriage Bolt | 3 |
| 9 | 3256-23 | Washer | 5 |
| 10 | 32153-3 | Locknut | 9 |
| 11 | 47-6020 | Frame Mount — L.H. | 1 |
| 12 | 3290-255 | Hairpin Cotter | 2 |
| 13 | 47-6130 | Pivot Nut | 2 |
| 14 | 3256-24 | Washer — Plain | 2 |

| Ref. No. | Part No. | Description | No. Used |
|---|---|---|---|
| 15 | 37-8771 | Screw — Shoulder | 2 |
| 16 | 47-6040 | Spring — Dethatcher | 6 |
| 17 | 47-6050 | Rod — Spring Support | 1 |
| 18 | 47-6041 | Spring — Dethatcher | 6 |
| 19 | 27-6230 | Wheel Bolt | 3 |
| 20 | 47-6010 | Strap — Spring Guide | 1 |
| 21 | 3296-6 | Locknut | 1 |
| 22 | 3272-10 | Cotter Pin | 1 |
| 23 | 47-6110 | Bushing — Flange | 2 |
| 24 | 47-6060 | Castor Tube & Support | 1 |
| 25 | 40-1940 | Washer — Wheel | 1 |
| 26 | 3220-5 | Nut — Jam | 1 |
| 27 | 34-0380 | Wheel Assembly | 1 |
| * | 11-5239 | Loose Parts | 1 |

* Not Illustrated

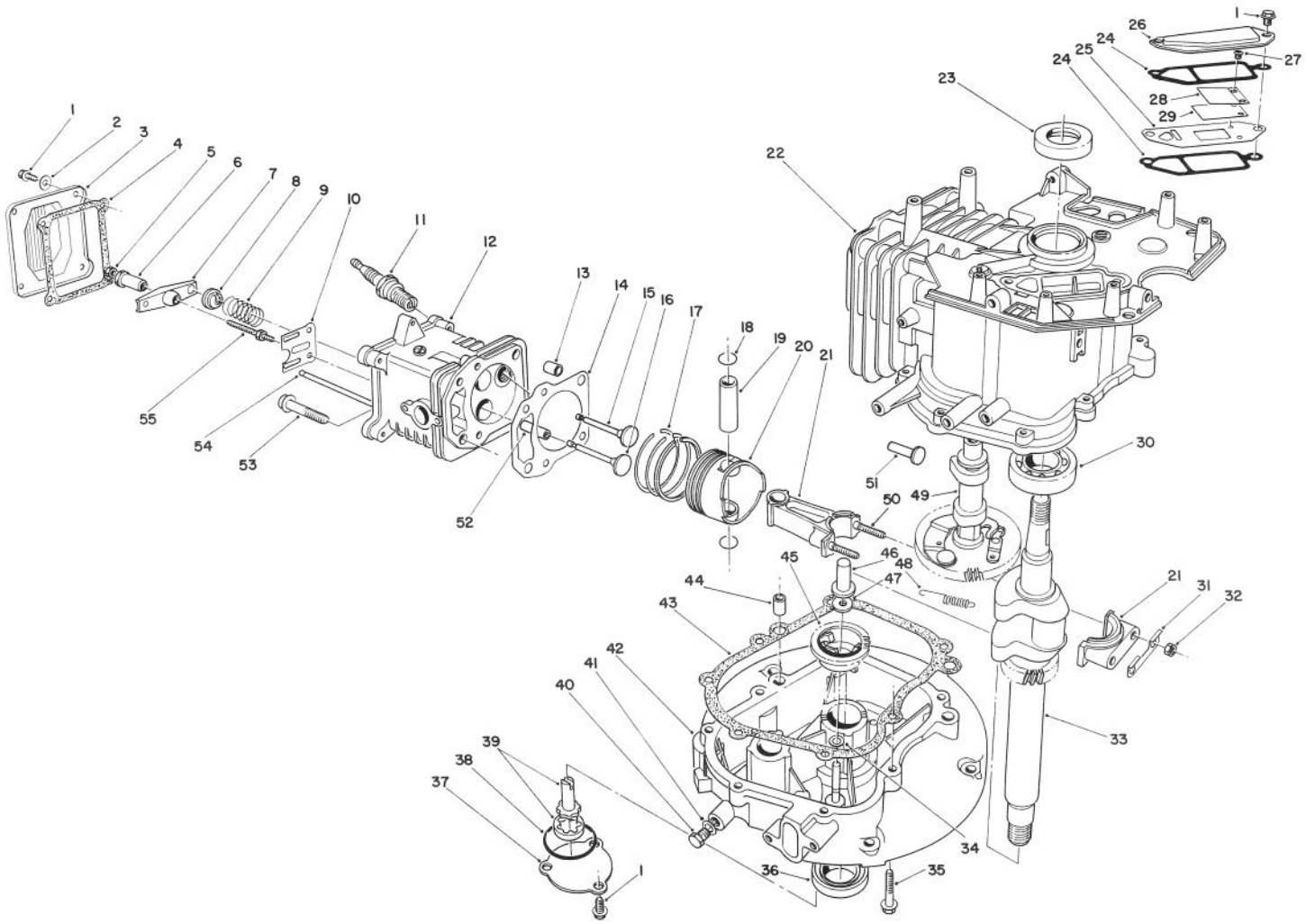

# ENGINE ASSEMBLY

| Ref. No. | Part No. | Description | No. Used |
|---|---|---|---|
| 1 | 81-1170 | Bolt | 9 |
| 2 | 81-3790 | Washer | 4 |
| 3 | 81-3780 | Cover — Rocker Arm | 1 |
| 4 | 81-3770 | Gasket — Cover | 1 |
| 5 | 81-3760 | Jam Nut | 2 |
| 6 | 81-3750 | Pivot — Rocker Arm | 2 |
| 7 | 81-3740 | Arm — Rocker | 2 |
| 8 | 81-3730 | Retainer — Valve Spring | 2 |
| 9 | 81-3720 | Spring — Valve | 2 |
| 10 | 81-3710 | Guide — Push Rod | 1 |
| 11 | 81-3250 | Spark Plug NGKBPR6ES | 1 |
| 12 | 81-3700 | Head — Cylinder (Incl. Ref. #52) | 1 |
| * | 81-3840 | Cylinder Head Assembly (Incl. Ref. #1-10, 12, & 52-55) | 1 |
| 13 | 81-3690 | Pin — Dowel | 2 |
| 14 | 81-3680 | Gasket — Cylinder Head | 1 |
| * | 81-3820 | Gasket Set | A/R |
| 15 | 81-3670 | Valve — Intake | 1 |
| 16 | 81-3660 | Valve — Exhaust | 1 |
| 17 | 81-3650 | Ring Set | 1 |
| 18 | 50-0960 | Circlip | 2 |

| Ref. No. | Part No. | Description | No. Used |
|---|---|---|---|
| 19 | 81-3630 | Pin — Piston | 1 |
| 20 | 81-3620 | Piston | 1 |
| 21 | 81-3390 | Connecting Rod Assembly (Incl. Ref. #31, 32, & 50) | 1 |
| 22 | 81-3280 | Block — Engine (Incl. Ref. #23, & 30) | 1 |
| 23 | 81-3290 | Seal — Upper — Crankshaft | 1 |
| 24 | 81-3300 | Gasket — Breather | 2 |
| 25 | | Plate — Breather | 1 |
| 26 | 81-3320 | Cover — Breather | 1 |
| 27 | | Screw — Reed Valve | 2 |
| 28 | | Retainer — Reed Valve | 1 |
| 29 | | Valve — Reed | 1 |
| * | 81-3370 | Reed Valve Assembly (Incl. Ref. #25, & 27-29) | 1 |
| 30 | 81-3380 | Ball Bearing | 1 |
| 31 | 81-3400 | Plate — Lock | 1 |
| 32 | 50-0510 | Nut | 2 |
| 33 | 81-3430 | Crankshaft | 1 |
| 34 | 81-3440 | Washer | 1 |
| 35 | 81-3450 | Bolt | 7 |
| 36 | 81-3460 | Seal — Lower Crankshaft | 1 |

* Not Illustrated

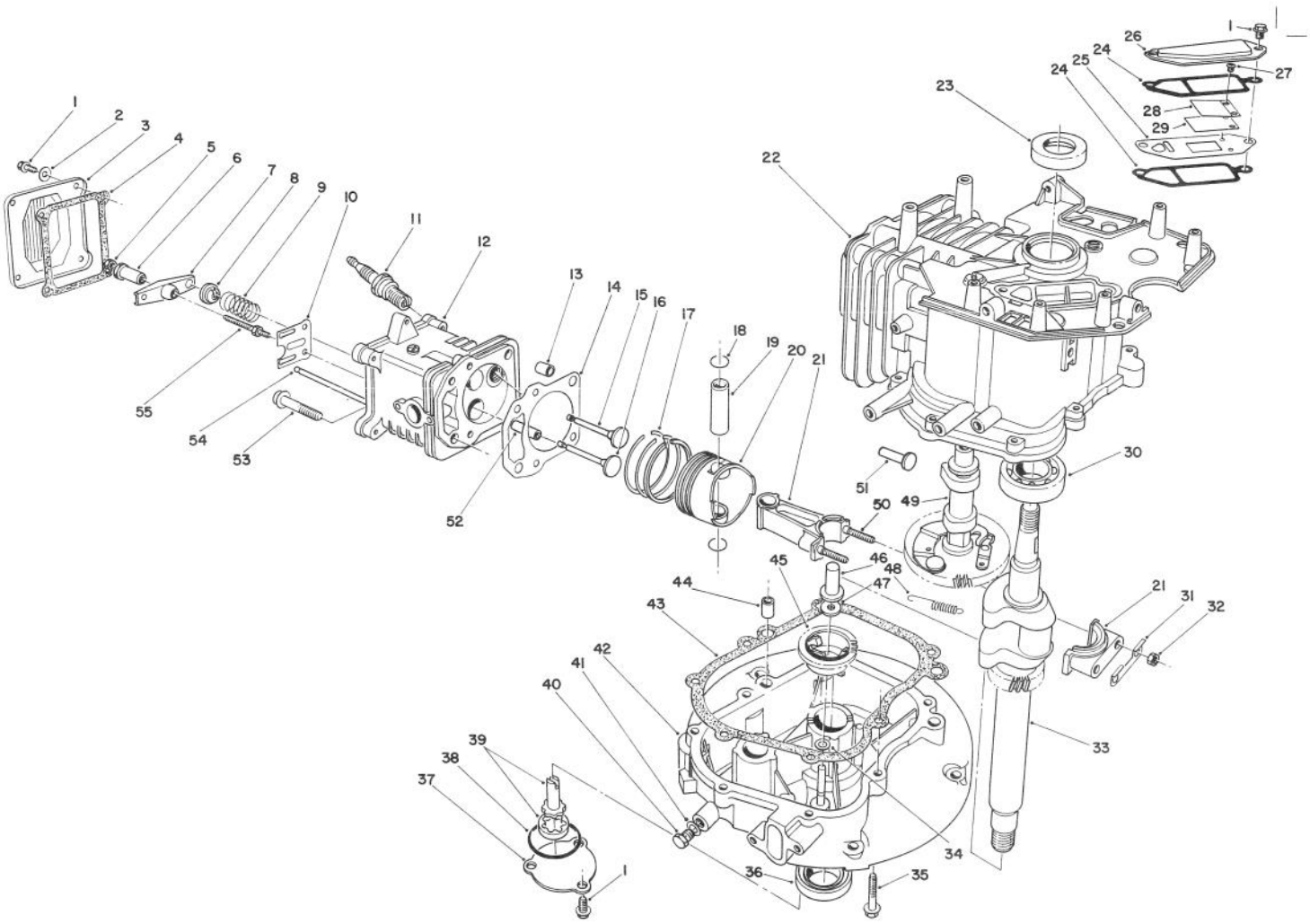

# ENGINE ASSEMBLY (Continued)

| Ref. No. | Part No. | Description | No. Used |
|---|---|---|---|
| 37 | 81-3470 | Cover — Oil Pump | 1 |
| 38 | 81-3480 | O-Ring | 1 |
| 39 | 81-3490 | Oil Pump Assembly | 1 |
| 40 | 81-3500 | Plug — Oil Drain | 1 |
| 41 | 81-3510 | Gasket — Oil Plug | 1 |
| 42 | 81-3520 | Crankcase — Lower | 1 |
| 43 | 81-3530 | Gasket — Crankcase | 1 |
| 44 | 50-0450 | Pin — Dowel | 2 |
| 45 | 81-3550 | Governor Flyweight Assembly | 1 |
| 46 | 81-3560 | Plunger — Governor | 1 |
| 47 | 81-3570 | Washer | 1 |

| Ref. No. | Part No. | Description | No. Used |
|---|---|---|---|
| 48 | 81-3580 | Spring — Compression Release | 1 |
| 49 | 81-3590 | Camshaft Assembly (Incl. Ref. #48) | 1 |
| 50 | 81-3610 | Stud — Connecting Rod | 2 |
| 51 | 81-3600 | Tappet | 2 |
| 52 | 81-3830 | Guide — Valve | 2 |
| 53 | 50-0190 | Bolt | 4 |
| 54 | 81-3810 | Rod — Push | 2 |
| 55 | 81-3800 | Stud — Rocker Arm | 2 |
| * | 12-2619 | Short Block Assembly | 1 |

* Not Illustrated

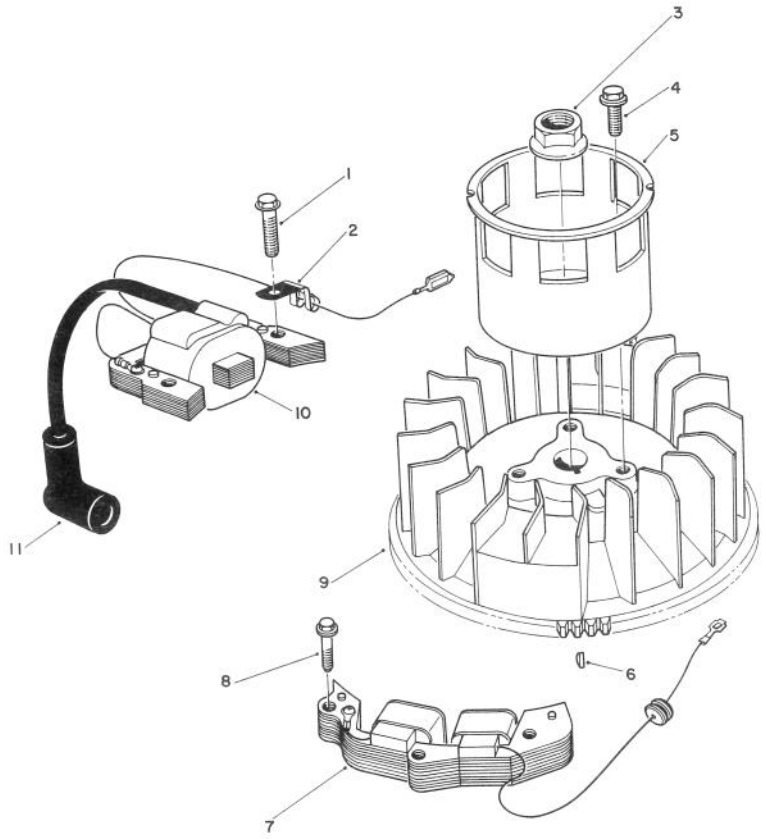


# MAGNETO & FLYWHEEL ASSEMBLY

| Ref. No. | Part No. | Description | No. Used |
|---|---|---|---|
| 1 | 53-0860 | Bolt | 2 |
| 2 | 81-1480 | Clamp | 1 |
| 3 | 81-3890 | Nut | 1 |
| 4 | 81-1300 | Bolt | 3 |
| 5 | 81-3910 | Cup — Starter | 1 |
| 6 | 81-3930 | Key — Flywheel | 1 |

| Ref. No. | Part No. | Description | No. Used |
|---|---|---|---|
| 7 | 81-3940 | Coil — Alternator | 1 |
| 8 | 81-3950 | Bolt | 2 |
| 9 | 81-3920 | Flywheel | 1 |
| 10 | 81-3850 | Coil Assembly — Magneto | 1 |
| 11 | 81-3860 | Cover — Spark Plug | 1 |

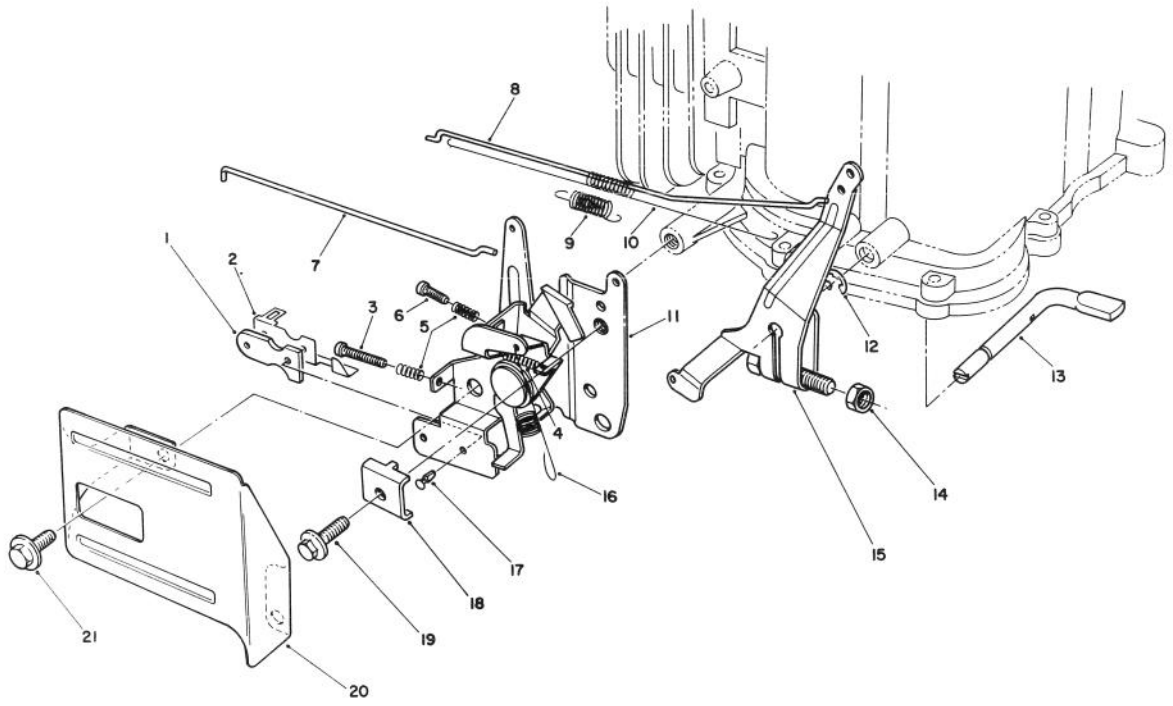


# GOVERNOR ASSEMBLY

| Ref. No. | Part No. | Description | No. Used |
|---|---|---|---|
| 1 | 81-1830 | Insulator — Kill Switch | 1 |
| 2 | 81-1840 | Terminal — Switch | 1 |
| 3 | 81-4560 | Screw | 1 |
| 4 | 81-4570 | Spring | 1 |
| 5 | 81-2900 | Spring | 2 |
| 6 | 81-4550 | Screw | 1 |
| 7 | 81-4440 | Rod — Choke | 1 |
| 8 | 81-4450 | Rod — Carburetor | 1 |
| 9 | 81-4460 | Spring — Choke Lever | 1 |
| 10 | 81-4470 | Spring — Carburetor Rod | 1 |
| 11 | 81-4510 | Throttle & Choke Control | 1 |

| Ref. No. | Part No. | Description | No. Used |
|---|---|---|---|
| 12 | 81-4540 | E-Ring | 1 |
| 13 | 81-4480 | Shaft — Governor | 1 |
| 14 | 81-3760 | Nut | 1 |
| 15 | 81-4500 | Governor Arm Assembly | 1 |
| 16 | 81-4520 | Spring — Governor | 1 |
| 17 | 81-4530 | Rivet | 2 |
| 18 | 81-1690 | Clamp — Cable | 1 |
| 19 | 50-0130 | Bolt | 1 |
| 20 | 57-5750 | Guard — Throttle | 1 |
| 21 | 81-1170 | Bolt | 2 |

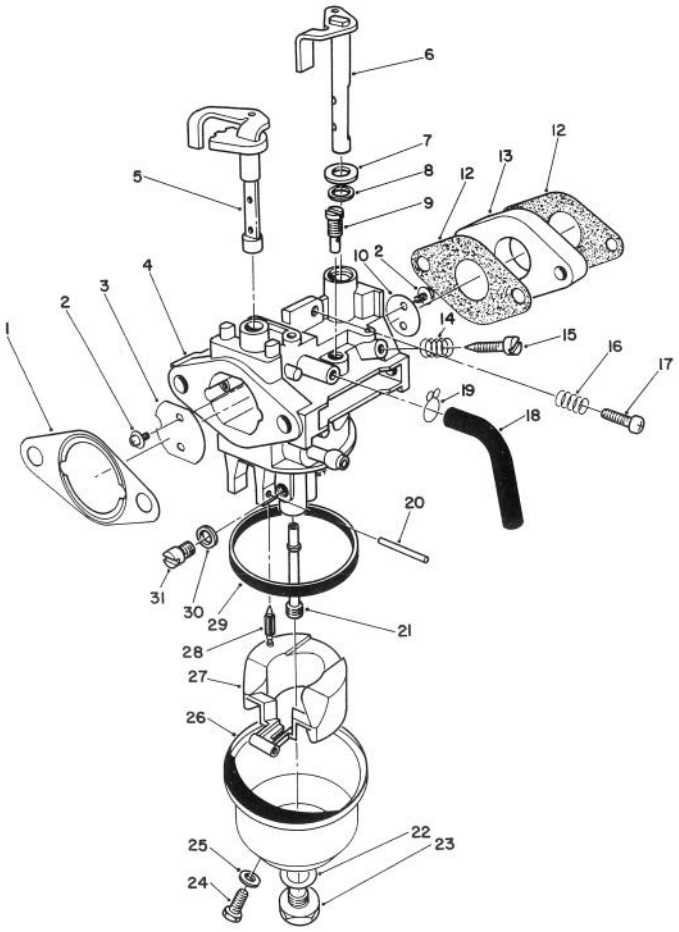


# CARBURETOR ASSEMBLY

| Ref. No. | Part No. | Description | No. Used |
|---|---|---|---|
| 1 | 81-4250 | Gasket — Air Cleaner | 1 |
| 2 | 81-2710 | Screw — Choke Valve | 4 |
| 3 | 81-2720 | Valve — Choke | 1 |
| 4 | | Body — Carburetor | 1 |
| 5 | 81-4270 | Shaft — Choke Valve | 1 |
| 6 | 81-2920 | Shaft — Throttle Valve | 1 |
| 7 | 81-4280 | Washer | 1 |
| 8 | 81-4290 | Seal — Throttle Shaft | 1 |
| 9 | 81-1030 | Jet — Pilot (#40) | 1 |
| 10 | 81-2940 | Valve — Throttle | 1 |
| 12 | 81-2570 | Gasket — Carburetor | 2 |
| 13 | 81-0460 | Block — Insulator | 1 |
| 14 | 81-2580 | Spring — Pilot Screw | 1 |
| 15 | 50-2360 | Screw — Pilot | 1 |
| 16 | 81-2580 | Spring — Idle Stop | 1 |
| 17 | 50-0250 | Screw — Idle Stop | 1 |
| 18 | 81-4310 | Tube — Bowl Vent | 1 |
| 19 | 81-4300 | Clamp | 1 |

| Ref. No. | Part No. | Description | No. Used |
|---|---|---|---|
| 20 | 81-0980 | Pin — Hinge | 1 |
| 21 | 81-4330 | Nozzle — Main | 1 |
| 22 | 81-2650 | Gasket — Bowl Screw | 1 |
| 23 | 81-2660 | Screw — Bowl | 1 |
| 24 | 81-2670 | Screw — Drain | 1 |
| 25 | 81-2680 | Gasket — Drain Screw | 1 |
| 26 | 81-4340 | Bowl — Float | 1 |
| 27 | 81-2620 | Float | 1 |
| 28 | 81-2690 | Needle | 1 |
| 29 | 81-2630 | Gasket — Float Bowl | 1 |
| 30 | 81-4350 | Spacer | 1 |
| 31 | 50-4760 | Main Jet (#82.5) | 1 |
| * | 81-1040 | Main Jet (#80 High Alt.) | A/R |
| * | 81-4360 | Carburetor Kit (Incl. Ref. #1, 12, 22, 25, 28, & 29) | A/R |
| * | 81-4370 | Carburetor Assembly (Incl. Ref. #2-31) | 1 |

* Not Illustrated

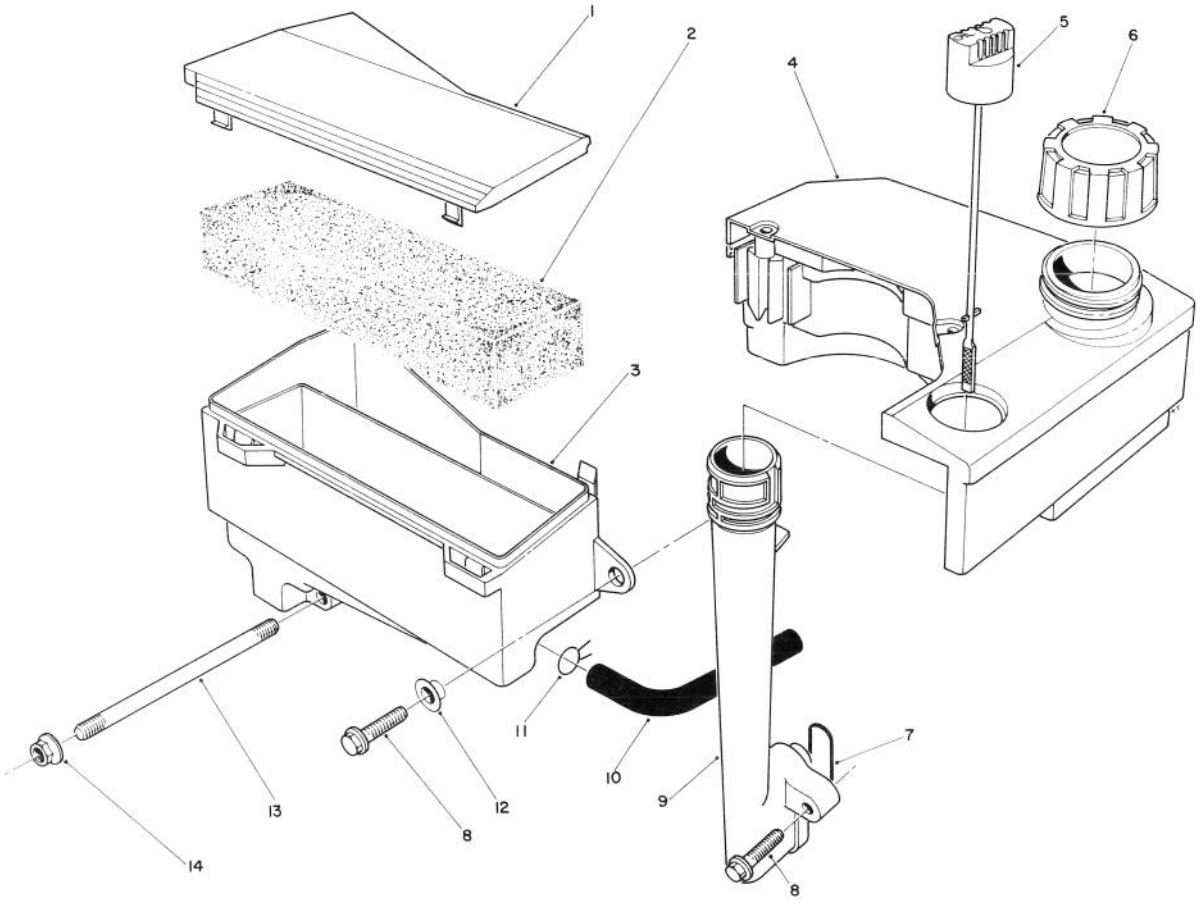


# AIR CLEANER & FUEL TANK ASSEMBLY

| Ref. No. | Part No. | Description | No. Used |
|---|---|---|---|
| 1 | 81-4110 | Cover — Air Cleaner | 1 |
| 2 | 81-4120 | Filter — Foam | 1 |
| 3 | | Body — Air Cleaner | 1 |
| 4 | 55-3530 | Fuel Tank | 1 |
| 5 | 81-4140 | Dipstick — Oil | 1 |
| 6 | 55-3570 | Gas Cap | 1 |
| 7 | 81-4150 | O-Ring — Oil Tube | 1 |
| 8 | 81-4160 | Bolt | 3 |
| 9 | 81-4170 | Tube — Oil Fill | 1 |

| Ref. No. | Part No. | Description | No. Used |
|---|---|---|---|
| 10 | 81-4180 | Hose — Crankcase Breather | 1 |
| 11 | 81-4190 | Clamp | 1 |
| 12 | 81-4200 | Spacer | 1 |
| 13 | 81-4220 | Stud — Carburetor | 2 |
| 14 | 50-7180 | Nut | 2 |
| * | 81-4240 | Air Cleaner Assembly (Incl. Ref. #1 & 3) | 1 |
| * | 12-3369 | Air Cleaner Assembly (Incl. Ref. #1-3, & 10 & 11) | 1 |

* Not Illustrated

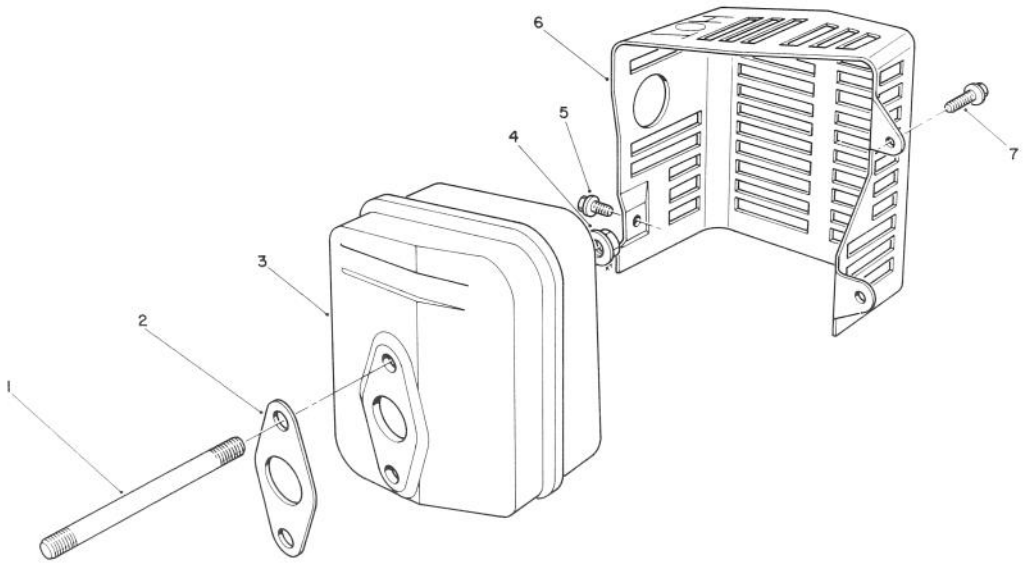


# MUFFLER ASSEMBLY

| Ref. No. | Part No. | Description | No. Used |
|---|---|---|---|
| 1 | 81-4380 | Stud — Muffler | 2 |
| 2 | 81-4390 | Gasket — Muffler | 1 |
| 3 | 81-4400 | Muffler | 1 |
| 4 | 50-0530 | Nut | 2 |

| Ref. No. | Part No. | Description | No. Used |
|---|---|---|---|
| 5 | 81-4420 | Screw | 1 |
| 6 | 81-4430 | Cover — Muffler | 1 |
| 7 | 81-1170 | Bolt | 2 |

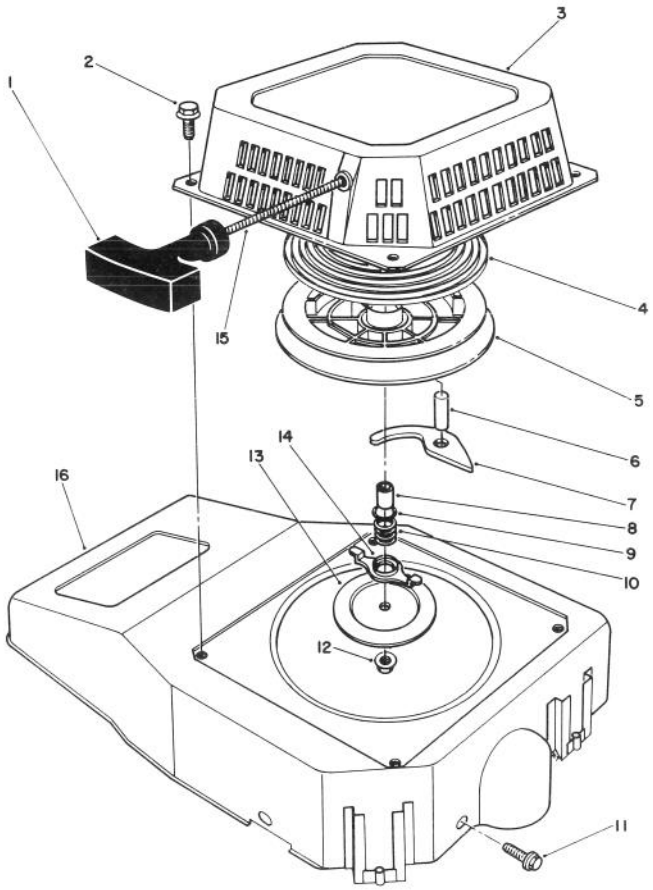


# RECOIL ASSEMBLY

| Ref. No. | Part No. | Description | No. Used |
|---|---|---|---|
| 1 | 81-4000 | Handle | 1 |
| 2 | 81-1280 | Bolt | 4 |
| 3 | 81-3970 | Case — Recoil | 1 |
| 4 | 81-4010 | Spring — Recoil | 1 |
| 5 | 81-4020 | Reel — Rope Pulley | 1 |
| 6 | 81-4030 | Pin | 1 |
| 7 | 81-4040 | Pawl | 1 |
| 8 | 81-4050 | Spacer | 1 |
| 9 | 81-4060 | Washer | 1 |

| Ref. No. | Part No. | Description | No. Used |
|---|---|---|---|
| 10 | 81-4070 | Spring — Friction | 1 |
| 11 | 81-1170 | Bolt | 3 |
| 12 | 81-4100 | Locknut | 1 |
| 13 | 81-4090 | Plate — Friction | 1 |
| 14 | 81-4080 | Guide — Pawl | 1 |
| 15 | 81-1270 | Rope — Recoil | 1 |
| 16 | 81-3960 | Shroud — Blower | 1 |
| * | 81-3270 | Recoil Starter Assembly (Incl. Ref. #1, & 3-15) | 1 |

* Not Illustrated

# PRODUCT CHANGES

In an effort to make improvements available to TORO owners as quickly as possible, minor changes are incorporated into Toro's products from time to time that do not become immediately shown in the Parts Catalog. If such a change apparently has been made in your unit, which is not reflected in your manual, see your TORO Distributor or his Authorized TORO Service Dealer for information and part numbers.

# IDENTIFICATION AND ORDERING

### MODEL AND SERIAL NUMBERS

The Mower has two identification numbers: a model number and a serial number. The two numbers are stamped on a decal which is located on the mower housing between the rear wheels. In any correspondence concerning the mower, supply model and serial numbers to assure that correct information and replacement parts are obtained.

To order replacement parts from an Authorized TORO Service Dealer, supply the following information:

1. Model and serial numbers of the mower.
2. Part number, description, and quantity of part(s) desired.

**Note:** Do not order by reference number if a parts catalog is being used; use the PART NUMBER.

# The Toro Promise

***A Two Year Limited Warranty***

*On All*

*Gasoline Powered Consumer Products*

*The Toro Company promises to repair your TORO Product if defective in materials or workmanship. The following time periods from the date of purchase apply:*

Residential Product ..... 2 Years
Residential Products Used Commercially ..... 45 Days

*The costs of parts and labor are included, but the customer pays the transportation costs. Just return any residential product to an Authorized TORO Service Dealer or TORO Distributor.*

Should you feel your TORO Product is defective and wish to rely on The Toro Promise, the following procedure is recommended:

1. Contact any Authorized TORO Service Dealer, TORO Master Service Dealer, or TORO Distributor (the Yellow Pages of your telephone directory is a good reference source).
2. He will either instruct you to return the product to him or recommend another Authorized TORO Service outlet which might be more convenient.
3. Bring the product along with your original sales slip, or other evidence of purchase date, to the service dealer.
4. The servicing dealer will inspect the unit, advise you whether the product is defective and, if so, make all repairs necessary to correct the defect without extra charge to you.

If for any reason you are dissatisfied with the dealer's analysis of the defect or the service performed, you may contact us.

Write:

TORO Consumer Service Department
8111 Lyndale Avenue South
Minneapolis, Minnesota 55420

The above remedy of product defects through repair by an Authorized TORO Service Dealer is the purchaser's sole remedy for any defect.

THERE IS NO OTHER EXPRESS WARRANTY. ALL IMPLIED WARRANTIES OF MERCHANTABILITY AND FITNESS FOR USE ARE LIMITED TO THE DURATION OF THE EXPRESS WARRANTY.

Some states do not allow limitations on how long an implied warranty lasts, so the above limitation may not apply to you.

This warranty applies only to parts or components which are defective and does not cover repairs necessary due to normal wear, misuse, accidents, or lack of proper maintenance. Regular, routine maintenance of the unit to keep it in proper operating condition is the responsibility of the owner.

All warranty repairs reimbursable under The Toro Promise must be performed by an Authorized TORO Service Dealer using Toro approved replacement parts.

Repairs or attempted repairs by anyone other than an Authorized TORO Service Account are not reimbursable under The Toro Promise. In addition, these unauthorized repair attempts may result in additional malfunctions, the correction of which is not covered by warranty.

THE TORO COMPANY IS NOT LIABLE FOR INDIRECT, INCIDENTAL OR CONSEQUENTIAL DAMAGES IN CONNECTION WITH THE USE OF THE PRODUCT INCLUDING ANY COST OR EXPENSE OF PROVIDING SUBSTITUTE EQUIPMENT OR SERVICE DURING PERIODS OF MALFUNCTION OR NON-USE.

Some states do not allow the exclusion or limitation of incidental or consequential damages, so the above limitation or exclusion may not apply to you.

This warranty gives you specific legal rights, and you may also have other rights which vary from state to state.

## COUNTRIES OTHER THAN THE UNITED STATES OR CANADA

Customers who have purchased TORO products exported from the United States or Canada should contact their TORO Distributor (Dealer) to obtain guarantee policies for your country, province or state. If for any reason you are dissatisfied with your Distributor's service or have difficulty obtaining guarantee information, contact the TORO importer. If all other remedies fail, you may contact us at The Toro Company.

Compliance with Radio Interference Regulations Certified.
Certifie Conforme au Reglement sur le Brouillage Radioelectrique.

# MAINTENANCE RECORD

| Date | Hours Used | Oil Change | Air Cleaner Service | Lubrication | Winter Storage | Spring Service | Spark Plug Gap |
|---|---|---|---|---|---|---|---|
| | | | | | | | |
| | | | | | | | |
| | | | | | | | |
| | | | | | | | |
| | | | | | | | |
| | | | | | | | |
| | | | | | | | |
| | | | | | | | |
| | | | | | | | |
| | | | | | | | |
| | | | | | | | |
| | | | | | | | |
| | | | | | | | |
| | | | | | | | |
| | | | | | | | |
| | | | | | | | |
| | | | | | | | |
| | | | | | | | |
| | | | | | | | |
| | | | | | | | |
| | | | | | | | |
| | | | | | | | |
| | | | | | | | |
| | | | | | | | |
| | | | | | | | |
| | | | | | | | |
| | | | | | | | |
| | | | | | | | |
| | | | | | | | |