Form No. 3481-505 Rev B

TORO®

Count on it.

Parts Catalog

Power Max® Heavy Duty 824 Snowthrower

Model No. 39960—Serial No. 400000000 and Up

Register at www.Toro.com.
Original Instructions (EN)

3481-505 B

Ordering Replacement Parts

To order replacement parts, please supply the part number, the quantity, and the description of each part desired.

Understanding Reference Numbers

Each identified part in an illustration has a reference number. The reference number for a part also appears in the parts list, along with other information about the part.

This catalog uses two special reference number formats, one to indicate parts in a service assembly and another to indicate the quantity of a given part in an illustration.

Service Assembly Reference Numbers

Parts in service assemblies have reference numbers in the form a:b. The a represents the reference number of the entire service assembly and the b represents a sequential number unique to each part within the service assembly.

For example, a wheel assembly might be identified by reference number 6, the tire by 6:1, the valve by 6:2, and the wheel by 6:3. When you order the assembly identified by reference number 6, you receive all parts identified by reference numbers 6:1,6:2, and 6:3. However, you may also order any part individually. Reference numbers of this type appear in illustration and in parts lists.

Reference Numbers Indicating Quantity

In an illustration, if a reference number indicates more than one part, the reference number has the form nX y. The n represents the quantity of the part, the X is the multiplication symbol, and the y represents the reference number.

For example, in an illustration, the reference number 2X 37 means that two of the parts identified by reference number 37 are indicated.

Contents

Main Frame Assembly 4
Auger Drive Assembly 6
Gearbox Assembly 8
Auger Gearcase Assembly No. 136-6615 10
Engine Assembly 12
Chute Assembly 14
Quickstick Assembly 16
Handle and Control Assembly 18
Drive Assembly 20
Decal Assembly 22
Fuel System and Carburetor Assembly 24
Intake and Exhaust Assembly 26
Ignition and Electrical Assembly 28
Crankcase Assembly 30
Governor Assembly 32
Piston and Head Assembly 34
Blower Housing and Shrouds Assembly 36
Attachments and Accessories 38

© 2026—The Toro® Company
8111 Lyndale Avenue South
Bloomington, MN 55420

Contact us at www.Toro.com.
Printed in the USA.
All Rights Reserved

Main Frame Assembly

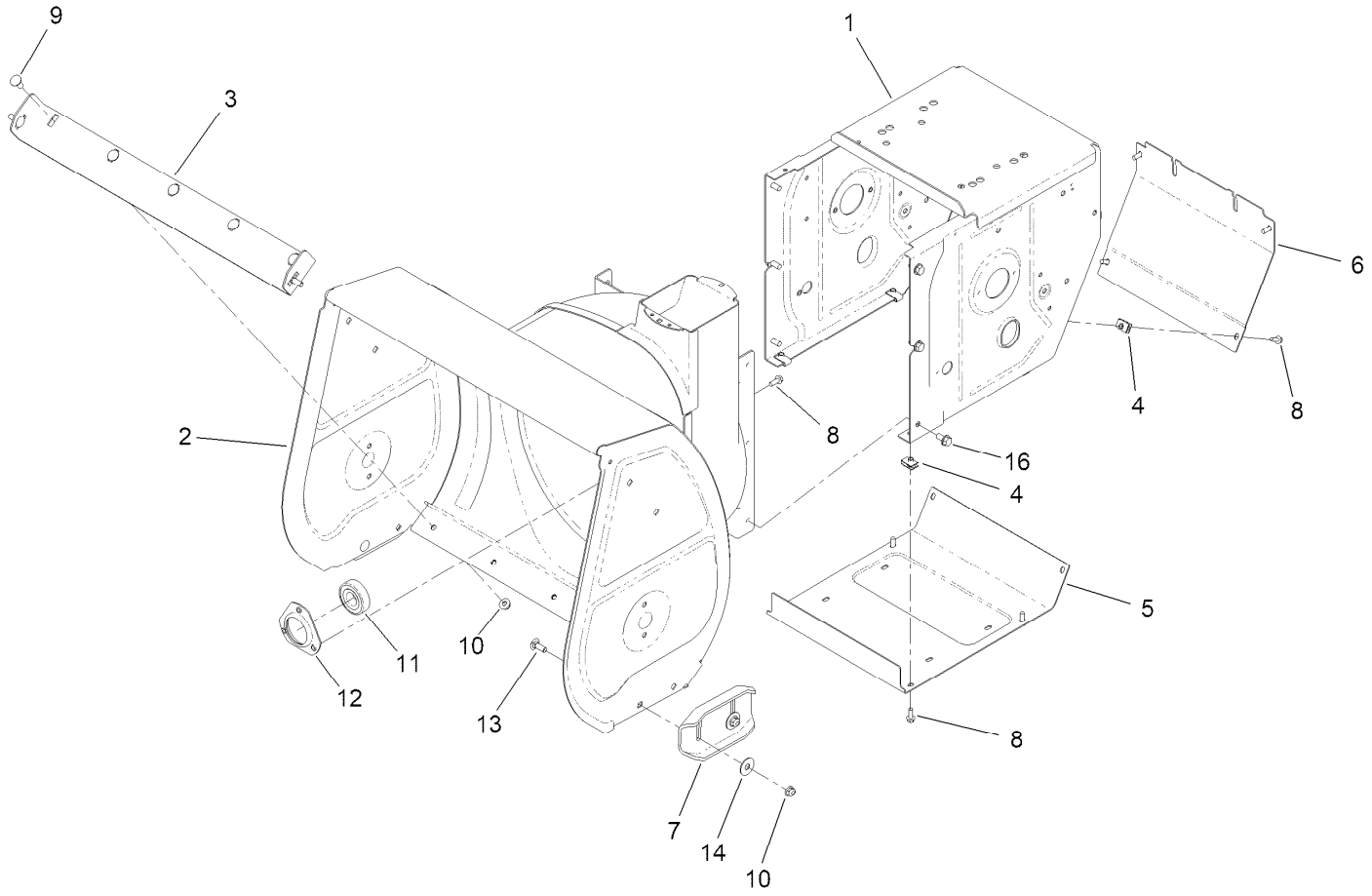

Main Frame Assembly (continued)

Ref.	Part Number	Qty.	Description
1	136-6639-01	1	Frame-Traction
2	164-5443	1	Auger Housing ASM (W/Decal 24")
3	136-6608-01	1	Blade-Scraper, 24"
4	107069	8	Clip
5	163-6262-01	1	Cover-Bottom
6	136-6651-01	1	Cover-Rear
7	106-4588-01	2	Skid
8	32144-85	11	Screw-HWH Thd Form
9	137-3061	5	Bolt-CARR
10	119-4041	9	Nut-HF
11	136-6571	1	Bearing-Ball
12	136-6573	1	Retainer-Bearing
13	137-3059	4	Bolt-CARR
14	119-4150	4	Washer-Flat
16	32144-14	6	Screw-HWHTF

Auger Drive Assembly

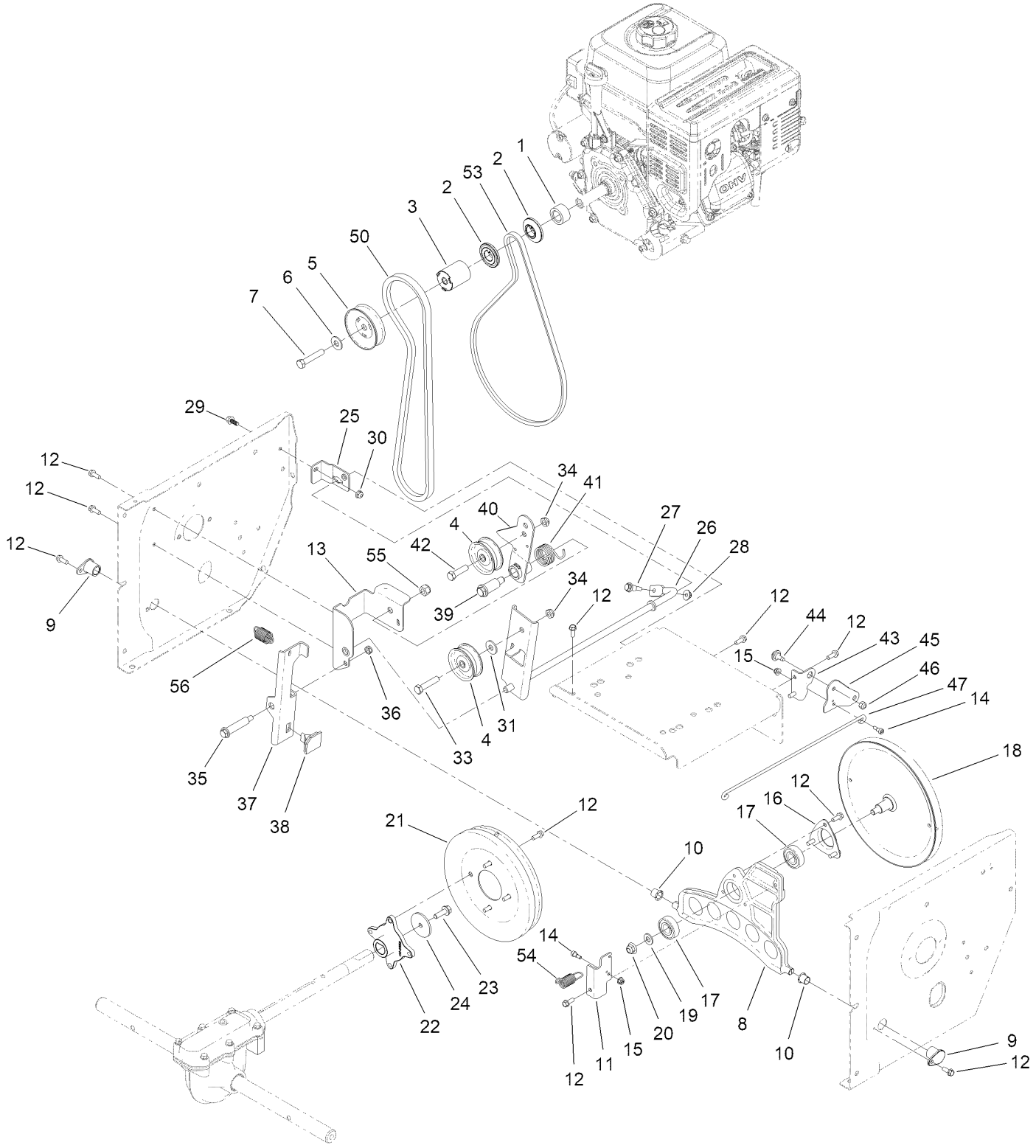

Auger Drive Assembly (continued)

Ref.	Part Number	Qty.	Description
1	144-1242	1	Spacer
2	145-4142	2	Sheave-Traction
3	144-1241	1	Spacer-Pulley
4	3-4244	2	Pulley-Idler
5	137-6179	1	Pulley-Impeller
6	137-3078	1	Washer-Plain
7	120-2302	1	Screw-HH, Patch
8	136-6689	1	Plate-Friction, Wheel
9	120-7156	2	Bushing-Plate, Traction
10	256-257	2	Bushing-Nyliner
11	145-4141	1	Bkt-Traction Plate
12	32144-85	16	Screw-HWH Thd Form
13	136-8671-03	1	Bracket-Brake, Clutch
14	94-9422	2	Screw-Shoulder
15	138-0719	2	Nut-HF
16	136-7124	1	Retainer-Bearing
17	38-7820	2	Bearing-Ball
18	163-6257	1	Traction Pulley ASM
19	115-1166	1	Washer-Plain
20	119-4042	1	Nut-HF, NI
21	138-0717	1	Pulley-Impeller
22	136-6558	1	Hub-Pulley
23	115-5142	1	Screw-HHF, Patch
24	137-3121	1	Washer-Plain
25	136-8654-03	1	Bracket-Clutch, Impeller
26	145-0670	1	Arm-Clutch, Impeller
27	104-0858	1	Bolt-Shoulder
28	137-3016	1	Nut-HF
29	137-3111	1	Screw-HHF
30	137-3005	1	Nut-HF
31	139-2632	1	Washer-Hardened
33	138-0722	1	Screw-HH
34	121-4600	2	Nut-Hex
35	136-7199	1	Bolt-Shoulder
36	137-3089	1	Nut-Hex
37	136-6527	1	Brake Arm
38	66-8060	1	Pad-Brake
39	136-7116	1	Bolt-Shoulder
40	136-7186	1	Arm-Idler, Traction
41	120-3060	1	Spring-Torsion
42	137-3065	1	Screw-HH
43	136-6654	1	Bracket-Bellcrank
44	92-9698	1	Screw-Shoulder
45	144-1622	1	Bellcrank-Drive
46	137-3094	1	Nut-Hex
47	144-1613	1	Link-Traction, HD
50	161-5972	1	Belt-V
53	145-4143	1	Belt 3L
54	137-6189	1	Spring-Extension
55	137-3095	1	Nut-Hex
56	147-9465	1	Spring-Extension

Gearbox Assembly

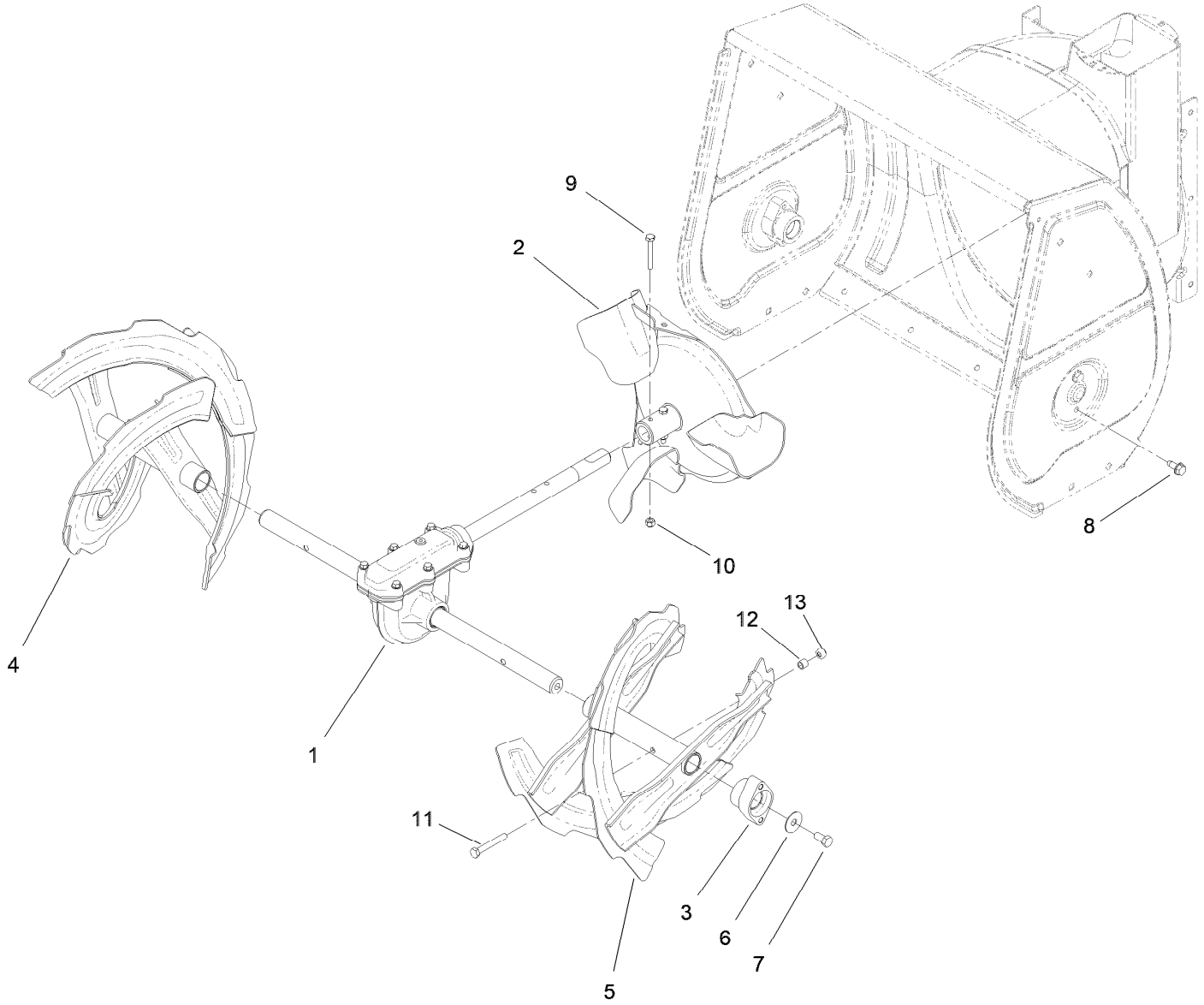

Gearbox Assembly (continued)

Ref.	Part Number	Qty.	Description
1	136-6615	1	Auger Gearcase As (24 In)
2	136-6570-03	1	Impeller
3	106-4570	2	Bearing-Auger
4	145-4101-03	1	Auger-RH, 24" [black]
5	145-4100-03	1	Auger-LH, 24" [black]
6	3-0750	2	Washer
7	137-3066	2	Screw-HH
8	32144-70	4	Screw-HWHTF
9	137-3032	2	Screw-HH
10	137-3088	2	Nut-Hex
11	120-9738	2	Screw-HH
12	136-7148	2	Spacer-Grommet
13	119-4038	2	Nut-Hex

Auger Gearcase Assembly No. 136-6615

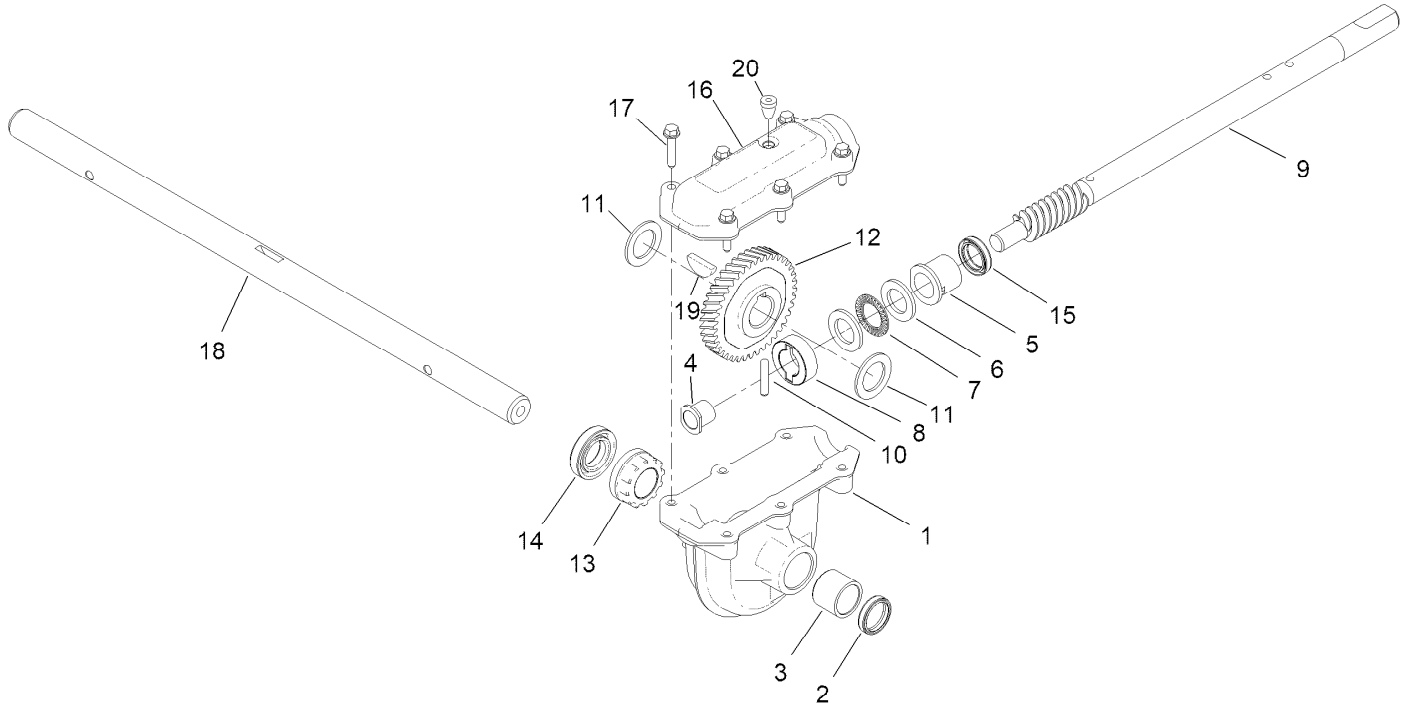

Auger Gearcase Assembly No. 136-6615 (continued)

Ref.	Part Number	Qty.	Description
1	136-6547	1	Gearbox-Lower (Mach)
2	137-6173	1	Seal-Oil
3	112-6635	1	Bushing-Sleeve
4	136-6556	1	Bushing-Impeller Shaft, Front
5	37-6560	1	Bushing-Input
6	252-78	2	Washer-Thrust
7	252-76	1	Bearing-Thrust
8	136-6555	1	Collar-Thrust
9	137-6175	1	Shaft-Impeller
10	107-8899	1	Pin-Dowel
11	252-71	2	Washer-Thrust
12	138-0696	1	Gear-Helical
13	136-6553	1	Bushing-Auger Output
14	136-6554	1	Seal-Oil
15	137-6174	1	Seal-Oil
16	136-6546	1	Cover-Gearcase
17	108-4862	6	Screw-HWH Thd Roll
18	136-6618	1	Shaft-Auger, 24
19	3257-10	1	Key-Woodruff
20	138-3629	1	Plug-Oil

Engine Assembly

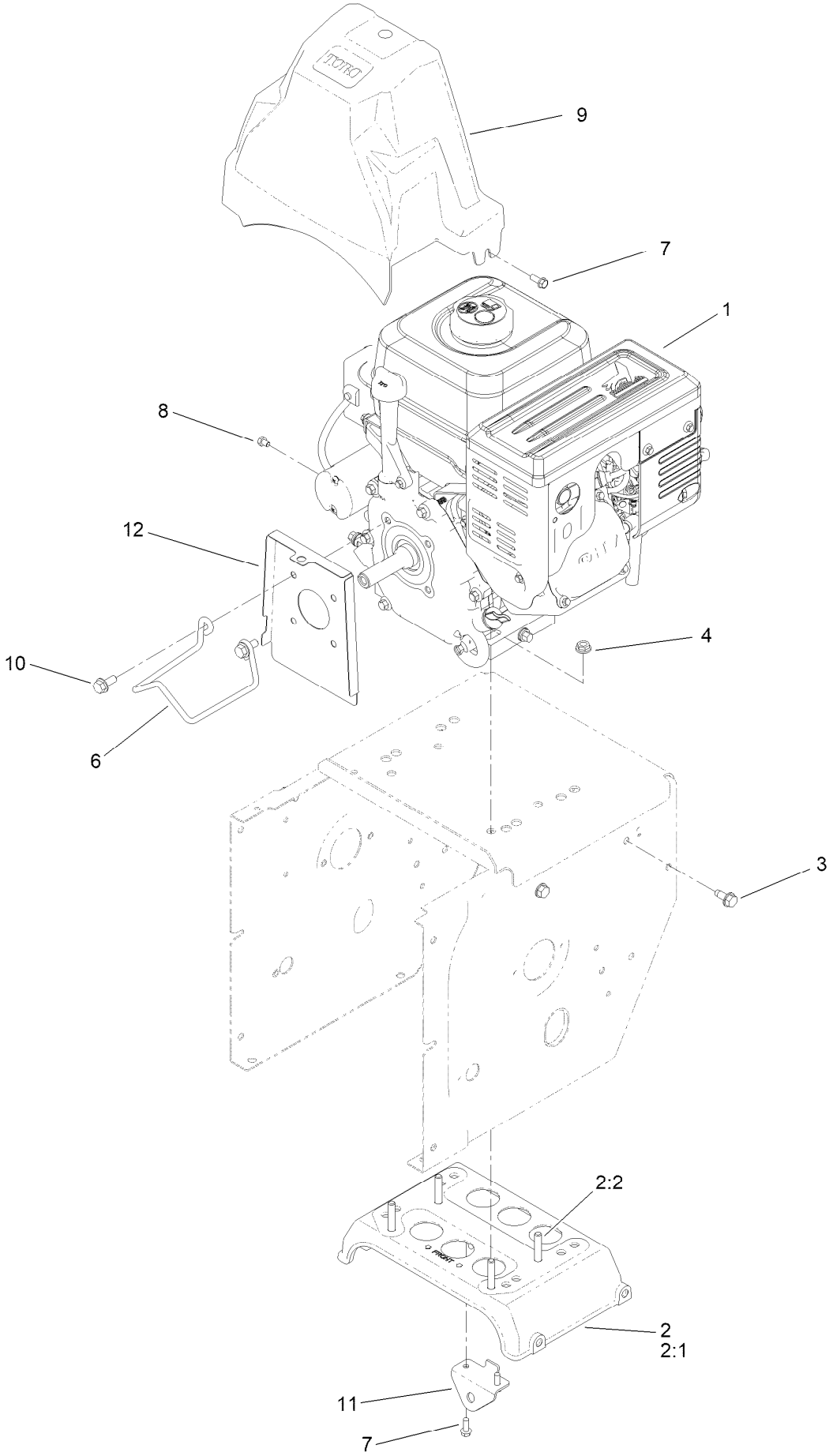

Engine Assembly (continued)

Ref.	Part Number	Qty.	Description
1	147-7057	1	Engine-G250Fds-1
2	144-1625	1	Engine Plate ASM (G250)
2:1	144-1626	1	Plate-Engine
2:2	136-7178	4	Stud-Press 95/16-18 X 1.625)
3	32144-70	4	Screw-HWHTF
4	137-3039	4	Nut-HF
6	144-2816	1	Guide-Belt
7	32144-85	4	Screw-HWH Thd Form
8	121-4615	1	Screw-HH
9	138-0731	1	Belt Cover, No Light
10	138-0690	2	Screw-HHF,Patch
11	136-6644-03	1	Bracket-Control, Traction
12	140-7945-03	1	Cover-Crank

Chute Assembly

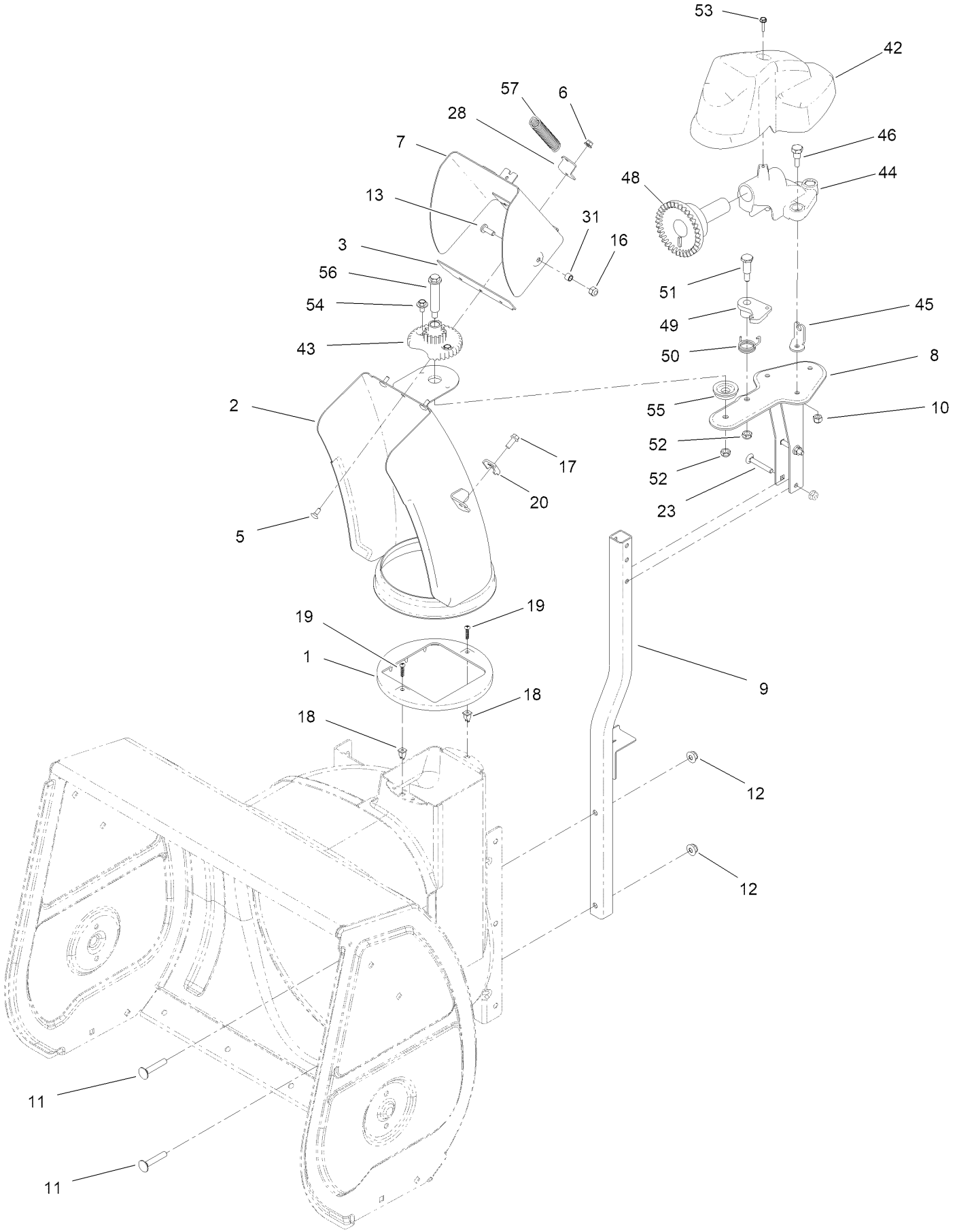

Chute Assembly (continued)

Ref.	Part Number	Qty.	Description
1	136-6515	1	Guide-Chute
2	144-1246-01	1	Chute-Lower ASM [red]
3	138-3671	1	Gasket-Deflector
5	135-1929	3	Bolt-CARR
6	138-0719	3	Nut-HF
7	164-5442	1	Deflector-W/Decal
8	145-0691-03	1	Support-Chute Weld ASM, Upper
9	144-1647-03	1	Support-Chute Weld ASM, Lower
10	137-3088	3	Nut-Hex
11	137-3063	2	Bolt-Car
12	119-4041	2	Nut-HF
13	138-0689	1	Screw-PH
16	137-3094	1	Nut-Hex
17	32144-85	1	Screw-HWH Thd Form
18	136-6586	2	Grommet-Screw
19	94-4496	2	Screw-PPH
20	136-7191	1	Clamp-Cable
23	120-9698	2	Bolt-CARR
28	138-3612-01	1	Bracket-Spring
31	138-3678	1	Spacer
37	321-3	2	Screw-HH ●
42	136-6672	1	Cover-Gear, Face
43	106-4472	1	Gear-Chute
44	136-6517	1	Mount-Gear, Face
45	136-6676	1	Anchor-Cable
46	136-7197	3	Screw-Shoulder
48	106-4471	1	Gear-Face
49	136-6525	1	Latch-Chute
50	108-7315	1	Spring-Torsion
51	137-3103	1	Screw-Shoulder, HH
52	137-3089	1	Nut-Hex
53	137-3110	1	Screw-Plastite, HWH
54	46-6810	2	Screw And Washer ASM
55	106-4422	1	Spacer-Chute
56	136-7199	1	Bolt-Shoulder
57	138-8493	1	Spring-Chute, Upper

● Not illustrated

Quickstick Assembly

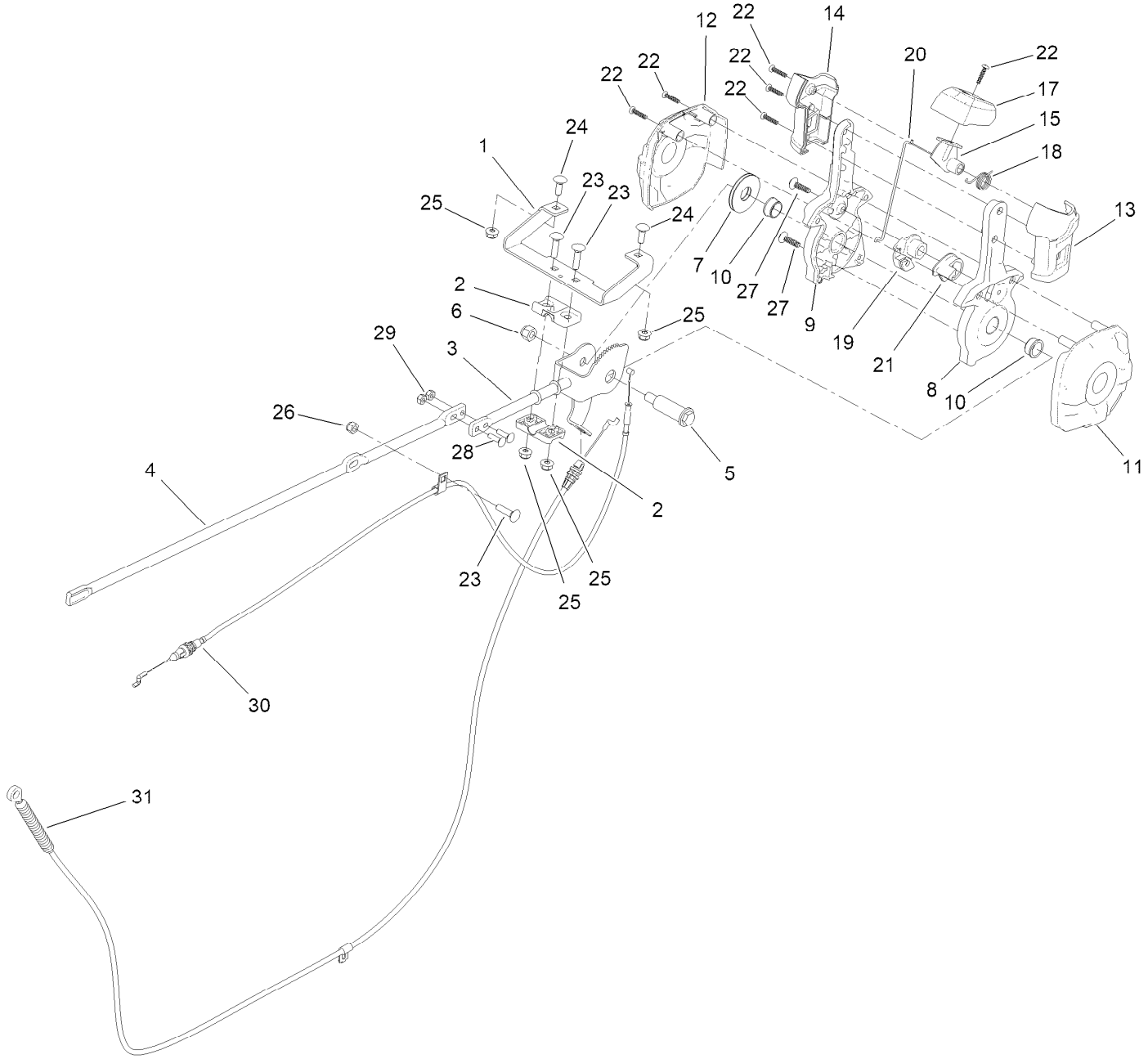

Quickstick Assembly (continued)

Ref.	Part Number	Qty.	Description
1	164-2796-03	1	Bracket-Dash, Qs
2	105-9987	2	Support-Rod
3	164-4911	1	ASM-Control, Chute Rod
4	164-4910	1	Rod-Chute-Gear
5	138-0659	1	Screw-Shoulder, HWH
6	137-3087	1	Nut-Hex
7	138-0744	1	Washer-Friction, Composite
8	161-1195	1	Handle-LH
9	161-1194	1	Handle-RH
10	126-6199	2	Bushing
11	161-1199	1	Cover-LH
12	161-1198	1	Cover-RH
13	161-1196	1	Grip-LH
14	161-1197	1	Grip-RH
15	137-6238	1	Trigger-Latch

Ref.	Part Number	Qty.	Description
17	164-4900	1	Cap-Lever
18	105-9982	1	Spring-Torsion
19	105-9988	1	Lever-Cable, Deflector
20	138-0688	1	Link-Latch
21	106-7310	1	Pawl-Latch
22	94-4496	6	Screw-PPH
23	137-3056	3	Bolt-CARR
24	137-3053	2	Screw-CARR
25	119-4040	4	Nut-HF, NI
26	137-3094	1	Nut-Hex
27	120-2349	2	Screw
28	139-2629	2	Screw-CARR
29	137-3085	2	Nut-Hex
30	139-9903	1	Cable-Release, Chute
31	164-2791	1	Cable-Deflector Control

Handle and Control Assembly

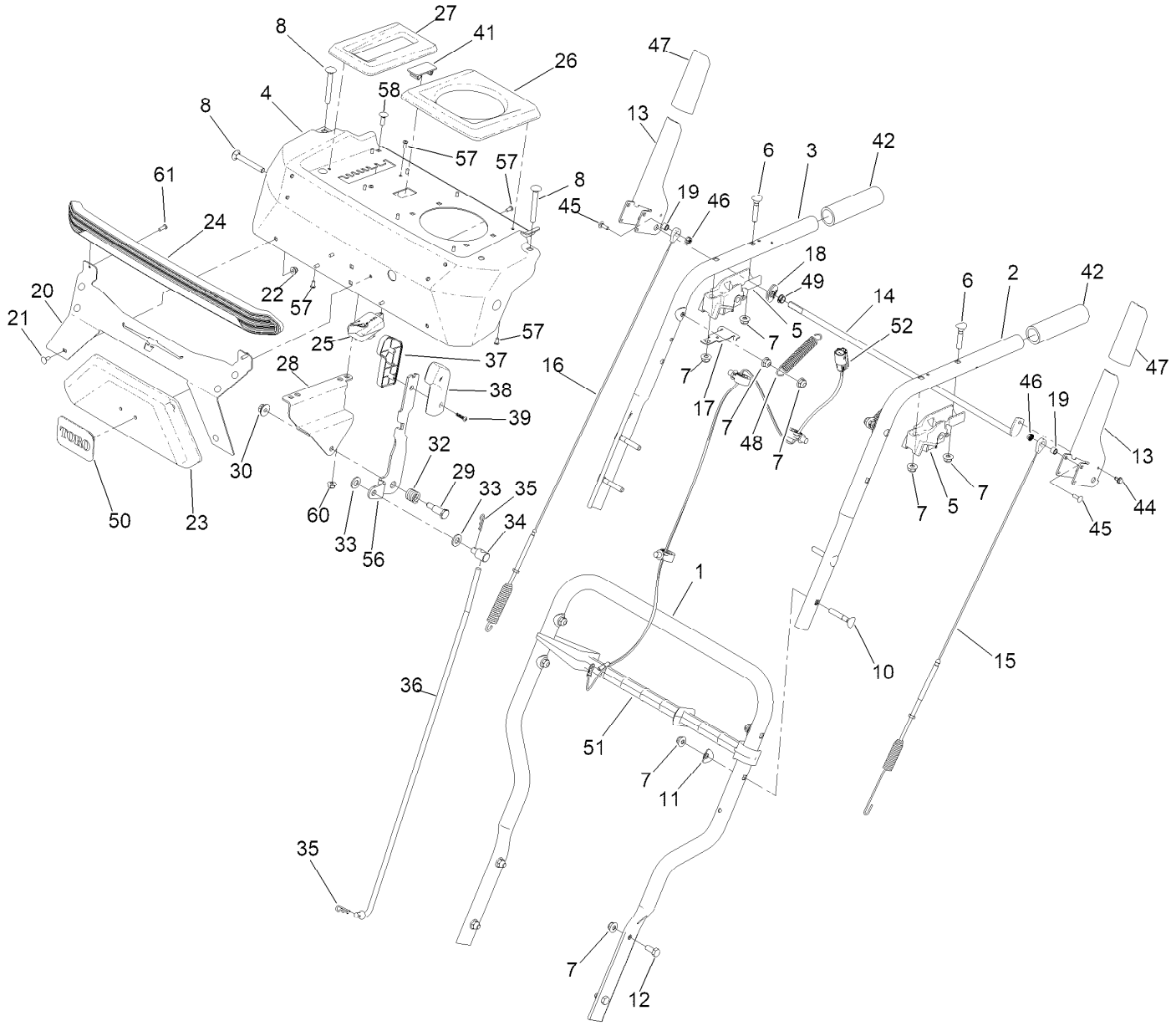

Handle and Control Assembly (continued)

Ref.	Part Number	Qty.	Description
1	163-0275-03	1	Handle-Lower
2	161-5780-03	1	Handle-Upper, LH
3	161-5781-03	1	Handle-Upper, RH
4	163-6250-01	1	Control Panel
5	145-4149	2	Block, Hand Controls
6	137-3008	2	Screw-Handle
7	138-8401	16	Nut-HF
8	164-5422	4	Screw-CARR
10	137-3107	4	Screw-Handle
11	137-3009	6	Washer-Cup
12	137-3052	4	Screw-HH
13	163-0268-03	2	Lever-Snow
14	163-0272	1	Rod-Pivot
15	145-4130	1	Cable-Traction
16	145-4131	1	Cable-Auger
17	163-0299	1	Latch-Lockout
18	164-0556	1	Cam
19	138-3678	2	Spacer
20	163-6207-03	1	HD Front Panel
21	135-1929	6	Bolt-CARR
22	138-0719	6	Nut-HF
23	163-6204	1	Nameplate-Housing
24	164-2710	1	Lightbar-Light
25	164-2711	1	Lightbar-Box
26	164-2785	1	Qs-Plate
27	164-2707	1	Trim, Speed Control
28	163-0265-03	1	Bracket-Traction

Ref.	Part Number	Qty.	Description
29	137-3103	1	Screw-Shoulder, HH
30	137-3038	1	Nut-HF
32	136-7121	1	Spring-Compression
33	115-1166	2	Washer-Plain
34	136-7193	1	Trunnion-Rod
35	137-3083	2	Pin-Hair
36	137-6225	1	Rod-Shift
37	164-4906	1	Knob-Shift, RH
38	164-4907	1	Knob-Shift, LH
39	94-4496	2	Screw-PPH
41	99-7420	1	Plug-Hole
42	161-5998	2	Grip-Handle
44	104-2065	1	Screw-HWH
45	137-9471	2	Screw-CARR
46	118-1721	2	Nut,Hex Flange,10-24,Sst, Rie2006
47	161-1173	2	Grip-Lever
48	138-8493	2	Spring-Chute, Upper
49	5979	1	Bushing-Nyliner
50	164-2753	1	Logo, Toro
51	110-3408	1	Stick-Cleanout
52	164-2745	1	Harness-Wire, LED
56	137-6231-03	1	Selector-Speed
57	105-9437	14	Screw-PPH
58	137-3053	2	Screw-CARR
60	119-4040	2	Nut-HF, NI
61	94-6961	2	Screw

Drive Assembly

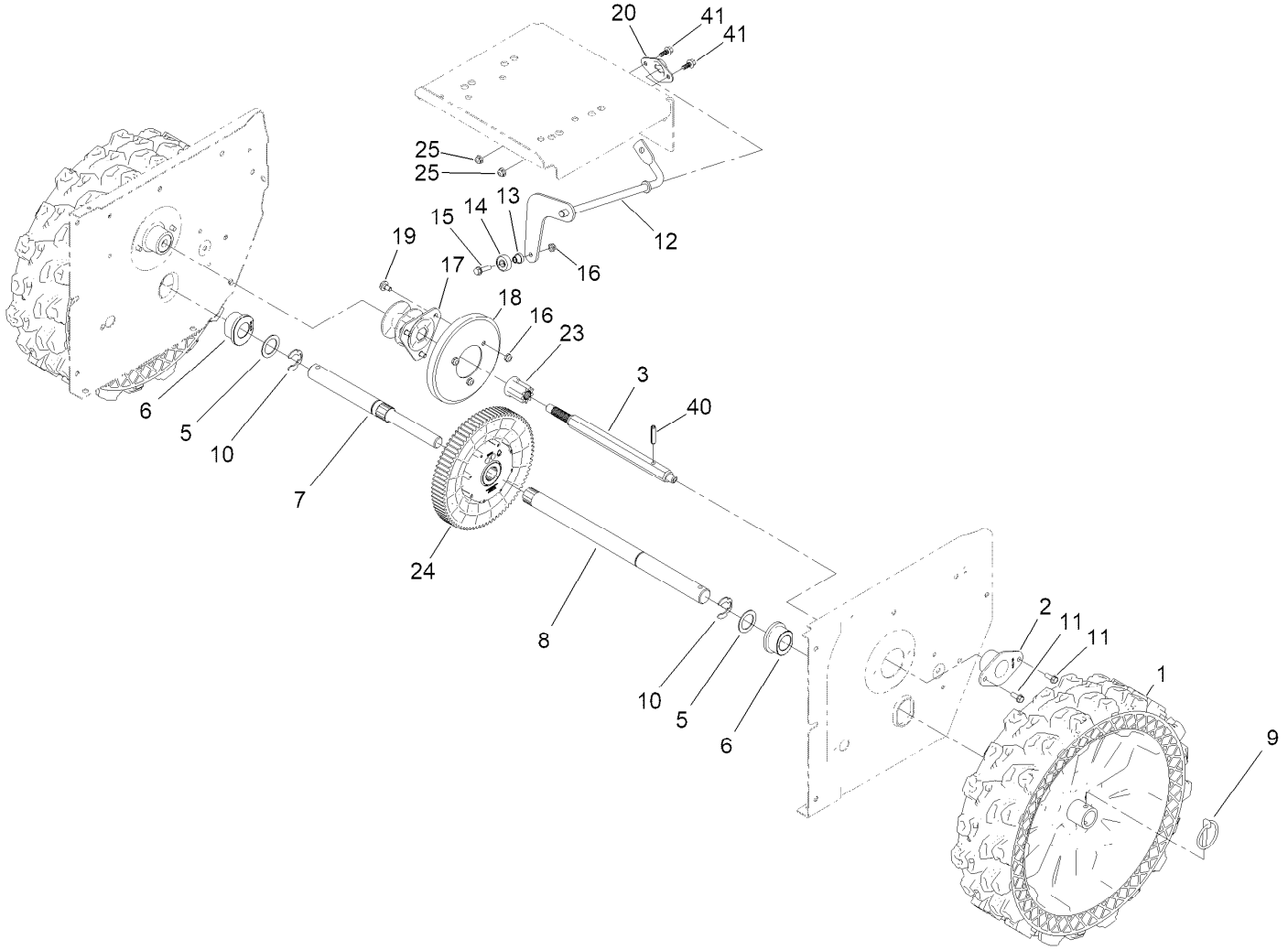

Drive Assembly (continued)

Ref.	Part Number	Qty.	Description
1	145-4145	2	16" Airless Snow Tire
2	108-7319	2	Retainer-Bearing
3	163-6259	1	Shaft-Hex, HD
5	138-0725	2	Washer-Thrust
6	136-6641	2	Bushing-Axle
7	140-3711	1	Axle-Rt, HD
8	140-3736	1	Axle -Lt, HD
9	138-3642	2	Pin-Klik
10	32151-91	2	Ring-Retaining
11	32144-85	4	Screw-HWH Thd Form
12	137-6162-03	1	Rod-Shift
13	119-7684	1	Spacer-Plate, Shift
14	121-6835	1	Bearing-Ball
15	32144-86	1	Screw-HWHTF
16	137-3091	4	Nut-Hex
17	119-7630	1	Trunnion
18	119-1567	1	Wheel-Friction
19	137-6246	3	Screw-Shoulder
20	136-6647-03	1	Retainer-Rod, Shift
23	163-6261	1	Gear-Pinion 9 Tooth
24	163-6260	1	Transmission-Gt, Di200
25	137-3005	2	Nut-HF
40	32121-9	1	Pin-Roll, Slotted
41	137-3111	2	Screw-HHF

Decal Assembly

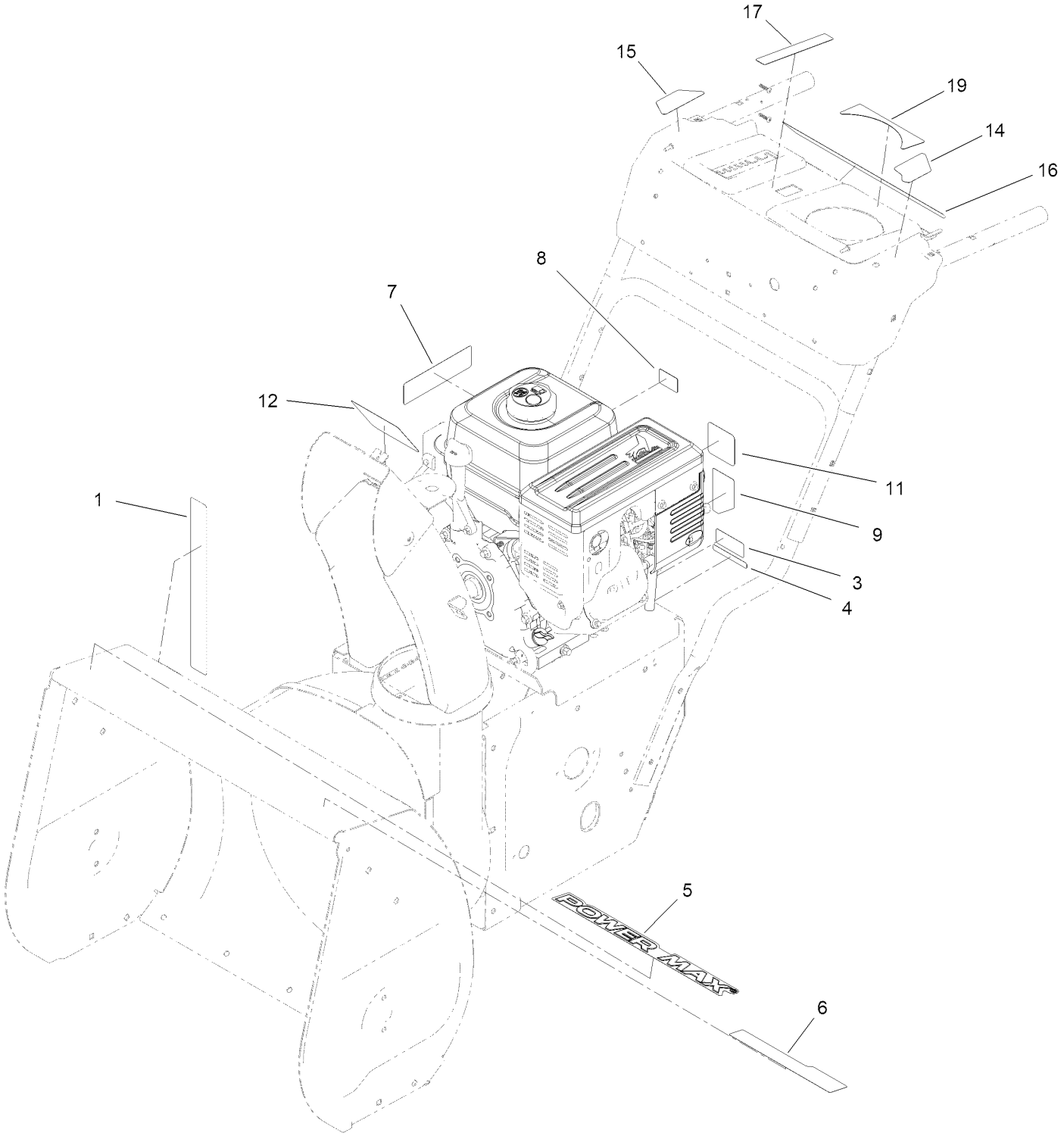

Decal Assembly (continued)

Ref.	Part Number	Qty.	Description
1	164-2713	1	Decal-Safety
3	121-5684	1	Decal-Location, Service Dealer
4	133-8061	1	Decal-Warning
5	164-2720	1	Decal-Power Max
6	164-5403	1	Decal-Heavy Duty 24
7	161-6034	1	Decal - 252Cc Ohv
8	125-1102	1	Decal-Throttle
9	120-9805	1	Decal-Control, Engine
11	131-5912	1	Decal-Recoil, G250
12	137-6198	1	Decal-Danger
14	164-2715	1	Decal-Drive
15	164-2714	1	Decal-Auger
16	164-5400	1	Decal-Power Max, HD 24
17	164-2717	1	Decal-Throttle
19	164-2716	1	Decal-Quick Stick

Fuel System and Carburetor Assembly

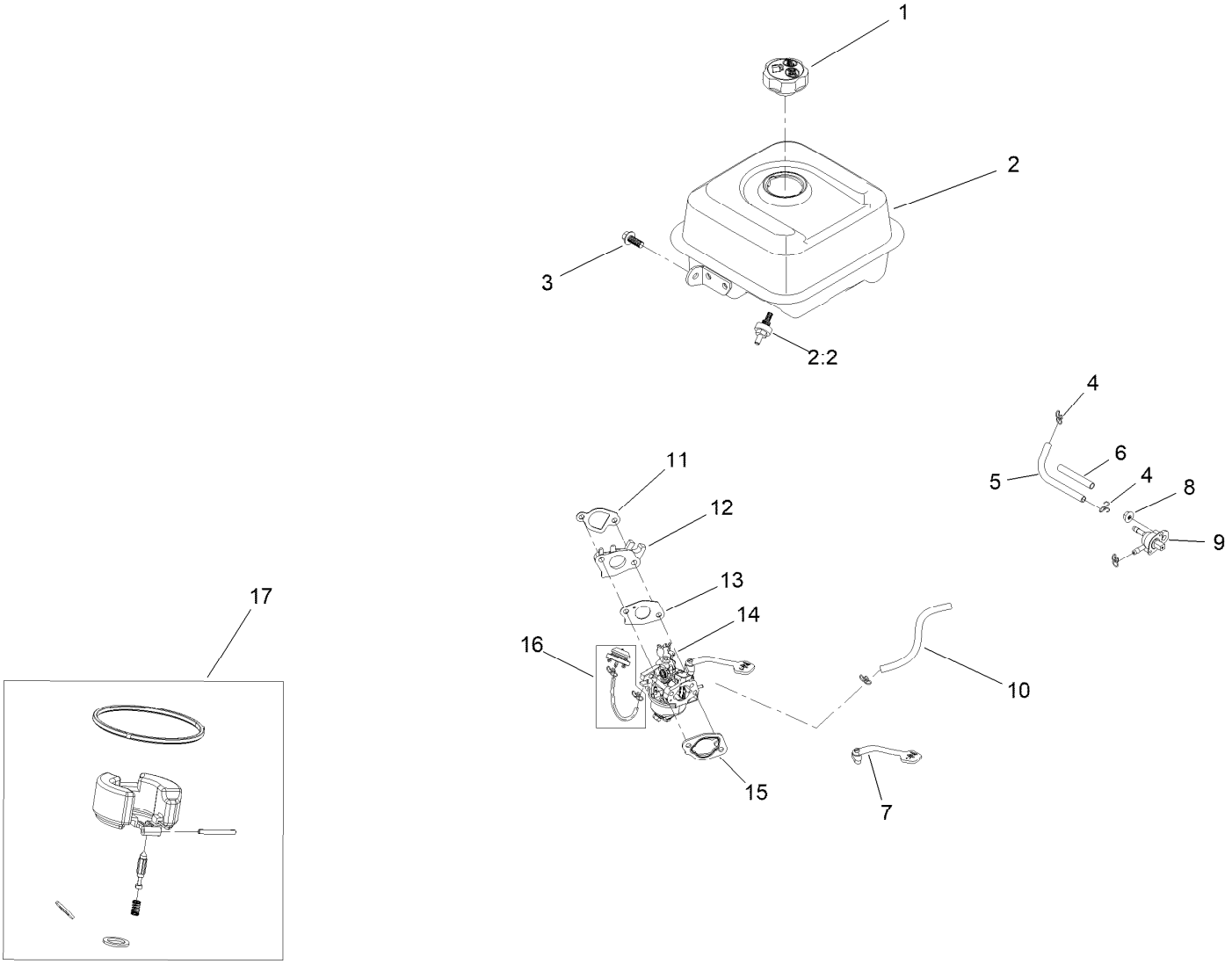

Fuel System and Carburetor Assembly (continued)

Ref.	Part Number	Qty.	Description
1	133-9823	1	Cap-Fuel
2	133-1553	1	Fuel Tank And Filter ASM
2:2	127-9065	1	Filter-Fuel
3	121-0294	1	Screw-HHF
4	147-7077	4	Clip-Hose
5	147-7087	1	Hose-Fuel
6	147-7088	1	Sleeve-Abrasion
7	147-7096	1	Lever-Choke
8	120-4236	1	Nut-Flange
9	127-9117	1	Valve-Fuel
10	147-7086	1	Hose-Fuel
11	133-1531	1	Gasket-Carburetor
12	133-1532	1	Insulator-Carburetor
13	133-1533	1	Gasket-Carburetor
14	133-1534	1	Carburetor ASM
15	121-0080	1	Gasket-Carburetor
16	127-9079	1	Primer Kit
17	127-9395	1	Internal Carb Service Kit
99	133-9937	1	High Altitude Kit ●

● Not illustrated

Intake and Exhaust Assembly

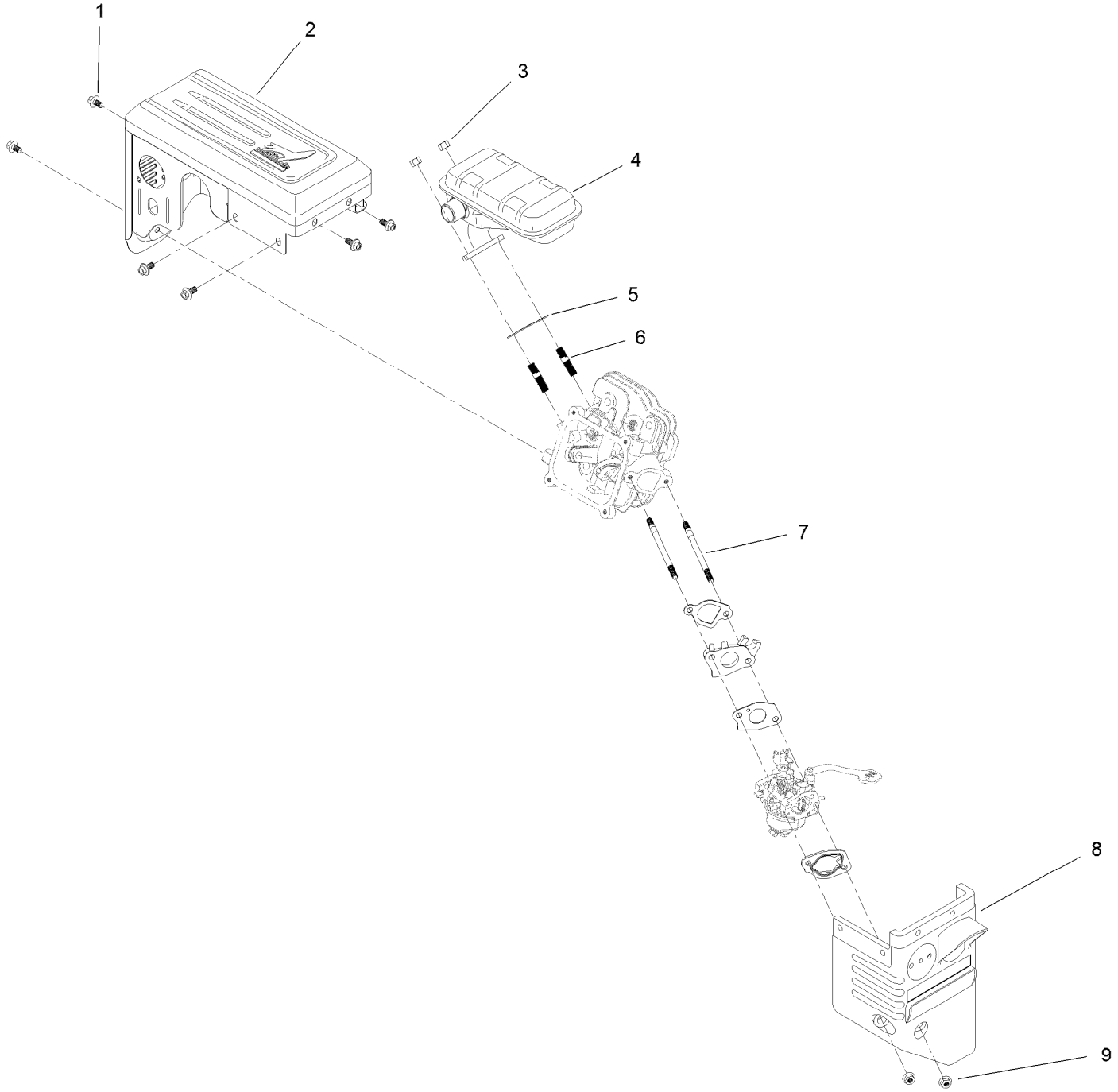

Intake and Exhaust Assembly (continued)

Ref.	Part Number	Qty.	Description
1	121-0294	6	Screw-HHF
2	127-9491	1	Muffler Cover ASM
3	121-0199	2	Nut-HH
4	127-9490	1	Muffler ASM
5	133-1539	1	Gasket-Exhaust
6	121-0464	2	Stud-Exhaust
7	121-4112	2	Stud-Intake
8	127-9112	1	Box-Heater
9	121-0308	2	Nut-Flange

Ignition and Electrical Assembly

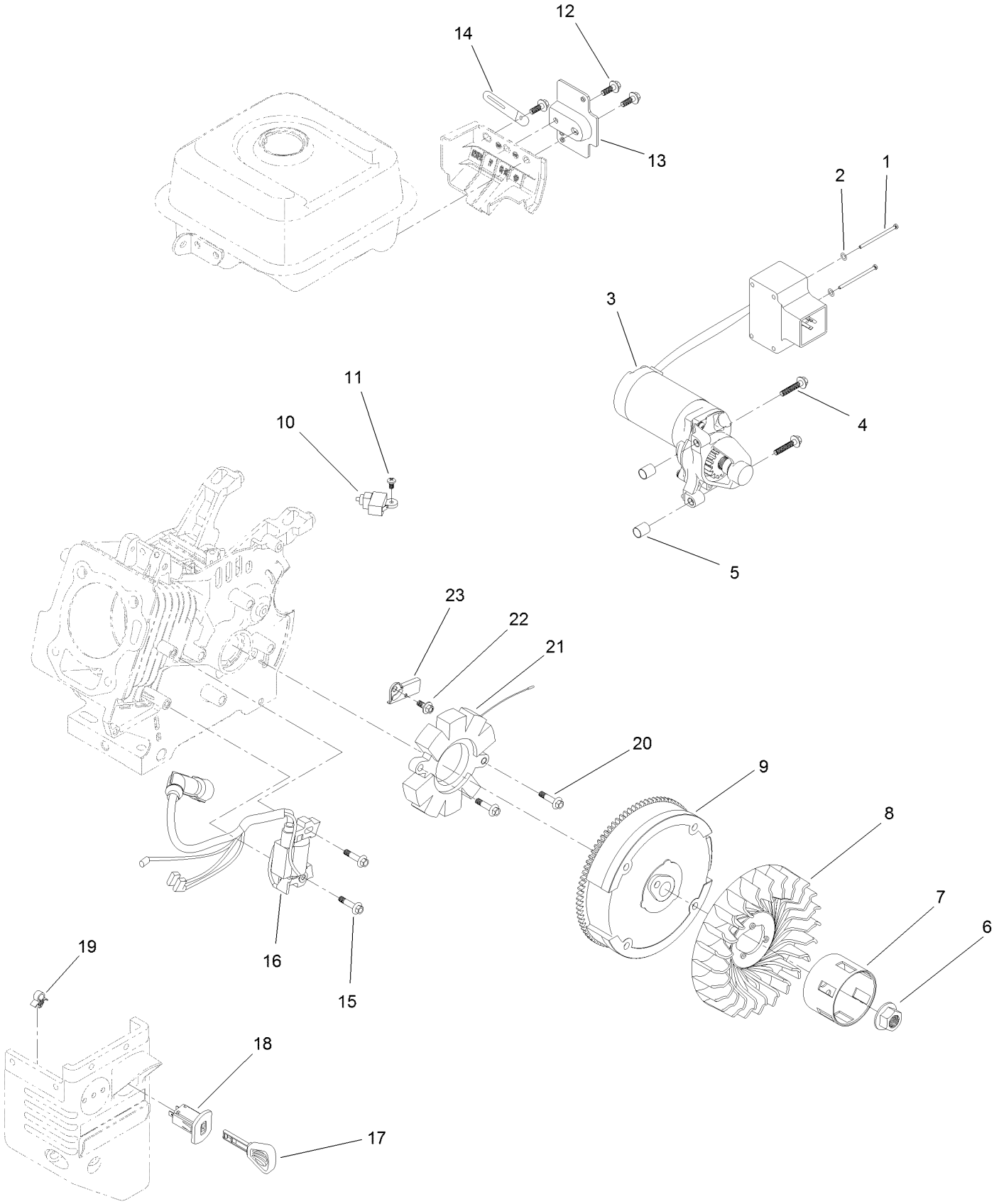

Ignition and Electrical Assembly (continued)

Ref.	Part Number	Qty.	Description
1	121-0306	2	Screw-Bhp
2	121-0312	2	Washer-Plain
3	144-0988	1	Motor-Starter
4	133-1546	2	Screw-Flange
5	121-0055	2	Pin-Dowel
6	121-0047	1	Nut-Flange
7	133-1527	1	Cup-Starter
8	133-1526	1	Fan-Cooling
9	127-9484	1	Flywheel ASM
10	121-0284	1	Switch-Kill, Engine
11	120-4461	1	Screw-PPH
12	127-9123	3	Screw-HHF
13	133-1554	1	Bracket-Switchbox, Starter
14	121-0017	1	Clip-Harness, Wire
15	121-0097	2	Screw-HHF
16	133-9996	1	Ignition Coil ASM
17	117-7728	1	Key
18	121-0283	1	Switch-Key
19	121-0326	1	Clip
20	121-0196	2	Screw-HHF
21	127-9485	1	Alternator
22	121-0116	1	Screw-HHF
23	127-9486	1	Clamp-Wire, Charge

Crankcase Assembly

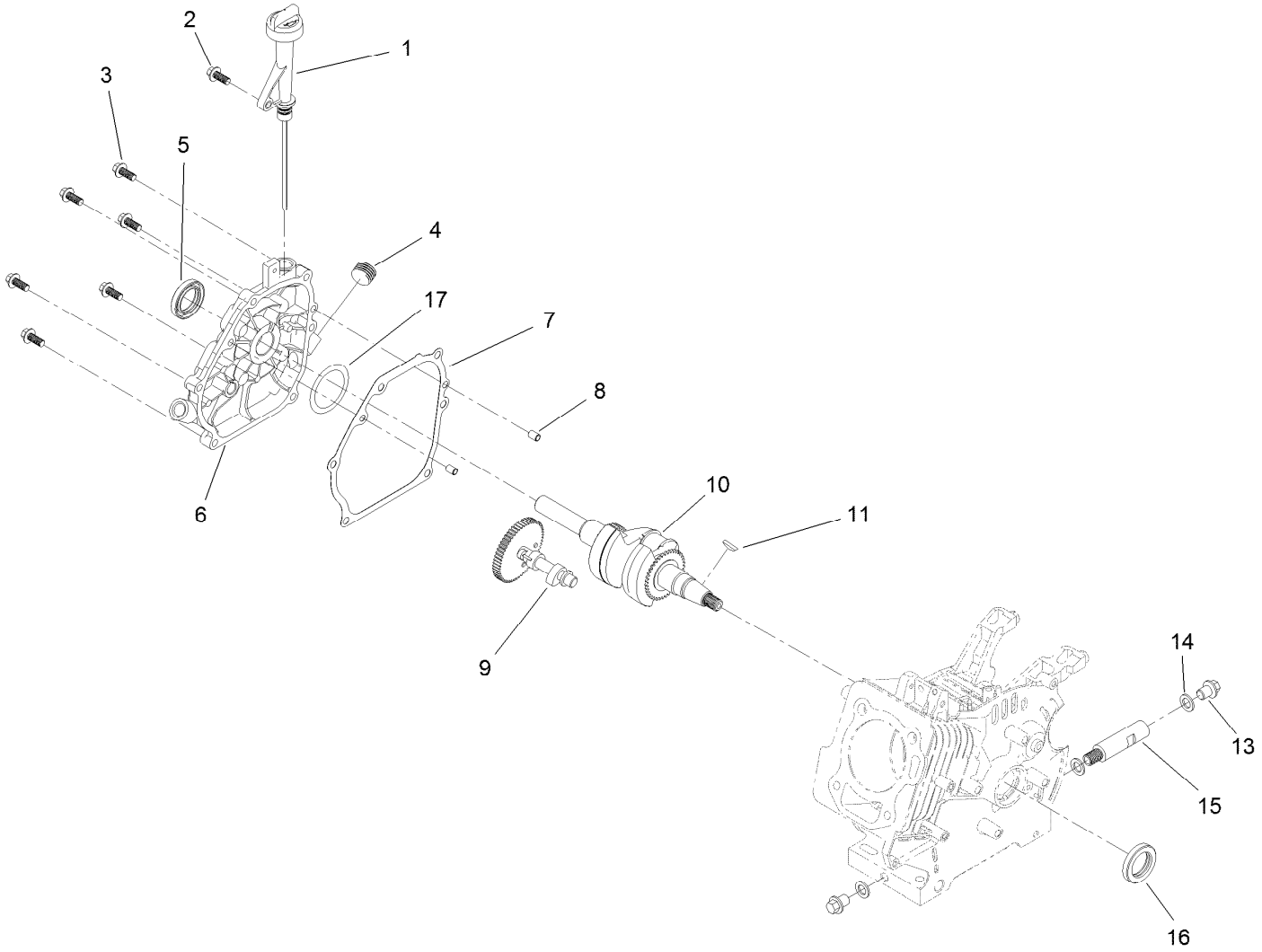

Crankcase Assembly (continued)

Ref.	Part Number	Qty.	Description
1	139-0734	1	Oil Fill ASM
2	127-9123	1	Screw-HHF
3	121-4114	6	Screw-HHF
4	133-9805	1	Plug-Drain
5	133-1516	1	Seal-Oil
6	133-9865	1	Cover-Crankcase
7	127-9493	1	Gasket-Cover, Crankcase
8	121-0054	2	Pin-Dowel
9	133-9991	1	Camshaft ASM
10	127-9495	1	Crankshaft
11	120-4320	1	Key-Woodruff
13	121-0030	2	Screw-HHF
14	121-0048	3	Washer-Plain
15	127-9104	1	Tube-Drain, Oil
16	133-9864	1	Seal-Oil
17	133-9863	1	Washer-Thrust

Governor Assembly

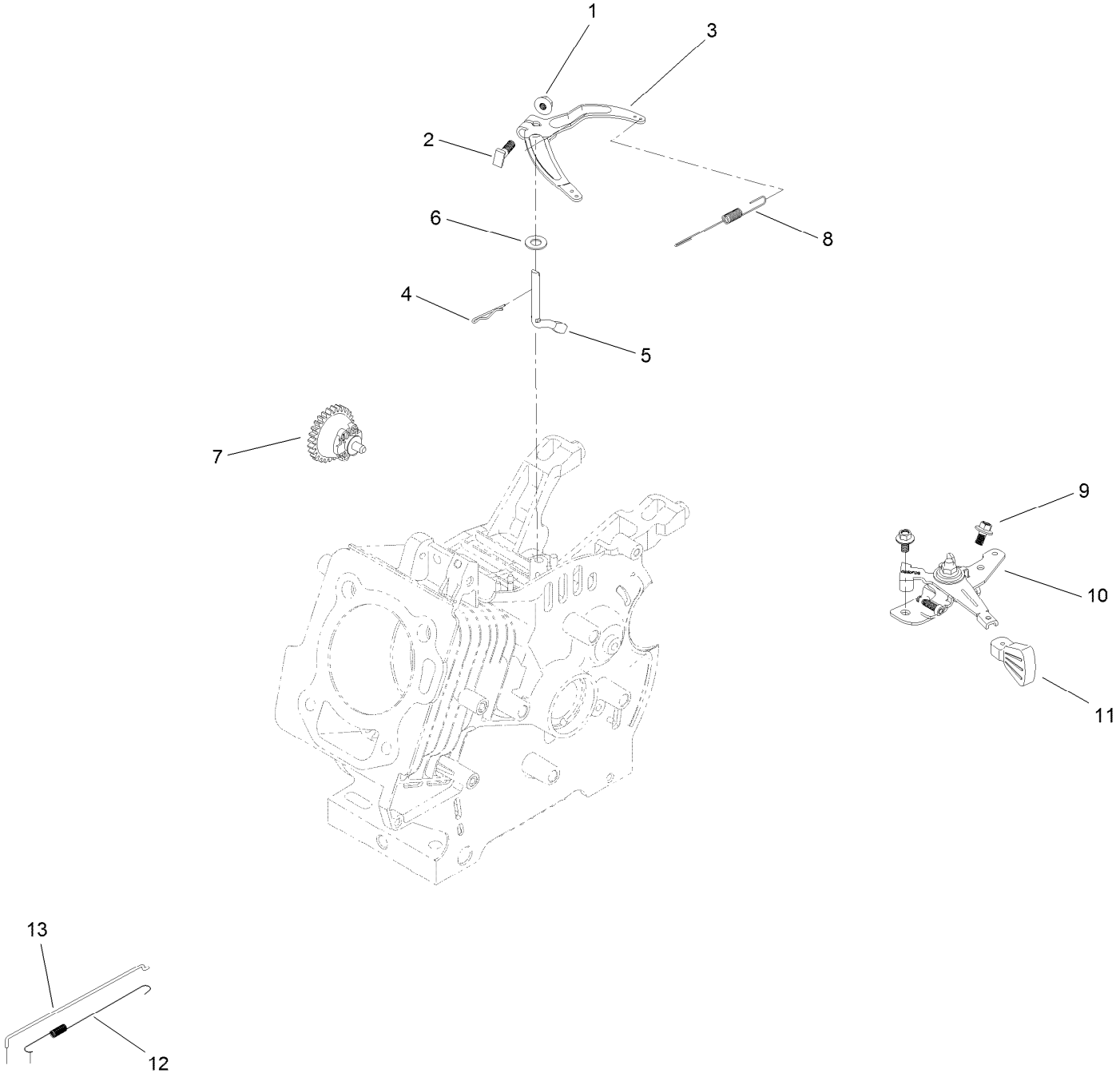

Governor Assembly (continued)

Ref.	Part Number	Qty.	Description
1	120-4236	1	Nut-Flange
2	120-4238	1	Bolt-Arm, Governor
3	127-9482	1	Arm-Governor
4	120-4256	1	Pin-Hair
5	133-9995	1	Shaft-Governor
6	121-0498	1	Washer-Plain
7	133-9994	1	Governor Gear ASM
8	127-9483	1	Spring-Governor
9	121-0116	2	Screw-HHF
10	133-1555	1	Throttle Control ASM
11	121-0269	1	Knob-Control, Throttle
12	133-1536	1	Spring-Return, Throttle
13	133-1535	1	Rod-Governor

Piston and Head Assembly

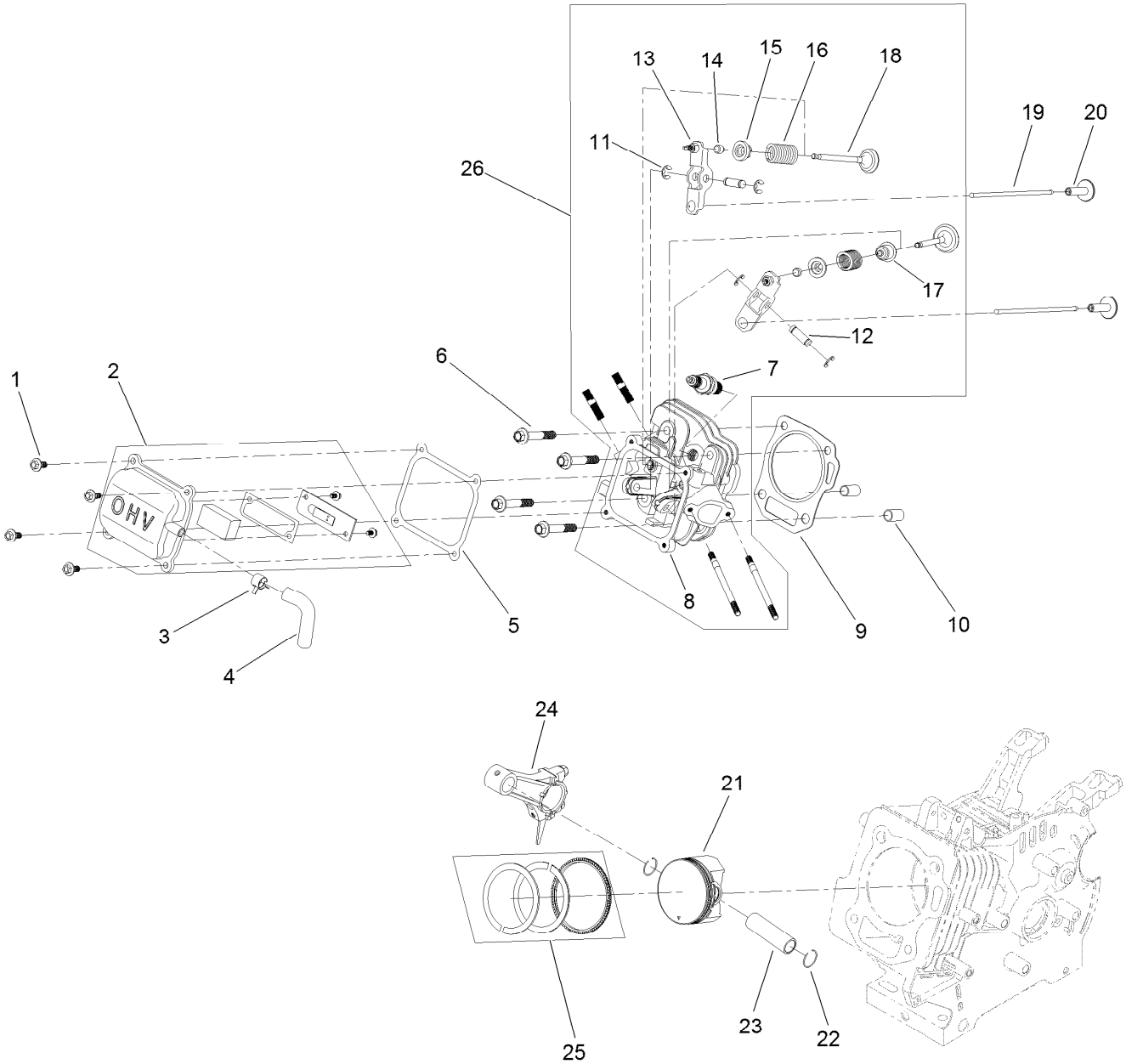

Piston and Head Assembly (continued)

Ref.	Part Number	Qty.	Description
1	120-4454	4	Screw-HHF
2	133-1500	1	Valve Cover ASM
3	133-1558	1	Clamp-Hose
4	133-9990	1	Tube-Breather
5	133-1507	1	Gasket-Cover, Valve
6	133-1508	4	Screw-Flange
7	81-3250	1	Spark Plug
8	133-1509	1	Head-Cylinder
9	133-1510	1	Gasket-Head
10	120-4200	2	Pin-Dowel
11	133-1511	4	E-Clip
12	133-1512	2	Pin-Arm, Rocker
13	133-1513	2	Rocker Arm ASM
14	121-4116	2	Rotator-Valve
15	121-4117	2	Retainer-Spring, Valve
16	127-9014	2	Spring-Valve
17	121-4202	1	Seal-Stem, Valve
18	133-1515	1	Set-Valve
19	133-1514	2	Rod-Push
20	127-9015	2	Tappet-Valve
21	133-1522	1	Piston
22	121-0313	2	Clip-Pin, Piston
23	121-4128	1	Pin-Piston
24	121-4123	1	Connecting Rod ASM
25	133-1521	1	Set-Ring, Piston
26	133-9867	1	Complete Head ASM

Blower Housing and Shrouds Assembly

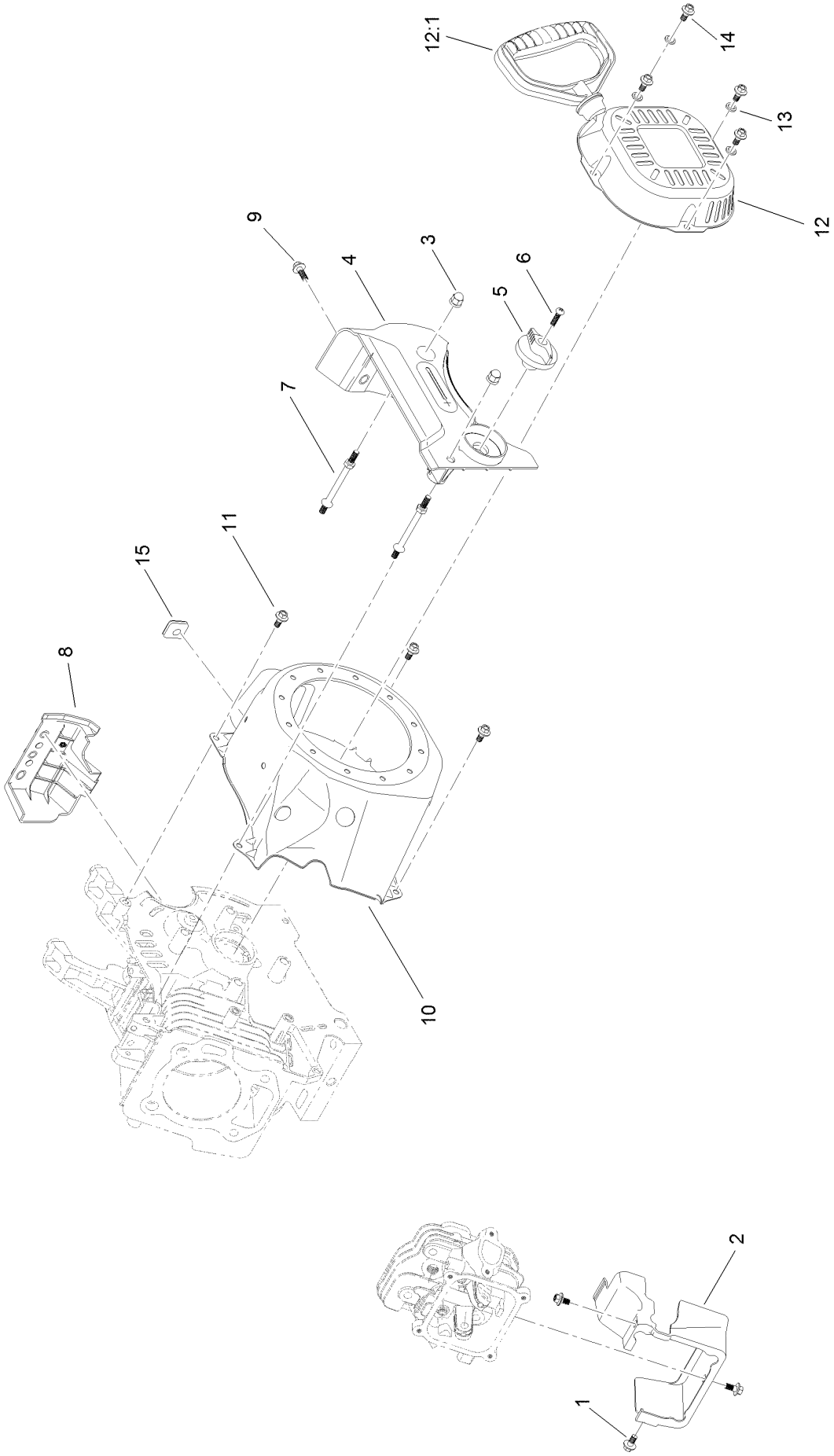

Blower Housing and Shrouds Assembly (continued)

Ref.	Part Number	Qty.	Description
1	121-0116	3	Screw-HHF
2	133-1530	1	Shroud-Head
3	127-9383	2	Nut-Acorn
4	133-1557	1	Panel-Control, Front
5	121-0268	1	Knob-Valve, Fuel
6	121-0305	1	Screw-Bhp
7	127-9110	2	Stud-Mount
8	133-1543	1	Panel-Side, Engine
9	127-9123	1	Screw-HHF
10	133-1528	1	Shroud-Flywheel
11	121-0294	3	Screw-HHF
12	127-9487	1	Recoil ASM
12:1	121-0287	1	Handle-Recoil
13	127-9380	4	Washer-Plain
14	127-9031	4	Screw-HHF
15	133-1548	1	Grommet-Rubber

Attachments and Accessories

For 39960 — Power Max Heavy Duty 824 Snowthrower

Product Name	Model/Part
High-Altitude Kit	121-4241
Heavy-Duty Skid Kit	125-1104
KIT-HEATED GRIPS	164-4824
MAINT KIT TORO 163/212/252CC	20300
Non-Marking Skid Kit	38211
Drift Breaker Kit	38213
Toro Snow Oil 0W30 Synthetic 20-Ounce Bottle	38913
Power Max HD Covers (2019)	490-7415

Notes:

TORO®

Count on it.