Form No. 3465-345 Rev B

TORO®

Count on it.

Operator's Manual

Multi Pro® WM Turf Sprayer

Model No. 41240—Serial No. 415249826 and Up

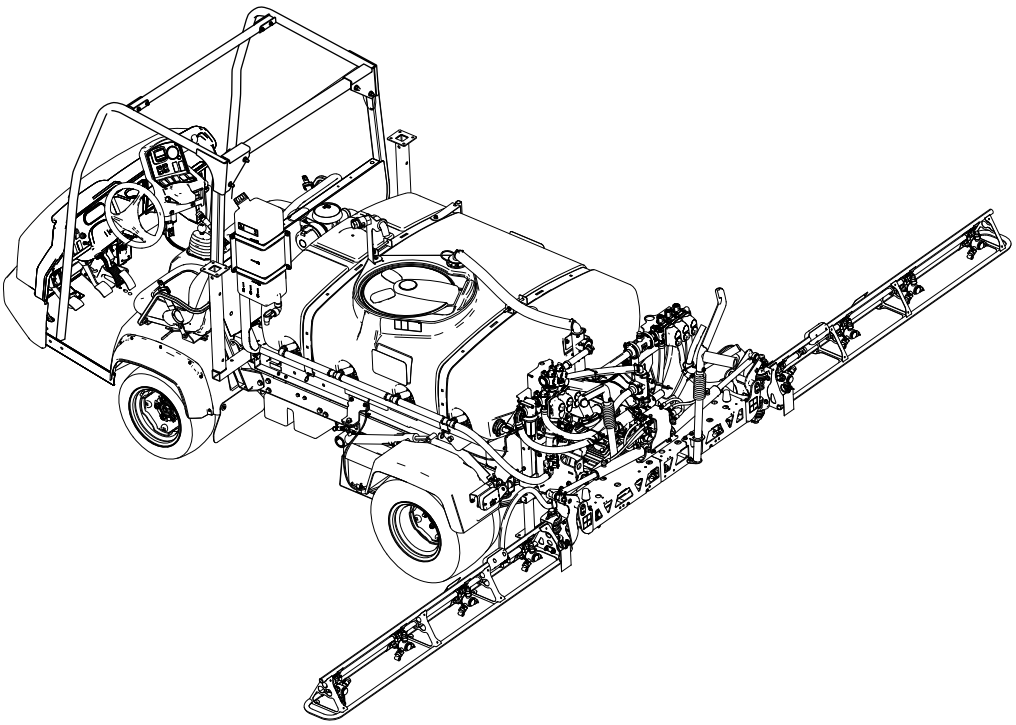

Note: The installation of the Multi Pro WM requires the installation of 1 or more interdependent kits. Contact your authorized Toro distributor for more information.

Register at www.Toro.com.
Original Instructions (EN)

CE UK CA

3465-345

This product complies with all relevant European directives; for details, please see the separate product specific Declaration of Conformity (DOC) sheet.

It is a violation of California Public Resource Code Section 4442 or 4443 to use or operate the engine on any forest-covered, brush-covered, or grass-covered land unless the engine is equipped with a spark arrester, as defined in Section 4442, maintained in effective working order or the engine is constructed, equipped, and maintained for the prevention of fire.

⚠ WARNING

CALIFORNIA
Proposition 65 Warning

Use of this product may cause exposure to chemicals known to the State of California to cause cancer, birth defects, or other reproductive harm.

Introduction

When properly installed, this attachment converts a vehicle into a dedicated turf spray application machine, and it is intended to be used by professional, hired operators in commercial applications. It is designed primarily for spraying on well-maintained lawns in parks, golf courses, sports fields, and on commercial grounds.

Read this information carefully to learn how to operate and maintain your product properly and to avoid injury and product damage. You are responsible for operating the product properly and safely.

Visit www.Toro.com for more information, including safety tips, training materials, accessory information, help finding a dealer, or to register your product.

Whenever you need service, genuine Toro parts, or additional information, contact an Authorized Service Dealer or Toro Customer Service and have the model and serial numbers of your product ready. Figure 1 identifies the location of the model and serial numbers on the product. Write the numbers in the space provided.

Important: **Important: With your mobile device, you can scan the QR code on the serial number decal (if equipped) to access warranty, parts, and other product information.**

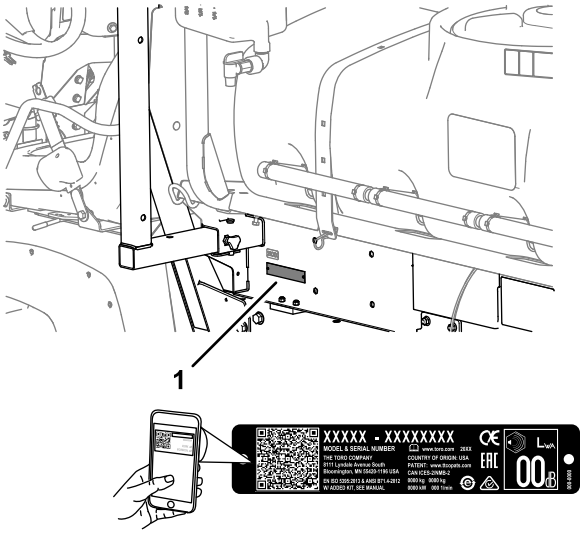

g238191

Figure 1

1. Location of the model and serial numbers

Model No. _____

Serial No. _____

This manual identifies potential hazards and has safety messages identified by the safety-alert symbol (Figure 2), which signals a hazard that may cause serious injury or death if you do not follow the recommended precautions.

g000502

Figure 2

1. Safety-alert symbol

This manual uses 2 words to highlight information. **Important** calls attention to special mechanical information and **Note** emphasizes general information worthy of special attention.

© 2026—The Toro® Company
8111 Lyndale Avenue South
Bloomington, MN 55420

Contact us at www.Toro.com.
Printed in the USA
All Rights Reserved

Contents

Safety 4
General Safety 4
Safety and Instructional Decals 5
Setup 9
1 Removing the Existing Bed 11
2 Preparing to Install the Tank Skid 12
3 Installing the Hold-Down Brackets for the Tank Skid 13
4 Installing the Tank Skid 13
5 Assembling the Drain Valve 15
6 Disconnecting the Battery 16
7 Connecting the Speed Sensor Harness 17
8 Coupling the Sprayer Pump 18
9 Installing the Control Console to the Machine 18
10 Installing the Electrical Harnesses for the Sprayer 19
11 Installing the Sprayer Fuse Block 20
12 Connecting the Sprayer Harness to the Battery 22
13 Lowering the Tank Skid 25
14 Installing the Center Boom Section 26
15 Installing the Left and Right Boom Section 27
16 Installing the Boom Hoses 29
17 Installing the Nozzles 31
18 Installing the Freshwater Tank 31
19 Installing the Anti-Siphon Fill Receptacle 33
20 Storing the Jack Stands 34
Product Overview 35
Controls 35
Specifications 38
Attachments/Accessories 38
Before Operation 38
Before Operation Safety 38
Using the InfoCenter 39
Performing Pre-Starting Checks 49
Preparing the Sprayer 49
Calibrating the Sprayer 53
Calibrating the Sprayer Speed 54
Calibrating the Section-Bypass Valves 55
Adjusting the Agitation and Master Bypass Valves 56
Locating the Spray Pump 57
During Operation 57
During Operation Safety 57
Operating the Sprayer 59
Spraying 59
Turf Care Precautions while Operating in Stationary Modes 60
Positioning the Spray Sections 60
Spraying Tips 61
Unclogging a Nozzle 62
After Operation 62
After Operation Safety 62
Cleaning the Sprayer System 62
Cleaning the Suction Filter 63
Cleaning the Pressure Filter 64
Cleaning the Nozzle Filter 65
Conditioning the Spray System 65
Transporting or Towing the Machine 66
Maintenance 67
Maintenance Safety 67
Recommended Maintenance Schedule(s) 68
Daily Maintenance Checklist 69
Notation for Areas of Concern 69
Pre-Maintenance Procedures 70
Accessing the Machine 70
Lubrication 71
Greasing the Sprayer Pump 71
Greasing the Boom Hinges 72
Electrical System Maintenance 72
Electrical System Safety 72
Replacing the Fuses 72
Spray System Maintenance 73
Inspecting the Hoses 73
Changing the Suction Filter 73
Changing the Pressure Filter 73
Changing the Nozzle Filter 74
Inspecting the Sprayer Pump 75
Inspecting the Nylon Pivot Bushings 75
Adjusting the Booms to Level 76
Cleaning 77
Cleaning the Flow Meter 77
Cleaning the Sprayer Valves 78
Storage 89
Storage Safety 89
Preparing the Machine for Storage 89
Long-Term Storage 90
Preparing the Machine for Service 91
Removing the Sprayer and Tank Skid 91
Troubleshooting 94
Schematics 95

Safety

Improper use or maintenance by the operator or owner can result in injury. To reduce the potential for injury, comply with these safety instructions and always pay attention to the safety-alert symbol (Figure 2), which means Caution, Warning, or Danger—personal safety instruction. Failure to comply with the instruction may result in personal injury or death.

General Safety

This product is capable of causing personal injury. Always follow all safety instructions to avoid serious personal injury.

- Read and understand the contents of this *Operator's Manual* before starting the engine.
- Use your full attention while operating the machine. Do not engage in any activity that causes distractions; otherwise, injury or property damage may occur.
- Use appropriate personal protective equipment (PPE) to guard against contact with chemicals. Chemical substances used in the sprayer system may be hazardous and toxic.
- Do not put your hands or feet near moving components of the machine.
- Do not operate the machine without all guards and other safety protective devices in place and working on the machine.
- Keep clear of any discharge area of the sprayer nozzles and spray drift. Keep bystanders and children out of the operating area.
- Never allow children to operate the machine.
- Park the machine on a level surface, engage the parking brake, shut off the engine, remove the key (if equipped), and wait for all movement to stop before you leave the operator's position. Allow the machine to cool before adjusting, servicing, cleaning, or storing it.

Improperly using or maintaining this machine can result in injury. To reduce the potential for injury, comply with these safety instructions and always pay attention to the safety-alert symbol ⚠, which means Caution, Warning, or Danger—personal safety instruction. Failure to comply with these instructions may result in personal injury or death.

Not all the attachments that adapt to this machine are covered in this manual. Refer to the operator's manual provided with each attachment for additional safety instructions.

Safety and Instructional Decals

Safety decals and instructions are easily visible to the operator and are located near any area of potential danger. Replace any decal that is damaged or missing.

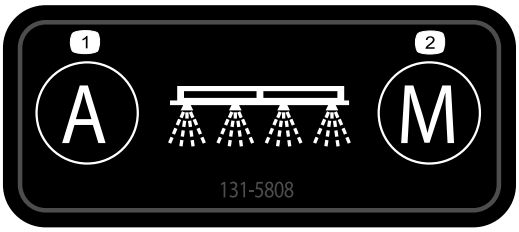

decal131-5808

131-5808

1. Automatic—closed loop-rate control
2. Manual—open loop-rate control

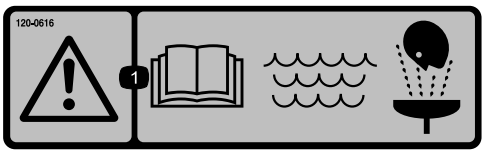

decal120-0616

120–0616

1. Warning—read the *Operator's Manual*; use fresh, clean water for first-aid washing.

decal120-0622

120–0622

1. Warning—read the *Operator's Manual*.
2. Warning—do not enter the sprayer tank.
3. Chemical burn hazard; toxic gas inhalation hazard—wear hand and skin protection; wear eye and respiratory protection.

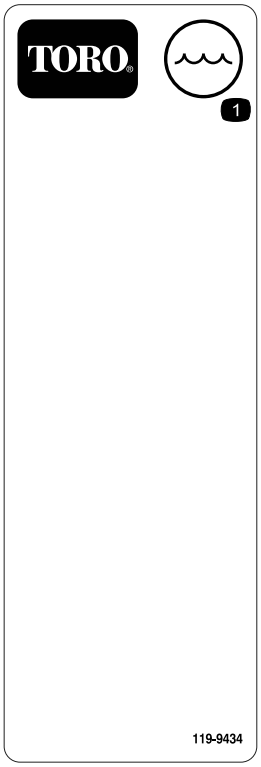

decal119-9434

119-9434

1. Tank contents

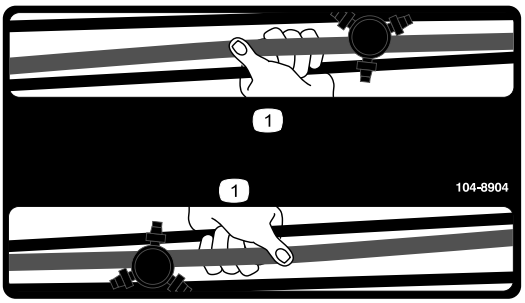

decal104-8904

104-8904

1. Grasp the boom here.

decal127-6976

127-6976

1. Decrease
2. Increase

decal120-0617

120–0617

1. Severing hazard of hand, pinching point—keep away from actuated joints.
2. Crushing hazard—keep bystanders away from the machine.

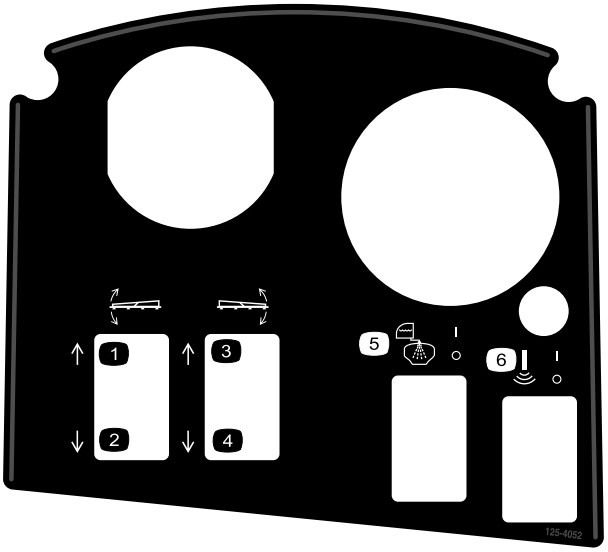

decal125-4052

125–4052

1. Raise left boom
2. Lower left boom
3. Raise right boom
4. Lower right boom
5. Toggle tank rinse on/off
6. Toggle sonic boom on/off

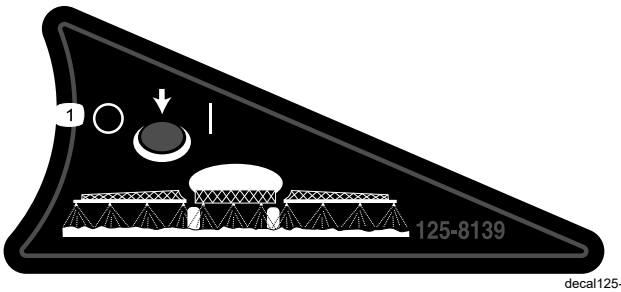

decal125-8139

125–8139

1. Toggle boom sprayers on/off

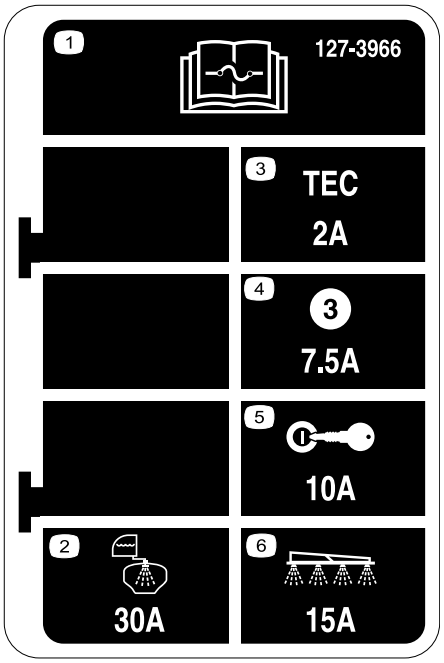

decal127-3966

127–3966

1. Read the *Operator's Manual* for information on fuses.
2. 30 A—Tank rinse
3. 2 A—TEC controller logic
4. 7.5 A—TEC controller output
5. 10 A—Ignition
6. 15 A—Sprayer boom

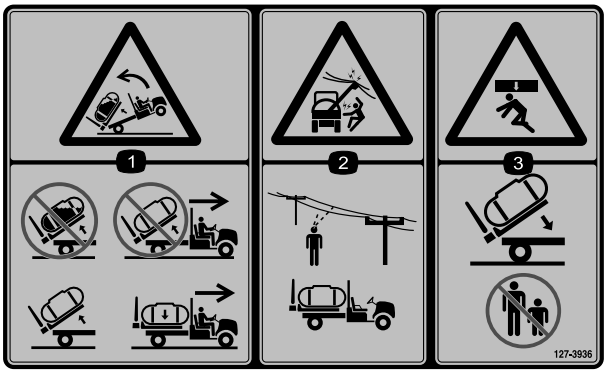

decal127-3936

127–3936

1. Backward tipping hazard—do not raise a full tank; do not move the machine with a raised tank; only raise and empty tank; only move the machine with a lowered tank.
2. Electrical shock hazard, overhead power lines—check the area for overhead power lines before operating the machine in the area.
3. Crushing hazard—keep bystanders away when lowering the tank.

decal127-3937

127–3937

1. Warning—do not step.
2. Warning—keep away from hot surfaces.
3. Entanglement hazard, belt—keep away from moving parts; keep all guards and shields in place.

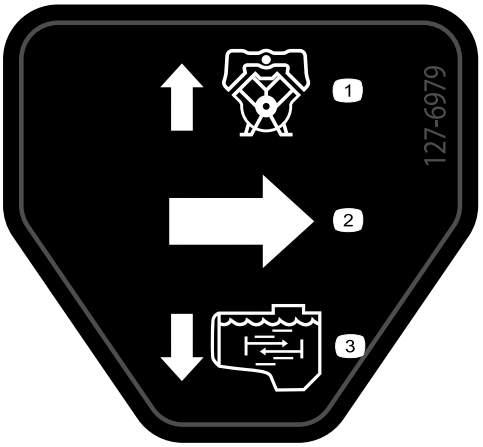

decal127-6979

127-6979

1. Bypass-return flow
2. Flow
3. Agitation flow

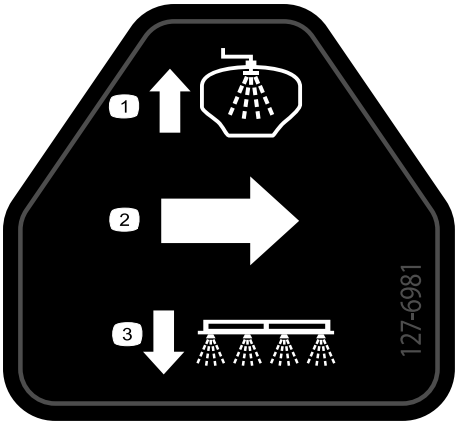

decal127-6981

127-6981

1. Bypass-return flow
2. Flow
3. Boom spray

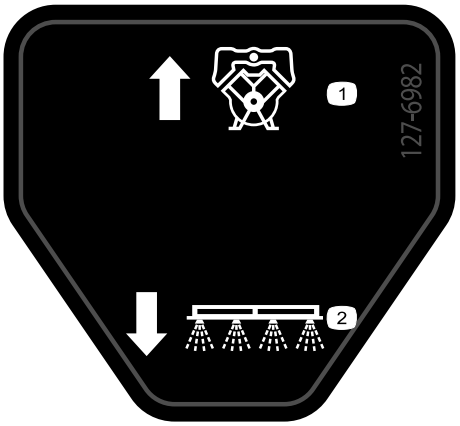

decal127-6982

127-6982

1. Bypass-return flow
2. Boom spray

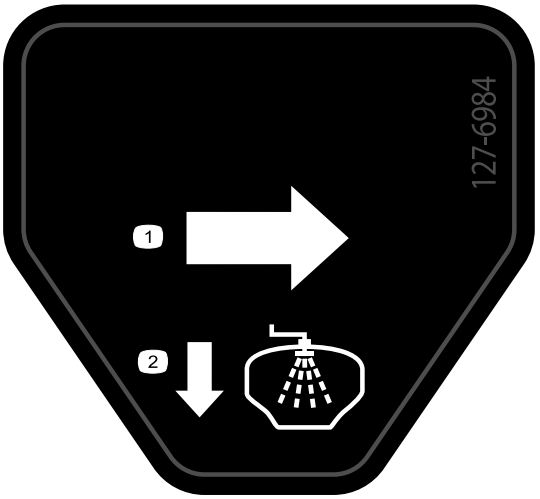

decal127-6984

127-6984

1. Flow
2. Tank-return flow

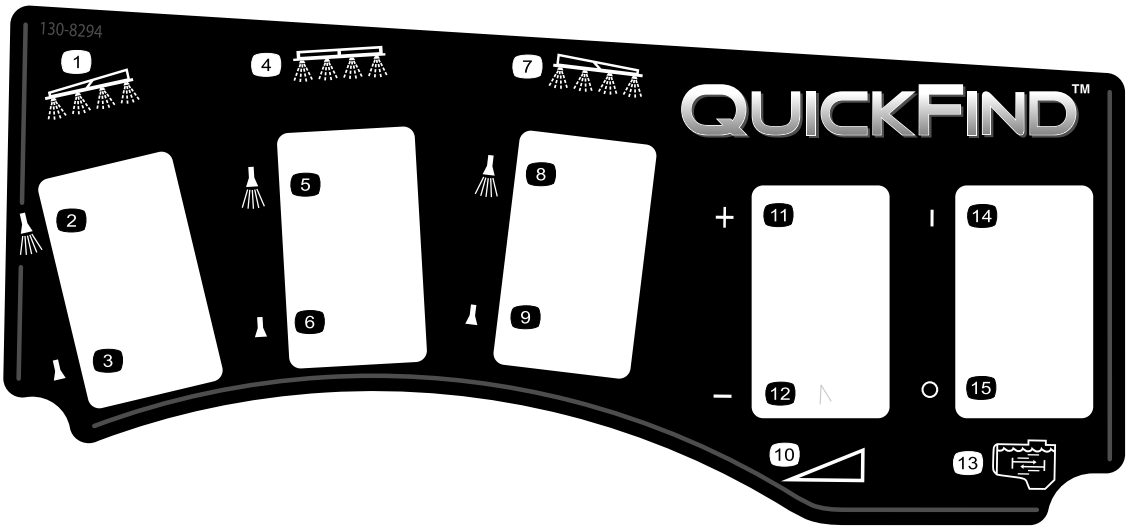

decal130-8294

130-8294

1. Left boom
2. Left boom spray on
3. Left boom spray off
4. Center boom
5. Center boom spray on
6. Center boom spray off
7. Right boom
8. Right boom spray on
9. Right boom spray off
10. Speed
11. Increase speed
12. Decrease speed
13. Agitation
14. Agitation on
15. Agitation off

Setup

Loose Parts

Use the chart below to verify that all parts have been shipped.

Procedure	Description	Qty.	Use
1	No parts required	–	Remove the existing bed.
2	Rear PTO Kit, Heavy-Duty Workman Vehicle (HD-Series Models with a Manual Transmission) High-Flow Hydraulics Kit, Workman HDX-Auto Utility Vehicle (Non-TC—HDX-Auto Model) Multi Pro WM Turf Sprayer Finishing Kit, Manual Workman Utility Vehicle (HD-Series Models with a Manual Transmission) Multi Pro WM Turf Sprayer Finishing Kit, Automatic Workman Utility Vehicle (HDX-Auto Model)	1 1 1 1	Prepare to install the center boom section.
3	Hold-down brackets	2	Install the attachment hold-down brackets.
4	Tank and skid assembly Clevis pins Tapered clevis pin Hairpins Lynch pins Bolt (1/2 x 1-1/2 inches) Nuts (1/2 inch)	1 2 2 2 4 2 2	Install the tank skid.
5	No parts required	–	Assemble the drain valve.
6	No parts required	–	Disconnect the battery.
7	No parts required	–	Connect the speed sensor harness.
8	No parts required	–	Couple the sprayer pump.
9	Console mounting bracket Flange locknut (5/16 inch) Flange-head bolt (5/16 inch) Plastic bushing Control console Spring-clip pin Hand knob	1 3 3 2 1 1 1	Install the control console to the machine.
10	J-clips Bolt (1/4 x 3/4 inch) Flange nut (1/4 inch)	3 1 1	Install the control console onto the machine.
11	Fuse decal (127–3966)	1	Install the control console and the electrical harness.

Procedure	Description	Qty.	Use
12	Battery terminal bolt Clamp nut Cover—wide (battery terminal—red)	2 2 1	Connect the sprayer harness to the battery.
13	Bolt (1/2 x 1-1/2 inch) Locknut (1/2 inch)	2 2	Lower the tank skid.
14	Center-boom assembly Bolt (3/8 x 1 inch) Flange locknut (3/8 inch) Boom-transport cradle Bolt (1/2 x 1-1/4 inches) Flange nut (1/2 inch)	1 10 10 2 4 4	Install the boom section.
15	Left boom section Right boom section Flange-head bolts (3/8 x 1-1/4 inches) Backing plates Flange locknuts (3/8 inch) Clevis pin Hairpin	1 1 8 8 8 2 2	Install the left and right boom sections.
16	Hose clamps R-clamp Shoulder bolt Washer Nut	3 2 2 2 2	Install the boom hoses.
18	Freshwater tank 90° elbow (3/4 inch NPT) 90° spigot Freshwater-tank mount Mount strap Flange-head bolt (5/16 x 5/8 inch) Flange locknut (5/16 inch) Support tube (freshwater tank) Jam nut (5/16 inch) Bolt (5/16 x 1 inch) Shoulder bolt (1/2 x 1-15/16 inches) Bolt (5/16 x 2-1/4 inches) Washer (5/16 inch)	1 1 1 1 4 4 10 1 1 1 2 2 2	Install the freshwater tank.
19	Fill receptacle assembly Flange-head bolt (5/16 x 3/4 inch)	1 1	Install the anti-siphon fill receptacle.
20	Front jack stand Rear jack stand Cotter pin Clevis pin (4-1/2 inches) Clevis pin (3 inches) Knob	2 2 4 2 2 2	Store the jack stands (optional).

Media and Additional Parts

Description	Qty.	Use
Operator's Manual	1	Read the manuals before operating the machine.
Parts Catalog Instruction Card	1	
Screen filter	2	

Note: Determine the left and right sides of the machine from the normal operating position.

Note: If you have questions or need additional information regarding the spray control system, refer to the *Operator's Manual* supplied with the system.

Important: **This sprayer is sold without spray nozzles.**

To use the sprayer, *you must obtain and install the nozzles*. Contact your authorized Toro distributor for information on the available section kit and accessories.

After you install your nozzles and before using the sprayer for the first time, adjust the section bypass valves so that the pressure and application rate remains the same for all sections when you turn 1 or more sections off. Refer to Calibrating the Sprayer Flow (page 53).

Important: **The Multi-Pro WM turf sprayer requires a 4-post ROPS or cab installed with the Workman vehicle.**

1

Removing the Existing Bed

No Parts Required

Procedure

⚠ CAUTION

The full bed weighs approximately 95 kg (210 lb). You can injure yourself if you remove the bed without aid.

- **Do not try to install or remove the bed by yourself.**
- **Get the help of 2 or 3 other people or use an overhead crane.**

1. Park the machine on a level surface, engage the parking brake, and start the engine.
2. Move the hydraulic lift lever forward and lower the bed until the clevis pins for the cylinder rod end lift cylinders are loose in the mounting slots of the bed mounting plates.
3. Release the hydraulic lift lever, set the hydraulic lift lock lever, shut off the engine, and remove the key; refer to the *Operator's Manual* of your machine.
4. Remove the lynch pins from the outer ends of the cylinder rod clevis pins (Figure 3).

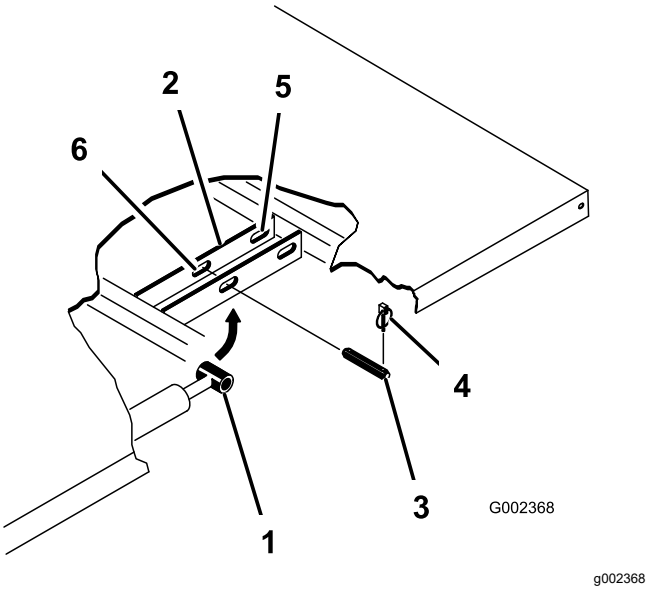

Figure 3

1. Cylinder rod end
2. Bed mounting plate
3. Clevis pin
4. Lynch pin
5. Rear slots (full bed)
6. Front slots (2/3 bed)

5. Remove the clevis pins securing the cylinder rod ends to the bed mounting plates by pushing the pins toward the centerline of the machine (Figure 3).
6. Remove the lynch pins and clevis pins securing the pivot brackets of the bed to the frame channels of the machine (Figure 4).

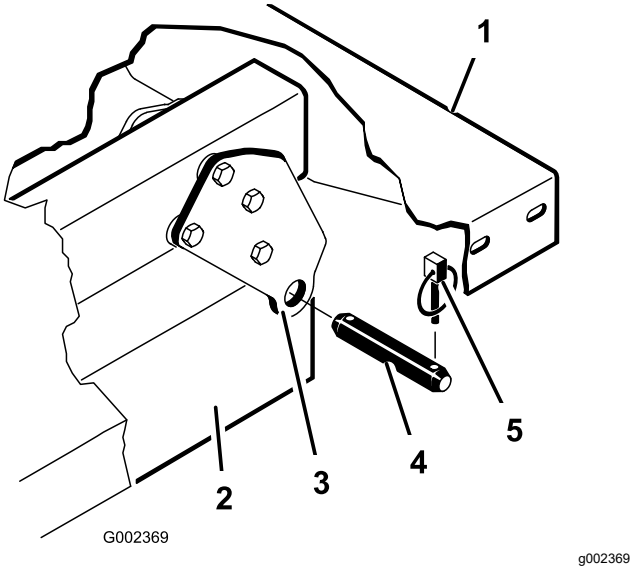

Figure 4

1. Left, rear corner of bed
2. Vehicle frame channel
3. Pivot plate
4. Clevis pin
5. Lynch pin

7. Lift the bed off the vehicle.
8. Stow the lift cylinders in storage clips.

2

Preparing to Install the Tank Skid

Parts needed for this procedure:

1	Rear PTO Kit, Heavy-Duty Workman Vehicle (HD-Series Models with a Manual Transmission)
1	High-Flow Hydraulics Kit, Workman HDX-Auto Utility Vehicle (Non-TC—HDX-Auto Model)
1	Multi Pro WM Turf Sprayer Finishing Kit, Manual Workman Utility Vehicle (HD-Series Models with a Manual Transmission)
1	Multi Pro WM Turf Sprayer Finishing Kit, Automatic Workman Utility Vehicle (HDX-Auto Model)

Installing the Rear PTO Kit for Heavy Duty Workman Vehicles (HD-Series Models with a Manual Transmission)

For HD- and HDX-Series Workman models with a manual transmission, fully install the Rear PTO Kit for Heavy-Duty Workman Vehicles; refer to the *Installation Instructions* for the Rear PTO Kit for Heavy Duty Workman Vehicles.

High-Flow Hydraulics Kit, Workman HDX-Auto Utility Vehicle (Non-TC—HDX-Auto Model)

Fully install the High-Flow Hydraulics Kit for Workman HDX-Auto Utility Vehicles; refer to the *Installation Instructions* for the High-Flow Hydraulics Kit, Workman HDX-Auto Utility Vehicle.

Lifting the Sprayer Skid

Using lifting equipment with a 408 kg (900 lb) lift capacity, lift the tank skid from the shipping crate at the 2 front and 2 rear lift points (Figure 5).

Note: Ensure that the tank skid is raised high enough to install the jack stands.

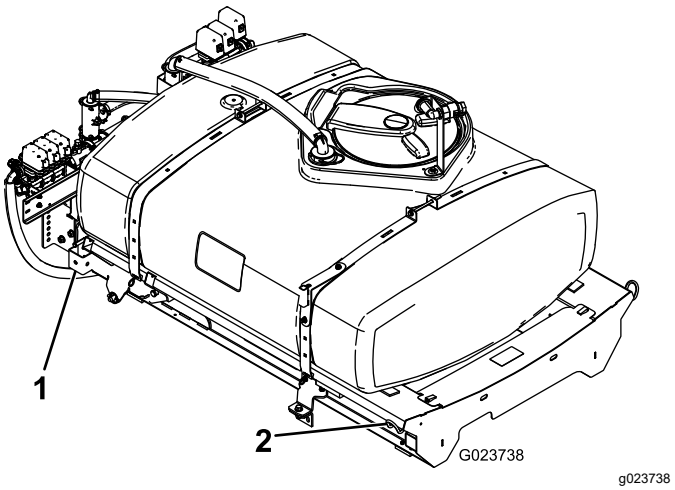

Figure 5

1. Rear lift point
2. Front lift point

Multi Pro Workman Turf Sprayer Finishing Kit (HD-Series Models with a Manual Transmission)

For HD- and HDX-Series Workman models with a manual transmission, complete the steps in the Multi Pro WM Turf Sprayer Finishing Kit for Manual Workman Utility Vehicles; refer to the Installation Instructions for the Multi Pro WM Turf Sprayer Finishing Kit, Manual Workman Utility Vehicle.

Multi Pro Workman Turf Sprayer Finishing Kit (HDX-Auto Model)

HDX-Automatic Series Workman models, complete the steps in the Multi Pro WM Turf Sprayer Finishing Kit for Automatic Workman Utility Vehicles; refer to the Installation Instructions for the Multi Pro WM Turf Sprayer Finishing Kit, Automatic Workman Utility Vehicle.

3

Installing the Hold-Down Brackets for the Tank Skid

Parts needed for this procedure:

2	Hold-down brackets

Procedure

1. Remove the 2 rear flange-head bolts and 2 flange locknuts that secure the support bracket for the engine tube to the frame of the machine (Figure 6).

   Note: Retain the fasteners for later use.

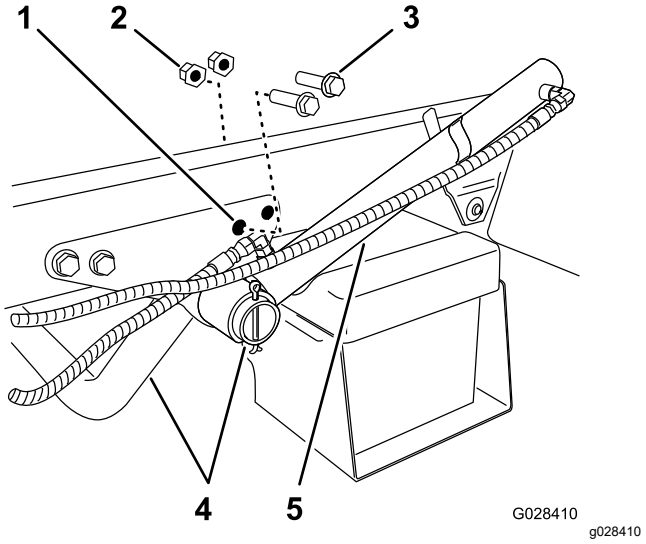

Figure 6

1. Rear hole—support bracket (engine tube)
2. Flange locknut
3. Flange-head bolt
4. Engine support tube
5. Lift cylinder

2. Rotate the lift cylinder to provide clearance to install the hold-down bracket for the tank skid (Figure 6).

3. Assemble the hold-down brackets to support bracket and frame the using the 2 flange-head bolts and flange locknuts removed in step 1 (Figure 7).

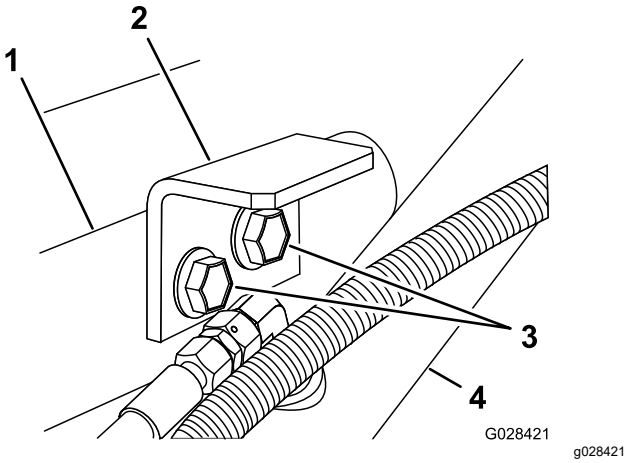

Figure 7

1. Support bracket (engine tube)
2. Hold-down bracket (tank skid)
3. Flanged-head bolts
4. Lift cylinder

4. Torque the bolts and nuts to 91 to 113 N·m (67 to 83 ft-lb).

5. Repeat steps 1 to 4 at the opposite side of the machine.

4

Installing the Tank Skid

Parts needed for this procedure:

1	Tank and skid assembly
2	Clevis pins
2	Tapered clevis pin
2	Hairpins
4	Lynch pins
2	Bolt (1/2 x 1-1/2 inches)
2	Nuts (1/2 inch)

Procedure

⚠ DANGER

The sprayer tank assembly represents a stored energy hazard. If not properly retained when installing or removing the assembly, it can move or fall and injure you or other bystanders.

Use straps and an overhead lift to support the sprayer tank assembly during installation, removal, or any maintenance whenever you remove retaining fasteners.

1. Using a lift, raise the tank skid assembly (Figure 8) and position it over the vehicle frame with the pump and valve assemblies facing rearward.

   Note: Have another person help you perform the following steps.

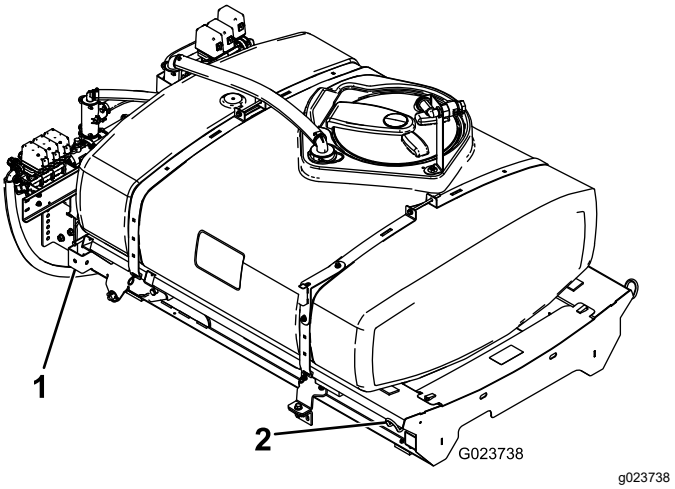

Figure 8

1. Rear lift point
2. Front lift point

2. Slowly lower the tank skid onto the frame of the machine.
3. Extend the lift cylinders to the brackets on the tank skid, and align the cylinder fittings with the holes in the tank skid brackets (Figure 9).

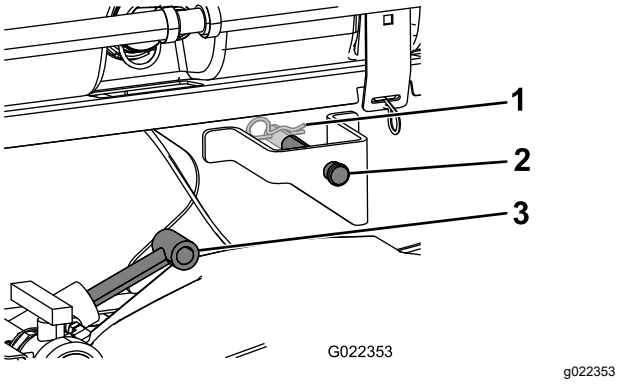

Figure 9

1. Hairpin
2. Clevis pin
3. Lift cylinders

4. Secure the tank skid to the lift cylinders with the clevis pins and hairpins at both sides of the machine.
5. Line up the holes in the pivot lugs at the rear of the tank skid assembly with the holes in the bed pivot tube at the end of the vehicle frame (Figure 10).

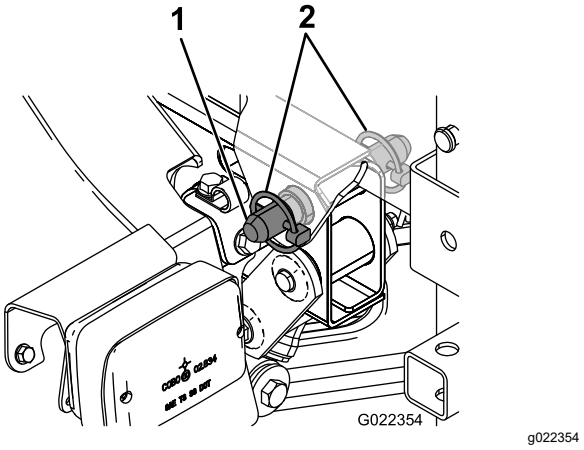

Figure 10

1. Tapered clevis pin
2. Lynch pin

6. Install a tapered clevis pin and 2 lynch pins to the pivot lug to secure the tank assembly to the frame (Figure 10).
7. Extend the lift cylinders to raise the tank and support its weight.

   Note: Disconnect the tank assembly from the lifting equipment.
8. Remove the bed support from the storage brackets on back of the ROPS panel (Figure 11).

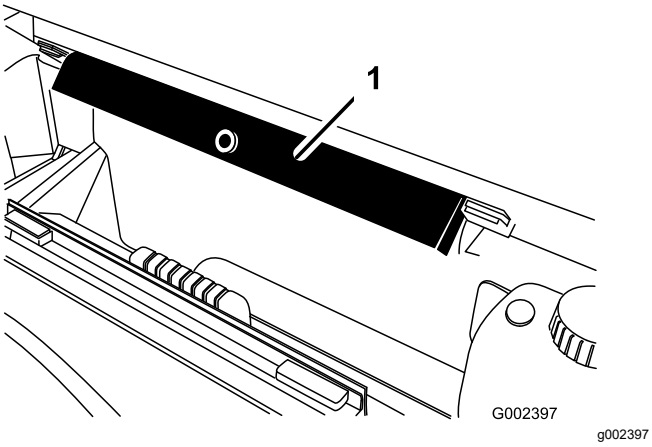

Figure 11

1. Bed support

9. Push the bed support onto the cylinder rod, making sure that the support end tabs rest on the end of cylinder barrel and on the cylinder rod end (Figure 12).

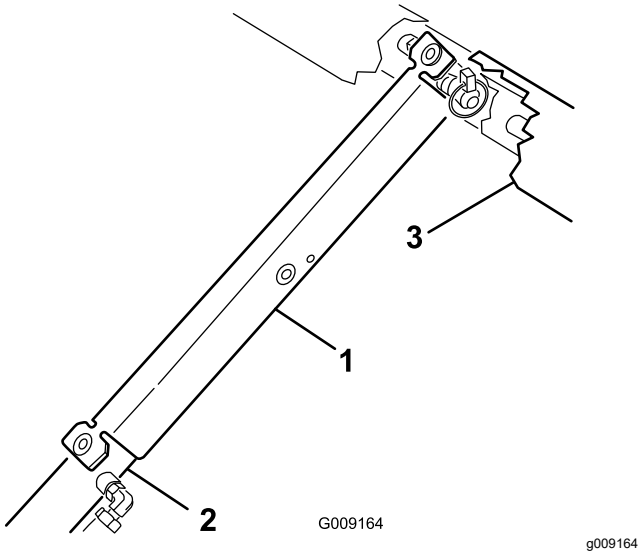

Figure 12

1. Bed support
2. Lift cylinder
3. Skid frame

5

Assembling the Drain Valve

No Parts Required

Procedure

1. Remove the cable tie that secures the drain valve and hose for the sprayer tank to the skid channel (Figure 13).

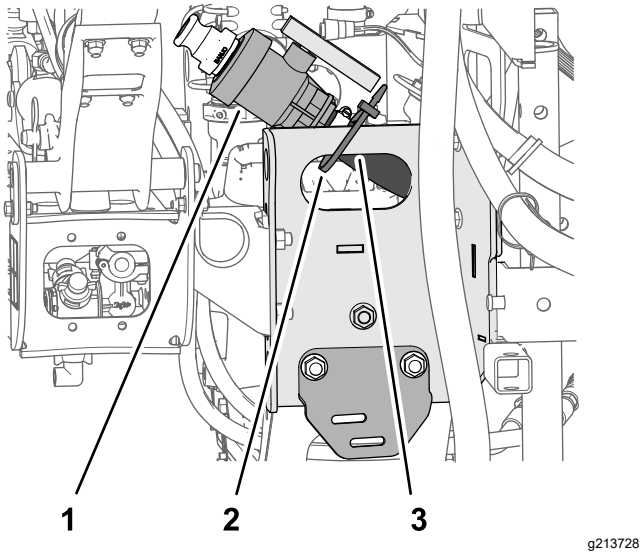

Figure 13

1. Drain valve
2. Cable tie
3. Skid channel

2. Move the drain valve and hose outboard of the skid channel (Figure 14A).

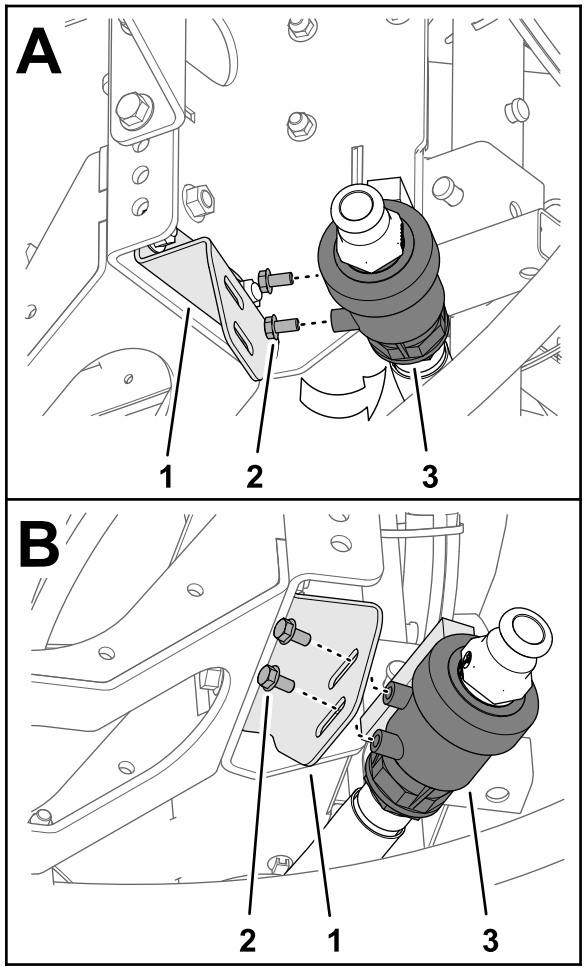

g213726

Figure 14

1. Drain valve
2. Flange-head bolt (5/16 x 5/8 inch)
3. Drain-valve bracket

3. Remove the 2 flange-head bolt (5/16 x 5/8 inch) from the case of the drain valve (Figure 14).
4. Assemble the drain valve to the drain-valve bracket (Figure 14B) with the 2 flange-head bolts (5/16 x 5/8 inch) that you removed in step 3.
5. Tighten 2 flanged-head bolts by hand (Figure 14B).

6

Disconnecting the Battery

No Parts Required

Procedure

⚠ WARNING

Incorrect battery cable routing could damage the sprayer and cables causing sparks. Sparks can cause the battery gasses to explode, resulting in personal injury.

- **Always disconnect the negative (black) battery cable before disconnecting the positive (red) cable.**
- **Always connect the positive (red) battery cable before connecting the negative (black) cable.**

⚠ WARNING

Battery terminals or metal tools could short against metal sprayer components causing sparks. Sparks can cause the battery gasses to explode, resulting in personal injury.

- **When removing or installing the battery, do not allow the battery terminals to touch any metal parts of the sprayer.**
- **Do not allow metal tools to short between the battery terminals and metal parts of the sprayer.**

1. Squeeze the sides of the battery cover to release the tabs from the slots in the battery base, and remove the battery cover from the battery base (Figure 15).

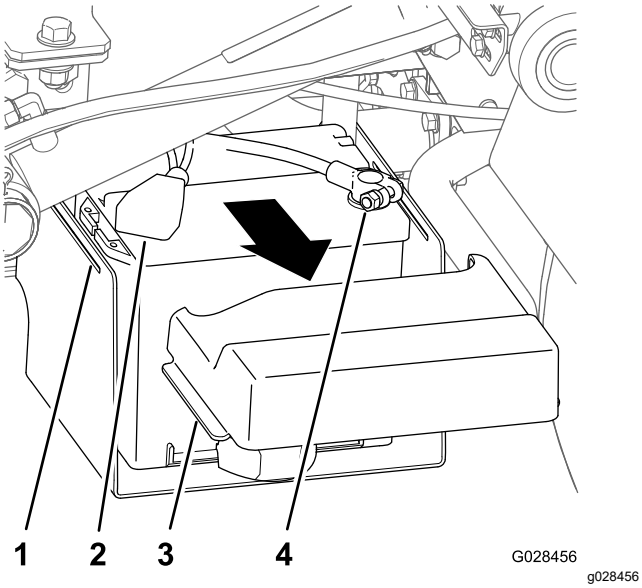

Figure 15

1. Slot (battery base)
2. Cover (positive battery terminal)
3. Tab (battery cover)
4. Terminal (negative battery cable)

2. Slide the cover back and remove the negative battery terminal from the battery (Figure 15).
3. Remove the positive battery terminal from the battery (Figure 15).

7

Connecting the Speed Sensor Harness

No Parts Required

Connecting the Speed Sensor Harness (HD-Series Models with a Manual Transmission)

1. At the wire harness for the sprayer, locate the 3-socket connector for the speed sensor circuit and the 3-pin connector for the vehicle circuit.
2. At the transaxle of the machine, connect the 3-pin connector of the wire harness of the machine for speed sensor into the 3-socket connector of the sprayer harness for the speed sensor (Figure 16).

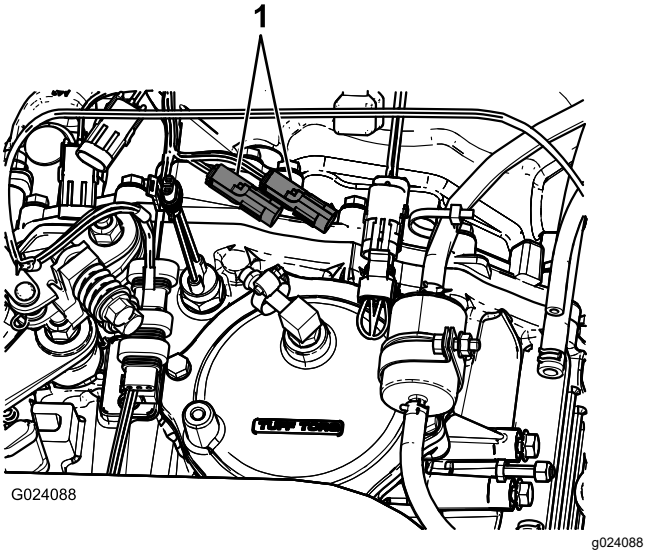

Figure 16

1. Existing speed sensor plugs

3. Connect the 3-pin connector for the vehicle circuit of the wire harness of the sprayer into the 3-pin socket for the vehicle circuit of the wire harness for the machine.

Connecting the Speed Sensor Harness (HDX-Auto Model)

1. At the wire harness for the sprayer, locate the 3-socket connector for the speed sensor circuit (Figure 17).

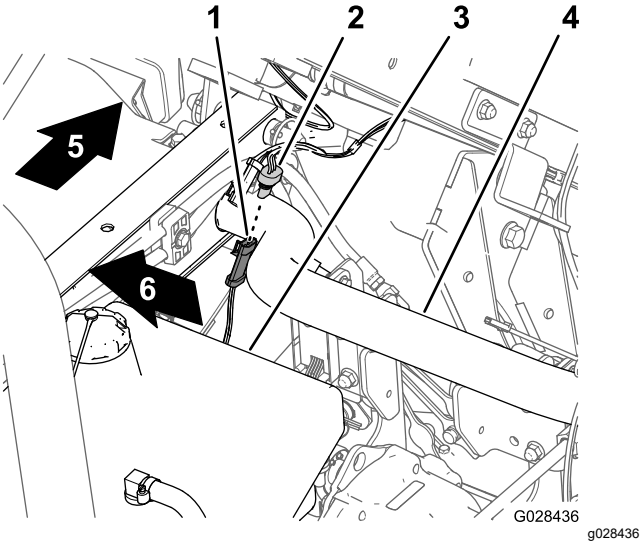

Figure 17

1. 3-pin connector (machine wire harness—speed sensor)
2. 3-socket connector (sprayer wire harness—speed sensor)
3. Hydraulic tank
4. Rear frame tube
5. Back of the machine
6. Right side of the machine

2. Connect the 3-pin connector of the wire harness of the machine for speed sensor into the 3-socket connector of the sprayer harness for the speed sensor (Figure 17).

8

Coupling the Sprayer Pump

No Parts Required

Procedure

- For HD-series models with a manual transmission, couple the PTO shaft to the transaxle PTO; refer to the *Installation Instructions* for the Multi Pro WM Turf Sprayer Finishing Kit, Manual Workman Utility Vehicle.
- For HDX-Auto model—connect the hydraulic motor hoses to the quick-disconnect fittings at the high-flow hydraulic panel; refer to the *Installation Instructions* for the Multi Pro WM Turf Sprayer Finishing Kit, Automatic Workman Utility Vehicle.

9

Installing the Control Console to the Machine

Parts needed for this procedure:

1	Console mounting bracket
3	Flange locknut (5/16 inch)
3	Flange-head bolt (5/16 inch)
2	Plastic bushing
1	Control console
1	Spring-clip pin
1	Hand knob

Installing the Console Mounting Bracket

Note: On some Workman vehicles, the control mount plate is attached to the dashboard at the same location where the bracket for the optional hand throttle kit is mounted. If the hand throttle kit is installed, you need to remove the bracket of the hand throttle assembly from the dashboard, align the control mount plate to the dash, and install the hand throttle bracket on top of the control mount plate. Refer to the Hand Throttle Kit *Installation Instructions* for directions on removing and installing the hand throttle assembly.

1. Remove the 3 bolts and 3 nuts that secure the lower-center portion of the dash panel to the dash support bracket (Figure 18).

   Note: Some older Workman machines may use 4 bolts and flange nuts.

   Note: Discard the bolts and nuts.

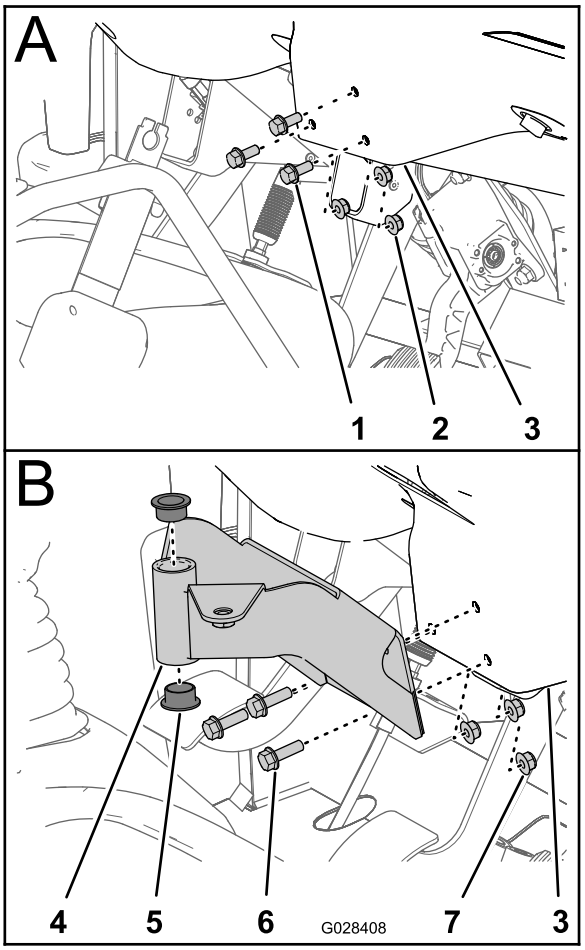

g028408

Figure 18

1. Bolt
2. Nut
3. Cash panel (lower center area)
4. Mounting bracket (control console)
5. Bushing (plastic)
6. Flange-head bolts (5/16 x 1 inch)
7. Flange locknuts (5/16 inch)

2. Align the holes in the mounting bracket for the control console with the holes in the dash and support bracket (Figure 18).
3. Assemble the mounting bracket dash panel and support bracket with the 3 flange-head bolts (5/16 x 1 inch) and 3 flange locknuts (5/16 inch).
4. Torque the nuts and bolts to (Figure 18).

5. Insert the 2 plastic bushings into the mounting bracket (Figure 18).

Installing the Control Console to the Machine

1. Remove the hairpin securing the pivot pin of the control console to the storage bracket on the sprayer tank.
2. Install the control console onto the control mounting bracket and secure the control console with the spring-clip pin (Figure 19).

   Note: Ensure that the spring clip is rotated over the pivot pin to positively secure the spring-clip pin.

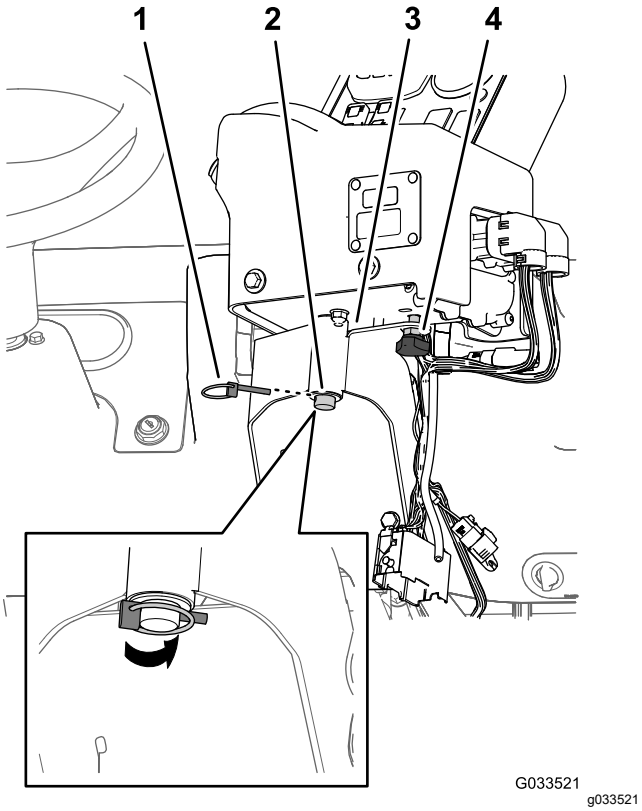

Figure 19

1. Spring-clip pin
2. Pivot pin (control console)
3. Control mounting bracket
4. Hand knob

3. Install the hand knob and tighten it to prevent the console from rotating during operation (Figure 19).

10

Installing the Electrical Harnesses for the Sprayer

Parts needed for this procedure:

3	J-clips
1	Bolt (1/4 x 3/4 inch)
1	Flange nut (1/4 inch)

Routing the Rear Electrical Harness for the Sprayer to the Control Console

1. Install 2 J-clips in the center console at the points located in Figure 20 or Figure 21 using the existing screws.

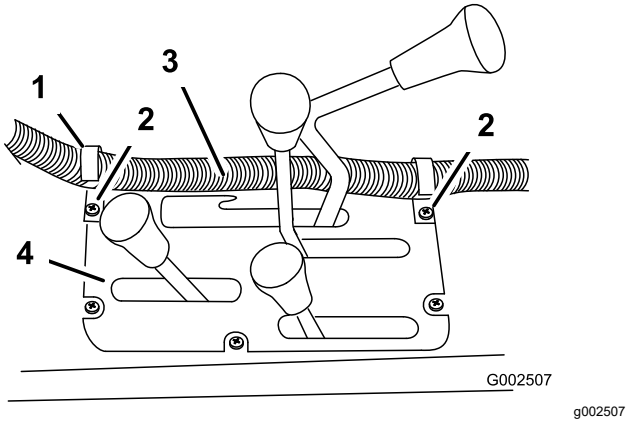

Figure 20

HD-Series models with a manual transmission

1. J-clip
2. Existing screws
3. Control-box harness
4. Center console

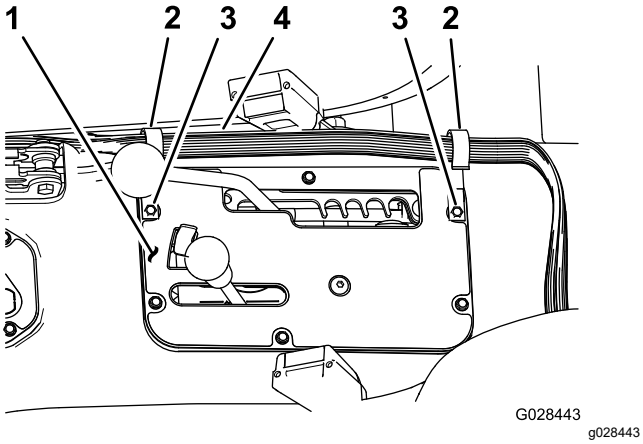

Figure 21

HDX-Auto Model

1. Center console
2. J-clip
3. Existing screws
4. Control-box harness

2. Install a J-clip behind the passenger seat (Figure 22) using a bolt (1/4 x 1/2 inch) and a flanged nut (1/4 inch).

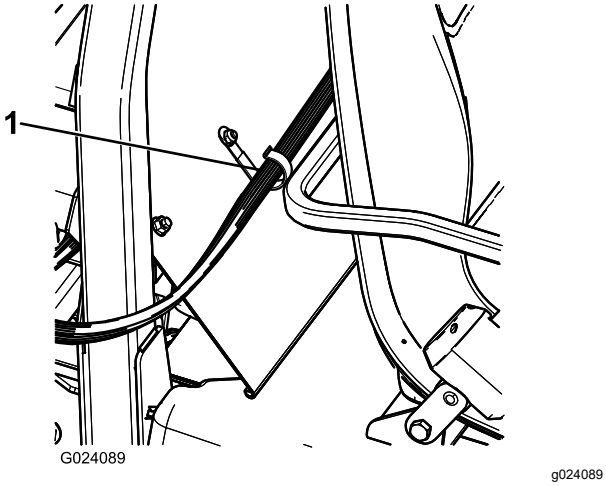

Figure 22

1. J-clip

3. Secure the control console harness to the console and ROPS cover using the J-clips (Figure 22).

Connecting the Rear Electrical Harness to the Front Electrical Harness at the Control Console

1. Connect the 3-pin connector of the rear wire harness for the sprayer with the 3-socket connector of the front wire harness connected to the control console.

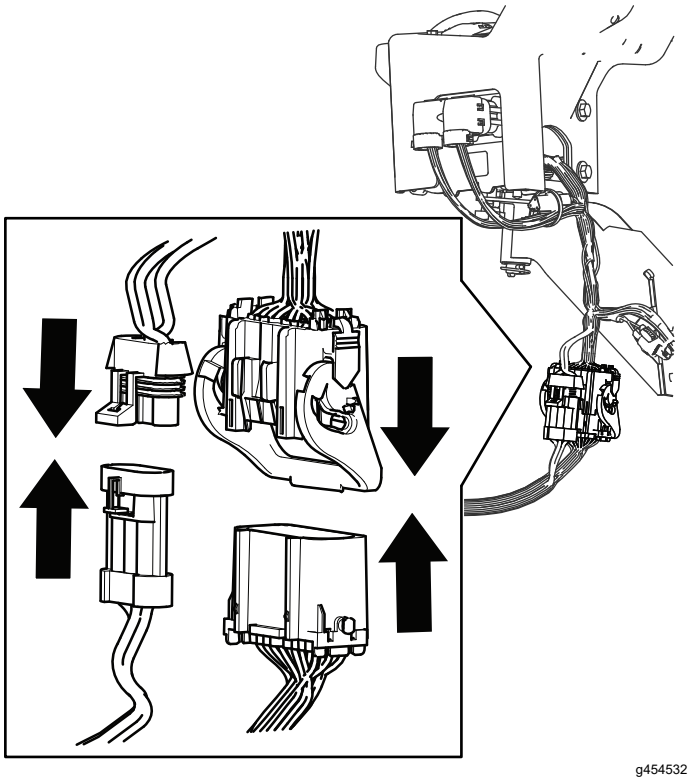

Figure 23

2. Push together the 24-pin connector of the rear wire harness for the sprayer with the 24-socket connector of the front wire harness connected to the control console.
3. Flip over the lever on the 24-pin connector to lock the 2 connectors together.

11

Installing the Sprayer Fuse Block

Parts needed for this procedure:

1	Fuse decal (127–3966)

Procedure

1. At the control console for the sprayer, route the branch of the front wire harness with the fuse blocks between the bottom of the dash panel and the cross tube of the machine chassis and down toward the forward side of the fuse block of the machine (Figure 24).

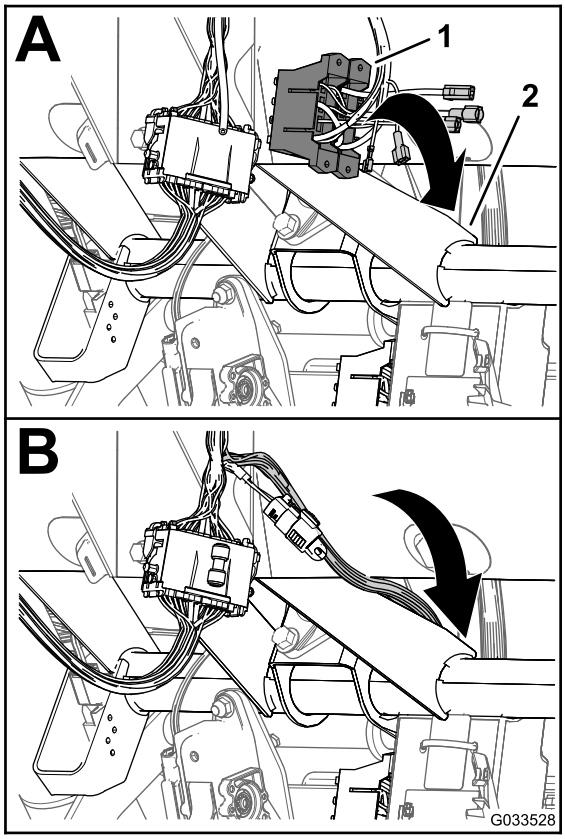

g033528

Figure 24

1. Fuse blocks (front wire harness—control console)
2. Cross tube (machine chassis)

2. Locate the uninsulated receptacle terminal at the end of the open, yellow power wire of the fuse block for the machine and the insulated blade terminal at the end of the yellow, optional power wire of the fuse block of the sprayer wiring (Figure 25).

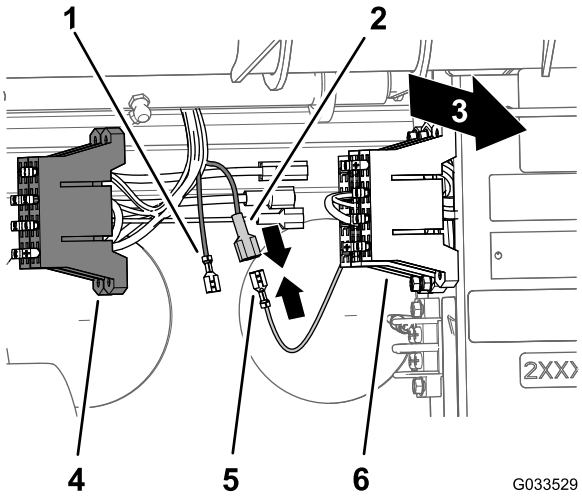

g033529

Figure 25

1. Uninsulated receptacle terminal (yellow, optional-power wire—sprayer fuse block)
2. Insulated blade terminal (yellow, optional-power wire—sprayer fuse block)
3. Back of the machine
4. Fuse block (sprayer wiring)
5. Uninsulated receptacle terminal (yellow power wire—machine fuse block)
6. Fuse block (machine wiring)

3. Connect the uninsulated receptacle terminal of the fuse block for the machine to the insulated blade terminal of the fuse block of the sprayer (Figure 25).
4. Align the T-fittings on the of the fuse block of the sprayer to the T-slots of the fuse block for the machine and slide the sprayer fuse block into the slots until the fuse block is fully seated (Figure 26).

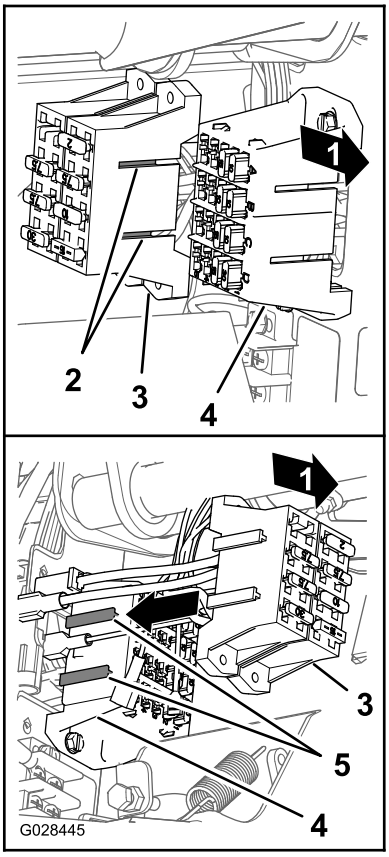

g028445

Figure 26

1. Back of the machine
2. T-fittings (fuse block for the sprayer)
3. Fuse block for the sprayer
4. T-slots (fuse block for the machine)
5. Fuse block of the machine

5. Attach the fuse decal on a surface near the fuse block for the sprayer.

12

Connecting the Sprayer Harness to the Battery

Parts needed for this procedure:

2	Battery terminal bolt
2	Clamp nut
1	Cover—wide (battery terminal—red)

Preparing the Positive Battery Terminal

⚠ WARNING

Incorrect battery cable routing could damage the sprayer and cables, causing sparks. Sparks can cause the battery gasses to explode, resulting in personal injury.

Always *connect* the positive (red) battery cable before connecting the negative (black) cable.

1. Remove the nuts and T-bolts at the clamps of the positive and negative battery cables (Figure 27).

   Note: You no longer need the nuts and T-bolts.

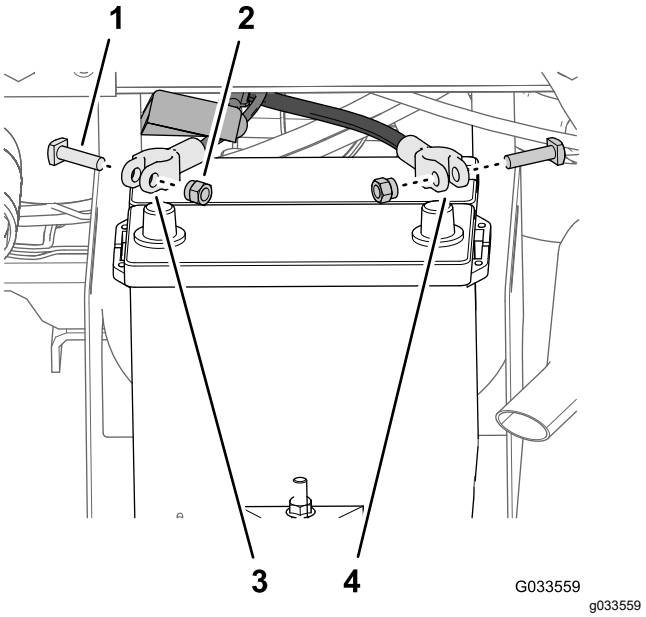

Figure 27

1. T-bolt
2. Nut
3. Positive battery cable (machine)
4. Negative battery cable (machine)

2. Remove the cover (narrow) from the positive battery cable (Figure 28).

   Note: You no longer need the narrow battery cover.

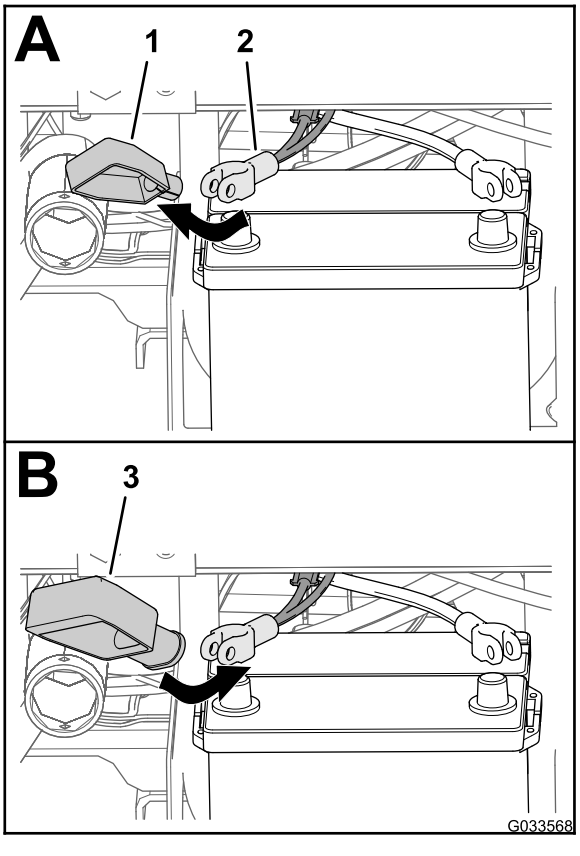

Figure 28

1. Cover–narrow (battery terminal—red)
2. Positive battery cable (machine)
3. Cover–wide (battery terminal—red)

3. Install the wide battery cover over the positive battery cable as shown in Figure 28.

   Note: Slide the cover far enough over the cables to allow access to the post clamp.

4. Align the ring terminal of the fusible link (sprayer wire harness) though the wide battery cover as shown in Figure 29.

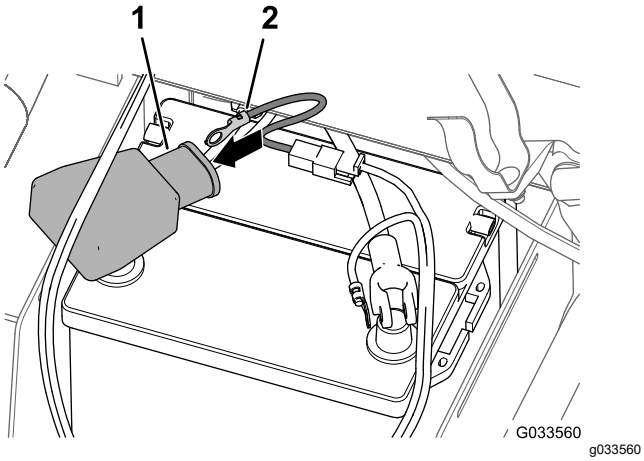

Figure 29

1. Cover–wide (battery terminal—red)
2. Terminal (fusible-link harness—sprayer harness)

5. Loosely assemble a terminal bolt and a clamp nut to the positive and negative battery-cable clamps (Figure 30).

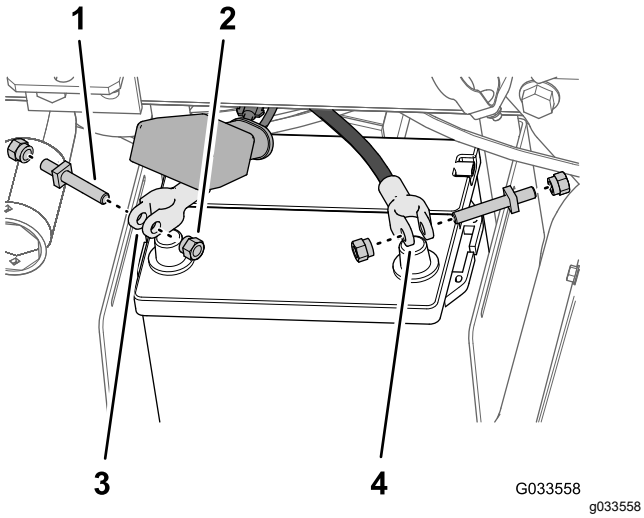

Figure 30

1. Terminal bolt
2. Clamp nut
3. Positive battery-cable clamp
4. Negative battery-cable clamp

6. Secure the ring terminal of the fusible link (sprayer wire harness) to the post of the terminal bolt that you assembled to the positive battery cable with a clamp nut (Figure 31).

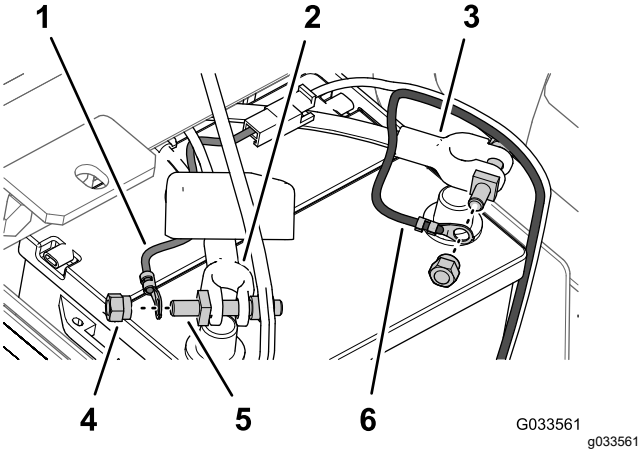

Figure 31

1. Ring terminal (fusible-link harness—sprayer harness)
2. Positive battery cable (machine)
3. Negative battery cable (machine)
4. Clamp nut
5. Terminal bolt
6. Ring terminal (negative battery wire—sprayer wire harness)

7. Secure the ring terminal of the negative wire (black—sprayer wire harness) to the post of the terminal bolt that you assembled to the negative battery cable with a clamp nut (Figure 31).
8. Assemble the positive battery cable onto the **positive** battery post and tighten the clamp nut by hand (Figure 32).

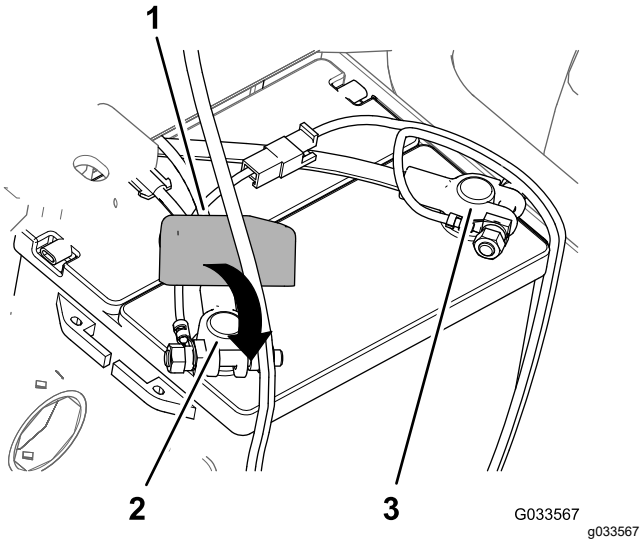

Figure 32

1. Cover–new (battery terminal—red)
2. Positive battery post
3. Negative battery post

9. Assemble the **negative** battery cable onto the negative battery post and tighten the clamp nut by hand.

10. Squeeze the sides of the battery cover, align the tabs of the cover with the slots in the battery base, and release the battery cover (Figure 33).

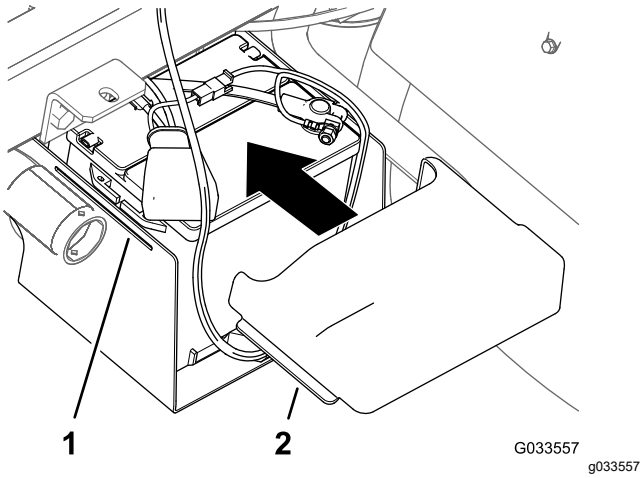

Figure 33

1. Slot (battery base)
2. Tab (battery cover)

13

Lowering the Tank Skid

Parts needed for this procedure:

2	Bolt (1/2 x 1-1/2 inch)
2	Locknut (1/2 inch)

Procedure

1. Start the machine and raise the tank skid slightly with the lift cylinders.
2. Remove the bed support from the lift cylinder and stow the support in the storage brackets at the back of the ROPS panel (Figure 34 and Figure 35).

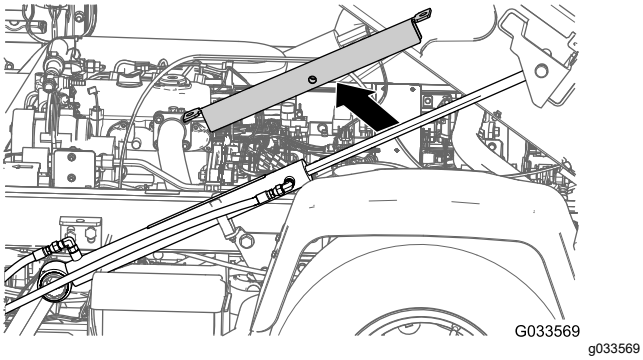

Figure 34

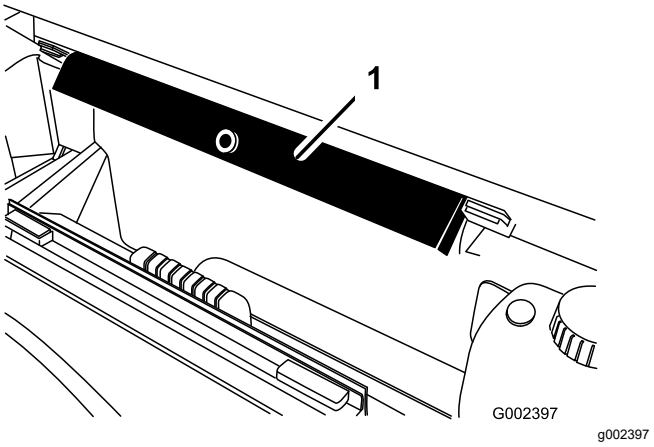

Figure 35

1. Bed support

3. Use lift cylinders to slowly lower the tank to the frame.

   Note: Have another person observe the tank skid as it lowers. Look for hoses and wiring that might become pinched or bent.

4. Check the alignment of the tank skid to the frame of the machine.
5. Remove the access panels at both sides of the skid frame (Figure 36).

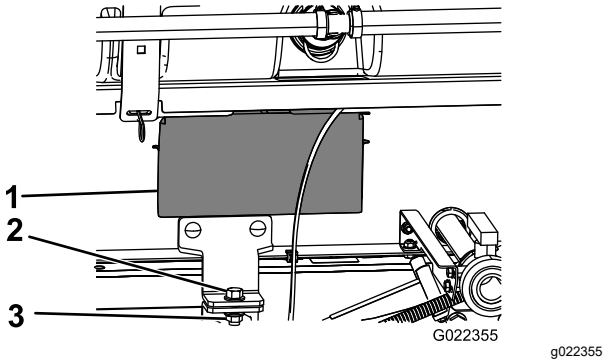

Figure 36

1. Access panel door
2. Bolt (1/2 x 1-1/2 inches)
3. Locknut (1/2 inch)

6. Check the hoses or wiring that you can see through the opening in the skid frame for signs of pinching or bending.

   Important: **If any hoses or wiring on the tank skid assembly are pinched or bent, raise the assembly up, adjust its positioning, and tie the items back.**

7. Align the front mounting brackets with the hold-down brackets installed in 3 Installing the Hold-Down Brackets for the Tank Skid (page 13).
8. Secure the hold down bracket of the tank skid assembly to the bed bracket on the frame at

each side of the machine with a bolt (1/2 x 1-1/2 inches) and a locknut (1/2 inch) as shown in Figure 36.

9. Torque the bolt and locknut to 91 to 113 N·m (67 to 83 ft-lb).
10. Repeat steps 7 through 9 at the other side of the tank skid and machine.

14

Installing the Center Boom Section

Parts needed for this procedure:

1	Center-boom assembly
10	Bolt (3/8 x 1 inch)
10	Flange locknut (3/8 inch)
2	Boom-transport cradle
4	Bolt (1/2 x 1-1/4 inches)
4	Flange nut (1/2 inch)

Assembling the Boom-Transport Cradles

1. Attach lifting equipment to the center boom section and remove it from the shipping container.
2. Align the boom transport cradles to the center boom section (Figure 37).

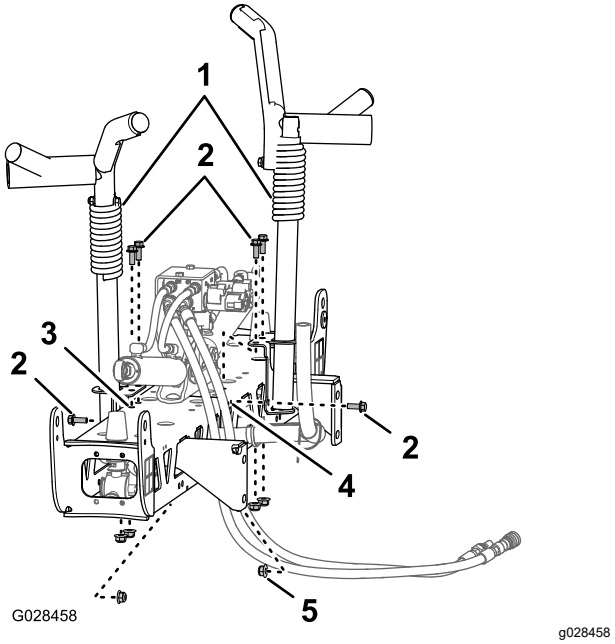

Figure 37

1. Boom-transport cradle
2. Bolts (3/8 x 1 inch)
3. Vertical holes (boom center section)
4. Horizontal hole (boom center section)
5. Flanged locknut (3/8 inch)

3. Assemble the cradles to the boom section (Figure 37 and Figure 38) with 6 bolts (3/8 x 1 inch) and 6 flanged locknuts (3/8 inch).

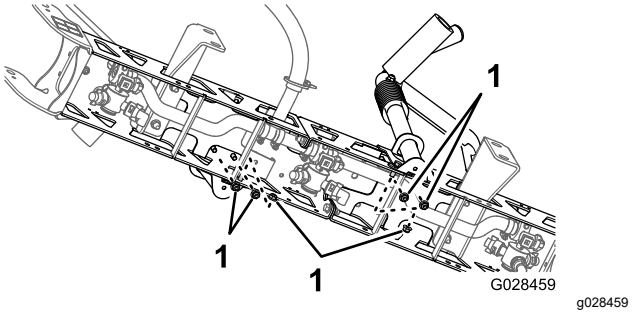

Figure 38

1. Locknuts (3/8 inch)

4. Torque the bolts and nuts to 37 to 45 N·m (27 to 33 ft-lb).

Installing the Center Boom Section to the Tank Skid

1. Start the machine, remove the bed support from the lift cylinder and stow the support, lower the tank skid, shutoff the machine, and remove the key from the starter switch.
2. Align the bottom hole in the section mounting brackets of the center boom assembly with the

third hole from the bottom in the boom supports on the spray skid frame, as shown in Figure 39.

Note: If necessary, loosen the boom supports and adjusted them to the center boom section for better hole alignment. Torque the bolts and nuts to 67 to 83 N·m (91 to 113 ft-lb).

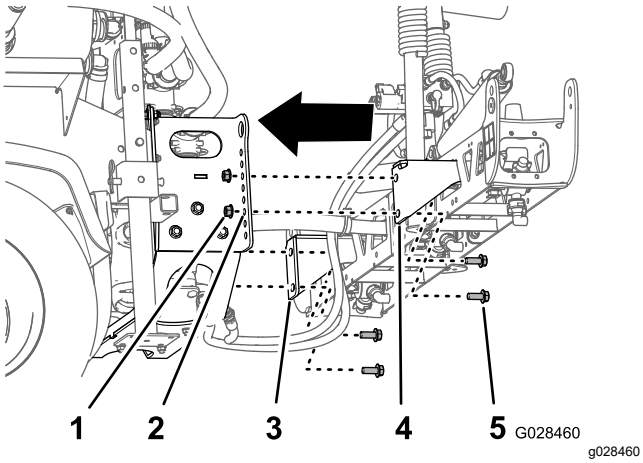

Figure 39

1. Locknut (1/2 inch)
2. Hole 3—from the bottom (boom support)
3. Section mounting bracket (left)
4. Section mounting bracket (right)
5. Bolt (1/2 x 1-1/4 inches)

3. Assemble the center boom assembly to the spray skid frame with 4 bolts (1/2 x 1-1/4 inches) and 4 locknuts (1/2 inch).
4. Torque the bolts and nuts to 67 to 83 N·m (91 to 113 ft-lb).

Connecting the Hoses and Wiring for the Boom Lift Valve

- For HD-Series Models with a Manual Transmission, refer to the installation instructions for the Multi Pro WM Turf Sprayer Finishing Kit, Manual Workman Utility Vehicle.
- For HDX-Auto Model, refer to the installation instructions for the Multi Pro WM Turf Sprayer Finishing Kit, Automatic Workman Utility Vehicle.

15

Installing the Left and Right Boom Section

Parts needed for this procedure:

1	Left boom section
1	Right boom section
8	Flange-head bolts (3/8 x 1-1/4 inches)
8	Backing plates
8	Flange locknuts (3/8 inch)
2	Clevis pin
2	Hairpin

Procedure

Each boom section weighs approximately 14 kg (30 lb).

1. Remove the 4 flange-head bolts (3/8 x 1-1/4 inches), 4 backing plates, and 4 flange locknuts (3/8 inch) from the hinge bracket of the center-boom section.
2. Rotate each pivot bracket at the end of the center boom section so that the brackets align vertically (Figure 40).

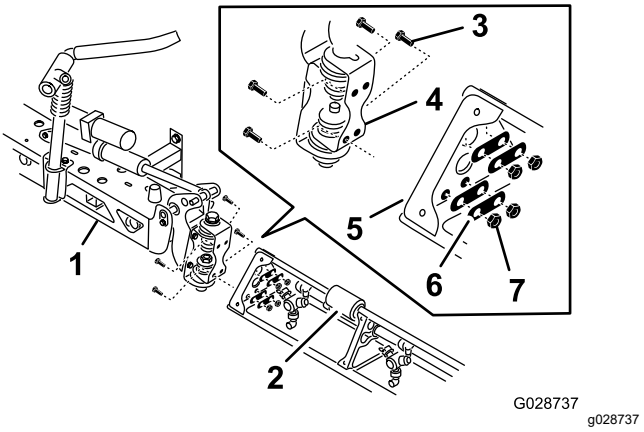

Figure 40

1. Center boom section
2. Boom extension
3. Hinge plate
4. Flange-head bolts (3/8 x 1-1/4 inches)
5. Triangular mounting plate
6. Backing plates
7. Flange locknuts (3/8 inch)

3. Lift the outer boom section and align holes in the triangular mounting plate at the end of the outer boom section with the holes in the pivot bracket.

Note: Ensure that the turrets for the sprayer nozzles are facing rearward.

4. Assemble hinge plate to the triangular plate using 4 flange-head bolts, 4 backing plates, and 4 flange locknuts (Figure 40), that you removed in step 1.
5. Torque the nuts bolts and nuts to 37 to 45 N·m (27 to 33 ft-lb).
6. Align the rod end of the boom lift cylinder with the holes in the horn of the pivot bracket (Figure 40).

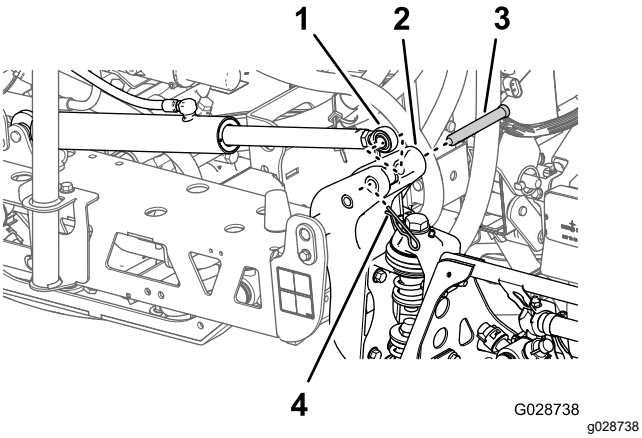

Figure 41

1. Rod end (boom lift cylinder)
2. Horn (pivot bracket)
3. Clevis pin (5/8 x 4-3/4 inches)
4. Hairpin

7. Secure the rod end to the pivot bracket with a clevis pin and a hairpin (Figure 40).
8. Repeat step 1 through 5 on the other side of the center-boom assembly with the opposing boom section.

Note: Before you finish this procedure, ensure that all of turrets for the spray nozzles are facing rearward.

16

Installing the Boom Hoses

Parts needed for this procedure:

3	Hose clamps
2	R-clamp
2	Shoulder bolt
2	Washer
2	Nut

Installing the Left and Right Boom Section Hoses

1. Route the boom-section hoses as shown in Figure 42 and Figure 43.

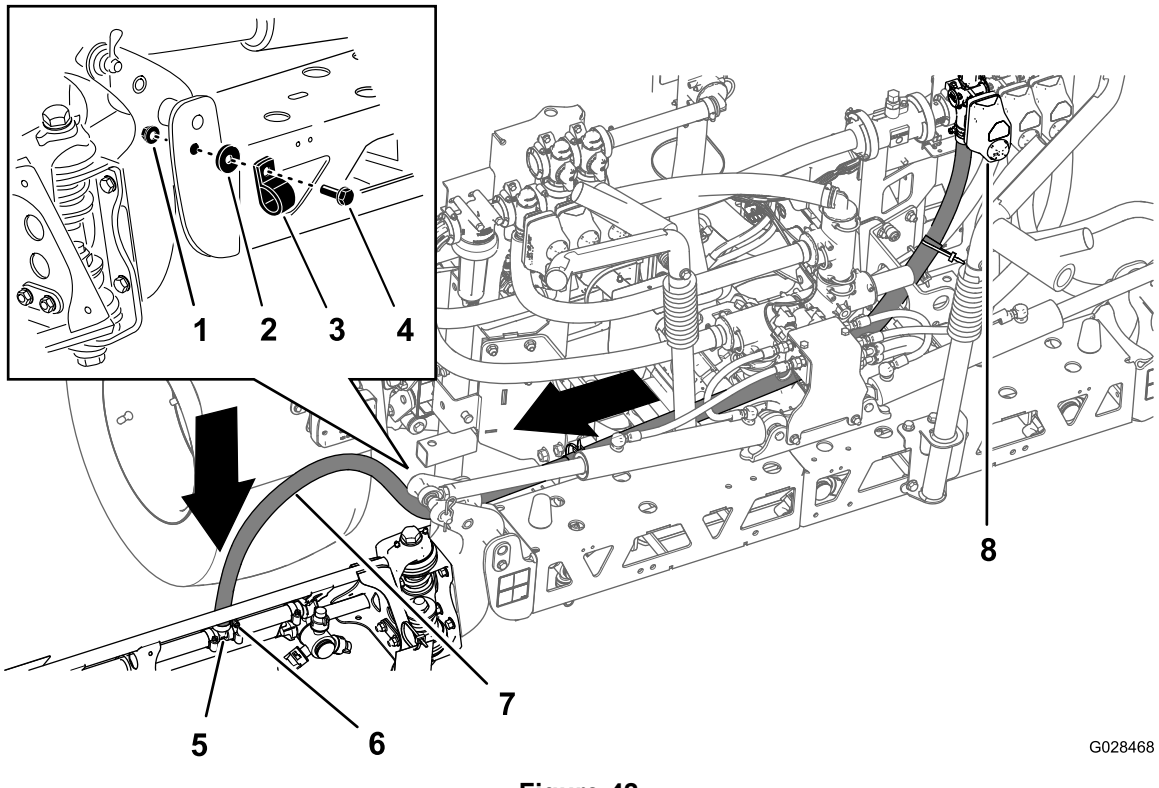

Figure 42

Hose—Left Boom Section

1. Nut
2. Washer
3. R-clamp
4. Shoulder bolt
5. T-fitting
6. Hose clamp
7. Left-boom hose
8. Left-section valve

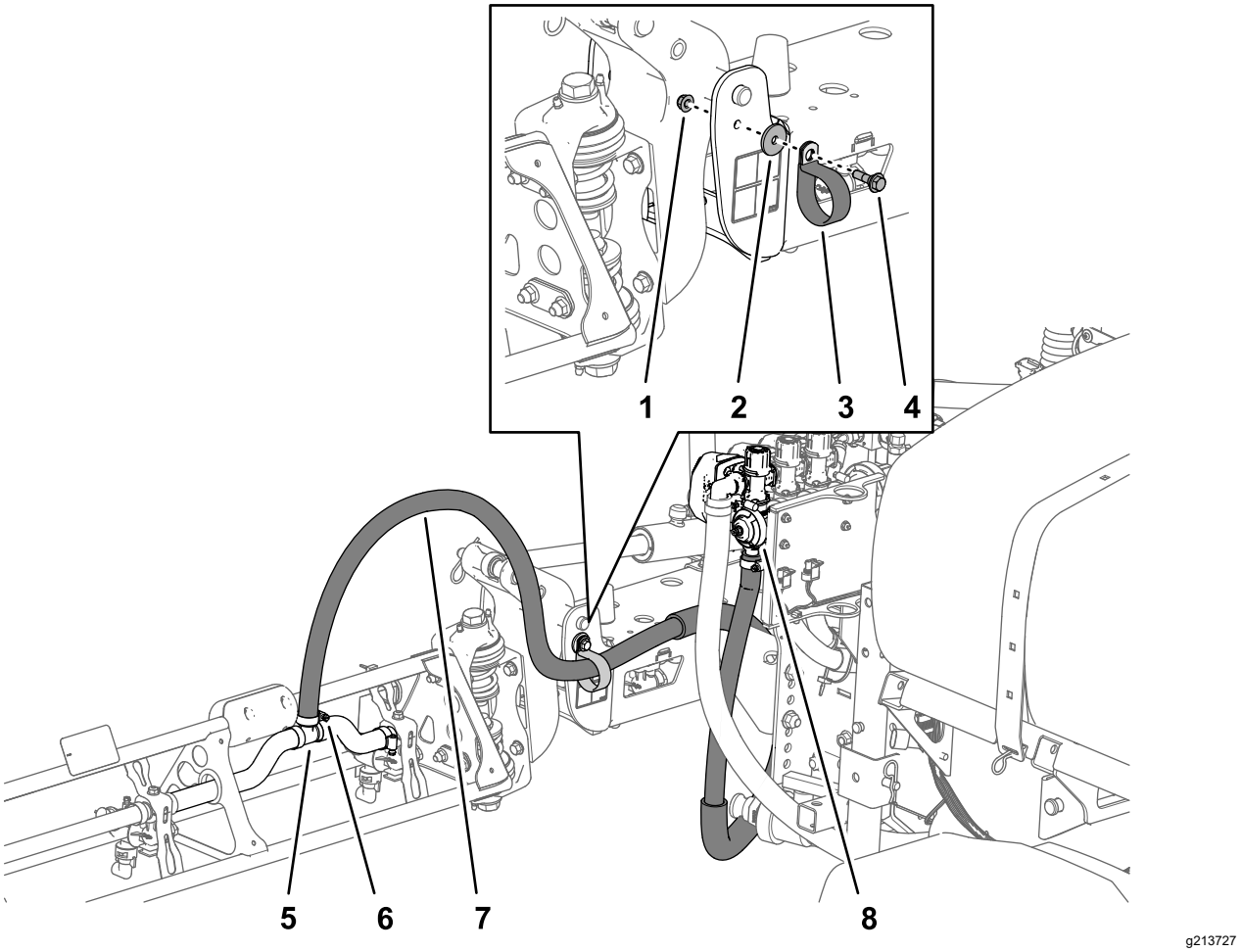

Figure 43
Hose—Right Boom Section

1. Nut
2. Washer
3. R-clamp
4. Shoulder bolt
5. T-fitting
6. Hose clamp
7. Right-boom hose
8. Right-section valve

2. Secure the boom hoses to the front side of the center boom section (Figure 42 and Figure 43) with 1 R-clamp, 1 shoulder bolt (5/16 x 1 inch), 1 locknut (5/16 inch), and 1 washer (5/16 inch).
3. Install the boom section hose over the barbed T-fitting at the boom section and secure the hose with a hose clamp (Figure 42 and Figure 43).

   Note: Apply a coat of liquid soap to the hose barb of the tee fitting to ease installation of the hose.
4. Repeat steps 1 through 3 on the hose to the boom section on the other side of the sprayer.

Installing the Center Boom-Section Hose

1. Route the center boom-section hose as shown in Figure 44.

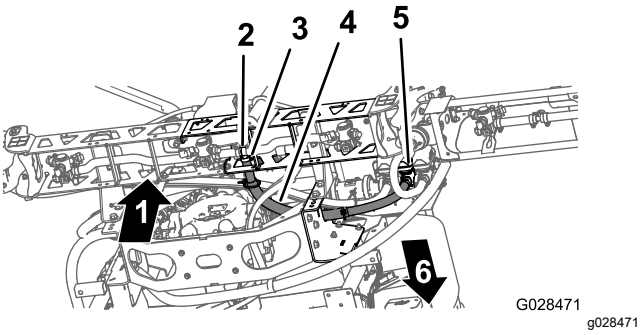

Figure 44

1. Up
2. T-fitting
3. Hose clamp
4. Center-boom hose
5. Center-section valve
6. Front of the machine

2. Install the boom section hose over the barbed T-fitting at the center boom section and secure the hose with a hose clamp (Figure 44).

   Note: Apply a coat of liquid soap to the hose barb of the tee fitting to ease installation of the hose.

17

Installing the Nozzles

No Parts Required

Procedure

The nozzles that you use to apply your chemicals vary depending on the rate of application that you need; therefore, nozzles are not supplied with the kit. To obtain the correct nozzles for your needs, contact your authorized Toro distributor and be prepared to give them then following information:

- The target application rate in liters per hectare, US gallons per acre, or US gallons per 1,000 square feet.
- The target speed of the vehicle in kilometers per hour or miles per hour.

1. Thread or insert the nozzle into the nozzle receptacle followed by a gasket.
2. Slide the nozzle receptacle over the nozzle fitting on a turret.
3. Turn the nozzle clockwise to lock the cams on the receptacle in place.
4. Verify the fan portion of the nozzle.

See the *Installation Instructions* accompanying the nozzles for more information.

18

Installing the Freshwater Tank

Parts needed for this procedure:

1	Freshwater tank
1	90° elbow (3/4 inch NPT)
1	90° spigot
1	Freshwater-tank mount
4	Mount strap
4	Flange-head bolt (5/16 x 5/8 inch)
10	Flange locknut (5/16 inch)
1	Support tube (freshwater tank)
1	Jam nut (5/16 inch)
1	Bolt (5/16 x 1 inch)
2	Shoulder bolt (1/2 x 1-15/16 inches)
2	Bolt (5/16 x 2-1/4 inches)
2	Washer (5/16 inch)

Assembling the Mount Bracket to the Freshwater Tank

1. Assemble the freshwater tank to the freshwater-tank mount with the 2 mount straps, 4 flange-head bolt (5/16 x 5/8 inch), and 4 flange locknuts (5/16 inch) as shown in Figure 45.

   Note: Ensure that the elbow and spigot are aligned to the same side of the tank as the freshwater-tank decal.

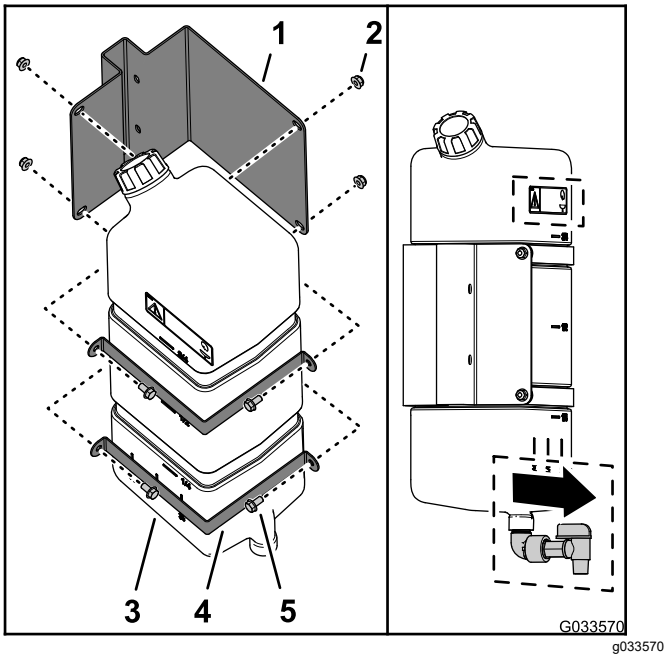

Figure 45

1. Freshwater-tank mount
2. Flange locknut (5/16 inch)
3. Freshwater tank
4. Mount strap
5. Flange-head bolt (5/16 x 5/8 inch)

2. Torque the bolts and nuts to 20 to 25 N·m (175 to 225 in-lb).

Installing the Tank-Support Tube

1. Align the support tube for the freshwater tank with the tank-support channel (Figure 46).

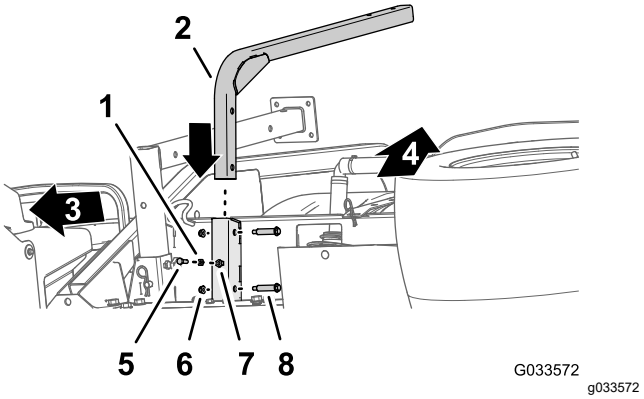

Figure 46

1. Jam nut (5/16 inch)
2. Support tube (freshwater tank)
3. Front of the machine
4. Top of the machine
5. Bolt (5/16 x 1 inch)
6. Flange locknut (5/16 inch)
7. Weld nut (support channel—freshwater tank)
8. Shoulder bolt (1/2 x 1-15/16 inches)

2. Align the holes in the support tube with the holes in the channel (Figure 46).
3. Secure the tube to the channel (Figure 46) with the 2 shoulder bolts (1/2 x 1-15/16 inches) and 2 flange locknuts (5/16 inch).
4. Torque the bolts and nuts to 20 to 25 N·m (175 to 225 in-lb).
5. Thread the jam nut (5/16 inch) into the bolt (5/16 x 1 inch) as shown in Figure 46.
6. Thread the bolt (5/16 x 1 inch) and jam nut into the weld nut at the bottom of the tank support channel and tighten the bolt and jam nut by hand (Figure 46).

Installing the Tank

Note: The Multi-Pro WM turf sprayer requires a 4-post ROPS or cab installed onto the Workman vehicle.

1. Assemble the freshwater tank and mount onto the support tube with the 2 bolts (5/16 x 2-1/4 inches) and 2 flange locknuts (5/16 inch) as shown in Figure 47.

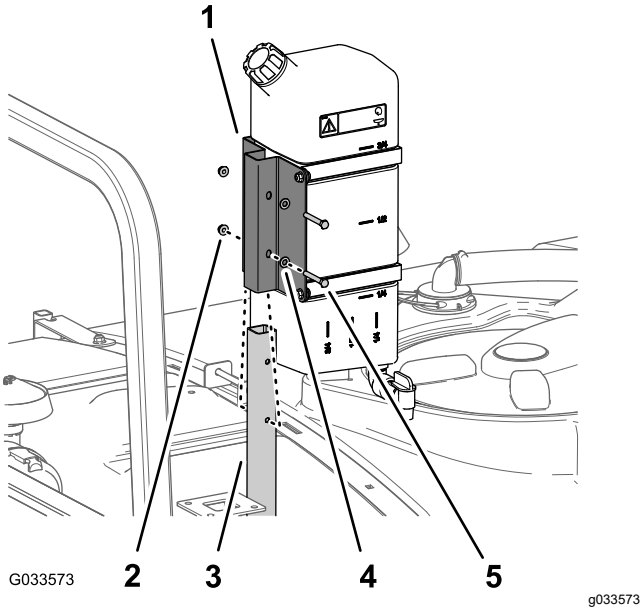

Figure 47

1. Freshwater tank mount
2. Flange locknut (5/16 inch)
3. Support tube (freshwater tank)
4. Washer (5/16 inch)
5. Bolt (5/16 x 2-1/4 inches)

2. Torque the bolts and nuts to 20 to 25 N·m (175 to 225 in-lb).

19

Installing the Anti-Siphon Fill Receptacle

Parts needed for this procedure:

1	Fill receptacle assembly
1	Flange-head bolt (5/16 x 3/4 inch)

Procedure

Place the fill-receptacle assembly over the threaded hole in the tank (Figure 48) and secure it with a flange-head bolt (5/16 x 3/4 inch).

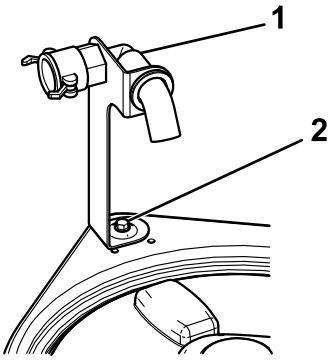

Figure 48

1. Fill-receptacle assembly
2. Flange bolt (5/16 x 3/4 inch)

20

Storing the Jack Stands

Parts needed for this procedure:

2	Front jack stand
2	Rear jack stand
4	Cotter pin
2	Clevis pin (4-1/2 inches)
2	Clevis pin (3 inches)
2	Knob

Procedure

1. Insert the front jack stands upside down into the frame near the front tie-down points (Figure 49).

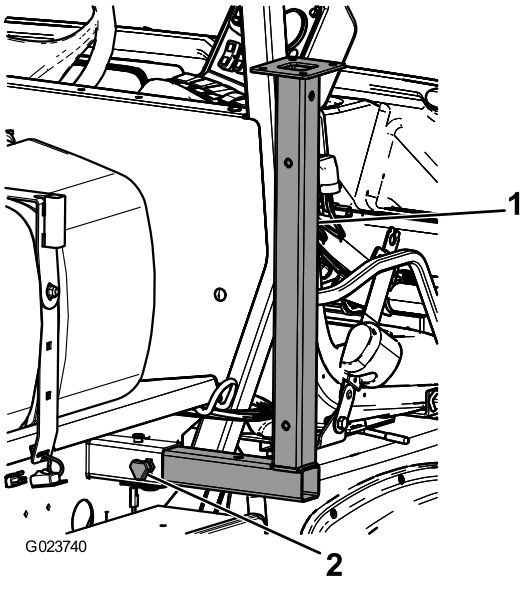

Figure 49

1. Front jack stand
2. Knob

2. Secure the front jack stands with 2 clevis pins (3 inches) and 2 cotter pins through the middle hole on the stands.
3. Insert the rear jack stands from the bottom, up into the frame, near the rear tie-down points (Figure 50).

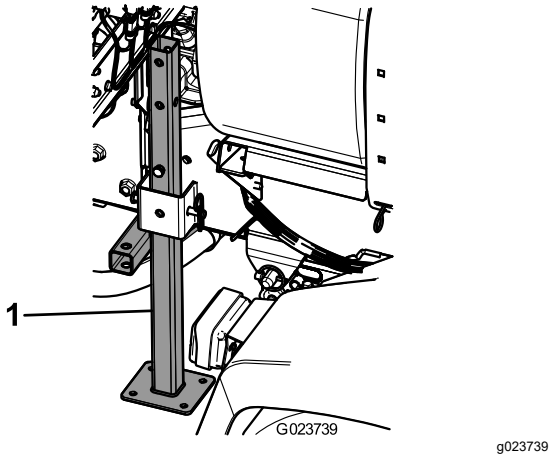

Figure 50

1. Rear jack stand

4. Secure the rear jack stands with 4 clevis pins (4-1/2 inches) and 4 cotter pins through the last hole on the stands.

Product Overview

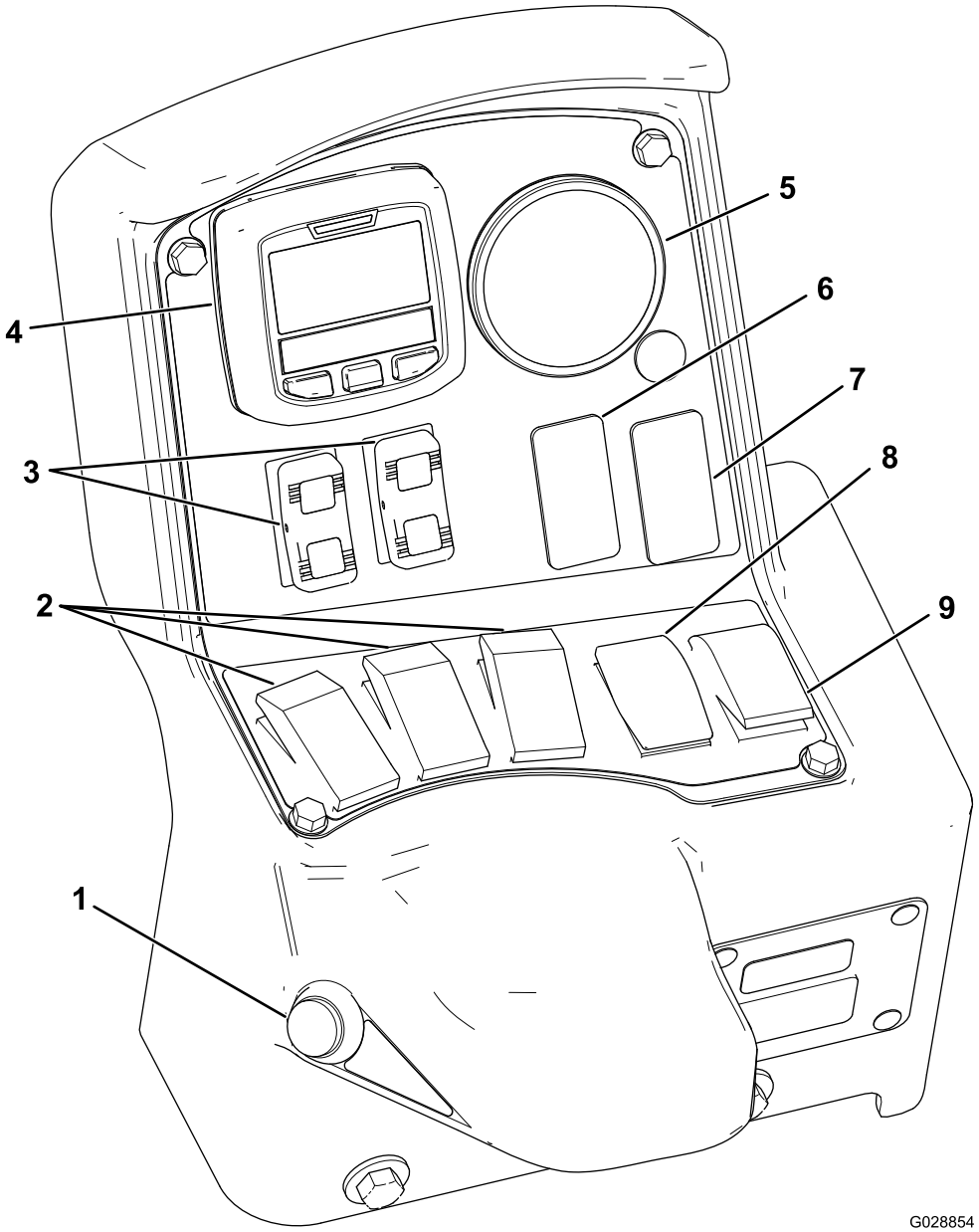

g028854

Figure 51

1. Master section switch
2. Left, center, and right section switches
3. Boom-section lift switches
4. InfoCenter
5. Pressure gauge
6. Rinse switch (optional)
7. Sonic-boom switch (optional)
8. Application-rate switch
9. Agitation switch

Controls

InfoCenter LCD Display

The InfoCenter LCD display shows information about your machine and battery pack such as the current battery charge, the speed, diagnostics information, and more (Figure 51). For more information, refer to Using the InfoCenter (page 39).

Master Section Switch

The master section switch (Figure 51) is located on the side of the console and to the right of the

operator's seat. It allows you to start or stop the spray operation. Press the switch to enable or disable the spray system.

Left, Center, and Right Section Switches

The left, center, and right section switches are located on the control panel (Figure 51). Toggle each switch forward to turn the corresponding section on and rearward to turn them off. When the switch is turned on, a light on the switch illuminates. These switches affect the spray system only when the master section switch is on.

Application-Rate Switch

The application-rate switch is located on the left side of the control panel (Figure 51). Press and hold the switch upward to increase the spray system application rate, or press and hold it downward to decrease application rate.

Boom-Section Lift Switches

The boom-section lift switches are located on the control panel and are used to raise the outer boom sections.

Sprayer-Mode Switch (HDX-Auto Model)

Use the sprayer-mode switch to select between the following spraying methods:

- Use the manual mode when you want to manually control the sprayer application rate.
- Use the automatic mode when you want the computer to control sprayer application rate with setting you enter in the InfoCenter.

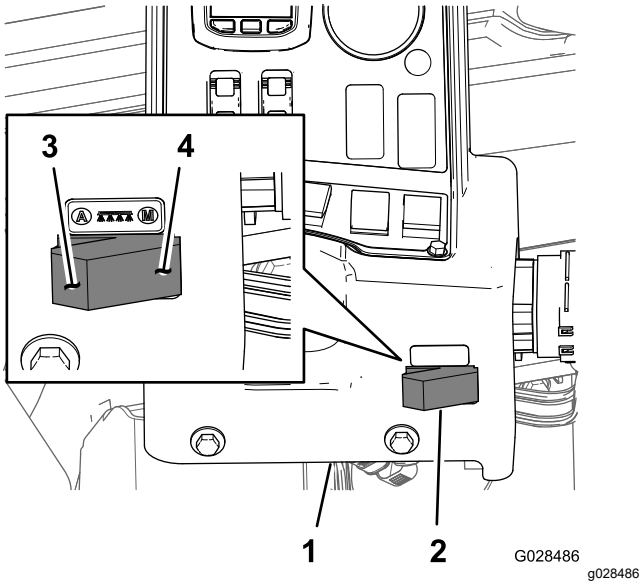

Figure 52

1. InfoCenter console
2. Sprayer-mode switch
3. Automatic mode (sprayer-mode switch position)
4. Manual mode (sprayer-mode switch position)

Regulating (Rate Control) Valve

The regulating valve located behind the tank (Figure 53), The regulating valve controls the amount of fluid that is routed to the section valves or the rate return to the tank.

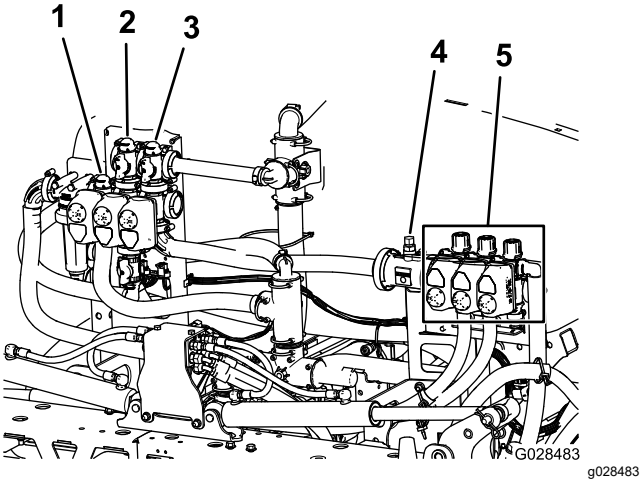

Figure 53

1. Regulating (rate control) valve
2. Agitation valve
3. Master-boom valve
4. Flow meter
5. Section valves

Flow meter

The flow meter measures the flow rate of the fluid to the boom section valves (Figure 53).

Section Valves

Use the boom-section valves to turn the sprayer pressure on or off to the sprayer nozzles in the left, center, and right boom sections (Figure 53).

Section-Bypass Valves

The boom section-bypass valves (Figure 54) redirect the fluid flow from a boom to the tank when you turn off the boom section. You can adjust these valves to ensure that the boom pressure remains constant no matter which combination of booms you are operating; refer to Calibrating the Section-Bypass Valves (page 55).

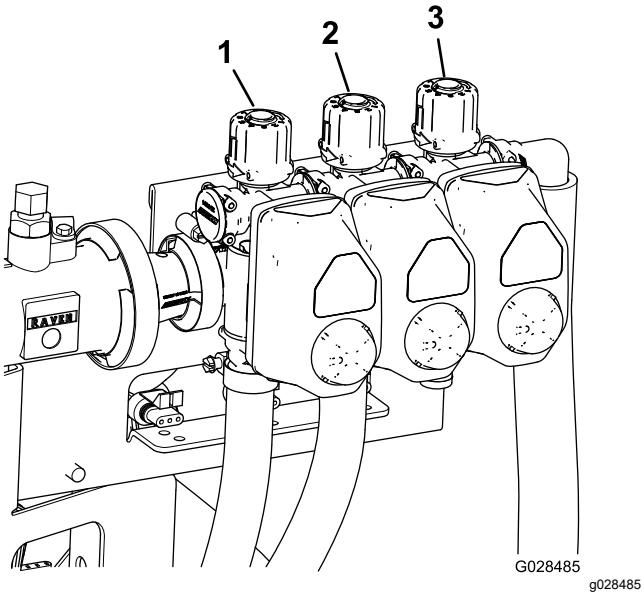

Figure 54

1. Left boom section-bypass valve
2. Center boom section-bypass valve
3. Right boom section-bypass valve

Agitation-Throttle Valve

This valve is located on the rear left side of the tank (Figure 55). Turn the knob on the valve to the 6 o'clock position to turn on the tank agitation and to the 8 o'clock position to turn off the tank agitation.

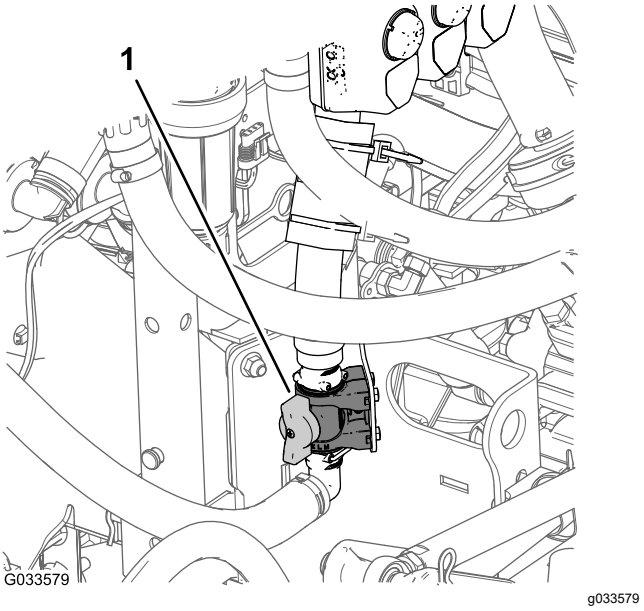

Figure 55

1. Agitation-control valve

Note: HD-series models with a manual transmission—for agitation to work the PTO and clutch must be engaged and the engine must be running above an idle. If you stop the sprayer and need agitation circulating the content of the tank, place the range shift lever in the NEUTRAL position, let out the clutch, engage the parking brake, and set the hand throttle (if equipped).

Sprayer Pump

The sprayer pump is located at the rear of the machine (Figure 56).

Control the sprayer pump by performing the following:

- For the **HD-series model with a manual transmission**—At the center console of the machine, move the PTO lever to the ENGAGE position to run the pump; move the PTO lever to the DISENGAGE position to stop the pump. Refer to the Workman HDX-Auto Utility Vehicle *Operator's Manual*.
- For the **HDX-Auto model**—At the dash panel to the left of the steering-wheel column, press the rocker switch for the high-flow hydraulic system up to the ON position to run the sprayer pump (the light of the rocker switch illuminates). Press the rocker switch down to the OFF position shut off the sprayer pump. Refer to the High-Flow Hydraulic Kit *Installation Instructions* (the light of the rocker switch shuts off).

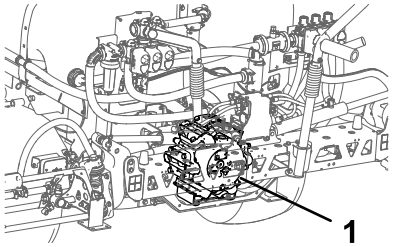

g028857

Figure 56

1. Sprayer pump

Specifications

Note: Specifications and design are subject to change without notice.

Spray system base weight (vehicle weight not included)	424 kg (935 lb)
Tank capacity	757 L (200 US gallons)
Overall vehicle length with the standard spray system	422 cm (166 inches)
Overall vehicle height with standard spray system to the top of the tank	147 cm (58 inches)
Overall vehicle height with standard spray system and the booms stored in the X pattern	234 cm (92 inches)
Overall vehicle width with the standard spray system and the booms stored in the X pattern	175 cm (69 inches)

Attachments/Accessories

A selection of Toro approved attachments and accessories is available for use with the machine to enhance and expand its capabilities. Contact your authorized Toro distributor.

To ensure optimum performance and continued safety certification of the machine, use only genuine Toro replacement parts and accessories. Replacement parts and accessories made by other manufacturers could be dangerous, and such use could void the product warranty.

Operation

Note: Determine the left and right sides of the machine from the normal operating position.

Note: If you need to transport the vehicle on a trailer with the sprayer installed, make sure that the booms are tied down and secure.

Before Operation

Before Operation Safety

General Safety

- Never allow children or untrained people to operate or service the machine. Local regulations may restrict the age of the operator. The owner is responsible for training all operators and mechanics.
- Become familiar with the safe operation of the equipment, operator controls, and safety signs.
- Before you leave the operator's position, do the following:
  - Park the machine on a level surface.
  - Shift the transmission into the NEUTRAL position (manual) or the PARK position (automatic).
  - Engage the parking brake.
  - Shut off the engine and remove the key (if equipped).
  - Wait for all movement to stop.
- Know how to stop the machine and shut off the engine quickly.
- Check that operator-presence controls, safety switches, and guards are attached and functioning properly. Do not operate the machine unless they are functioning properly.
- If the machine does not function correctly or is damaged in any way, do not use the machine. Correct the problem before you operate the machine or attachment.
- Ensure that all fluid line connectors are tight and that all hoses are in good condition before applying pressure to the system.

Chemical Safety

Chemical substances used in the sprayer system may be hazardous and toxic to you, bystanders, and animals, and they may damage plants, soil, and other property.

- Read the information on each chemical. Refuse to operate or work on the sprayer if this information is not available.

- Before working on a sprayer system, ensure that it has been neutralized and triple rinsed according to the recommendations of the chemical manufacturer(s) and that all the valves have been cycled 3 times.
- Verify that there is an adequate supply of clean water and soap nearby, and immediately wash off any chemicals that contact you.
- Carefully read and follow the chemical warning labels and safety data sheets (SDSs) for all chemicals used, and protect yourself according to the chemical manufacturer's recommendations.
- Always protect your body while using chemicals. Use the appropriate personal protective equipment (PPE) to guard against contact with chemicals, such as the following:
  - safety glasses, goggles, and/or face shield
  - a chemical suit
  - a respirator or filter mask
  - chemical-resistant gloves
  - rubber boots or other substantial footwear
  - a clean change of clothes, soap, and disposable towels for cleanup
- Obtain proper training before using or handling chemicals.
- Use the correct chemical for the job.
- Follow the chemical manufacturer's instructions for the safely applying the chemical. Do not exceed the recommended system application pressure.
- Do not fill, calibrate, or clean the machine while people, especially children, or pets are in the area.
- Handle chemicals in a well-ventilated area.
- Do not eat, drink, or smoke while working near chemicals.
- Do not clean spray nozzles by blowing through them or placing them in your mouth.
- Always wash your hands and other exposed areas as soon as possible after working with chemicals.
- Keep chemicals in their original packages and stored in a safe location.
- Properly dispose of unused chemicals and chemical containers as instructed by the chemical manufacturer and your local codes.
- Chemicals and fumes are dangerous; never enter the tank or place your head over or in the opening of a tank.
- Follow all local, state, and federal regulations for spreading or spraying chemicals.

Using the InfoCenter

The InfoCenter LCD display shows information about your machine, such as the operating status, various diagnostics, and other information about the machine (Figure 57). There is a splash screen and main information screen on the InfoCenter. You can switch between the splash screen and main information screen, at any time, by pressing any of the InfoCenter buttons and then selecting the appropriate directional arrow.

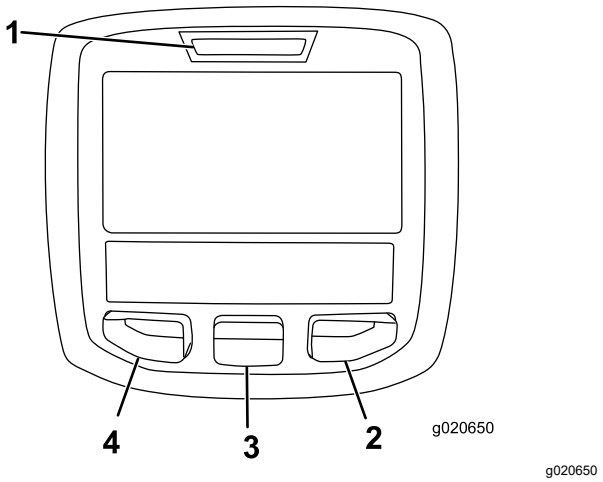

Figure 57

1. Indicator light
2. Right button
3. Middle button
4. Left button

- Left button, Menu access/Back button—press this button to access the InfoCenter menus. You can also use it to back out of any menu you are currently using.
- Middle button—use this button to scroll down menus.
- Right button—use this button to open a menu where a right arrow indicated additional content.

Note: The purpose of each button may change depending on what function is active at the time. The LCD display shows an icon above each button that indicates its current function.

Starting the InfoCenter

1. Insert the key into the starter switch and rotate it to the ON position.

   Note: The InfoCenter illuminates and displays the initialization screen (Figure 58).

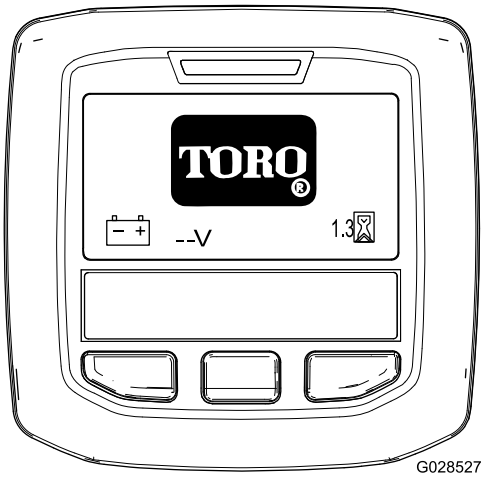

g028527

Figure 58

2. After approximately 15 seconds, the home screen appears. Press the center selection button to display the information context (Figure 59).

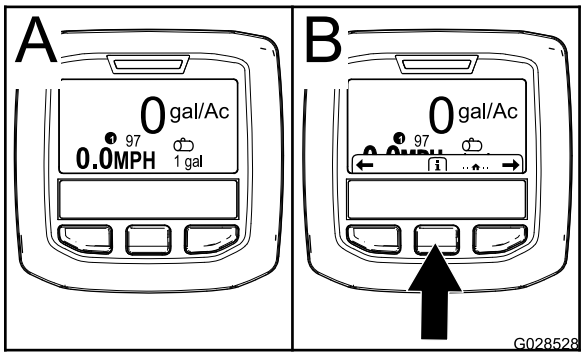

g028528

Figure 59

- Press the center selection button again to navigate to the Main Menu.
- Right selection button: **Total area sprayed** (Figure 60A)
- Right selection button: **Application rate** (Figure 60B)
- Left selection button: **Sub-area sprayed** (Figure 60C)
- Left selection button: **Tank volume** (Figure 60D)

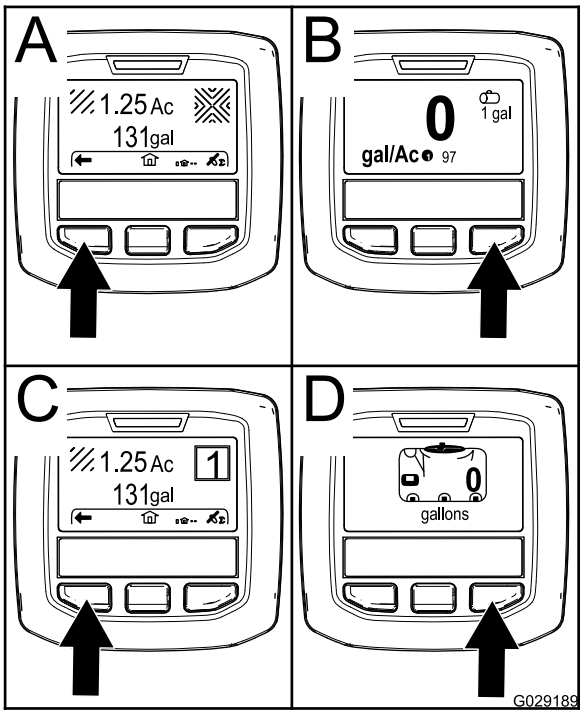

g029189

Figure 60

Note: Rotating the starter switch to the START position and starting the engine causes the values indicated in the InfoCenter display to reflect the running machine.

Accessing the Settings Menu

1. Start the InfoCenter; refer to Starting the InfoCenter (page 39).

   Note: The Home screen displays.

2. Press the center selection button to access the Information context.

   Note: The information context icon displays.

3. Press the center selection button to access the Main Menu (Figure 61).

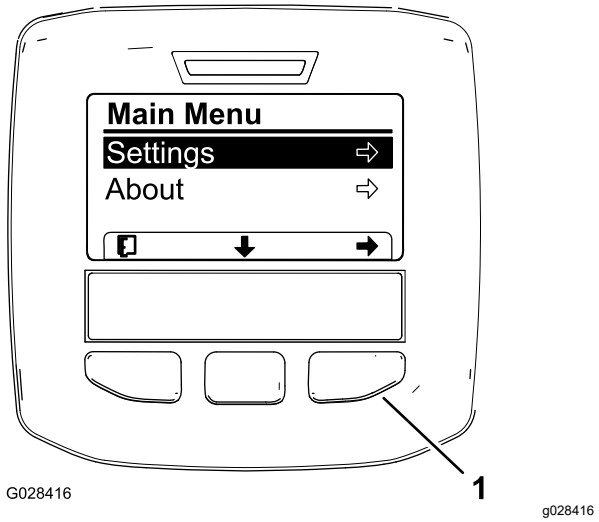

Figure 61

Additional options for the HDX-Auto model are not shown.

1. Right selection button (select context)

4. Press the right selection button to display the Settings sub-menus.

   Note: The Main Menu displays with the Settings option selected.

   Note: Pressing the center selection button (the button below the down arrow icon in the display) moves the selected option down.

Changing the Units of Measure (English and Metric)

1. Access the Settings menu; refer to Accessing the Settings Menu (page 40).
2. To change the unit of measure, press the right selection button to change the listed units of measure (Figure 62).
   - **English:** mph, gallons, and acre
   - **Turf:** mph, gallons, and 1,000 ft^2
   - **SI (metric):** kph, liter, hectare

   Note: The display switches between English, turf, and metric units.

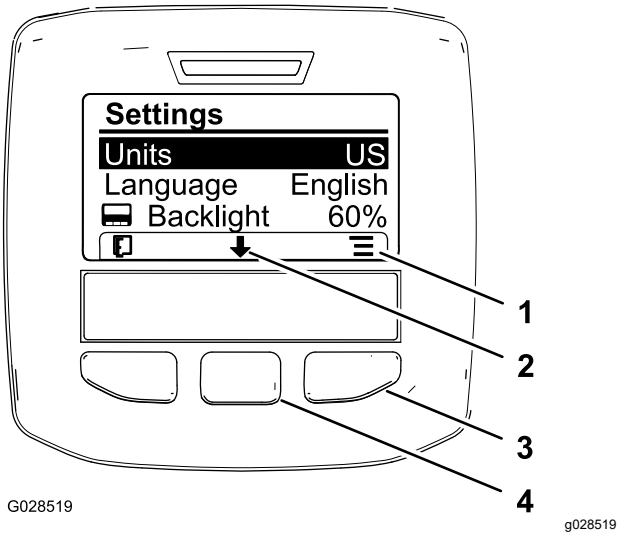

Figure 62

1. List options (icon)
2. Scroll down (icon)
3. Right selection button (list context)
4. Center selection button (scroll context)

   Note: Pressing the left selection button saves your selection, exits the Settings menu, and returns to the Main Menu.

3. To change the language used in the display, press the center selection button (the button below the down arrow in the display) to move the selected option to Language (Figure 62).
4. Press the right selection button (the button below the list icon in the display) to highlight the listed language used in the display (Figure 62).

   Note: Available languages include English, Spanish, French, German, Portuguese, Danish, Netherlands (Dutch), Finnish, Italian, Norwegian, and Swedish.

5. Press the left selection button to save your selection(s), exit the Settings menu, and return to the Main Menu (Figure 61).
6. Press the left selection button to return to the Home screen (Figure 62).

Adjusting the Backlighting and Contract Levels of the Display

1. Access the Settings menu; refer to Accessing the Settings Menu (page 40).
2. To adjust the backlight level of the display, press the center selection button (the button below the down arrow icon in the display) to move the selected option down to the Backlight setting (Figure 63).

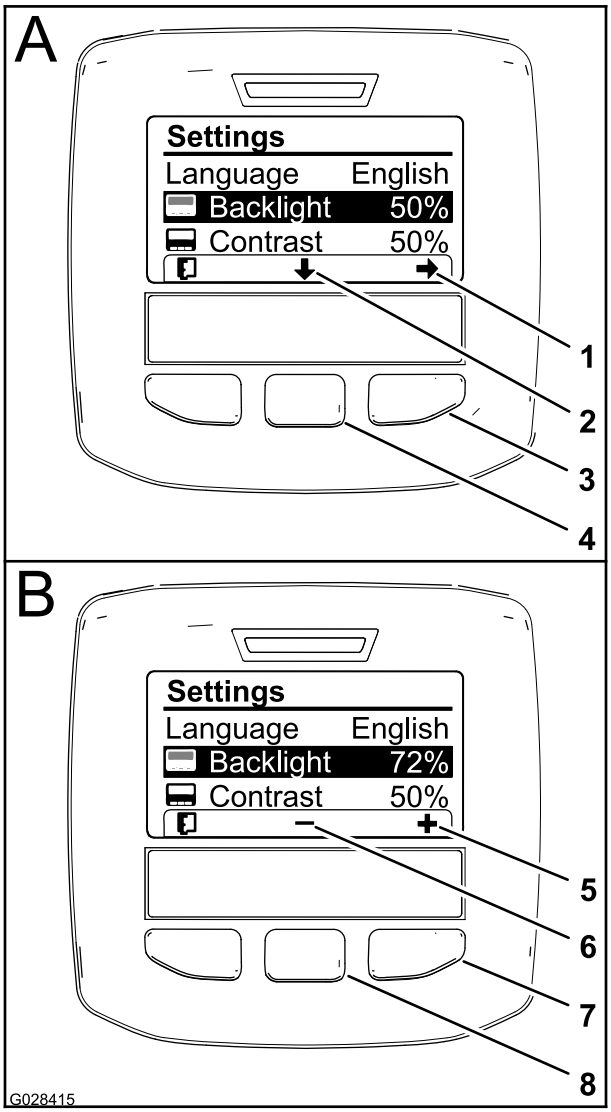

Figure 63

1. Select arrow (icon)
2. Scroll down (icon)
3. Right selection button (select context)
4. Center selection button (scroll context)
5. Increase the value (icon)
6. Decrease the value (icon)
7. Right selection button (raise value context)
8. Center selection button (lower value context)

3. Press the right selection button to display the value adjustment context (Figure 63).

   Note: The display shows a (—) icon over the center selection button and a (+) icon over the right selection button.

4. Use the center selection button and right selection button to change the brightness level of the display (Figure 63).

   Note: As you change the brightness value, the display changes the selected brightness level.

5. Press the left selection button (the button below the list icon in the display) to save your selection, exit the Backlight menu, and return to the Settings menu (Figure 63).
6. To adjust the contrast level of the display, press the center selection button (the button below the down arrow icon in the display) to move the selected option down to the Contrast setting (Figure 63).
7. Press the right selection button to display the value adjustment context (Figure 63).

   Note: The display shows a (—) icon over the center selection button and a (+) icon over the right selection button.

8. Press the left selection button (the button below the list icon in the display) to save your selection, exit the Contrast menu, and return to the Settings menu (Figure 63).
9. Press the left selection button to exit the Settings menu and return to the Main Menu (Figure 61 and Figure 63).
10. Press the left selection button to return to the Home screen (Figure 63).

InfoCenter Icons

Icon Descriptions

	Information icon
	Next
	Previous
	Scroll down
	Enter
	Change the next value in the list
	Increase
	Decrease
	Active screen
	Inactive screen
	Go to the home screen
	Active home screen

	Save value
	Exit menu
	Hour meter
PIN	Correct PIN code entered
	Check PIN entry/Calibration verification
	Master boom On/Boom sprayer Off
	Master boom On/Boom sprayer On
	Full spray tank
	Spray tank at half
	Tank level low
	Empty spray tank
K or k	TURF units (1,000 square feet)
	Area sprayed
	Volume sprayed
	Adjust tank volume
	Home screen
	Clear active area
	Clear all areas
	Adjust digit

Icon Descriptions (cont'd.)

+	Select the next area for accumulation
1	Application rate 1
2	Application rate 2
++	Boost rate

Using the Menus

Access the calibration settings in the InfoCenter menu system by pressing the menu access button while at the main screen. This returns you to the main menu. Refer to the following tables for a summary of the options available from the menus:

Calibration	
Menu Item	**Description**
Test Speed	This menu sets the test speed for calibration.
Flow Calibration	This menu calibrates the flow meter.
Speed Calibration	This menu calibrates the speed sensor.

Selecting the Sprayer Programming

HDX-Auto Model

Switching between Manual Mode and Automatic Mode

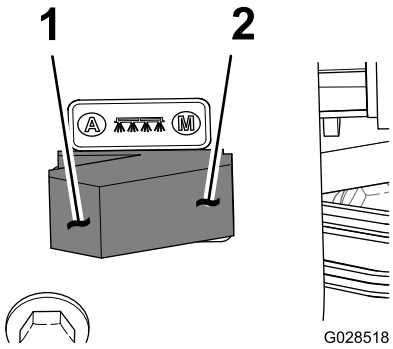

g028518

Figure 64

1. Automatic mode (switch position)
2. Manual mode (switch position)

- At the control console, press the sprayer-mode switch to the left position to control the application

rate of the sprayer through the InfoCenter in the AUTOMATIC MODE.

Note: An icon for the application rate appears in the display of the InfoCenter.

- Press the sprayer-mode switch to the right to control the application rate of the sprayer by hand in the MANUAL MODE.

  Note: When switching from the Automatic mode to the Manual mode, the icon for the application rate disappears from the display.

Switching between Sprayer Programming Settings

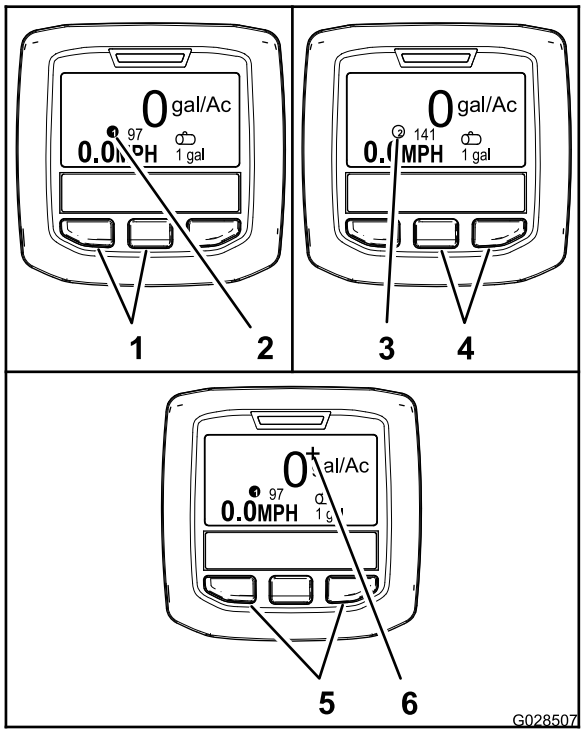

g028507

Figure 65

1. Left and center buttons—selecting application rate 1
2. Icon—application rate 1
3. Icon —application rate 2
4. Center and right buttons—selecting application rate 2
5. Left and right buttons—selecting application rate boost
6. Icon —application rate boost

- To select application rate 1, press the left 2 buttons of the InfoCenter (Figure 65).

  Note: An icon ❶ appears.

- To select application rate 2 (application rate), press the right 2 buttons (Figure 65).

  Note: An icon ② appears.

- To temporarily apply a boost application rate, press and hold the 2 outer buttons (Figure 65).

  Note: An icon + appears.

  Note: The application rate boost is an additional percent above the active program (1 or 2) application rate. Press and hold the buttons to apply the boost application rate; release the buttons to stop the boost rate.

Programming the Application Rate and Application Rate Boost

HDX-Auto Model

Programming the Application Rate 1 and 2

1. From the Home screen, press the center selection button to navigate to the Main Menu.
2. If needed, press the center selection button to highlight the application rate for sprayer program 1 (Figure 66).

   Note: The icon for sprayer application rate 1 looks like the numeral 1 in a circle to the right of a bull's-eye target.

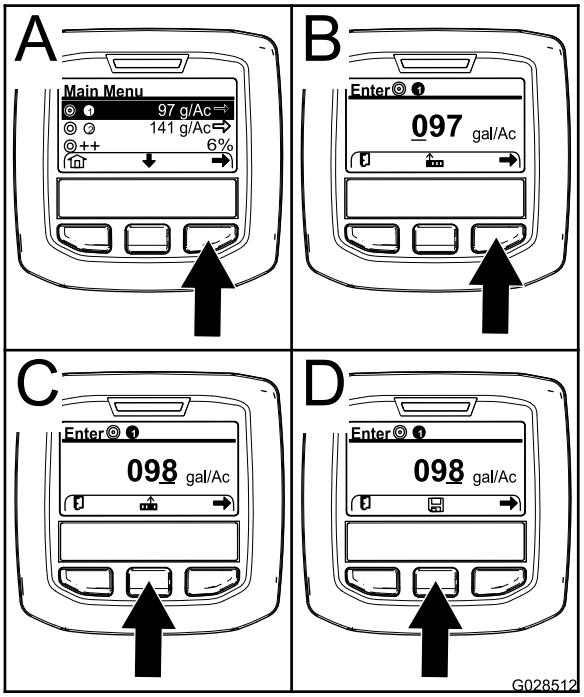

g028512

Figure 66

3. Press the right selection button to select sprayer program 1 (Figure 66A).
4. Set the numerical value by pressing the following selection buttons:
   - Press the right selection button (Figure 66B) to move the cursor to the next numerical position to the right.
   - Press the center selection button (Figure 66C) to increase the numerical value (0 to 9)

5. Once the right-most value is set, press the right selection button.

   Note: The Save Icon appears above the center selection button (Figure 66D).

6. Press the center selection button (Figure 66D) to save the programming for application rate.

7. Press the center selection button to highlight the application rate for sprayer program 2.

   Note: The icon for sprayer application rate 2 looks like the numeral 2 in a circle to the right of a bull's-eye target.

   Note: You can use the application rate for sprayer program 2 to conveniently apply a higher or lower application rate to your turf site as needed.

8. Repeat steps 4 through 6.

Programming the Application Boost Rate

The application boost adds a specified percent to the active program application rate when the outer 2 buttons of the InfoCenter are pressed while spraying in Automatic mode.

1. From the Home screen, press the center selection button to navigate to the Main Menu.

2. If needed, press the center selection button to highlight the application rate boost (Figure 67).

   Note: The icon for the application rate boost look 2 (+) signs to the right of a bull's-eye target (Figure 67).

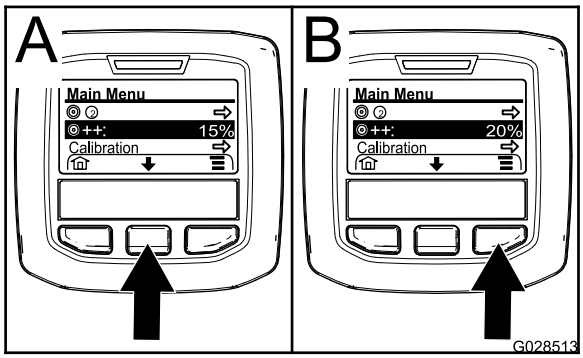

g028513

Figure 67

3. Press the right selection button (Figure 67) to increase the boost percentage in 5% increments (20% maximum).

Using the Settings Menu

HDX-Auto Model

Selecting the Active Application Rate from the Settings Menu

1. From the Main Menu, press the center selection button to navigate to the Settings menu.

2. Press the center selection button to highlight the Active application rate setting (Figure 68).

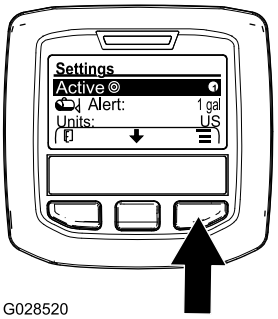

g028520

Figure 68

3. Press the right selection button to toggle between application rate 1 and 2 (Figure 68).

4. Press the left selection button to save and return to the main menu

Setting the Tank-Level Alert

1. From the Main Menu, press the center selection button to navigate to the Settings menu.

2. Press the center selection button to highlight the Alert setting (Figure 69).

   Note: The (-) and (+) icons appears above the center and right selection buttons.

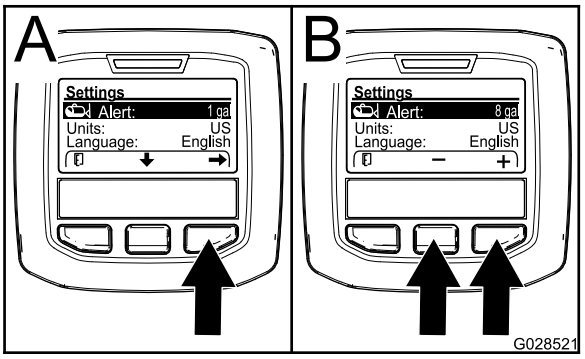

g028521

Figure 69

3. Press the right selection button (Figure 69).

4. Use the center or right selection buttons to enter the minimum quantity in the tank when the alert displays during sprayer operation (Figure 69).

Note: Holding the button down increases the value of the tank alert by 10%.

5. Press the left selection button to save and return to the main menu

Entering the PIN into the InfoCenter

Note: Entering the PIN allows you to change the access protected settings and maintain the password.

Note: The factory entered PIN number is 1234.

1. From the Main Menu, press the center selection button to navigate to the Settings menu.
2. Press the center selection button to highlight the Protected Menus setting.

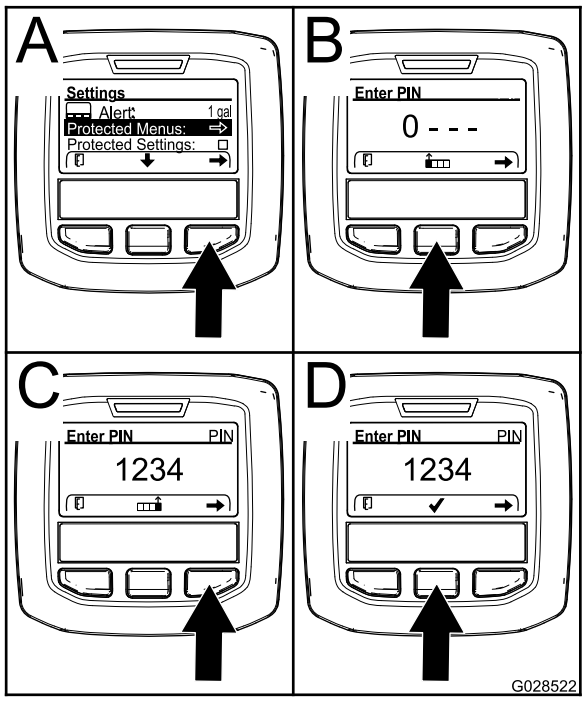

g028522

Figure 70

3. Press the right select button to select Protected Menus (Figure 70A).
4. Set the numerical value in the PIN entry screen by pressing the following selection buttons:
   - Press the center selection button (Figure 70B) to increase the numerical value (0 to 9)
   - Press the right selection button (Figure 70C) to move the cursor to the next numerical position to the right.
5. Once the right-most value is set, press the right selection button.

   Note: The checkmark icon appears above the center selection button (Figure 70D).
6. Press the center selection button (Figure 70D) to enter the password.

Changing the PIN

1. Enter the current PIN; refer to steps 1 through 6 in Entering the PIN into the InfoCenter (page 46).
2. From the Main Menu, press the center selection button to navigate to the Settings menu.
3. Press the center selection button to highlight the Protected Menus setting.

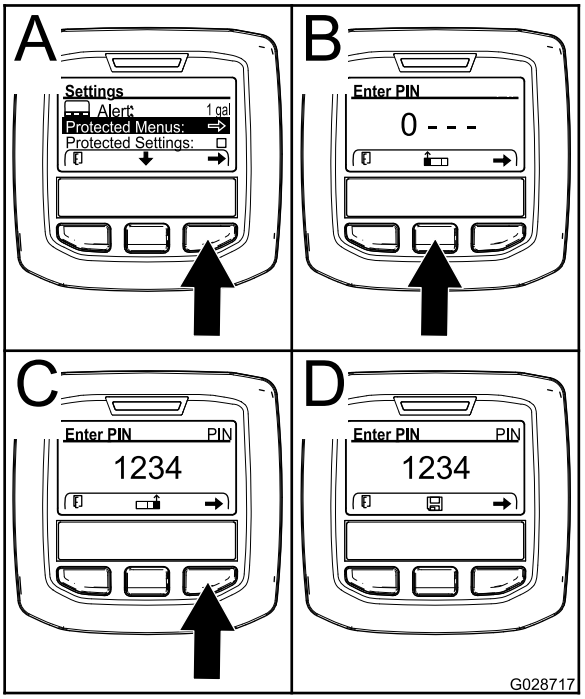

g028717

Figure 71

4. Press the right select button to select Protected Menus (Figure 71A).
5. Enter the new PIN into the entry screen by pressing the following selection buttons:
   - Press the center selection button (Figure 71A) to increase the numerical value (0 to 9)
   - Press the right selection button (Figure 71C) to move the cursor to the next numerical position to the right.
6. Once the right-most value is set, press the right selection button.

   Note: The Save icon appears above the center selection button (Figure 71D).
7. Wait until the InfoCenter displays the “value saved message” and the red indicator light illuminates.

Setting the Protect Settings

Important: **Use this function to lock and unlock the application rate.**

Note: You must know the 4-digit PIN number to change settings for functions in the protected menus.

1. From the Main Menu, press the center selection button to navigate to the Settings menu.
2. Press the center selection button to highlight the Protect Settings entry.

   Note: If there is no X in the box to the right of Protect Settings entry, the sub-menus for L Boom, C Boom, R Boom, and Reset Defaults are not locked with the PIN (Figure 73).

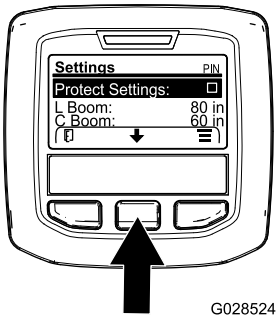

g028524

Figure 72

3. Press the right selection button.

   Note: The PIN entry screen appears
4. Enter the PIN; refer to step 4 in Entering the PIN into the InfoCenter (page 46).
5. Once the right-most value is set, press the right selection button.

   Note: The checkmark icon appears above the center selection button.
6. Press the center selection button.

   Note: The sub-menus for L Boom, C Boom, R Boom, and Reset Defaults appears.
7. Press the center selection button to highlight the Protect Settings entry
8. Press the right selection button.

   Note: An X appears in the box to the to the right of Protect Settings entry (Figure 73).

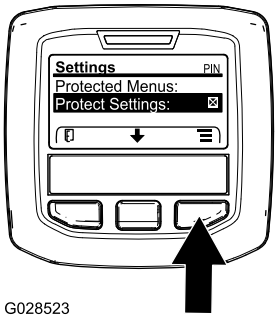

g028523

Figure 73

9. Wait until the InfoCenter displays the “value saved message” and the red indicator light illuminates.

   Note: The sub-menus below the Protected Menus entry are locked with the PIN.

   Note: To access the sub-menus, highlight the Protect Settings entry, press the right selection button, enter the PIN, and when the check-mark icon appears—press the center selection button.

Resetting the Boom Section Sizes to Default

1. Press the center selection button to navigate to the Reset Default entry (Figure 74).

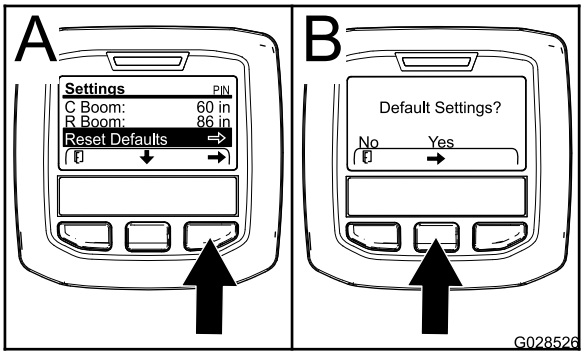

g028526

Figure 74

2. Press the right selection button to select Reset Default.
3. In the Default Settings screen, press the left selection button for NO or the right selection button for YES (Figure 74).

   Note: Selecting YES restores the boom-section sizes to the factory setting.

InfoCenter Advisories

Operator advisories automatically display on the InfoCenter screen when a machine function requires additional action. For example, if you attempt to start the engine while pressing the traction pedal, an advisory displays indicating that the traction pedal must be in the NEUTRAL position.

For each advisory that occurs, the fault indicator flashes, and an advisory code (number), an advisory description, and an advisory qualifier appears on the screen as shown in Figure 75.

Advisory descriptions and qualifiers appear as InfoCenter icons. Refer to InfoCenter Icons (page 42) for a description of each icon.

Note: An advisory qualifier explains the conditions that triggered the advisory and provides instructions on eliminating the advisory.

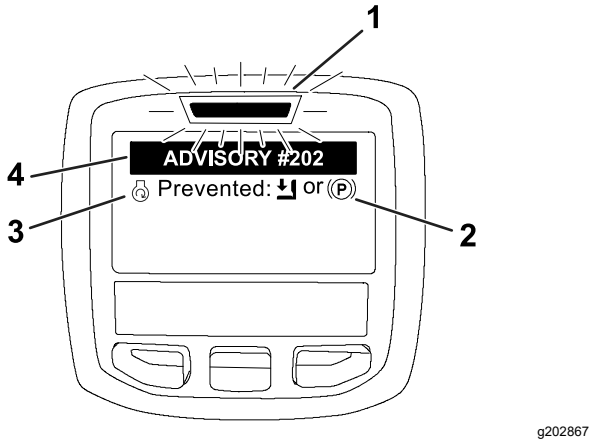

Figure 75

1. Fault indicator
2. Advisory qualifier
3. Advisory description
4. Advisory code

Note: Advisories do not log into the fault log.

Note: You can clear an advisory from the display screen by pressing any of the InfoCenter keys.

Refer to the table that follows for the InfoCenter advisories:

Advisories

Advisory Code	Description
200	Start prevented—pump switch active
201	Start prevented—not in NEUTRAL
202	Start prevented—out of seat
203	Start prevented—throttle pedal is not home
204	Start prevented—starter engage timeout
205	Parking brake is engaged
206	Pump start prevented—boom active

Advisories (cont'd.)

Advisory Code	Description
207	Pump start prevented—engine speed high
208	Throttle/speed lock prevented—pump is not active
209	Throttle lock prevented—parking brake is not engaged
210	Speed lock prevented—operator not in seat or parking brake is engaged
211	Throttle/speed lock prevented—clutch or service brake is engaged
212	Tank low volume alert
213	Rinse pump ON
220	Flow sensor calibration
221	Flow sensor calibration—fill water in tank and enter volume filled
222	Flow sensor calibration—turn on the pump
223	Flow sensor calibration—turn on all the booms
224	Flow sensor calibration—calibration commenced
225	Flow sensor calibration—calibration complete
226	Flow sensor calibration—exiting calibration mode
231	Speed sensor calibration
232	Speed sensor calibration—fill the fresh-water tank, press next
233	Speed sensor calibration—fill the sprayer half full of water, press next
234	Speed sensor calibration—enter the calibration distance, press next
235	Speed sensor calibration—mark and drive the entered distance with sprayer sections off
236	Speed sensor calibration—speed sensor calibration in progress
237	Speed sensor calibration—speed sensor calibration complete
238	Speed sensor calibration—turn off the booms
241	Calibration out of bounds, using default

Performing Pre-Starting Checks

Check the following items each time you begin use of the sprayer for the day:

- Check the air pressure in the tires.

  Note: The tires of this machine are different than car tires; they require less air pressure to minimize turf compaction and damage.
- Check all fluid levels and add the appropriate amount of specified fluids, if any are found to be low.
- Check the brake pedal operation.
- Check to see that the lights are working.
- Turn the steering wheel to the left and right to check steering response.
- With the engine shut off, check for oil leaks, loose parts, and any other noticeable malfunctions.

If any of the above items are not correct, notify your mechanic or check with your supervisor before taking the sprayer out for the day. Your supervisor may want you to check other items daily, so ask what inspections you are responsible to perform.

Preparing the Sprayer

Selecting a Nozzle

Note: Refer to the nozzle-selection guide that is available through your authorized Toro distributor.

The turret bodies accepts up to 3 different nozzles.

1. Stop the sprayer on a level surface, shut off the engine, engage the parking brake, and remove the key.
2. Set the master section switch to the OFF position and set the spray-pump switch to the OFF position.
3. Rotate the turret of the nozzles in either direction to the correct nozzle.
4. Perform a flow calibration; refer to Calibrating the Sprayer Flow (page 53).

Selecting a Suction Filter

Standard Equipment: 50 mesh suction filter (blue)

Use the suction filter table to identify the screen mesh for the spray nozzles you are using based on chemicals products or solutions with a viscosity equivalent to water.

Suction Filter Table

Spray Nozzle Color Code (flow rate)	Screen Mesh Size*	Filter Color Code
Yellow (0.2 gpm)	50	Blue
Red (0.4 gpm)	50	Blue
Brown (0.5 gpm)	50 (or 30)	Blue (or green)
Gray (0.6 gpm)	30	Green
White (0.8 gpm)	30	Green
Blue (1.0 gpm)	30	Green
Green (1.5 gpm)	30	Green
*The mesh size of the suction filters in this table are based on spray chemicals or solutions with the viscosity equivalent to water.		

Important: **When you spray with higher viscosity (thicker) chemical products or solutions with wettable powders, you may need to use a coarser screen mesh for the optional suction filter; refer to Figure 76.**

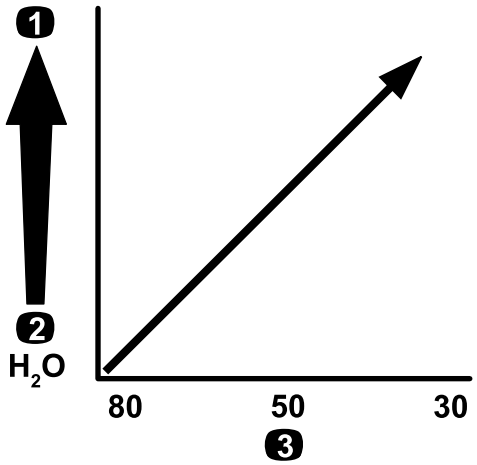

g214212

Figure 76

Mesh size—chemical or solution viscosity

1. Higher-viscosity chemicals or solutions
2. Lower-viscosity chemicals or solutions
3. Screen mesh size

When you spray at a higher application rate, consider using a coarser optional suction-filter mesh; refer to Figure 77.

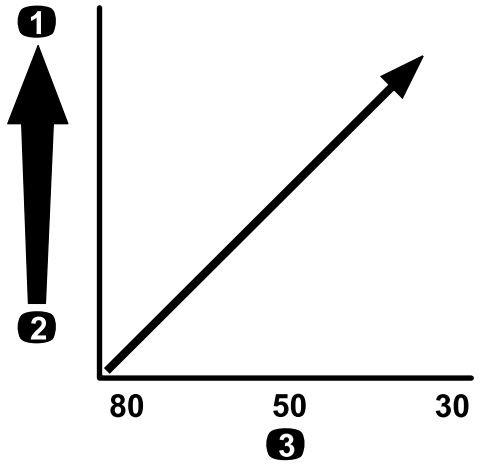

g214214

Figure 77

Mesh size—application rate

1. Higher application rate
2. Lower application rate
3. Screen mesh size

Selecting a Pressure Filter

Available screen sizes include:

Standard Equipment: 50 mesh suction filter (blue)

Use the pressure filter table to identify the screen mesh for the spray nozzles you are using based on chemicals products or solutions with a viscosity equivalent to water.

Pressure Filter Table

Spray Nozzle Color Code (flow rate)	Screen Mesh Size*	Filter Color Code
As required for low viscosity chemicals or solutions or low application rates	100	Green
Yellow (0.2 gpm)	80	Yellow
Red (0.4 gpm)	50	Blue
Brown (0.5 gpm)	50	Blue
Gray (0.6 gpm)	50	Blue
White (0.8 gpm)	50	Blue
Blue (1.0 gpm)	50	Blue
Green (1.5 gpm)	50	Blue
As required for high viscosity chemicals or solutions or high application rates	30	Red

Pressure Filter Table (cont'd.)

Spray Nozzle Color Code (flow rate)	Screen Mesh Size*	Filter Color Code
As required for high viscosity chemicals or solutions or high application rates	16	Brown
*The mesh size of the pressure filters in this table are based on spray chemicals or solutions with the viscosity equivalent to water.		

Important: **When you spray with higher viscosity (thicker) chemical products or solutions with wettable powders, you may need to use a coarser screen mesh for the optional pressure-filter; refer to Figure 78.**

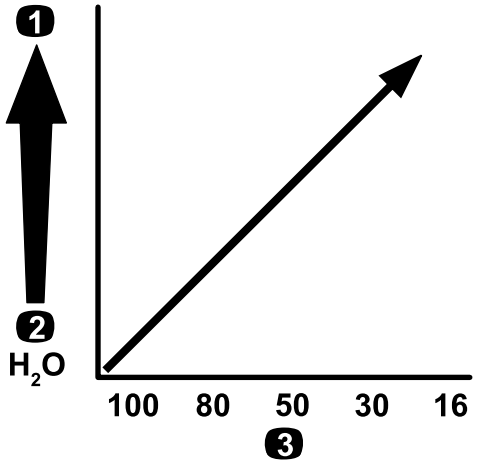

g214211

Figure 78

Mesh size—chemical or solution viscosity

1. Higher-viscosity chemicals or solutions
2. Lower-viscosity chemicals or solutions
3. Screen mesh size

When you spray at a higher application rate, consider using a coarser optional pressure-filter mesh; refer to Figure 79.

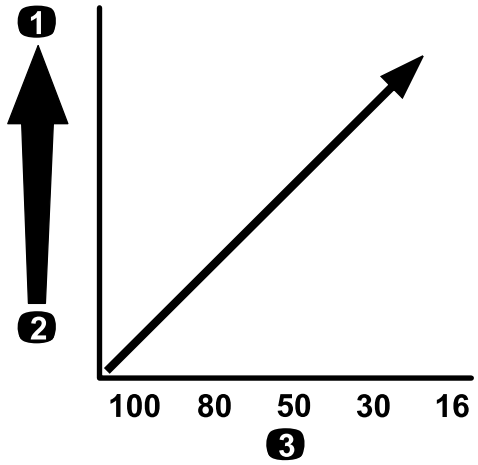

g214240

Figure 79

Mesh size—application rate

1. Higher application rate
2. Lower application rate
3. Screen mesh size

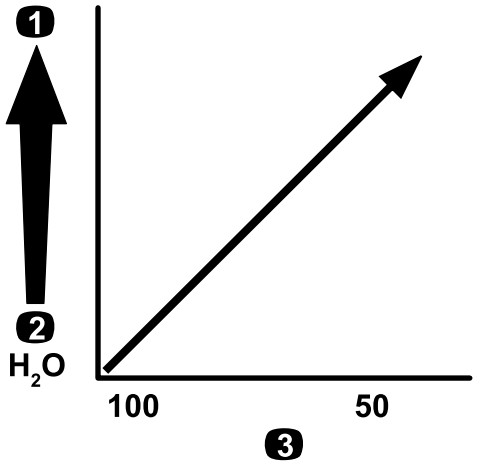

g214246

Figure 80

Mesh size—chemical or solution viscosity

1. Higher-viscosity chemicals or solutions
2. Lower-viscosity chemicals or solutions
3. Screen mesh size

Selecting a Nozzle-Tip Filter (Optional)

Note: The use the optional nozzle-tip filter to protect the spray-nozzle tip and increase its service life.

Use the nozzle-tip filter table to identify the screen mesh for the spray nozzles you are using based on chemicals products or solutions with a viscosity equivalent to water.

Nozzle-Tip Filter Table

Spray Nozzle Color Code (flow rate)	Filter Mesh Size*	Filter Color Code
Yellow (0.2 gpm)	100	Green
Red (0.4 gpm)	50	Blue
Brown (0.5 gpm)	50	Blue
Gray (0.6 gpm)	50	Blue
White (0.8 gpm)	50	Blue
Blue (1.0 gpm)	50	Blue
Green (1.5 gpm)	50	Blue
*The mesh size of the nozzle filters in this table are based on spray chemicals or solutions with the viscosity equivalent to water.		

Important: **When you spray with higher viscosity (thicker) chemical products or solutions with wettable powders, you may need to use a coarser screen mesh for the optional tip-filter; refer to Figure 80.**

When you spray at a higher application rate, consider using a coarser tip-filter mesh; refer to Figure 81.

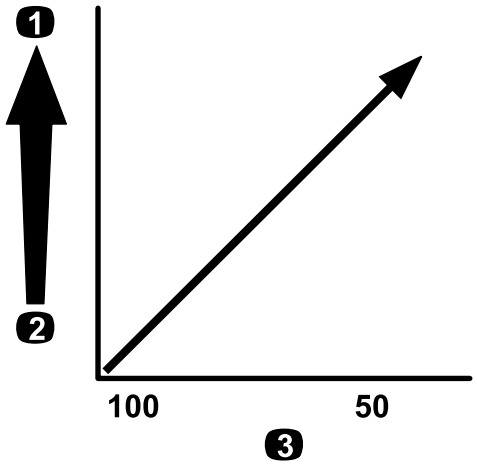

g214245

Figure 81

Mesh size—application rate

1. Higher application rate
2. Lower application rate
3. Screen mesh size

Filling the Tanks

Filling the Freshwater Tank

Important: **Do not use reclaimed water (gray water) in the freshwater tank.**

Note: The freshwater tank is used to supply a source of fresh water for you to wash chemicals off your skin, eyes, or other surfaces in the case of accidental exposure.

Always fill the freshwater tank with clean water before handling or mixing any chemicals.

The freshwater tank is located on the ROPS, behind the passenger seat (Figure 82). It supplies a source of fresh water for you to wash chemicals from your skin, eyes, or other surfaces in case of accidental exposure.

- To fill the tank, unscrew the cap on the top of the tank and fill the tank with fresh water. Replace the cap.
- To open the freshwater tank spigot, turn the lever on the spigot.

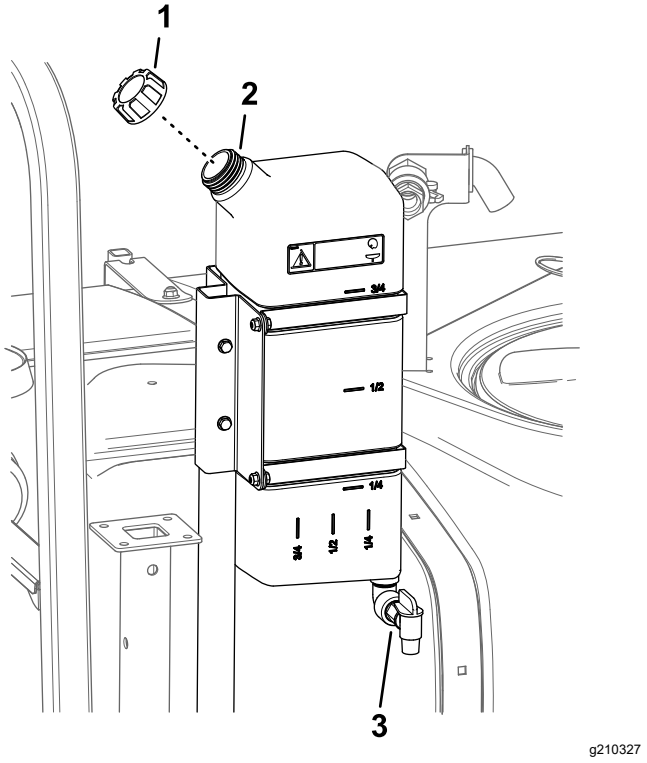

Figure 82

1. Filler cap
2. Freshwater tank
3. Spigot

Filling the Spray Tank

Install the Chemical Pre-Mix Kit for optimal mixing and exterior tank cleanliness.

Important: **Whenever possible, do not use reclaimed water (gray water) in the spray tank.**

Important: **Ensure that the chemicals you use are compatible for use with Viton™ (see the manufacturer's label; it should indicate if it is not compatible). Using a chemical that is not compatible with Viton™ degrades the O-rings in the sprayer, causing leaks.**

Important: **After filling the tank for the first time, check the tank straps for any play. Tighten them as necessary.**

1. Purge the spray system of spray-system conditioner by running the sections.
2. Park the machine on a level surface, move the range selector to the neutral position, engage the parking brake, shut off the engine, and remove the key.
3. Ensure that the tank drain valve is closed.
4. Determine the amount of water needed to mix the amount of chemical you need as prescribed by the chemical manufacturer.
5. Open the tank cover on the spray tank.

   Note: The tank lid is located at the center of the top of the tank. To open it, turn the front half of the cover counterclockwise and swing it open. You can remove the strainer inside for cleaning. To seal the tank, close the cover and rotate the front half clockwise.
6. Add 3/4 of the required water to the spray tank using the anti-siphon fill receptacle.

   Important: **Always use fresh, clean water in the spray tank. Do not pour concentrate into an empty tank.**

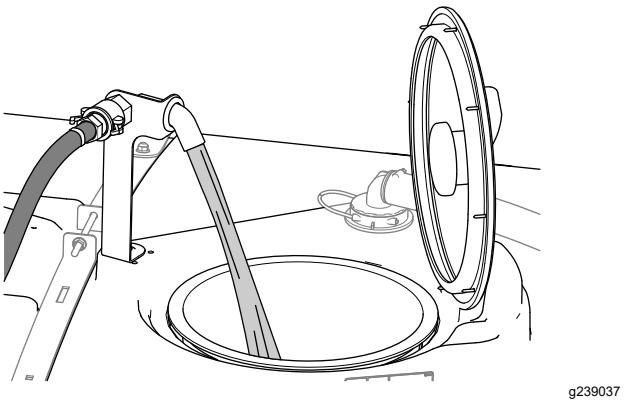

Figure 83

7. Start the engine, engage the PTO, and set the hand throttle if equipped.
8. Turn the agitation switch ON position.
9. Add the proper amount of chemical concentrate to the tank, as directed by the chemical manufacturer.

Important: **If you are using a wettable powder, mix the powder with a small amount of water to form a slurry before adding it to the tank**

10. Add the remaining water to the tank.

    Note: For better agitation, decrease the application rate setting.

Inspecting the Tank Straps

Service Interval: Before each use or daily—Check the tank straps.

Important: **Overtightening the tank strap fasteners can result in deforming and damaging the tank and straps.**

1. Fill the main tank with water.
2. Check to see if there is any movement between the tank straps and the tank (Figure 84).

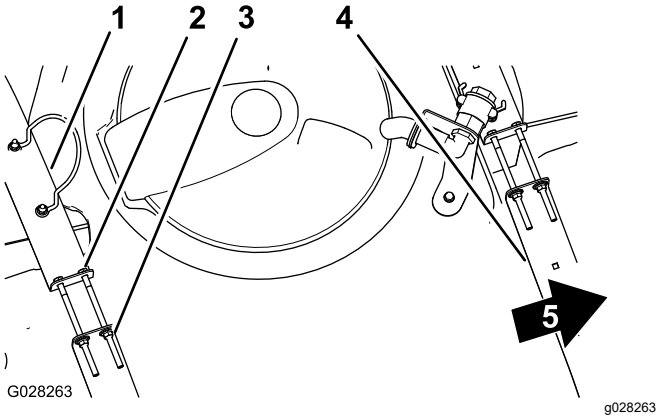

Figure 84

1. Rear tank strap
2. Bolt
3. Flanged locknut
4. Forward tank strap
5. Front of the machine

3. If the tank straps fit loose to the tank, tighten the flanged locknuts and bolts at the top of straps until the straps are flush with the surface of the tank (Figure 84).

   Note: Do not overtighten the tank strap hardware.

Calibrating the Sprayer

Preparing the Machine

Important: **Before calibrating the sprayer system used on the HDX-Auto model, fill the sprayer tank as required with clean water and operate the machine while spraying at 2.75 bar (40 psi) or greater for a minimum of 30 minutes.**

Note: Before using the sprayer for the first time, if you change the nozzles, or as needed, calibrate the sprayer flow, speed, and section bypass.

1. Fill the spray tank with clean water.

   Note: Ensure that there is enough water in the tank to complete each of the calibration procedures.
2. Lower the left and right boom sections.
3. For the **HDX-Auto model**—operate the machine while spraying at 2.75 bar (40 psi) or greater for a minimum of 30 minutes. Fill the sprayer tank with clean water when finished.
4. Set the protected settings to off; refer to Setting the Protect Settings (page 47).
5. For the **HDX-Auto model**—set the sprayer system to the Manual Mode; refer to Switching between Manual Mode and Automatic Mode (page 43).

Calibrating the Sprayer Flow

Operator supplied equipment: Stopwatch capable of measuring to ± 1/10 second and a container graduated in 50 ml (1 fl oz) increments.

Note: Calibrating the sprayer flow for **machines without a throttle lock** requires 2 people.

Preparing the Sprayer System

1. Set the transmission as follows:
   - For HD-Series Models with a **manual transmission**—shift the transmission to the NEUTRAL position.
   - For the **HDX-Auto model**—shift the transmission to P (park).
2. Engage the parking brake and start the engine.
3. Turn on the sprayer pump and turn on the agitation.
4. Press down on the accelerator pedal until the engine reaches maximum speed.
5. Set the engine speed as follows:
   - For machines **without** the optional throttle lock—have 1 person press down on the accelerator pedal until the engine reaches maximum speed.

     Note: Have the other person collect samples from the sprayer nozzles.
   - For machines **with** the optional throttle lock, press down on the accelerator pedal until the engine reaches maximum speed and set the

throttle lock; refer to operation instructions for your Workman hand throttle kit.

Performing a Catch Test

1. Set all 3 section switches and the master-section switch to the ON position.
2. Prepare to perform a catch test using the graduated container.
3. Start at 2.75 bar (40 psi) and use the application-rate switch to adjust the spray pressure so that a catch test yields the amounts listed in the table that follows.

   Note: Collect 3 samples at 15 seconds each and average the quantities of water collected.

Nozzle Color	Milliliters collected in 15 seconds	Ounces collected in 15 seconds
Yellow	189	6.4
Red	378	12.8
Brown	473	16.0
Gray	567	19.2
White	757	25.6
Blue	946	32.0
Green	1,419	48.0

4. Once the catch test has yielded the amounts listed in the table above, set the supervisor rate-lockout switch to the LOCK position.
5. Turn the master-section switch to the OFF position.

Setting the InfoCenter

1. On the InfoCenter, navigate to the Calibration menu and select FLOW CAL as follows:

   Note: Selecting the Home Screen icon at any time cancels calibrations.

   A. Press the center selection button on the InfoCenter twice to access the menus.

   B. Enter the calibration menu by pressing the right selection button on the InfoCenter.

   C. Select FLOW CAL by highlighting FLOW CAL and press the right selection button on the InfoCenter.

   D. In the next screen, enter the known quantity of water that will be sprayed out of the sections for the calibration procedure; refer to the chart below.

   E. Press the right selection button on the InfoCenter.

2. Using the plus (+) and minus (-) symbols, enter the flow volume according to the table below.

Nozzle Color	Liters	US Gallons
Yellow	42	11
Red	83	22
Brown	106	28
Gray	125	33
White	167	44
Blue	208	55
Green	314	83

3. Turn on the master-section switch for 5 minutes.

   Note: As the machine sprays, the InfoCenter displays the quantity of fluid that it is counting.

4. After spraying for 5 minutes, select the checkmark by pressing the center button on the InfoCenter.

   Note: It is acceptable if the gallons displayed during the calibration process do not match the known quantity of water entered into the InfoCenter.

5. Shut off the master-section switch and select the checkmark by pressing the center button on the InfoCenter.

   Note: Calibration is now complete.

Calibrating the Sprayer Speed

1. Ensure that the sprayer tank is filled with water.
2. On an open, flat area, mark off a distance between 45 to 152 m (150 to 500 ft).

   Note: Mark off 152 m (500 ft) for more accurate results.

3. Start the engine and drive to the start of the marked-off distance.

   Note: Align the center of the front tires with the starting line for the most accurate measurement.

4. On the InfoCenter, navigate to the Calibration menu and select Speed Calibration.

   Note: Selecting the Home Screen icon at any time cancels the calibration.

5. Select the Next arrow (→) on the InfoCenter.
6. Using the plus (+) and minus (-) symbols, enter the marked-off distance into the InfoCenter.
7. Perform one of the following:
   - For HD-Series Models with a **manual transmission**—shift the machine into first

gear and drive the marked distance in a straight line at full throttle.

- For the **HDX-Auto model**,—shift the machine into D (drive) and drive the marked distance in a straight line at full throttle.

8. Stop the machine at the marked-off distance and select the checkmark on the InfoCenter.

   Note: Slow down and roll to a stop to align the center of the front tires with the finish line, for the most accurate measurement.

   Note: Calibration is now complete.

Calibrating the Section-Bypass Valves

Before using the sprayer for the first time, whenever you change the nozzles, or as needed, calibrate the sprayer flow, speed, and set the section bypass.

Important: **Select an open flat area to perform this procedure.**

Note: Calibrating the section bypass for **machines without a throttle lock** requires 2 people.

Preparing the Machine

1. Ensure that the sprayer tank is filled with water.
2. Set the transmission as follows:
   - For HD-Series Models with a **manual transmission**—shift the transmission to the NEUTRAL position.
   - For the **HDX-Auto model**—shift the transmission to P (park).
3. Engage the parking brake and turn the engine on.
4. Set the 3 section switches to the ON position, but leave the master-section switch in the OFF position.
5. Set the pump switch to the ON position, and turn on the agitation.
6. Set the engine speed as follows:
   - For machines **without** the optional throttle lock—have 1 person press down on the accelerator pedal until the engine reaches maximum engine speed.

     Note: Have the other person adjust the section-bypass valves.
   - For machines **with** the optional throttle lock, press down on the accelerator pedal until the engine reaches maximum engine speed and set the throttle lock; refer to operation instructions for your Workman hand throttle kit.
7. On the InfoCenter, navigate to the Calibration menu and select Test Speed.

   Note: Selecting the Home Screen icon at any time cancels calibration.
8. Using the plus (+) and minus (–) symbols, enter a test speed of 5.6 km/h (3.5 mph), then select the Home icon.

Adjusting the Section Bypass Valves

1. Using the application rate switch, adjust the application rate according to the table that follows.

Nozzle Application Rate Table

Nozzle Color	SI (Metric)	English	Turf
Yellow	159 L/ha	17 gpa	0.39 gpk
Red	319 L/ha	34 gpa	0.78 gpk
Brown	394 L/ha	42 gpa	0.96 gpk
Gray	478 L/ha	51 gpa	1.17 gpk
White	637 L/ha	68 gpa	1.56 gpk
Blue	796 L/ha	85 gpa	1.95 gpk
Green	1,190 L/ha	127 gpa	2.91 gpk

2. Turn off the left-section switch and adjust the left section-bypass valve (Figure 85) until the pressure reading is at the previously adjusted level (typically 2.75 bar or 40 psi).

   Note: The numbered indicators on the bypass valve are for reference only.

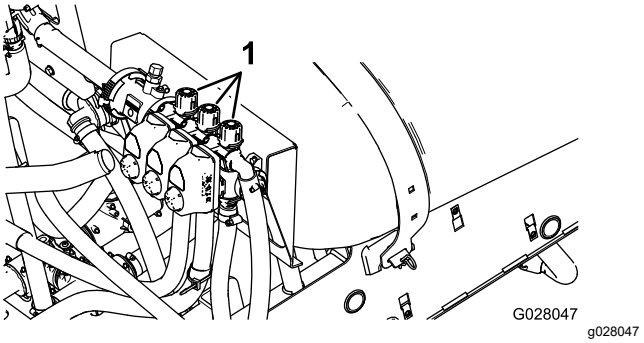

Figure 85

1. Section-bypass adjustment

3. Turn on the left-section switch and turn off the right-section switch.
4. Adjust the right section-bypass valve (Figure 85) until the pressure reading is at the previously adjusted level (typically 2.75 bar or 40 psi).
5. Turn on the right-section switch and turn off the center-section switch.

6. Adjust the center section-bypass valve (Figure 85) until the pressure reading is at the previously adjusted level (typically 2.75 bar or 40 psi).
7. Turn all the section switched off.
8. Turn the spray pump off.

   Note: Calibration is now complete.

Adjusting the Agitation and Master Bypass Valves

Agitation Bypass Valve Knob Positions

- The agitation bypass valve is in the fully Open position as shown in Figure 86A.
- The agitation bypass valve is in the Closed (0) position as shown in Figure 86B.
- The agitation bypass valve is in an intermediate (adjusted relative to the pressure gauge for the sprayer system) position as shown in Figure 86C.

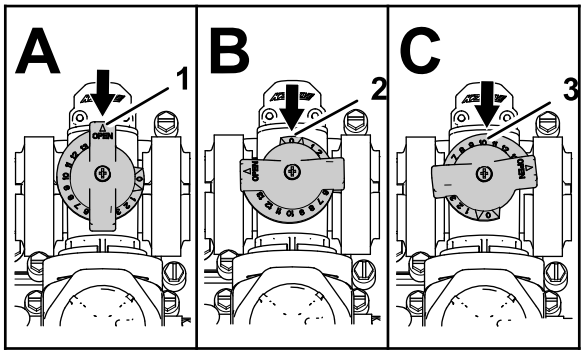

g214029

Figure 86

1. Open
2. Closed (0)
3. Intermediate position

Calibrating the Agitation Bypass Valve

Service Interval: Yearly

Important: **Select an open flat area to perform this procedure.**

Note: Calibrating the agitation bypass valve for **machines without a throttle lock** requires 2 people.

1. Ensure that the sprayer tank is filled with water.
2. Verify the agitation-control valve is open. If it has been adjusted, open it completely at this time.
3. Set the transmission as follows:
   - For HD-Series Models with a **manual transmission**—shift the transmission to the NEUTRAL position.
   - For the **HDX-Auto model**—shift the transmission to P (park).
4. Engage the parking brake and turn the engine on.
5. Turn on the sprayer pump.
6. Set the engine speed as follows:
   - For machines **without** the optional throttle lock—have 1 person press down on the accelerator pedal until the engine reaches maximum speed.

     Note: Have the other person collect samples from the sprayer nozzles.
   - For machines **with** the optional throttle lock, press down on the accelerator pedal until the engine reaches maximum speed and set the throttle lock; refer to operation instructions for your Workman hand throttle kit.
7. Set the 3 individual section-valve switches to the OFF position.
8. Set the master-section switch to the ON position.
9. Set the system pressure to MAXIMUM.
10. Press the agitation switch to the OFF position and read the pressure gauge.
    - If the reading remains at 6.9 bar (100 psi) the agitation bypass valve is properly calibrated.
    - If the pressure gauge reads differently continue to the next step.
11. Adjust the agitation bypass valve (Figure 87) on the backside of the agitation valve until the pressure reading on the gauge is 6.9 bar (100 psi).

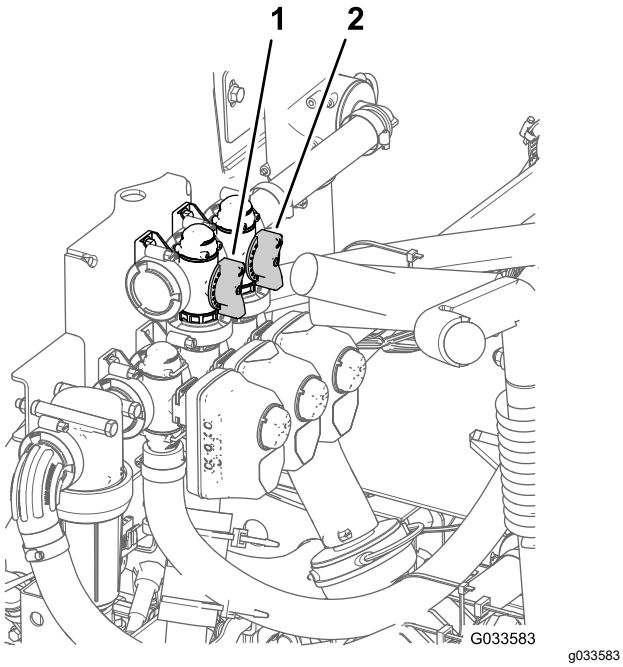

Figure 87

1. Agitation bypass valve
2. Master-section bypass

12. Press the pump switch to the OFF position, shift the throttle lever to the IDLE position, and turn the starter switch to the OFF position.

Adjusting the Master Section-Bypass Valve

Note: Adjusting the master section-bypass valve reduces or increases the amount of flow sent to the agitation nozzles in the tank when the master boom switch is set to the OFF position.

1. Ensure that the sprayer tank is filled with water.
2. Engage the parking brake.
3. Set the transmission as follows:
   - For HD-Series Models with a **manual transmission**—shift the transmission to the NEUTRAL position.
   - For the **HDX-Auto model**—shift the transmission to P (park).
4. Turn on the sprayer pump.
5. Set the agitation switch to the ON position.
6. Set the master-section switch to the OFF position.
7. Set the engine speed as follows:
   - For machines **without** the optional throttle lock—have 1 person press down on the accelerator pedal until the engine reaches maximum speed.

     Note: Have the other person collect samples from the sprayer nozzles.
   - For machines **with** the optional throttle lock, press down on the accelerator pedal until the engine reaches maximum speed and set the throttle lock; refer to operation instructions for your Workman hand throttle kit.
8. Adjust the master section-bypass handle to control the amount of agitation occurring in the tank (Figure 87).
9. Reduce the throttle speed to idle.
10. Set the agitation switch and pump switch to the OFF position.
11. Shut off the engine.

Locating the Spray Pump

The spray pump is located at the back of the machine (Figure 88).

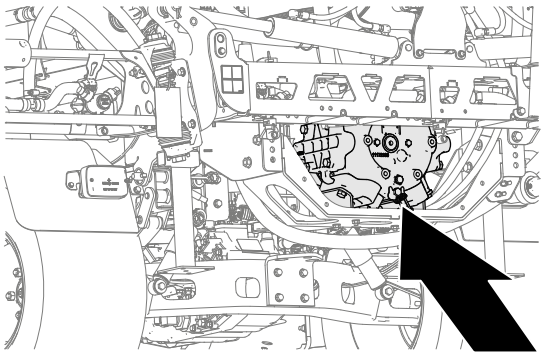

Figure 88

During Operation

During Operation Safety

General Safety

- The owner/operator can prevent and is responsible for accidents that may cause personal injury or property damage.
- Wear appropriate clothing, including eye protection; long pants; substantial, slip-resistant footwear; and hearing protection. Tie back long hair and do not wear loose clothing or loose jewelry.
- Wear appropriate personal protective equipment as directed in Chemical Safety.
- Use your full attention while operating the machine. Do not engage in any activity that causes distractions; otherwise, injury or property damage may occur.

- Do not operate the machine while ill, tired, or under the influence of alcohol or drugs.
- Do not carry more than 1 passenger on the machine; the passenger should sit in the designated seating position only.
- Operate the machine only in good visibility. Avoid holes or hidden hazards.
- Before you start the engine, ensure that you are in the operating position, the transmission is in the NEUTRAL position (manual) or the PARK position (automatic), and the parking brake is engaged.
- Remain seated whenever the machine is in motion. Keep both hands on the steering wheel whenever possible, and always keep your arms and legs within the operator's compartment.
- Use care when approaching blind corners, shrubs, trees, or other objects that may obscure your vision.
- Before backing up, look rearward and ensure that no one is behind you. Back up slowly.
- Never spray while people, especially children, or pets are nearby.
- Do not operate the machine near drop-offs, ditches, or embankments. The machine could suddenly roll over if a wheel goes over the edge or if the edge gives way.
- Reduce the speed when operating on rough terrain, uneven ground, and near curbs, holes, and other sudden changes in terrain. Loads may shift, causing the machine to become unstable.
- Stop the machine, shut off the engine, remove the key, engage the parking brake, and inspect for damage after striking an object or if there is an abnormal vibration in the machine. Make all necessary repairs before resuming operation.
- Slow down and use caution when making turns and crossing roads and sidewalks with the machine. Always yield the right-of-way.
- Use extra caution when operating the machine on wet surfaces, in adverse weather conditions, at higher speeds, or with a full load. Stopping time and distance increase in these conditions.
- Do not touch the engine or muffler while the engine is running or soon after it has shut off. These areas may be hot enough to cause burns.
- Before you leave the operator's position, do the following:
  - Park the machine on a level surface.
  - Shift the transmission into the NEUTRAL position (manual) or the PARK position (automatic).
  - Shut off the spray pump.
  - Engage the parking brake.
  - Shut off the engine and remove the key (if equipped).
  - Wait for all movement to stop.
- Never run an engine in an area where exhaust gasses are enclosed.
- Do not operate the machine when there is the risk of lightning.
- Use accessories and attachments approved by Toro only.

Operating the Sprayer

To operate the Multi Pro WM, first fill the spray tank, then apply the solution to the work area, and finally clean the tank. It is important that you complete all 3 of these steps in succession to avoid damaging the sprayer. For example, do not mix and add chemicals in the spray tank at night and then spray in the morning. This would cause the chemicals to separate and possibly damage the sprayer components.

Important: **The tank markings are for reference only and cannot be considered accurate for calibration.**

⚠ CAUTION

Chemicals are hazardous and can cause personal injury.

- **Read the directions on the chemical labels before handling the chemicals, and follow all manufacturer recommendations and precautions.**
- **Keep chemicals away from your skin. Should contact occur, wash the affected area thoroughly with soap and clean water.**
- **Wear goggles and any other protective equipment recommended by the chemical manufacturer.**

The Multi Pro WM has been specifically designed to have high durability to give it the long sprayer life you need. Different materials have been chosen for specific reasons at different locations on your sprayer to meet this goal. Unfortunately, there is no single material which is perfect for all foreseeable applications.

Some chemicals are more aggressive than others and each chemical interacts differently with various materials. Some consistencies (e.g., wettable powders, charcoal) are more abrasive and lead to higher wear rates. If a chemical is available in a formulation that would provide increased life to the sprayer, use this alternative formulation.

As always, remember to clean your machine and spray system thoroughly after all applications. This ensures that your sprayer has a long and trouble-free life.

Spraying

Using the Sprayer

Important: **To ensure that your solution remains well mixed, use the agitation feature whenever you have solution in the tank. For agitation to work, you must engage the PTO and the engine must be running above an idle. If you stop the vehicle and need the agitation on, place the shift lever in the NEUTRAL position, engage the parking brake, engage the PTO, engage the clutch, and set the hand throttle, if equipped.**

Note: This procedure assumes that the PTO is engaged (HD-series models with a manual transmission) and the section valve calibration is complete.

1. Lower the booms into position.
2. For the HDX-Auto model, set the sprayer-mode switch as following:
   - When using the sprayer in the MANUAL MODE press the switch to the right; refer to Sprayer-Mode Switch (HDX-Auto Model) (page 36).
   - When using the sprayer in the AUTOMATIC MODE press the switch to the left.
3. Set the master-section switch to the OFF position.
4. Set the individual section switches, as needed, to the ON positions.
5. Drive to the location where you plan to spray.
6. Navigate to the Application Rate screen on the InfoCenter and set the desired rate by performing the following steps:
   A. Ensure that the switch for the pump is in the ON position.
   B. For HD-series models with a manual transmission, select the desired gear range.
   C. Begin driving at your target ground speed.
   D. For HD-series models with a manual transmission or with an automatic transmission used in the manual mode, verify that the monitor displays the correct application rate. If needed, adjust the application-rate switch until the monitor displays the desired application rate.

      Note: For HD-series models with an automatic transmission that are operated in the automatic mode, the computer automatically adjusts the sprayer pressure to maintain the application rate.

   E. Return to the location where you are spraying.

7. Set the master-section switch to the ON position and begin spraying.

   Note: When the tank is nearly empty, the agitation may cause foaming in the tank. To prevent this, turn the agitation valve off. Alternatively, you can use an anti-foaming agent in the tank.

8. When finished spraying, set the master-section switch to the OFF position to turn off all spay sections, and disengage the PTO lever (HD-series models with a manual transmission).

Turf Care Precautions while Operating in Stationary Modes

Important: **Under some conditions, heat from the engine, radiator, and muffler can potentially damage grass when operating the sprayer in a stationary mode. Stationary modes include tank agitation, hand spraying with a spray gun, or using a walking boom.**

Use the following precautions:

- **Avoid** stationary spraying when conditions are extremely hot and/or dry, as turf can be more stressed during these periods.
- **Avoid** parking on the turf while stationary spraying. Park on a cart path whenever possible.
- **Minimize** the amount of time that you leave the machine running over any particular area of turf. The extent of damage to the grass depends on both time and temperature.
- **Set the engine speed as low as possible** to achieve the desired pressure and flow. This minimizes the heat generated and the air velocity from the cooling fan.
- **Allow the heat to escape** upward from the engine compartment by raising the seat assemblies during stationary operation rather than being forced out under the vehicle.

Positioning the Spray Sections

The boom-section lift switches on the sprayer control panel allows you to move the outer spray sections between transport position and spray position without leaving the operator's seat. Whenever possible, stop the machine before changing spray section positions.

Setting the Hydraulic Lift Lock

Engage the hydraulic lift lever and lock it to provide hydraulic power for control of the boom lift.

1. Push forward the hydraulic-lift lever (Figure 89 or Figure 90).

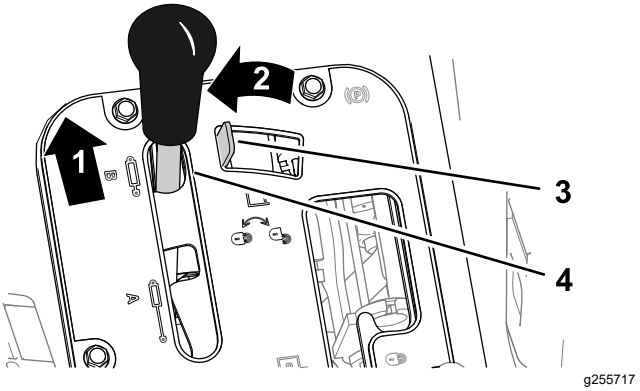

Figure 89

Manual Transmission Workman Vehicles

1. Push forward	3. Hydraulic-lift lock
2. Move left	4. Hydraulic-lift lever

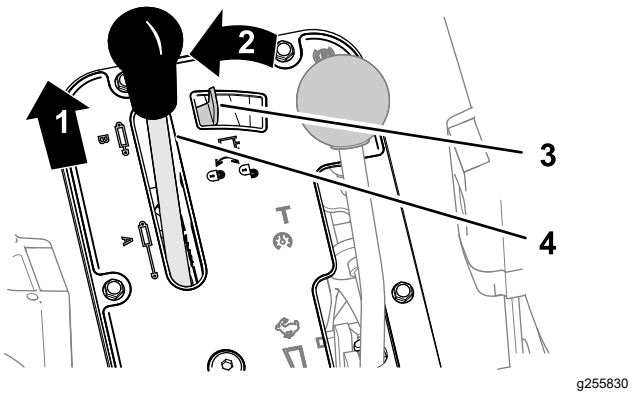

Figure 90

Automatic Transmission Workman Vehicles

1. Push forward	3. Hydraulic-lift lock
2. Move left	4. Hydraulic-lift lever

2. Move the hydraulic-lift lock left to engage the lock (Figure 89 or Figure 90).

Changing the Spray Section Position

Perform the following steps to move the outer spray sections to the SPRAY position:

1. Park the machine on a level surface.
2. Use the boom-section lift switches to lower the outer sections.

   Note: Wait until the outer spray sections reach the full, extended spray position.

Complete the sprayer job, then perform the following steps to retract the outer spray sections into the transport position:

1. Park the machine on a level surface.
2. Use the boom-section lift switches to raise the outer spray sections, until they have moved completely into boom-section transport cradles forming the “X” transport position, and the lift cylinders are fully retracted.

   Important: **Release the boom-section lift switch(es) once the outer spray sections have reached the desired position. Running the actuators against the mechanical stops may damage the lift cylinders and/or other hydraulic components.**

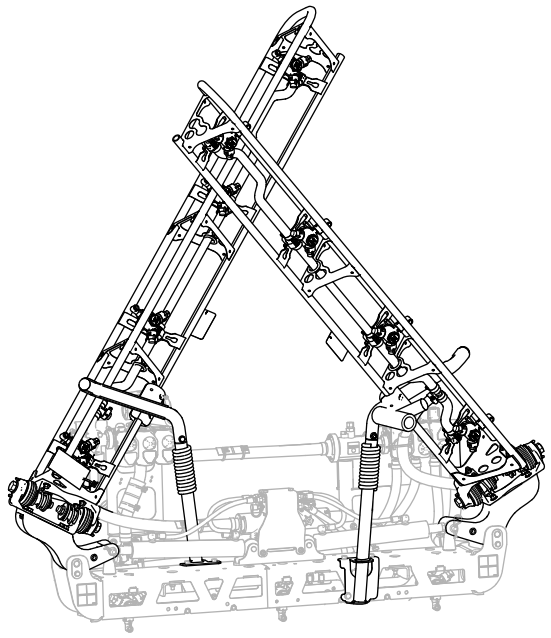

g239336

Figure 91
“X” transport position

Important: **To prevent damage to the lift cylinder, make sure that the actuators are fully retracted before transporting the machine.**

Using the Boom-Section Transport Cradle

The sprayer is equipped with boom-section transport cradles that have a unique safety feature. In the event the spray section accidentally contacts with a low overhead object while in the transport position, you can push the spray section(s) out of the transport cradles. If this occurs, the spray sections come to rest in a near horizontal position to the rear of the machine. While this movement will not damage the spray sections, they should be immediately positioned into the transport cradle.

Important: **The spray sections can be damaged by transporting them in any position other than the “X” transport position using the boom transport cradle.**

To put the outer spray sections back into the transport cradle, lower the spray section(s) to the spray position and then raise the spray section(s) back to the transport position. Make sure that the lift cylinders are fully retracted to prevent damaging the actuator rod.

Spraying Tips

- Do not overlap areas where you have previously sprayed.
- Watch for plugged nozzles. Replace all worn or damaged nozzles.
- Use the master-section switch to stop the spray flow before stopping the sprayer. Once stopped, use the neutral engine speed lock to hold the engine speed up to keep the agitation running.
- You obtain better results if the sprayer is moving when you turn the spray sections on.
- Watch for changes in the application rate that may indicate that your speed has changed beyond the range of the nozzles or there is a problem with the spray system.

HD-Series Models with an Automatic Transmission Operated in the Automatic Mode

Note: Refer to the nozzle selection guide that is available through your authorized Toro distributor.

- If you are operating the sprayer at a slow ground speed that causes the computer to maintain too low of a sprayer system pressure for the application rating of the selected nozzles, the chemical solution discharges from the nozzle incorrectly (running or dribbling). Select a sprayer nozzle with a lower application rate range.
- If you are operating the sprayer at a high ground speed that causes the computer to use full sprayer system pressure and the sprayer pressure is inadequate to achieve the desired application rate. To correct the application rate, slow your ground

speed to achieve your application rate or select a sprayer nozzle with a higher application rate range.

Unclogging a Nozzle

If a nozzle becomes clogged while you are spraying, clean the nozzle as follows:

1. Stop the sprayer on a level surface, shut off the engine, and engage the parking brake.
2. Set the master section switch to the OFF position and then set the sprayer-pump switch to the OFF position.
3. Remove the clogged nozzle and clean it using a spray bottle of water and a toothbrush.
4. Install the nozzle.

After Operation

After Operation Safety

- Park the machine on a level surface; engage the parking brake; shut off the engine; remove the key; and wait for all movement to stop before leaving the machine.
- After you finish operating the machine for the day, wash off all chemical residue from the outside of the machine; refer to Chemical Safety.
- Allow the engine to cool before storing the machine in any enclosure.
- Maintain and clean the seat belt(s) as necessary.
- Never store the machine or fuel container where there is an open flame, spark, or pilot light, such as on a water heater or other appliance.
- Keep all parts of the machine in good working condition and all hardware tightened.
- Replace all worn, damaged, or missing decals.

Cleaning the Sprayer System

Important: **Do not use brackish or reclaimed water to clean the machine.**

Draining the Sprayer Tank

1. Park the machine on a level surface, engage the parking brake, shut off the engine, and remove the key.
2. Locate the tank drain valve on the right side of the machine (Figure 92).

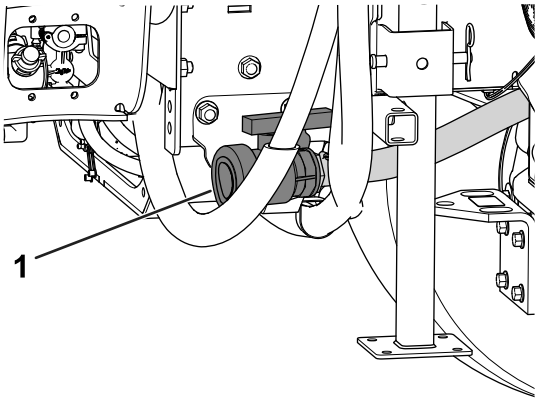

g208238

Figure 92

1. Tank-drain valve

3. Open the valve to drain all unused material from the tank (Figure 93).

Important: **Dispose of all waste chemicals according to local codes and the material manufacturer's instructions.**

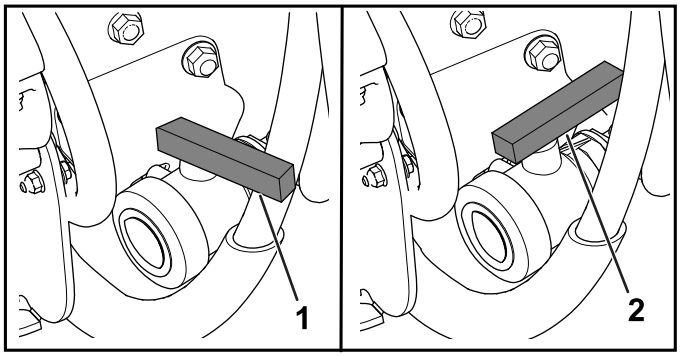

Figure 93

1. Valve closed
2. Valve open

4. Close the drain valve (Figure 93).

Cleaning the Sprayer

Important: **You must always empty and clean the sprayer immediately after each use. Failure to do so may cause the chemicals to dry or thicken in the lines, clogging the pump and other components.**

Use the approved rinse kit for this machine. Contact your authorized Toro distributor for more information.

Clean the spray system after **each** spraying session. To thoroughly clean the spray system, do the following:

- Use 3 separate rinses.
- Use the cleaners and neutralizers as recommended by the chemical manufacturers.
- Use pure clean water (no cleaners or neutralizers) for the **last** rinse.

1. Fill the tank with at least 190 L (50 US gallons) of clean fresh water and close the cover.

   Note: You can use a cleaning/neutralizing agent in the water as needed. On the final rinse, use only clean, clear water.
2. Lower the booms into the spray position.
3. Start the engine and set the pump switch to the ON position.
4. Move the throttle to a higher idle.
5. Ensure that the agitation switch is in the ON position and use the application-rate switch to increase the pressure to a high setting.
6. Set the master-section switch and individual section switches to the ON positions to begin spraying.
7. Allow all the water in the tank to spray out though the nozzles.
8. Check the nozzles to ensure that they are all spraying correctly.
9. Set the master-section switch to the OFF position, shut off the sprayer pump, and shut off the engine.
10. Repeat steps 1 through 9 at least 2 more times to ensure that the spray system is fully cleaned.

    Important: **You must always complete this procedure at least 3 times to ensure that the spray system is fully clean, preventing damage to the system.**
11. Clean the suction filter and pressure filter; refer to Cleaning the Suction Filter (page 63) and Cleaning the Pressure Filter (page 64).

    Important: **If you used wettable powder chemicals, clean the strainer after each tank.**
12. Using a garden hose, rinse off the outside of the sprayer with clean water.
13. Remove the nozzles and clean them by hand. Replace damaged or worn nozzles.

Cleaning the Suction Filter

Service Interval: Before each use or daily—Clean the suction filter. Clean the suction filter (more often when using wettable powders).

1. Park the machine on a level surface, engage the parking brake, shut off the pump, shut off the engine, and remove the key.
2. At the top of the sprayer tank, remove the retainer that secures the hose fitting attached to the large hose from the filter housing (Figure 94).

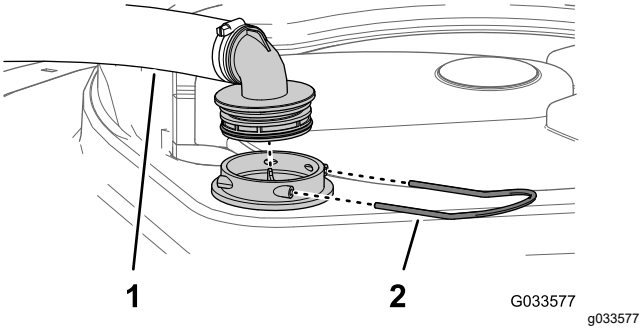

Figure 94

1. Suction hose
2. Retainer

3. Remove the hose and hose fitting from the filter housing (Figure 94).
4. Pull the suction strainer out of the filter housing in the tank (Figure 95).

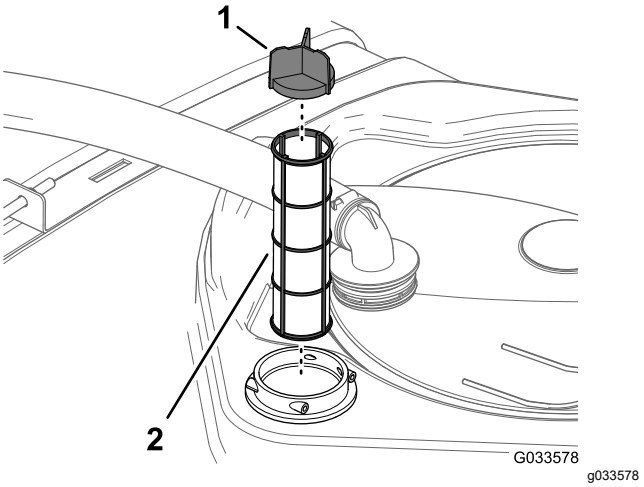

Figure 95

1. Screen vane
2. Suction strainer

5. Clean the suction filter with clean water.

   Important: **Replace the filter if it is damaged or cannot be cleaned.**

6. Insert the suction filter into the filter housing until the filter is fully seated.
7. Align the hose and hose fitting to the filter housing at the top of the tank, and secure fitting and housing with the retainer that you removed in step 2.

Cleaning the Pressure Filter

Service Interval: Before each use or daily—Clean the pressure filter. Clean the pressure filter (more often when using wettable powders).

1. Park the machine on a level surface, engage the parking brake, shut off the sprayer pump, shut off the engine, and remove the key.
2. Align a drain pan under the pressure filter (Figure 96).

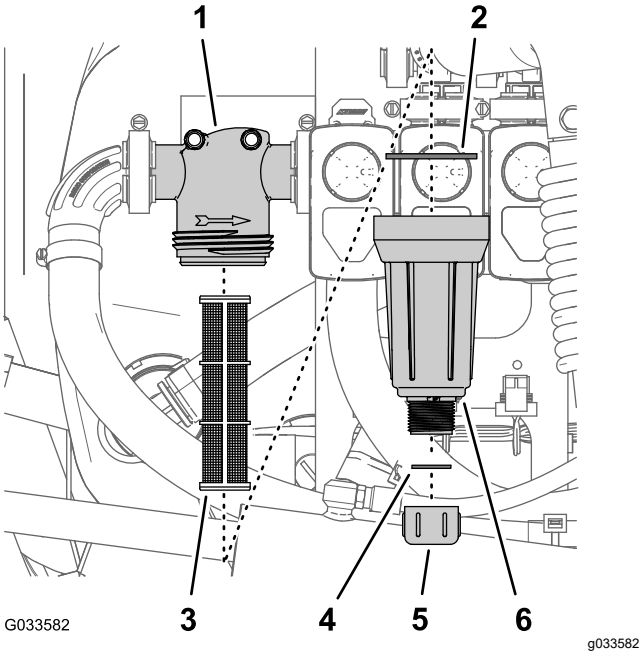

Figure 96

1. Filter head
2. Gasket (bowl)
3. Filter element
4. Gasket (drain plug)
5. Drain cap
6. Bowl

3. Rotate the drain cap counterclockwise and remove it from the bowl of the pressure filter (Figure 96).

   Note: Allow the bowl to drain completely.

4. Rotate the bowl counterclockwise and remove the filter head (Figure 96).
5. Remove the pressure filter element (Figure 96).
6. Clean the pressure filter element with clean water.

   Important: **Replace the filter if it is damaged or cannot be cleaned.**

7. Check the gasket for the drain plug (located inside the bowl) and the gasket for bowl (located inside the filter head) for damage and wear (Figure 96).

   Important: **Replace any damaged or worn gaskets for the plug, bowl, or both.**

8. Install the pressure filter element into the filter head (Figure 96).

   Note: Ensure that the filter element is firmly seated into the filter head.

9. Install the bowl onto the filter head, and tighten by hand (Figure 96).
10. Assemble the drain cap onto the fitting at the bottom of the bowl, and tighten the cap by hand (Figure 96).

Cleaning the Nozzle Filter

1. Park the machine on a level surface, engage the parking brake, shut off the sprayer pump, shut off the engine, and remove the key.
2. Remove the nozzle from the spray turret (Figure 97).

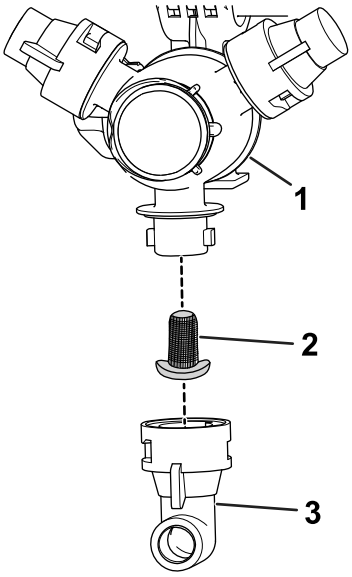

Figure 97

1. Spray turret
2. Nozzle filter
3. Nozzle

3. Remove the nozzle filter (Figure 97).
4. Clean the nozzle filter with clean water.

   Important: **Replace the filter if it is damaged or cannot be cleaned.**

5. Install the nozzle filter (Figure 97).

   Note: Ensure that the filter is fully seated.

6. Install the nozzle onto the spray turret (Figure 97).

Conditioning the Spray System

Service Interval: After each use—Condition the spray system at the end of each daily use.

Conditioner Specification

Conditioner specification: propylene glycol "non-toxic RV antifreeze" with corrosion inhibitor

Important: **Use only propylene glycol with corrosion inhibitor.**

Do not use recycled propylene glycol. Do not use ethylene glycol base antifreeze.

Do not use propylene glycol with soluble alcohols (methanol, ethanol, or isopropanol) or brines added.

Preparing the Conditioner

1. Move the machine to a level surface, set the parking brake, shut off the engine, and remove the key.
2. Add conditioner to the tank as follows:
   - For ready to use (premixed) propylene glycol RV antifreeze—add 10 gallons of propylene glycol RV antifreeze to the tank.
   - For concentrated propylene glycol RV antifreeze, perform the following steps:
     A. Add a 10 gallon mixture of propylene glycol RV antifreeze and water into the sprayer tank. Prepared the antifreeze mixture as instructed manufacturer for a concentration rated for -45°C (-50°F) minimum.

        Important: **Use only clean water when cleaning the sprayer.**

     B. Start the engine and set the spray-pump switch to the ON position.
     C. Press the accelerator pedal to increase the engine speed.
     D. Set the agitation switch to the ON position.

        Allow the conditioner and water solution to circulate for 3 minutes or longer.

Spraying the Conditioner

Recommended tool: a clear catch container.

1. Move the machine to the drain pad area and set the parking brake.
2. Lower the outer booms sections.
3. Set the left, center, and right section switches and the master section switch to the ON position.
4. Allow the spray system to spray until the nozzles discharge the conditioner.

   Note: Most propylene glycol RV antifreeze is colored pink. Use the catch container to sample the sprayer discharge at several of the nozzles.
5. Shut off the master section switch, 3 section switches, agitation switch, spray-pump switch, engine, and remove the key.

Transporting or Towing the Machine

For information on transporting or towing the machine, refer to the *Operator's Manual* for your Workman vehicle.

Important: **Tie outer spray sections to the boom-section transport cradles.**

Maintenance

Note: Download a free copy of the electrical or hydraulic schematic by visiting www.Toro.com and searching for your machine from the Manuals link on the home page.

Note: Determine the left and right sides of the machine from the normal operating position.

Maintenance Safety

- Before you leave the operator's position, do the following:
  - Park the machine on a level surface.
  - Shift the transmission into the NEUTRAL position (manual) or the PARK position (automatic).
  - Engage the parking brake.
  - Shut off the engine and remove the key (if equipped).
  - Wait for all movement to stop.
- Allow machine components to cool before performing maintenance.
- Allow only qualified and authorized personnel to maintain, repair, adjust, or inspect the machine.
- Before performing any maintenance, thoroughly clean and rinse the sprayer; refer to Chemical Safety.
- Chemicals used in the sprayer system may be hazardous and toxic to you, bystanders, animals, plants, soils, or other property.
  - Carefully read and follow the chemical warning labels and safety data sheets (SDSs) for all chemicals used, and protect yourself according to the chemical manufacturer's recommendations.
  - Always protect your skin while you are near chemicals. Use the appropriate personal protective equipment (PPE) to guard against contact with chemicals, including the following:
    - ◊ safety glasses, goggles, and/or face shield
    - ◊ a chemical suit
    - ◊ a respirator or filter mask
    - ◊ chemical-resistant gloves
    - ◊ rubber boots or other substantial footwear
    - ◊ a clean change of clothes, soap, and disposable towels for cleanup
  - Refuse to operate or work on the sprayer if chemical safety information is not available.
  - Do not fill, calibrate, or clean the machine while people, especially children, or pets are in the area.
  - Handle chemicals in a well-ventilated area.
  - Have clean water available, especially when filling the spray tank.
  - Do not eat, drink, or smoke while working near chemicals.
  - Do not clean spray nozzles by blowing through them or placing them in your mouth.
  - Always wash your hands and other exposed areas as soon as possible after working with chemicals.
  - Chemicals and fumes are dangerous; never enter the tank or place your head over or in the opening of a tank.
- To ensure that the entire machine is in good condition, keep all hardware properly tightened.
- To reduce the potential for fire, keep the engine area free of excessive grease, chemicals, grass, leaves, and dirt.
- If you must run the engine to perform a maintenance adjustment, keep your hands, feet, clothing, and any parts of your body away from the engine and any moving parts. Keep everyone away.
- Do not adjust the ground speed of the machine. To ensure safety and accuracy, have an authorized Toro distributor check the ground speed.
- If the machine requires a major repair or you need technical help, contact an authorized Toro distributor.
- Modifying this machine in any manner may affect machine operation, performance, durability, or its use, and result in injury or death. Such use could void the product warranty.
- Support the machine with jack stands whenever you work under the machine.
- Carefully release pressure from components with stored energy.

Recommended Maintenance Schedule(s)

Maintenance Service Interval	Maintenance Procedure
Before each use or daily	• Check the tank straps. • Clean the suction filter. • Clean the pressure filter.
After each use	• Condition the spray system at the end of each daily use.
Every 50 hours	• Lubricate the pump.
Every 100 hours	• Lubricate the boom hinges.
Every 200 hours	• Inspect all hoses and connections for damage and proper attachment. • Clean the flow meter (more often when using wettable powders).
Every 400 hours	• Inspect the O-rings in the valve assemblies and replace them if necessary. • Change the suction filter. • Change the pressure filter. • Inspect the pump diaphragm and replace if necessary. • Inspect the pump check valves and replace if necessary. • Inspect the nylon pivot bushings.
Yearly	• Calibrate the agitation bypass valve. • Flush the sprayer with clean water.

Important: **Refer to the *Operator's Manual* for your machine and the engine owner's manual for additional maintenance procedures.**

Daily Maintenance Checklist

Duplicate this page for routine use.

Maintenance Check Item	For the week of:						
	Mon.	Tues.	Wed.	Thurs.	Fri.	Sat.	Sun.
Check the brake and parking brake operation.							
Check the gear shift/neutral operation.							
Check the fuel level.							
Check the engine oil level before filling the tank.							
Check the transaxle oil level before filling the tank.							
Inspect the air filter before filling the tank.							
Inspect the engine cooling fins before filling the tank.							
Check any unusual engine noises.							
Check any unusual operating noises.							
Check the tire pressure.							
Check for fluid leaks.							
Check the instrument operation.							
Check the accelerator operation.							
Clean the suction strainer.							
Check toe-in.							
Lubricate all grease fittings.[1]							
Touch up and damaged paint.							

[1]Immediately after **every** washing, regardless of the interval listed

Notation for Areas of Concern

Inspection performed by:		
Item	**Date**	**Information**
1		
2		
3		
4		
5		
6		
7		
8		
9		
10		

Pre-Maintenance Procedures

⚠ CAUTION

If you leave the key in the starter switch, someone could accidently start the engine and seriously injure you or bystanders.

Remove the key from the starter switch and disconnect the negative battery cable from the battery before you do any maintenance. Set the battery cable aside so that it does not accidentally contact the battery post.

Accessing the Machine

Raising the Tank Assembly

⚠ DANGER

The sprayer tank assembly represents a stored energy hazard. If not properly retained when installing or removing the assembly, it can move or fall and injure you or other bystanders.

Use straps and an overhead lift to support the sprayer tank assembly during installation, removal, or any maintenance whenever you remove the retaining fasteners.

You can raise up the tank assembly to access to the engine and other internal components. Pivot the boom extension forward to distribute the weight more evenly.

1. Empty the spray tank.
2. Park the vehicle on a level surface.
3. Use the boom-control switches to raise the boom extension to approximately 45°.
4. Engage the parking brake, shut off the engine, and remove the key.
5. Remove the safety bolts from the front of the skid (Figure 98).

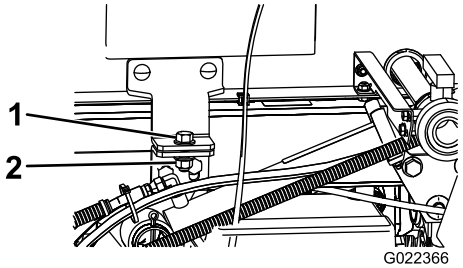

g022366

Figure 98

1. Bolt (1/2 x 1-1/2 inches) 2. Locknut (1/2 inch)

6. Fold the boom extensions forward, alongside the tank assembly to distribute the weight more evenly, and keep it from tipping backward.
7. Raise the tank assembly until the lift cylinders are fully extended.
8. Remove the bed support from the storage brackets at back of the ROPS panel (Figure 99).

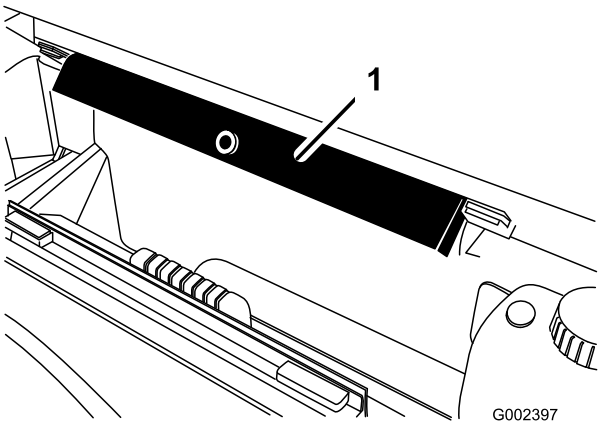

g002397

Figure 99

1. Bed support

9. Push the bed support onto the cylinder rod, making sure that the support end tabs rest on

the end of cylinder barrel and on the rod end of the lift cylinder (Figure 100).

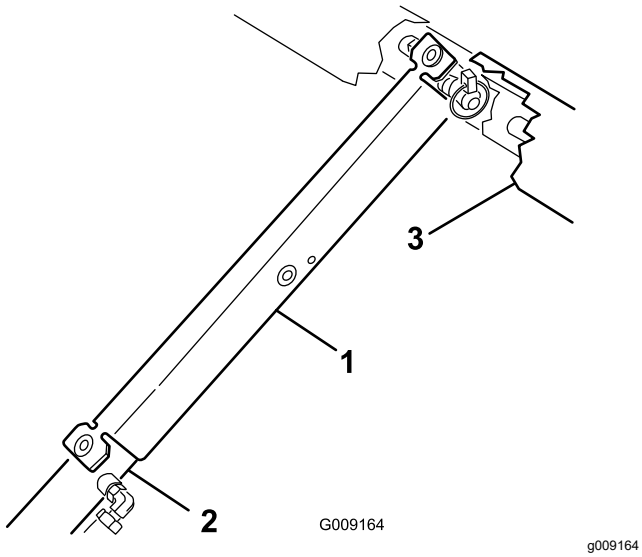

Figure 100

1. Bed support
2. Cylinder barrel
3. Bed

Lowering the Tank Assembly

1. When you are ready to lower the tank assembly, remove the bed support from the cylinder and insert it into the brackets on the back of the ROPS panel.

   Important: **Do not try to lower the tank assembly with the bed safety support on the cylinder.**

2. Retract the lift cylinders to carefully lower the tank to the frame.
3. Install the 2 hold down bolts and fasteners to secure the tank assembly.
4. Fold the boom extensions rearward to the extended position.
5. Use the boom-control switches to raise the boom extensions to the TRANSPORT position.

Lubrication

Greasing the Sprayer Pump

Service Interval: Every 50 hours

Grease Type: Mobil XHP 461

1. Locate the grease fittings on the sprayer pump.

   Note: The pump is located at the rear end of the machine.

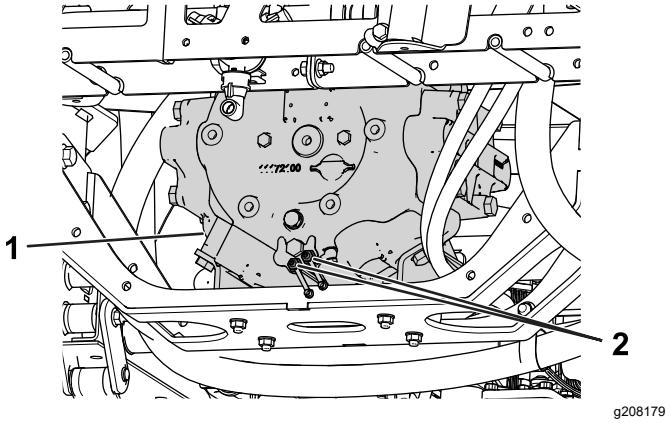

Figure 101

1. Sprayer pump
2. Grease fitting

2. Wipe the 2 remote grease fittings clean.
3. Pump grease into each remote grease fitting.
4. Wipe off the excess grease.

Greasing the Boom Hinges

Service Interval: Every 100 hours

Important: **If you wash the boom hinge with water, clear all water and debris from the hinge assembly and apply fresh grease.**

Grease Type: No. 2 lithium grease

1. Wipe the grease fittings clean so that foreign matter cannot be forced into the bearing or bushing.
2. Pump grease into the bearing or bushing at each fitting Figure 102.

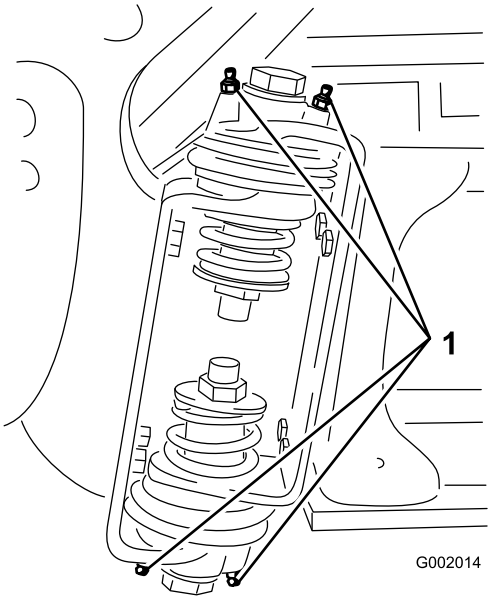

g002014

Figure 102
Right boom

1. Grease fitting

3. Wipe off excess grease.
4. Repeat this procedure for each boom pivot.

Electrical System Maintenance

Electrical System Safety

- Disconnect the battery before repairing the machine. Disconnect the negative terminal first and the positive last. Connect the positive terminal first and the negative last.
- Charge the battery in an open, well-ventilated area, away from sparks and flames. Unplug the charger before connecting or disconnecting the battery.
- Wear protective clothing and use insulated tools.

Replacing the Fuses

The sprayer system fuse block is mounted to the end of the fuse block for the vehicle. Replace an open fuse with a fuse of the same type and amperage.

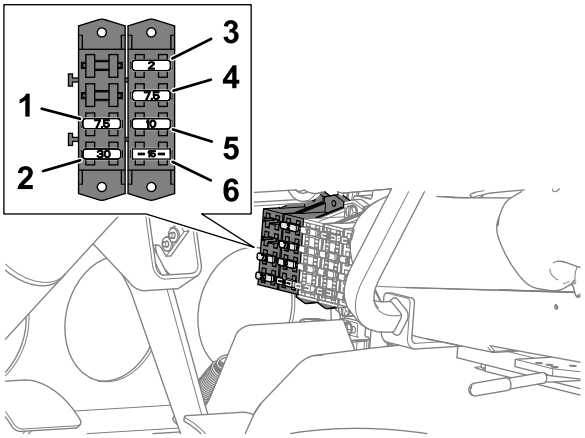

g362157

Figure 103

1.	7.5 A—TEC controller (sprayer power and rinse pump relay)	4.	7.5 A—TEC controller (output)
2.	30 A—tank rinse	5.	10 A—switched power
3.	2 A—TEC controller (logic)	6.	15 A—sprayer boom

Spray System Maintenance

Inspecting the Hoses

Service Interval: Every 200 hours

Every 400 hours/Yearly (whichever comes first)

Examine each hose in the spray system for cracks, leaks, or other damage. At the same time, inspect the connections and fittings for similar damage. Replace any hoses and fittings if they are damaged.

Changing the Suction Filter

Service Interval: Every 400 hours

Note: Determine the appropriate suction filter mesh size that you need for your job; refer to Selecting a Suction Filter (page 49).

1. Park the machine on a level surface, engage the parking brake, shut off the pump, shut off the engine, and remove the key.
2. At the top of the sprayer tank, remove the retainer that secures the hose fitting attached to the large hose from the filter housing (Figure 104).

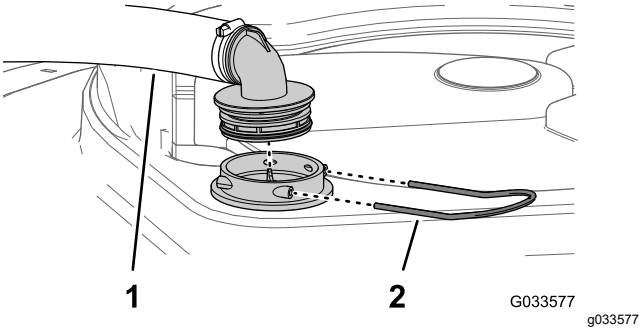

Figure 104

1. Suction hose
2. Retainer

3. Remove the hose and hose fitting from the filter housing (Figure 104).
4. Remove the old suction filter from the filter housing in the tank (Figure 105).

   Note: Discard the old filter.

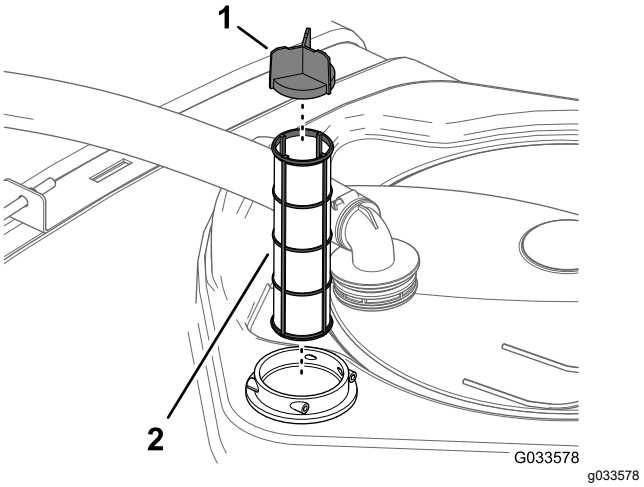

Figure 105

1. Screen vane
2. Suction filter

5. Install the new suction filter into the filter housing.

   Note: Ensure that the filter is fully seated.
6. Align the hose and hose fitting to the filter housing at the top of the tank, and secure the fitting and housing with the retainer that you removed in step 2.

Changing the Pressure Filter

Service Interval: Every 400 hours

Note: Determine the appropriate pressure filter mesh size that you need for your job; refer to Selecting a Pressure Filter (page 50).

1. Park the machine on a level surface, engage the parking brake, shut off the sprayer pump, shut off the engine, and remove the key.
2. Align a drain pan under the pressure filter (Figure 106).

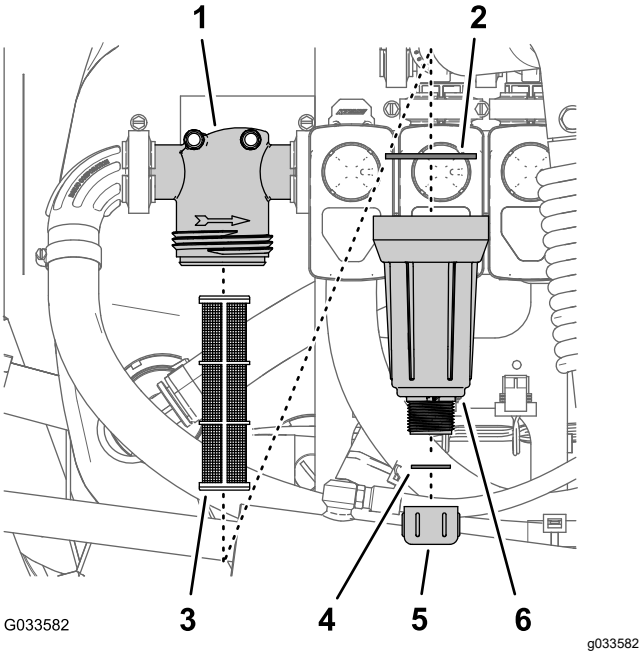

Figure 106

1. Filter head
2. Gasket (bowl)
3. Filter element
4. Gasket (drain plug)
5. Drain cap
6. Bowl

3. Rotate the drain cap counterclockwise and remove it from the bowl of the pressure filter (Figure 106).

   Note: Allow the bowl to drain completely.

4. Rotate the bowl counterclockwise and remove the filter head (Figure 106).
5. Remove the old pressure filter element (Figure 106).

   Note: Discard the old filter.

6. Check the gasket for the drain plug (located inside the bowl) and the gasket for bowl (located inside the filter head) for damage and wear (Figure 106).

   Note: Replace any damaged or worn gaskets for the plug, bowl, or both.

7. Install the new pressure filter element into the filter head (Figure 106).

   Note: Ensure that the filter element is firmly seated into the filter head.

8. Install the bowl onto the filter head, and tighten by hand (Figure 106).
9. Assemble the drain cap onto the fitting at the bottom of the bowl, and tighten the cap by hand (Figure 106).

Changing the Nozzle Filter

Note: Determine the appropriate nozzle filter mesh size that you need for your job; refer to Selecting a Nozzle-Tip Filter (Optional) (page 51).

1. Park the machine on a level surface, engage the parking brake, shut off the sprayer pump, shut off the engine, and remove the key.
2. Remove the nozzle from the spray turret (Figure 107).

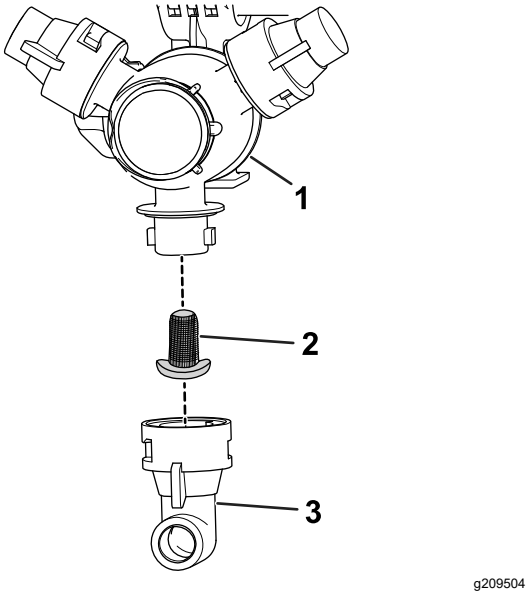

Figure 107

1. Spray turret
2. Nozzle filter
3. Nozzle

3. Remove the old nozzle filter (Figure 107).

   Note: Discard the old filter.

4. Install the new nozzle filter (Figure 107).

   Note: Ensure that the filter is fully seated.

5. Install the nozzle onto the spray turret (Figure 107).

Inspecting the Sprayer Pump

Service Interval: Every 400 hours/Yearly (whichever comes first)—Inspect the pump diaphragm and replace if necessary. (contact your authorized Toro distributor).

Every 400 hours/Yearly (whichever comes first)—Inspect the pump check valves and replace if necessary. (contact your authorized Toro distributor).

Note: The following machine components are considered parts subject to consumption through use unless found defective and are not covered by the Warranty associated with this machine.

Have an authorized Toro distributor check the following internal pump components for damage:

- Pump diaphragm
- Pump check valve assemblies

Replace any components if necessary.

Inspecting the Nylon Pivot Bushings

Service Interval: Every 400 hours/Yearly (whichever comes first)

1. Park the machine on a level surface, engage the parking brake, shut off the pump, shut off the engine, and remove the key.
2. Extend the outer-boom sections to the spray position and support the boom sections using stands or straps and lifting equipment.
3. Remove the bolt and nut that secure the pivot pin, and remove the pin (Figure 108).

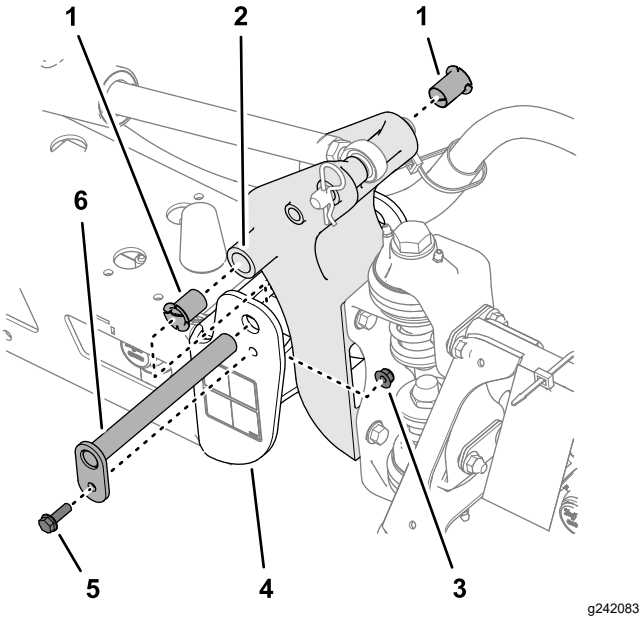

Figure 108

1. Nylon bushings
2. Pivot bracket
3. Flange locknut
4. End channel (center frame)
5. Flange bolt
6. Pivot pin

4. Remove the boom and pivot bracket assembly from the end channel of the center frame to access the nylon bushings.
5. Remove and inspect the nylon bushings from the front and back sides of the pivot bracket (Figure 108).

   Note: Replace any worn or damaged bushings.
6. Lubricate the nylon bushings with a small amount of oil and install the bushings into pivot bracket (Figure 108).
7. Align the holes in the pivot bracket with the holes in the end channel (Figure 108).
8. Install the pivot pin and secure it with the flange bolt and flange locknut removed in step 3.
9. Repeat steps 2 through 8 for the other outer-boom section.

Adjusting the Booms to Level

The following procedure can be used to adjust the actuators on the center boom to keep the left and right booms at level.

1. Extend the booms to the spray position.
2. Remove the cotter pin from the pivot pin (Figure 109).

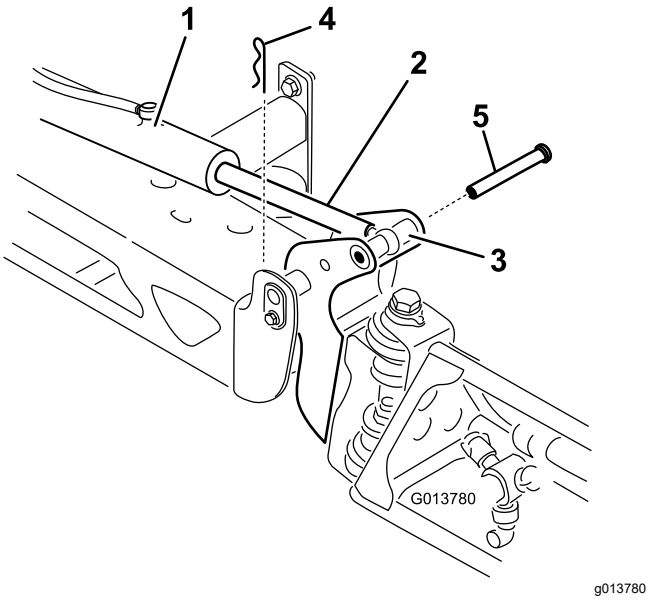

Figure 109

1. Actuator
2. Actuator rod
3. Boom-pivot pin housing
4. Cotter
5. Pin

3. Lift up on the boom and remove the pin (Figure 109), and slowly lower the boom to the ground.
4. Inspect the pin for any damage, and replace it if necessary.
5. Use a wrench on the flat sides of the actuator rod to immobilize it, then loosen the jam nut to allow the eyelet rod to be adjusted (Figure 110).

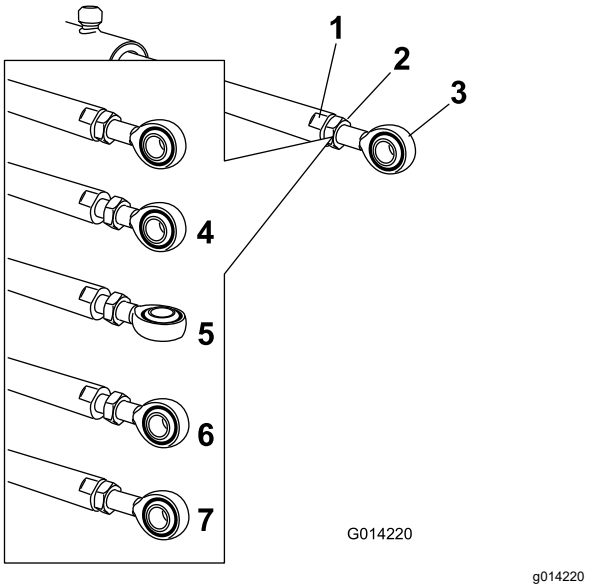

Figure 110

1. Flat on the actuator rod
2. Jam nut
3. Eyelet
4. Jam nut loosened
5. Eyelet adjusted
6. Eyelet position for assembly
7. Jam nut tightened to lock new position

6. Turn the eyelet rod in the actuator rod to shorten or lengthen the extended actuator to the desired position (Figure 110).

   Note: You must turn the eyelet rod in half or complete revolutions so that you can assemble the rod to the boom.

7. Once the desired position has been achieved, tighten the jam nut to secure the actuator and eyelet rod.
8. Raise the boom to align the pivot with the actuator rod.
9. While holding the boom, insert the pin through both boom pivot and actuator rod (Figure 109).
10. With the pin in place, release the boom and secure the pin with the cotter previously removed.
11. Repeat the procedure for each actuator rod bearing, if necessary.

Cleaning

Important: **Do not use brackish or reclaimed water to clean the machine.**

Cleaning the Flow Meter

Service Interval: Every 200 hours/Yearly (whichever comes first) (more often when using wettable powders).

1. Thoroughly rinse and drain the entire spraying system.
2. Remove the flow meter from the sprayer and flush it with clean water.
3. Remove the retainer ring on the upstream side.

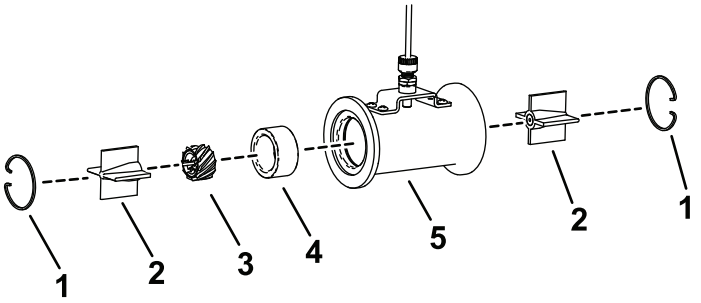

g614966

Figure 111

1. Retaining ring
2. Bearing assembly
3. Turbine
4. Collar
5. Housing

4. Clean the turbine, bearing assembly, and the collar to remove metal filings and any wettable powders.

   Important: **Add a mark onto the turbine to indicate installation direction. It is important to install it the same way it is being removed.**

5. Inspect the face of the turbine for wear. Turn the flow meter 180 degrees for installation if the face is showing signs of wear.

   Note: If both sides of the turbine show wear, replace the flow meter.

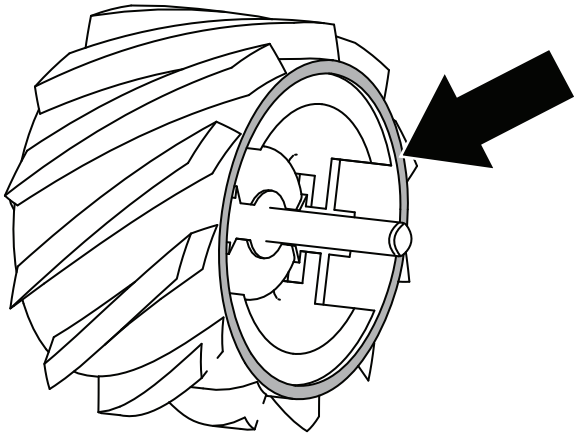

g614968

Figure 112

6. Inspect the shaft end for cupping wear.
   - A—the shaft is showing no wear; the turbine is usable.
   - B—the cupping is inside the bevel; rotate the turbine 180 degrees.
   - C—the cupping is nearly at the edge; rotate the turbine 180 degrees.
   - D—the cupping is at the edge and is flaring out; replace the flow meter.

   Note: If both shaft ends are showing wear, replace the flow meter.

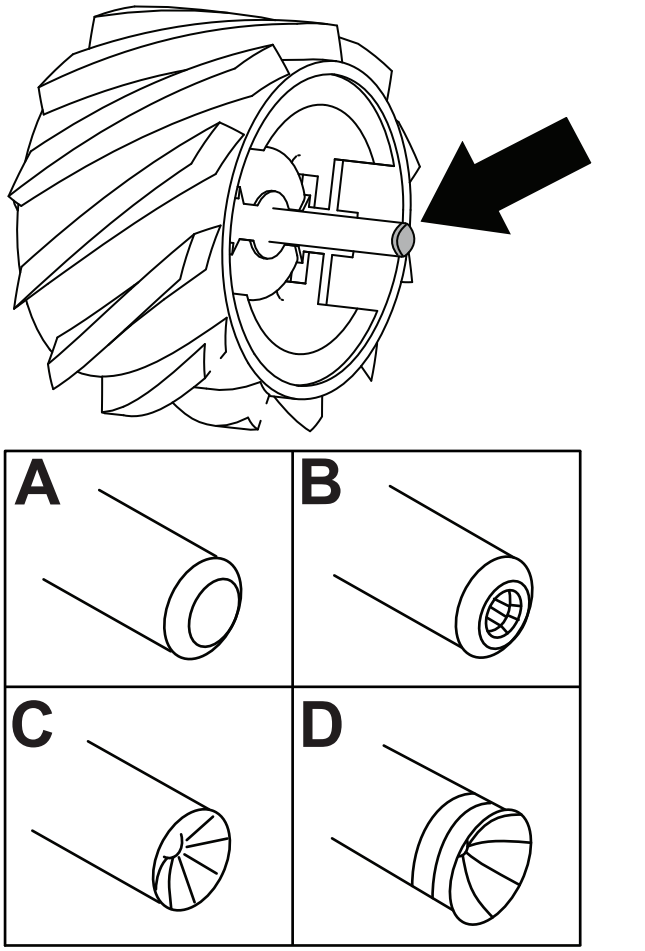

g614967

Figure 113

7. Assemble the flow meter.
8. Use a low pressure (50 kPa or 5 psi) air jet to ensure that the turbine spins freely.
9. Calibrate the flow meter; refer to your *Software Guide*.

Cleaning the Sprayer Valves

- To clean the rate control valve, refer to the following sections:
  1. Removing the Valve Actuator (page 79)
  2. Removing the Rate Control Manifold Valve (page 79)
  3. Cleaning the Manifold Valve (page 83)
  4. Assembling the Manifold Valve (page 85)
  5. Installing the Rate Control Manifold Valve (page 85)
  6. Installing the Valve Actuator (page 89)
- To clean the agitation valve; refer to the following sections:
  1. Removing the Valve Actuator (page 79)
  2. Removing the Agitation Manifold Valve (page 80)
  3. Cleaning the Manifold Valve (page 83)
  4. Assembling the Manifold Valve (page 85)
  5. Installing the Agitation Manifold Valve (page 86)
  6. Installing the Valve Actuator (page 89)
- To clean the master-boom valve, refer to the following sections:
  1. Removing the Valve Actuator (page 79)
  2. Removing the Master Boom Manifold Valve (page 81)
  3. Cleaning the Manifold Valve (page 83)
  4. Assembling the Manifold Valve (page 85)
  5. Installing the Master Boom Manifold Valve (page 87)
  6. Installing the Valve Actuator (page 89)
- To clean the 3 section valves; refer to the following sections:
  1. Removing the Valve Actuator (page 79)
  2. Removing the Section Manifold Valve (page 82)
  3. Cleaning the Manifold Valve (page 83)
  4. Assembling the Manifold Valve (page 85)
  5. Installing the Section Manifold Valve (page 88)
  6. Installing the Valve Actuator (page 89)

Removing the Valve Actuator

1. Position the sprayer on a level surface, engage the parking brake, shut off the pump, shut off the engine, and remove the key.
2. Remove the 3-pin connector of the valve actuator from the 3 socket electrical connector of the sprayer harness.
3. Remove the retainer that secures the actuator to the manifold valve for the rate control, agitation, master section, or section valve (Figure 114).

   Note: Squeeze the 2 legs of the retainer together while pushing it down.

   Note: Retain the actuator and retainer for installation in Installing the Valve Actuator (page 89).

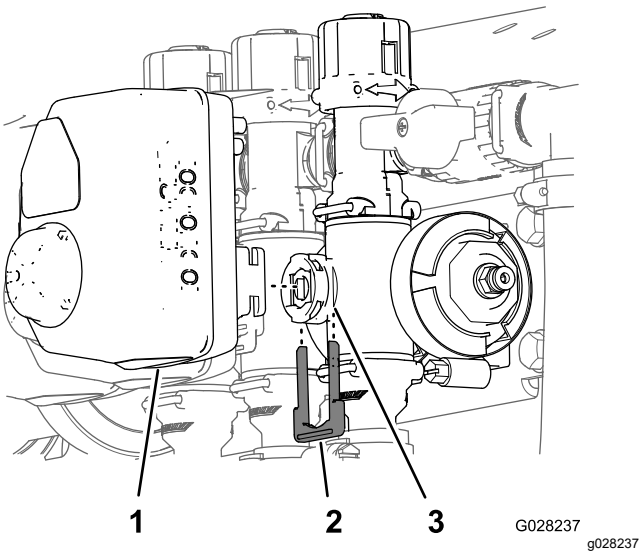

Figure 114

Section-Valve Actuator Shown (the agitation-valve actuator is similar)

1. Valve actuator (section valve shown)
2. Retainer
3. Stem port

4. Remove the actuator from the manifold valve.

Removing the Rate Control Manifold Valve

1. Remove 2 flange clamps and 2 gaskets that secure the manifold for the rate control valve (Figure 115) to the pressure filter and agitation valve.

   Note: Retain the flange clamps and gaskets for installation in Installing the Rate Control Manifold Valve (page 85).

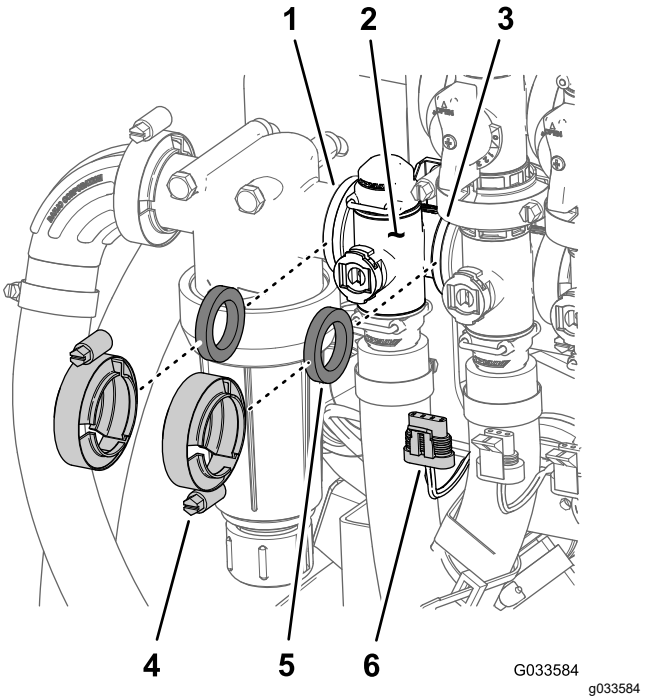

Figure 115

1. Flange (pressure filter head)
2. Manifold (rate control valve)
3. Flange (agitation valve)
4. Flange clamp
5. Gasket
6. 3-pin connector (valve actuator—rate control valve)

2. Remove the retainer that secure the outlet fitting to the manifold coupling for the rate control valve (Figure 116).

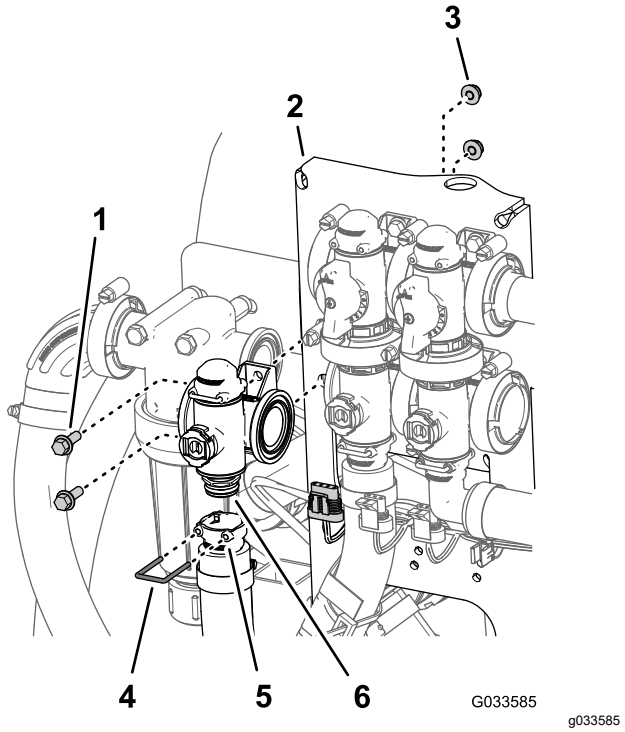

Figure 116

1. Flange-head bolt (1/4 x 3/4 inch)
2. Valve mount
3. Flange locknut (1/4 inch)
4. Retainer
5. Socket (outlet fitting)
6. Coupling (manifold—rate control valve)

3. Remove the 2 flange-head bolts (1/4 x 3/4 inch) and 2 flange locknuts (1/4 inch) that secure the rate control valve to the valve mount and remove the valve manifold from the machine (Figure 116).

   Note: If necessary, loosen the mounting hardware for the pressure filter head to ease removal of the rate control valve.

   Note: Retain the flange-head bolts, flange locknuts, and retainer for installation in Installing the Rate Control Manifold Valve (page 85).

Removing the Agitation Manifold Valve

1. Remove 3 flange clamps and 3 gaskets that secure the manifold for the agitation valve (Figure 117) to the agitation bypass valve, rate control valve, and master-boom valve.

   Note: Retain the flange clamps and gaskets for installation in Installing the Agitation Manifold Valve (page 86).

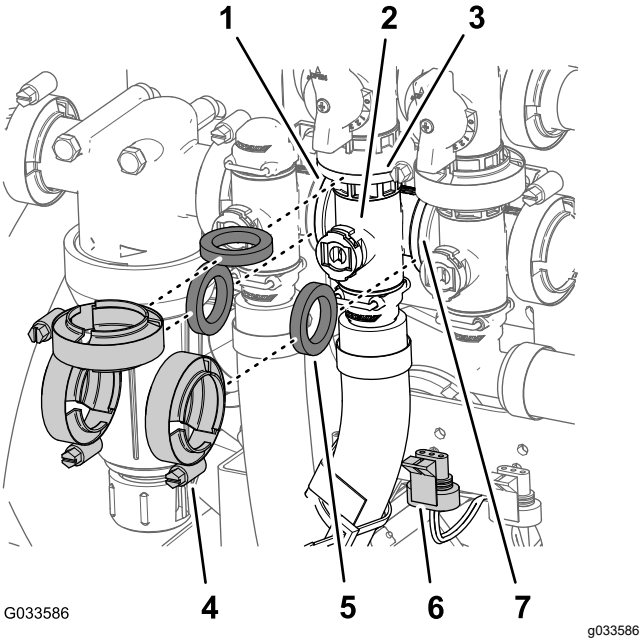

Figure 117

1. Flange (pressure filter head)
2. Manifold (agitation valve)
3. Flange (bypass valve—agitation valve)
4. Flange clamp
5. Gasket
6. 3-pin connector (valve actuator—agitation valve)
7. Flange (master-boom valve)

2. Remove the retainer that secure the quick-disconnect socket to the manifold quick-disconnect coupling for the agitation valve (Figure 118).

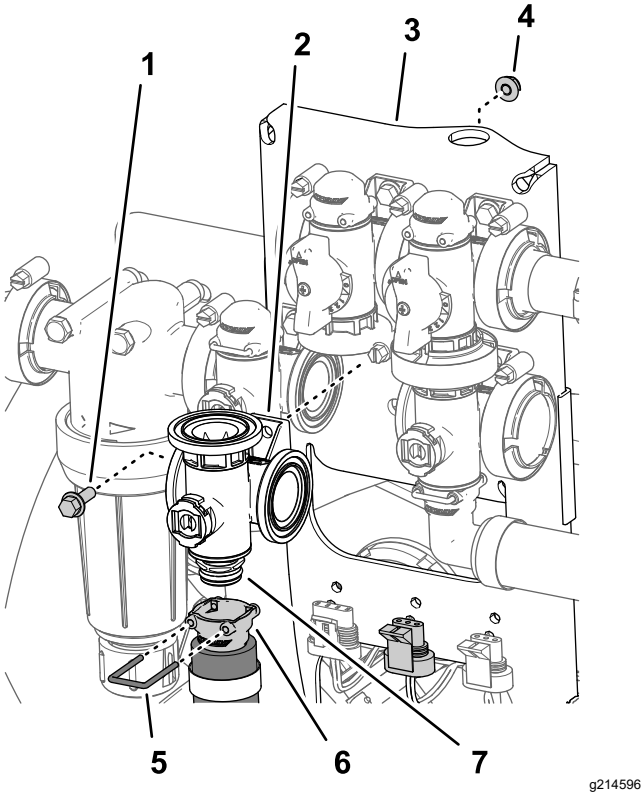

Figure 118

1. Flange-head bolt (1/4 x 3/4 inch)
2. Manifold valve (agitation valve)
3. Valve mount
4. Flange locknut (1/4 inch)
5. Retainer
6. Quick-disconnect fitting (socket)
7. Quick-disconnect fitting (coupling)

3. Remove the flange-head bolt (1/4 x 3/4 inch) and flange locknut (1/4 inch) that secure the agitation valve to the valve mount and remove the valve manifold from the machine (Figure 118).

   Note: Retain the flange head bolt, flange locknut, and retainer for installation in Installing the Agitation Manifold Valve (page 86).

Removing the Master Boom Manifold Valve

1. Remove flange clamps and gaskets that secure the manifold for the master-boom valve (Figure 119) to the master-boom bypass valve, agitation valve, and 90° flanged elbow (at the end of the hose for the flow meter).

   Note: Retain the flange clamps and gaskets for installation in Installing the Master Boom Manifold Valve (page 87).

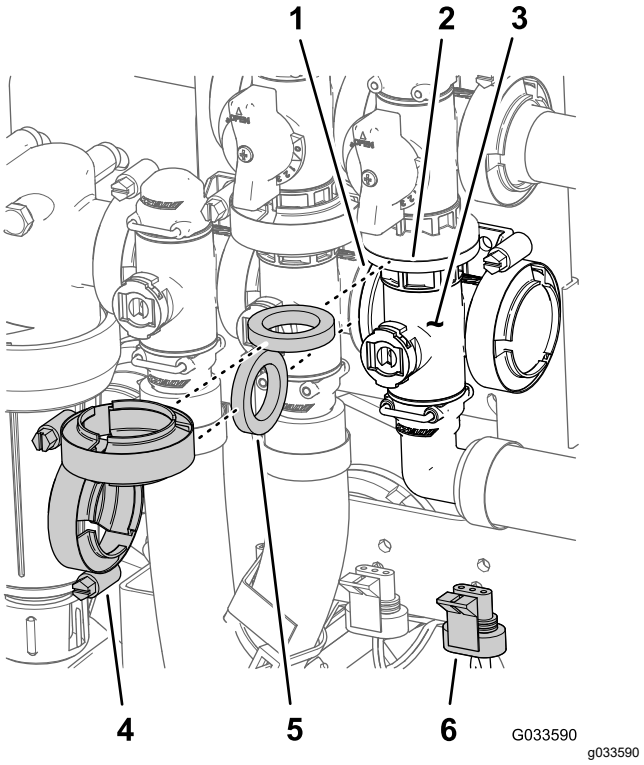

Figure 119

1. Flange (agitation-valve)
2. Flange (bypass—master-boom valve)
3. Manifold (master-boom valve)
4. Flange clamp
5. Gasket
6. 3-pin connector (valve actuator—master-boom valve)

2. Remove the retainer that secure the 90° outlet fitting to the manifold coupling for the master-boom valve (Figure 120).

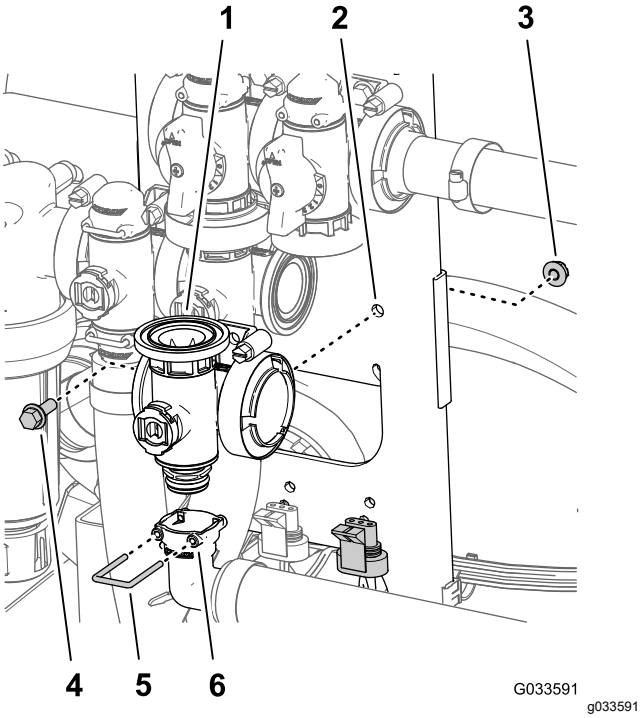

Figure 120

1. Manifold (master-boom valve)
2. Valve mount
3. Flange locknut (1/4 inch)
4. Flange-head bolt (1/4 x 3/4 inch)
5. Retainer
6. Socket (90° outlet fitting)

3. Remove the flange-head bolt (1/4 x 3/4 inch) and flange locknut (1/4 inch) that secure the master-boom valve to the valve mount and remove the valve manifold from the machine (Figure 120).

   Note: Retain the flange-head bolt, flange locknut, and retainer for installation in Installing the Master Boom Manifold Valve (page 87).

Removing the Section Manifold Valve

1. Remove clamps and gaskets that secure the manifold for the section valve (Figure 121) to the adjacent section valve (if left section valve, and the reducer coupling).

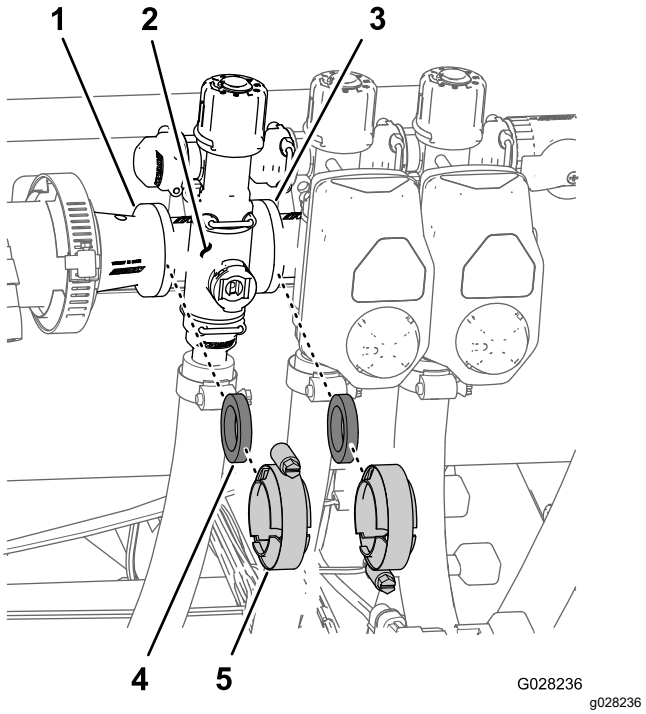

Figure 121

1. Flange (reducer coupling)
2. Manifold (section valve)
3. Flange (adjacent section valve)
4. Gasket
5. Flange clamp

2. Remove the retainers that secure the outlet fitting to the section valve manifold and the valve manifold to the bypass fitting (Figure 122).

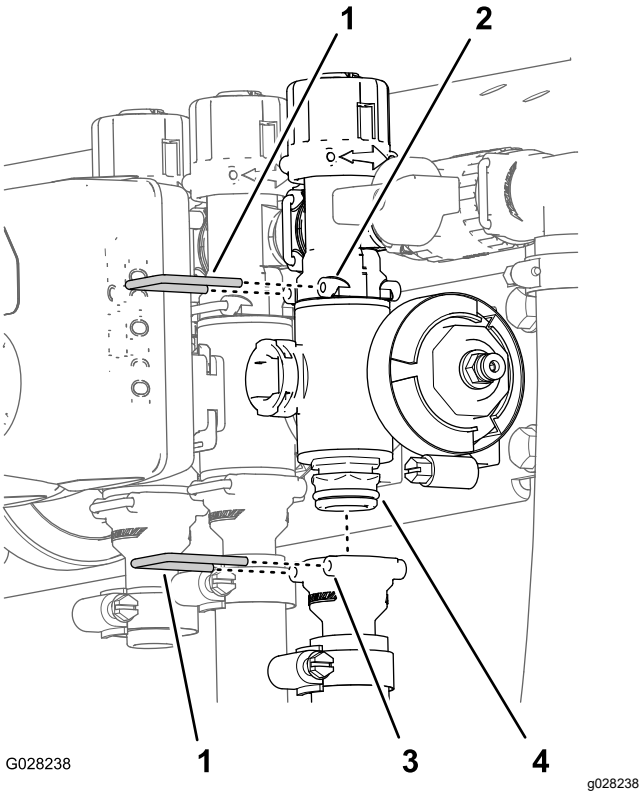

Figure 122

1. Retainer
2. Socket (bypass fitting)
3. Socket (outlet fitting)
4. Manifold valve assembly

3. For the left or right boom section valves, remove the flanged-head bolts and flanged locknuts that secure the section valve(s) to the valve mount and remove the valve manifold(s) from the machine; for the center section valve, remove the section valve manifold from the machine (Figure 123).

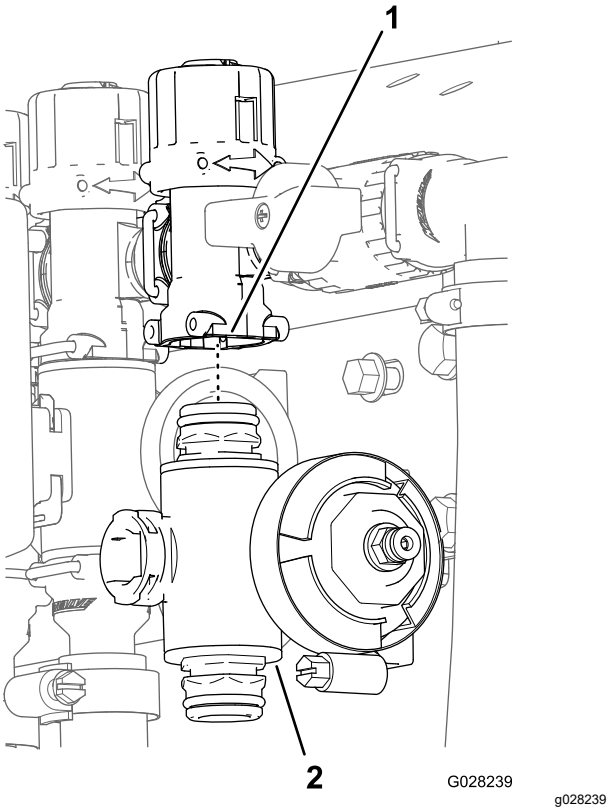

Figure 123

1. Bypass fitting
2. Section valve manifold

Cleaning the Manifold Valve

1. Position the valve stem so that it is in the closed position (Figure 124B).

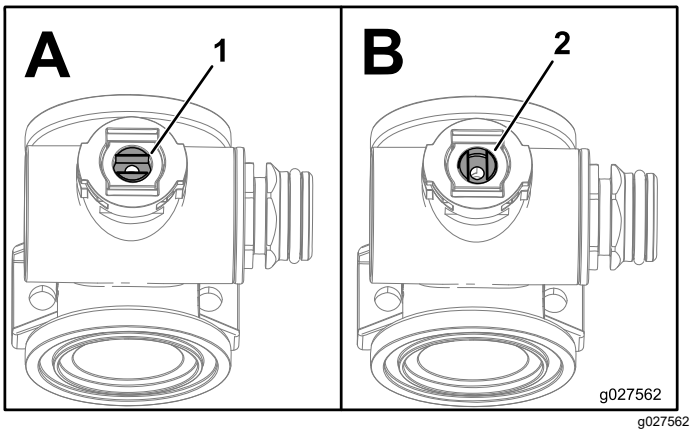

Figure 124

1. Valve open
2. Valve closed

2. Remove the 2 end-cap-fitting assemblies from each end of the manifold body (Figure 125 and Figure 126).

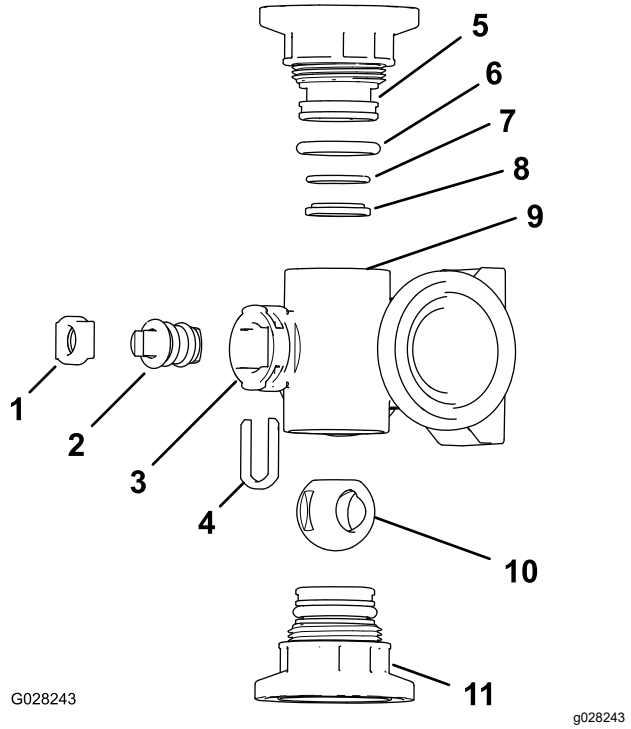

Figure 125

Agitation Valve Manifold

1. Stem retainer
2. Valve stem
3. Stem port
4. Stem-capture retainer
5. End-cap fitting
6. End-cap seal O-ring (0.796 x 0.139 inch)
7. Back seating O-ring (0.676 x 0.07 inch)
8. Valve-seat ring
9. Manifold body
10. Ball valve
11. End-cap-fitting assembly

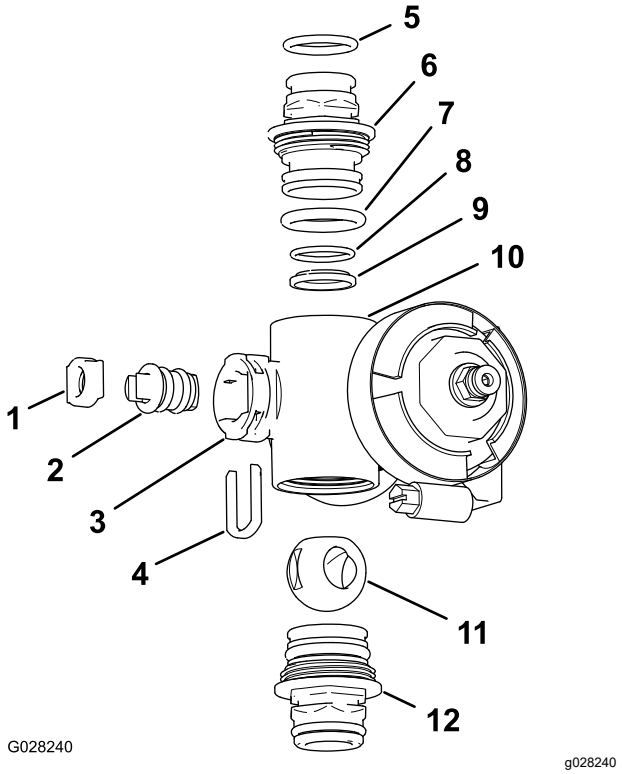

Figure 126

Section Valve Manifold

1. Valve-stem seat
2. Valve-stem assembly
3. Stem port
4. Stem retainer
5. Outlet fitting O-ring (0.737 x 0.103 inch)
6. Coupling (manifold)
7. End-cap O-ring (0.796 x 0.139 inch)
8. Back seating O-ring (0.676 x 0.07 inch)
9. Ball seat
10. Manifold body
11. Ball valve
12. Coupling assembly (manifold)

3. Turn the valve stem so that the ball is in the open position (Figure 124A).

   Note: When the valve stem is parallel with the valve flow, the ball slides out.

4. Remove the stem retainer from the slots in the stem port in the manifold (Figure 125 and Figure 126).
5. Remove the stem retainer and valve stem seat from the manifold (Figure 125 and Figure 126).
6. Reach into the manifold body and remove the valve-stem assembly (Figure 125 and Figure 126).
7. Clean the inside of the manifold and exterior of the ball valve, valve-stem assembly, stem capture, and end fittings.

Assembling the Manifold Valve

Operator supplied material: Clear silicone grease.

Important: **Use only silicone grease when assembling the valve.**

1. Check the condition of the outlet fitting O-rings (section valve manifold only), end cap O-rings, back seating O-rings, and ball seat for damage or wear (Figure 125 and Figure 126).

   Note: Replace any damaged or worn O-rings or seats.

2. Apply silicone grease to the valve stem and insert it into the valve stem seat (Figure 125 and Figure 126).
3. Install the valve stem and seat into the manifold and secure the stem and seat with the stem retainer (Figure 125 and Figure 126).
4. Ensure that the back seating O-ring and the ball seat are aligned and seated into the end-cap fitting (Figure 125 and Figure 126)
5. Install the end-cap fitting assembly onto the manifold body until the flange of the end-cap fitting touches the manifold body (Figure 125 and Figure 126), then turn the end-cap fitting an additional 1/8 to 1/4 turn.

   Note: Use caution so as not to damage the end of the fitting.

6. Insert the ball into the valve body (Figure 127).

   Note: The valve stem should fit inside the ball drive slot. If the valve stem does not fit, adjust the position of the ball (Figure 127).

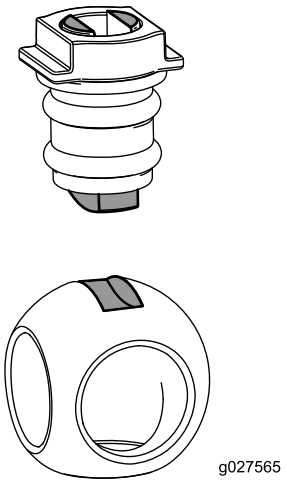

g027565

Figure 127

7. Turn the valve stem assembly so that the valve is closed (Figure 124B)
8. Repeat steps 4 and 5 for the other end-cap fitting assembly.

Installing the Rate Control Manifold Valve

1. Align a gasket between the flanges of the rate control valve manifold and the pressure filter head (Figure 128A).

   Note: If needed, loosen the mounting hardware for the pressure filter head as needed to provide clearance.

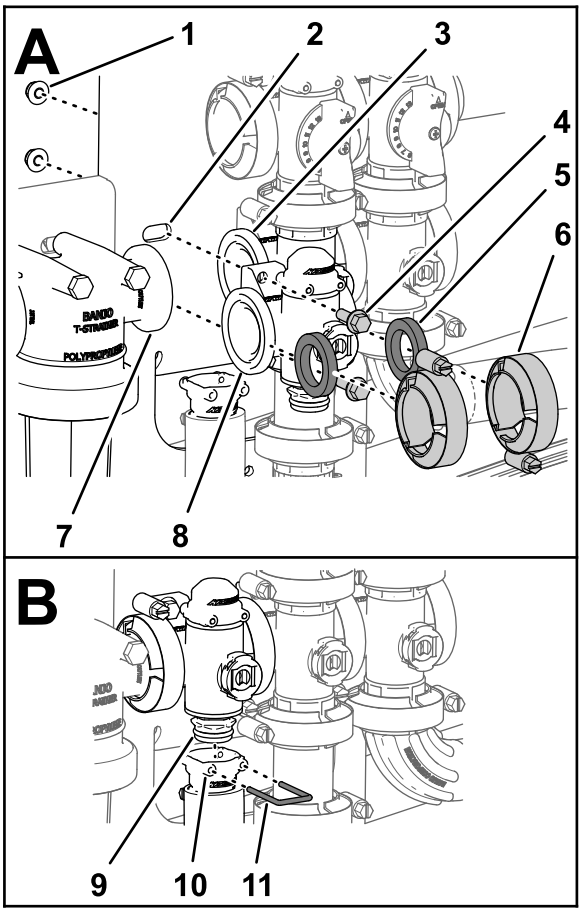

g238670

Figure 128

1. Locknut (1/4 inch)	5. Gasket	9. Coupling (manifold-valve)
2. Valve mount	6. Flange clamp	10. Socket (outlet fitting)
3. Flange (agitation-valve)	7. Flange (pressure filter head)	11. Retainer
4. Flanged-head bolt (1/4 x 3/4 inch)	8. Flange (rate control valve)	

2. Assemble the rate control valve manifold, gasket, and pressure filter head with a flange clamp and tighten by hand (Figure 128A).
3. Align a gasket between the flanges of the rate control valve and the agitation-valve manifold (Figure 128A).

4. Assemble the rate control valve manifold, gasket, and agitation-valve manifold with a flange clamp and tighten by hand (Figure 128A).
5. Assemble the rate control valve to the valve mount with the 2 flanged-head bolts and 2 flanged locknuts (Figure 128A) that you removed in step 3 of Removing the Rate Control Manifold Valve (page 79), and torque the nut and bolt to 10 to 12 N·m (90 to 110 in-lb).
6. Assemble the outlet fitting onto the coupling fitting at the bottom of the manifold for the rate control valve (Figure 128B).
7. Secure the outlet fitting coupling fitting by inserting a retainer into the socket of the outlet fitting (Figure 128B).
8. If you loosened the mounting hardware for the pressure filter head, tighten the nut and bolt to 10 to 12 N·m (90 to 110 in-lb).

Installing the Agitation Manifold Valve

1. Align the flange of the agitation-valve manifold, a gasket, and the flange of the agitation bypass valve (Figure 129).

   Note: If needed, loosen the mounting hardware for the master-boom valve as needed to provide clearance.

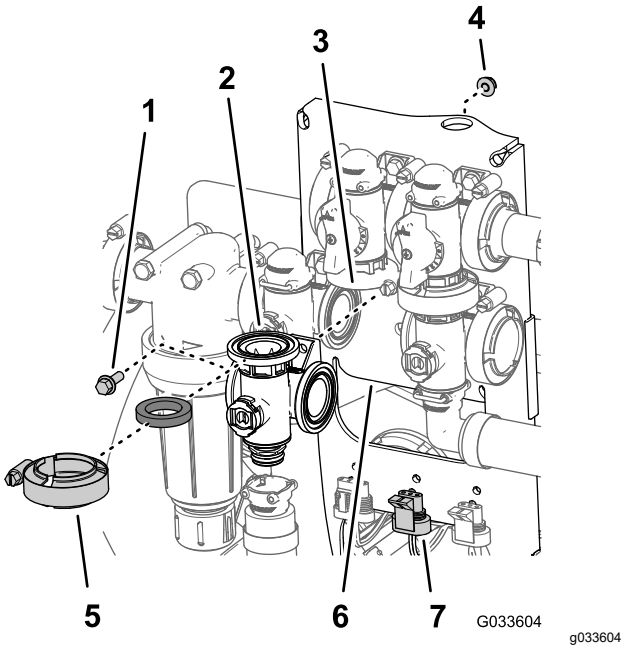

Figure 129

1. Flanged-head bolt (1/4 x 3/4 inch)
2. Gasket
3. Manifold (agitation valve)
4. Flanged locknut (1/4 inch)
5. Flange clamp
6. Valve mount
7. 3-pin connector (valve actuator—agitation valve)

2. Assemble the agitation bypass valve, gasket, and agitation-valve manifold with a flange clamp and tighten by hand (Figure 130).
3. Align a gasket between the flanges of the rate control valve and the agitation-valve manifold (Figure 130A).

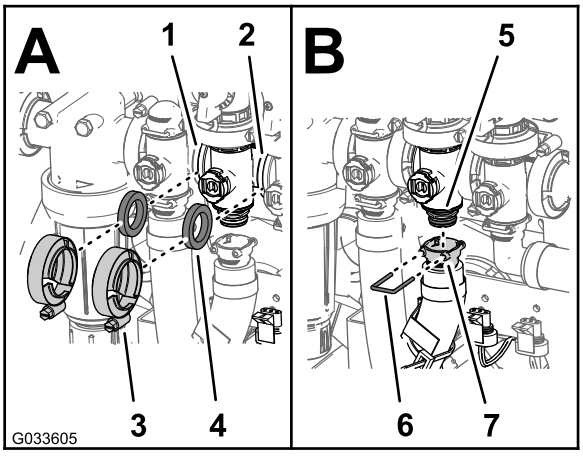

Figure 130

1. Flange (rate control valve)
2. Flange (master-boom valve)
3. Flange clamp
4. Gasket
5. Coupling (manifold-valve)
6. Socket (outlet fitting)
7. Retainer

4. Assemble the rate control valve, gasket, and agitation-valve manifold with a flange clamp and tighten by hand (Figure 130A)
5. Align a gasket between the flanges of the agitation-valve manifold and the master-boom valve (Figure 130A)
6. Assemble the agitation-valve manifold, gasket, and master-boom valve with a flange clamp and tighten by hand (Figure 130A)
7. Assemble the outlet fitting onto the coupling fitting at the at the bottom of the manifold for the agitation valve (Figure 130B)
8. Secure the outlet fitting to the coupling fitting by inserting a retainer into the socket of the outlet fitting (Figure 130B)
9. Assemble the agitation valve to the valve mount with the flanged-head bolt and flanged locknut (Figure 129) that you removed in step 3 of Removing the Agitation Manifold Valve (page 80), and torque the nut and bolt to 10 to 12 N·m (90 to 110 in-lb).
10. If you loosened the mounting hardware for the master-boom valve, tighten the nut and bolt to 10 to 12 N·m (90 to 110 in-lb).

Installing the Master Boom Manifold Valve

1. Align the flange of the master-boom-valve manifold, a gasket, and the flange of the master-boom bypass valve (Figure 131).

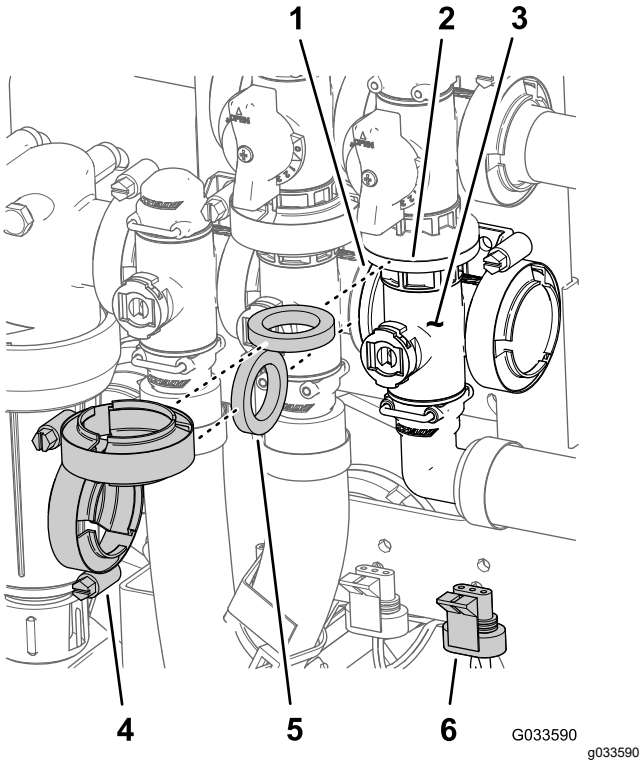

Figure 131

1. Flange (agitation valve)
2. Flange (bypass—master-boom valve)
3. Manifold (master-boom valve)
4. Flange clamp
5. Gasket
6. 3-pin connector (valve actuator—master-boom valve)

2. Assemble the master-boom valve manifold, gasket, and master-boom bypass valve with a flange clamp tightened hand tight (Figure 131).
3. Align the flange of the master-boom-valve manifold, a gasket, and the agitation-valve manifold (Figure 131).
4. Assemble the master-boom-valve manifold, gasket, and agitation-valve manifold with a flange clamp and tighten by hand (Figure 131)
5. Align the socket of the 90° outlet fitting onto the coupling fitting at the at the bottom of the manifold for the master-boom valve (Figure 132).

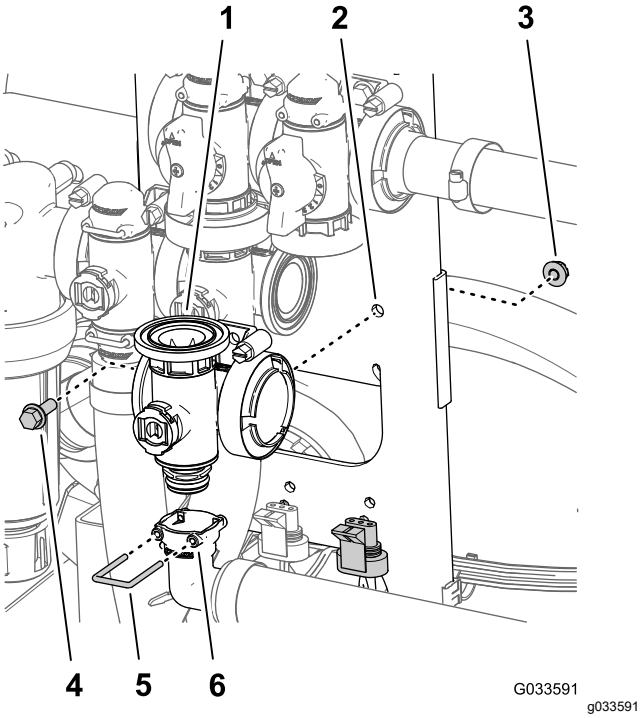

Figure 132

1. Manifold (master-boom valve)
2. Valve mount
3. Flanged locknut (1/4 inch)
4. Flanged-head bolt (1/4 x 3/4 inch)
5. Retainer
6. Socket (90° outlet fitting)

6. Secure the outlet fitting coupling fitting by inserting a retainer into the socket of the outlet fitting (Figure 132).
7. Assemble the agitation valve to the valve mount with the flanged-head bolt and flanged locknut (Figure 131) that you removed in step 3 of Removing the Master Boom Manifold Valve (page 81), and torque the nut and bolt to 10 to 12 N·m (90 to 110 in-lb).

Installing the Section Manifold Valve

1. Insert the upper end-cap fitting of the manifold valve into the bypass fitting (Figure 133A).

   Note: If needed, loosen the mounting hardware for the bypass fitting to provide clearance.

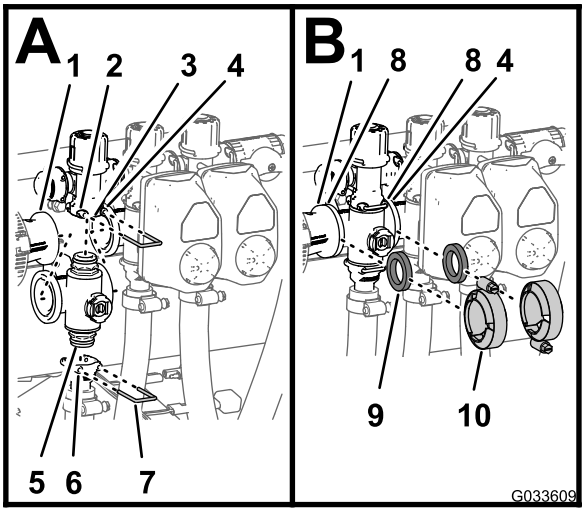

Figure 133

1. Flange (reducer coupling)
2. Socket (bypass fitting)
3. Bypass fitting
4. Flange (adjacent manifold—agitation valve)
5. End-cap fitting (manifold valve assembly)
6. Socket (outlet fitting)
7. Retainer
8. Flange (manifold—section valve)
9. Gasket
10. Flange clamp

2. Secure the end-cap fitting to the bypass fitting by inserting a retainer into the socket of the bypass fitting (Figure 133A).
3. Assemble the outlet fitting onto the lower end-cap fitting of the manifold valve (Figure 133A).
4. Secure the end-cap fitting to the outlet fitting by inserting a retainer into the socket of the outlet fitting (Figure 133A).
5. Align a gasket between the flanges of the reducer coupling and the section valve manifold (Figure 133B).
6. Assemble the reducer coupling, gasket, and section valve manifold with a clamp and tighten by hand (Figure 133B).
7. If installing the 2 left most section valves, align a gasket between the flanges of the 2 adjacent section valve manifolds (Figure 133B).
8. Assemble the 2 adjacent section valve manifolds and gasket with a clamp and tighten by hand (Figure 133B).

9. For the left or right boom section valves, assemble the valves to the valve mount with the flanged-head bolt and flanged locknut that you removed in step 3 of Removing the Section Manifold Valve (page 82) and torque the nuts and bolts to 10 to 12 N·m (90 to 110 in-lb).
10. If you loosened the mounting hardware for the bypass fitting, tighten the nut and bolt to 10 to 12 N·m (90 to 110 in-lb).

Installing the Valve Actuator

1. Align the actuator to the manifold valve and (Figure 114).
2. Secure the actuator and valve with the retainer that you removed in step 3 of Removing the Valve Actuator (page 79).
3. Connect the 3-pin connector of the valve-actuator harness to the 3-socket connector of the wire harness of the sprayer.

Storage

Storage Safety

- Before you leave the operator's position, do the following:
  - Park the machine on a level surface.
  - Shut off the spray pump.
  - Engage the parking brake.
  - Shut off the engine and remove the key (if equipped).
  - Wait for all movement to stop.
  - Allow the machine to cool before adjusting, servicing, cleaning, or storing it.
- Do not store the machine or fuel container where there is an open flame, spark, or pilot light, such as on a water heater or other appliance.

Preparing the Machine for Storage

Short-Term Storage

(Less than 30 days)

Perform the procedures that follow:

1. Cleaning the Sprayer System (page 62)
2. Preparing to Condition the Sprayer (page 90)
3. Conditioning the Sprayer (page 90)

Cleaning the Exterior of the Machine

Important: **Do not use brackish or reclaimed water to clean the machine.**

1. Park the machine on a level surface; engage the parking brake; shut off the spray pump and the engine; remove the key; and wait for all movement to stop before leaving the machine.

   Note: For HD- and HDX-Series Workman models with a manual transmission, disengage the PTO.
2. Clean dirt and grime from the entire machine, including the outside of the cylinder-head fins of the engine and blower housing.

   Important: **You can wash the machine with mild detergent and water. Do not use high-pressure water to wash the machine. Pressure washing may damage the electrical system or wash away necessary grease at friction points. Avoid excessive use of water, especially near the control panel, lights, engine, and the battery.**

Preparing to Condition the Sprayer

1. Move the machine to the drain pad area, engage the parking brake, shut off the spray pump, shut off the engine, remove the key, and wait for all movement to stop before leaving the operator's position.
2. Drain the fresh-water tank and leave the tank spigot open.
3. Drain the sprayer tank as completely as possible.
4. Prepare rust inhibiting, non-alcohol based, RV antifreeze solution; refer to Preparing the Conditioner (page 65).
5. Remove 1 of the pressure-sense tubes from the push-to-connect fitting as shown in Figure 134.

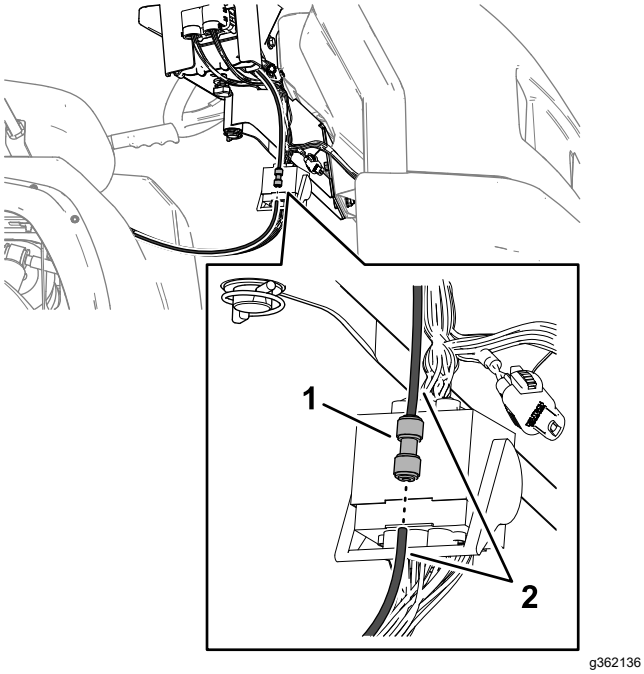

Figure 134

1. Push-to-connect fitting
2. Pressure-gauge tube

6. Start the engine and lower the outer booms sections.

Conditioning the Sprayer

1. Run the spray pump for a few minutes to circulate the RV antifreeze throughout the spray system and any installed spray accessories.
2. Turn the left, center, and right section switches to the ON position.
3. Turn the master section switch to the ON position and look for the following:
   - Ensure that RV anti-freeze flows from the disconnected end of the pressure-gauge tube.
   - Spray out the nozzle until the RV anti-freeze is visible.
4. Turn the master section switch to the OFF position.
5. Turn the pump switch to the OFF position.
6. Use the boom-section lift switches to raise the outer boom sections.

   Raise the boom sections until they have moved completely into boom-transport cradle forming the "X" transport position and the lift cylinders are fully retracted.

   Note: Make sure that the lift cylinders are fully retracted to prevent actuator rod damage.
7. Shut off the engine.
8. Drain the sprayer tank as completely as possible.

Long-Term Storage

(Longer than 30 days)

1. Clean the sprayer valves; refer to Cleaning the Sprayer Valves (page 78).
2. Grease the sprayer; refer to Lubrication (page 71).
3. Check and tighten all bolts, nuts, and screws.

   Note: Repair or replace any parts that are worn or damaged.
4. Check the condition of all spray hoses.

   Note: Replace any hoses that are worn or damaged.
5. Tighten all hose fittings.
6. Paint all scratched or bare metal surfaces with paint is available from your authorized Toro distributor.
7. If needed, prepare the vehicle for long-term storage; refer to the *Operator's Manual* for your vehicle.
8. Store the machine in a clean, dry garage or storage area.
9. Cover the machine to protect it and keep it clean.

Preparing the Machine for Service

1. Insert the pressure-sense tube into the push-to-connect fitting until it is fully seated (Figure 135).

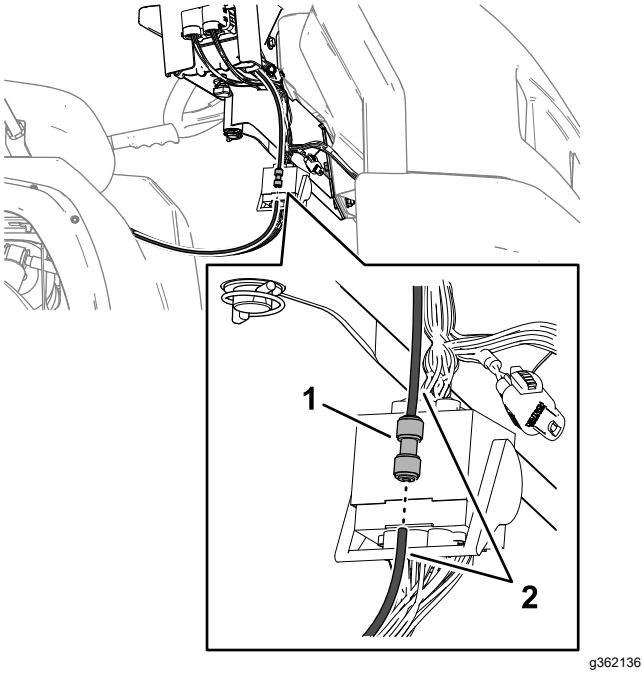

Figure 135

1. Push-to-connect fitting
2. Pressure-gauge tube

2. Close the spigot of the fresh-water tank.
3. Add fuel to the fuel tank.
4. Service the vehicle; refer to the *Operator's Manual* for your vehicle.

Removing the Sprayer and Tank Skid

Lifting equipment capacity: 408 kg (900 lb)

⚠ DANGER

The sprayer tank assembly presents a stored energy hazard. If not properly retained when installing or removing the assembly, it can move or fall and injure you or bystanders.

Use straps and an overhead lift to support the sprayer tank assembly during installation, removal, or any maintenance whenever you remove the retaining fasteners.

Preparing the Center Console

1. Disconnect the battery cables from the battery; refer to 6 Disconnecting the Battery (page 16).
2. Separate the fuse block of the sprayer from the fuse block of the machine and disconnect the wiring between the 2 fuse blocks; refer to 11 Installing the Sprayer Fuse Block (page 20).
3. Remove the wire harness from J-clips; refer to Routing the Rear Electrical Harness for the Sprayer to the Control Console (page 19).
4. Loosen the hand knob that is located below the console and remove the hairpin; refer to Installing the Control Console to the Machine (page 19).
5. Disconnect the terminals of the wires that connect the fuse block for the sprayer with the fuse block of the machine; refer to 11 Installing the Sprayer Fuse Block (page 20).
6. Separate the fuse block for the sprayer from the fuse block for the machine; refer to 11 Installing the Sprayer Fuse Block (page 20).
7. Remove the console from the console-mounting bracket at the dash of the machine and align the pivot pin on the control console with the storage bracket at the front tank strap (Figure 136); refer to Installing the Control Console to the Machine (page 19).

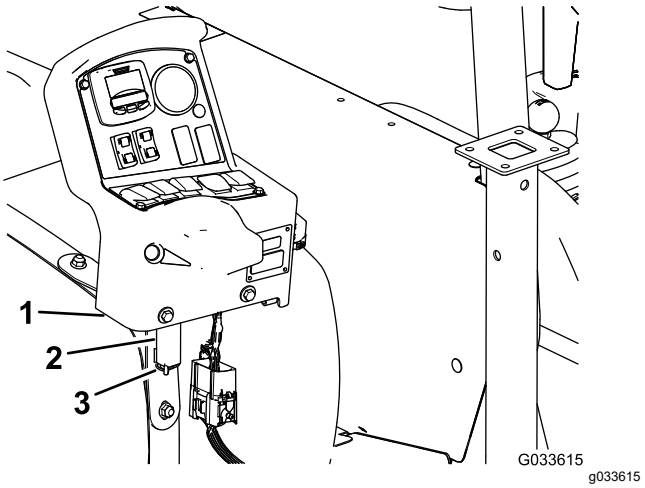

Figure 136

1. Control console
2. Storage bracket (front sprayer-tank strap)
3. Hairpin

8. Assemble the console to the bracket and secure the pivot pin to the bracket with the hairpin (Figure 136).

Installing the Jack Stands

Lifting equipment capacity: 408 kg (900 lb)

1. Align the front jack stand with the jack stand receiver at the front of the tank (Figure 137).

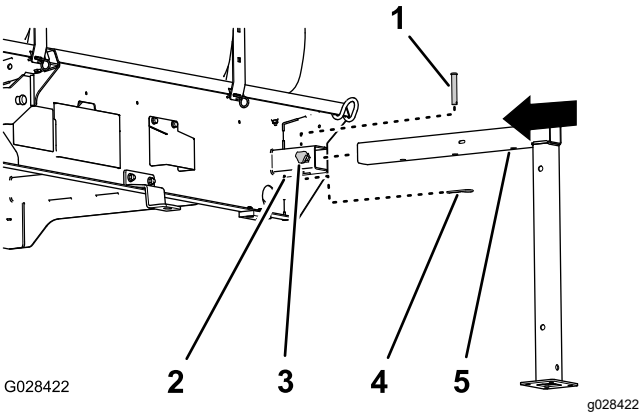

Figure 137

1. Clevis pin (1/2 x 3 inches)
2. Jack-stand receiver
3. Lock knob
4. Hairpin (5/32 x 2-5/8 inches)
5. Front jack stand

2. Insert the jack stand into the receiver until the middle hole in the horizontal jack stand tube is aligned with the hole in the top of the receiver (Figure 137).
3. Insert the clevis pin (1/2 x 3 inches) into the holes in the jack stand and receiver and secure the clevis pin with a hairpin (5/32 x 2-5/8 inches).
4. Thread a lock knob into the receiver and tighten the knob by hand (Figure 137).
5. Align the rear jack stand with the rear jack-stand receiver (Figure 138).

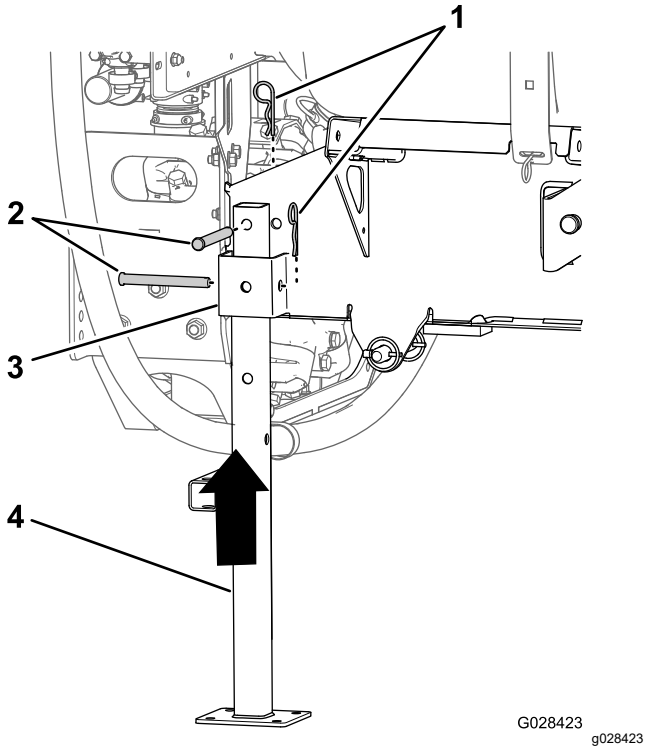

Figure 138

1. Hairpin (5/32 x 2-5/8 inches)
2. Clevis pin (1/2 x 4-1/2 inches)
3. Jack-stand receiver
4. Rear jack stand

6. Align the hole in the top of the jack stand with the hole in the frame of the tank skid (Figure 138)
7. Secure the jack stand to the receiver and the frame with 2 clevis pins (1/2 x 4-1/2 inches) and 2 hairpins (5/32 x 2-5/8 inches) as shown in Figure 138.
8. Repeat steps 1 through 7 for the front and rear jack stands at the other side of the tank skid.

Extending the Jack Stands

Use the jack and front jack stand extension to extend the jack stands.

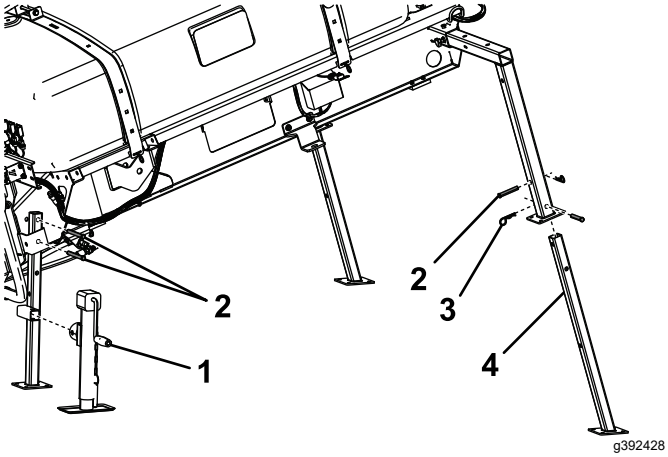

Figure 139

1. Jack
2. Clevis pin
3. Cotter pin
4. Front jack stand extension

Removing the Sprayer Skid

1. Lower the booms to approximately 45° and then pivot them forward (Figure 140).

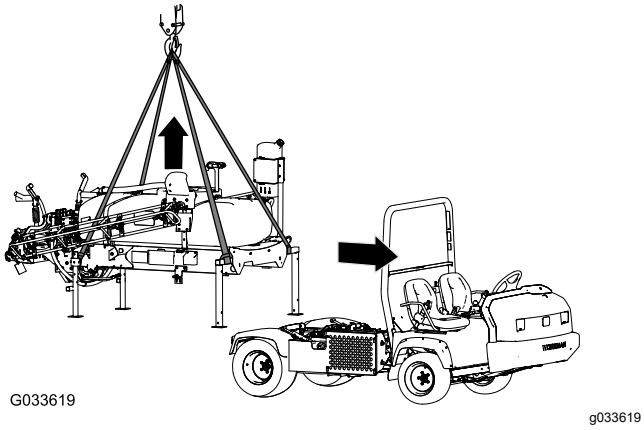

Figure 140

2. Remove the 2 bolts (1/2 x 1-1/2 inches) and 2 locknuts (1/2 inch) that secure the hold down bracket of the tank skid assembly to the bed bracket on the frame at each side of the machine; refer to 13 Lowering the Tank Skid (page 25).
3. Raise the tank skid with the lift cylinders, install the cylinder lock, and perform the following:

   Note: Refer to Raising the Tank Assembly (page 70).

   - For HD- and HDX-Series Workman models with a manual transmission, disconnect the PTO shaft from the transaxle PTO; refer to the installation instructions for the Multi Pro WM Turf Sprayer Finishing Kit, Manual Workman Utility Vehicle.
   - For HDX Workman with an automatic transmission, disconnect the hoses at the high-flow hydraulic panel and cap the fittings; refer to the installation instructions for the Multi Pro WM Turf Sprayer Finishing Kit, Automatic Workman Utility Vehicle.
   - Disconnect the speed sensor wiring; refer to Connecting the Speed Sensor Harness (HD-Series Models with a Manual Transmission) (page 17) and Connecting the Speed Sensor Harness (HDX-Auto Model) (page 17).
4. Remove the cylinder lock and lower the tank skid with the lift cylinders; refer to Lowering the Tank Assembly (page 71).
5. Attach the lifting equipment to the horizontal tubes of the forward jack stands and the vertical post of the rear jack stands (Figure 140).
6. Lift the tank assembly 7.5 to 10 cm (3 to 4 inches), and remove the lynch pins and clevis pins securing the lift cylinders to the tank assembly.
7. Lift the tank skid from the machine high enough to clear the skid from the machine (Figure 140).
8. Carefully move the vehicle forward and away from the tank skid.
9. Slowly lower the skid tank to the ground.

Troubleshooting

Problem	Possible Cause	Corrective Action
A section does not spray.	1. The electrical connection on the section valve is dirty or disconnected. 2. There is a blown fuse. 3. There is a pinched hose. 4. A section bypass is improperly adjusted. 5. There is a damaged section valve. 6. The electrical system is damaged.	1. Turn the valve off manually. Disconnect the electrical connector on the valve and clean all leads, then connect it. 2. Check the fuses and replace them as necessary. 3. Repair or replace the hose. 4. Adjust the section bypass. 5. Contact your authorized Toro distributor. 6. Contact your authorized Toro distributor.
A section does not turn off.	1. The section valve is damaged.	1. Disassemble the section valve; refer to the section Cleaning the Sprayer Valves. Inspect all the parts and replace any that are damaged.
A section valve is leaking.	1. A seal or valve seat is worn or damaged.	1. Disassemble the valve and replace the seals using the Valve Repair Kit; contact your authorized Toro distributor.
The spray nozzle(s) drip when the section switch(es) is shut off	1. Debris has accumulated between the nozzle body and the check-valve diaphragm.	1. Clean the nozzle body and diaphragm; refer to Cleaning the Nozzle Body and Check-Valve Diaphragm.
A pressure drop occurs when you turn on a boom.	1. The boom bypass valve is improperly adjusted. 2. There is an obstruction in the boom valve body. 3. A nozzle filter is damaged or clogged.	1. Adjust the boom bypass valve. 2. Remove the inlet and outlet connections to the boom valve and remove any obstructions. 3. Remove and inspect all nozzles.

Schematics

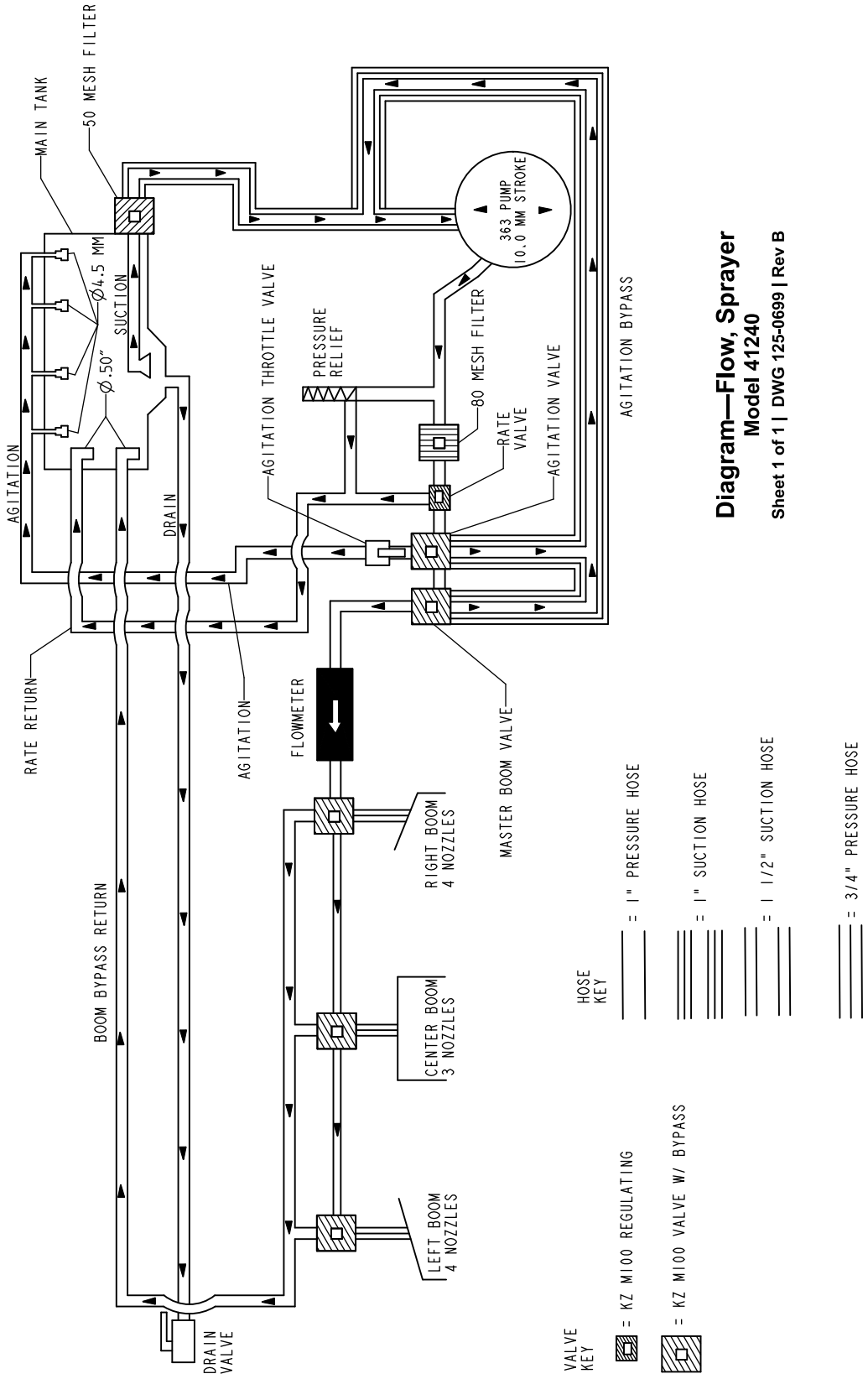

Flow Diagram, Sprayer System (Rev. B)

The Toro Warranty

Two-Year or 1,500 Hours Limited Warranty

Conditions and Products Covered

The Toro Company warrants your Toro Commercial product ("Product") to be free from defects in materials or workmanship for 2 years or 1,500 operational hours*, whichever occurs first. This warranty is applicable to all products with the exception of Aerators (refer to separate warranty statements for these products). Where a warrantable condition exists, we will repair the Product at no cost to you including diagnostics, labor, parts, and transportation. This warranty begins on the date the Product is delivered to the original retail purchaser.
* Product equipped with an hour meter.

Instructions for Obtaining Warranty Service

You are responsible for notifying the Commercial Products Distributor or Authorized Commercial Products Dealer from whom you purchased the Product as soon as you believe a warrantable condition exists. If you need help locating a Commercial Products Distributor or Authorized Dealer, or if you have questions regarding your warranty rights or responsibilities, you may contact us at:

Toro Commercial Products Service Department
8111 Lyndale Avenue South
Bloomington, MN 55420-1196

952–888–8801 or 800–952–2740
E-mail: commercial.warranty@toro.com

Owner Responsibilities

As the product owner, you are responsible for required maintenance and adjustments stated in your *Operator's Manual*. Repairs for product issues caused by failure to perform required maintenance and adjustments are not covered under this warranty.

Items and Conditions Not Covered

Not all product failures or malfunctions that occur during the warranty period are defects in materials or workmanship. This warranty does not cover the following:

- Product failures which result from the use of non-Toro replacement parts, or from installation and use of add-on, or modified non-Toro branded accessories and products.
- Product failures which result from failure to perform recommended maintenance and/or adjustments.
- Product failures which result from operating the Product in an abusive, negligent, or reckless manner.
- Parts consumed through use that are not defective. Examples of parts which are consumed, or used up, during normal Product operation include, but are not limited to, brake pads and linings, clutch linings, blades, reels, rollers and bearings (sealed or greasable), bed knives, spark plugs, castor wheels and bearings, tires, filters, belts, and certain sprayer components such as diaphragms, nozzles, flow meters, and check valves.
- Failures caused by outside influence, including, but not limited to, weather, storage practices, contamination, use of unapproved fuels, coolants, lubricants, additives, fertilizers, water, or chemicals.
- Failure or performance issues due to the use of fuels (e.g. gasoline, diesel, or biodiesel) that do not conform to their respective industry standards.
- Normal noise, vibration, wear and tear, and deterioration. Normal "wear and tear" includes, but is not limited to, damage to seats due to wear or abrasion, worn painted surfaces, scratched decals or windows.

Parts

Parts scheduled for replacement as required maintenance are warranted for the period of time up to the scheduled replacement time for that part. Parts replaced under this warranty are covered for the duration of the original product warranty and become the property of Toro. Toro will make the final decision whether to repair any existing part or assembly or replace it. Toro may use remanufactured parts for warranty repairs.

Deep Cycle and Lithium-Ion Battery Warranty

Deep cycle and Lithium-Ion batteries have a specified total number of kilowatt-hours they can deliver during their lifetime. Operating, recharging, and maintenance techniques can extend or reduce total battery life. As the batteries in this product are consumed, the amount of useful work between charging intervals will slowly decrease until the battery is completely worn out. Replacement of worn out batteries, due to normal consumption, is the responsibility of the product owner. Note: (Lithium-Ion battery only): Refer to the battery warranty for additional information.

Lifetime Crankshaft Warranty (ProStripe 02657 Model Only)

The Prostripe which is fitted with a genuine Toro Friction Disc and Crank-Safe Blade Brake Clutch (integrated Blade Brake Clutch (BBC) + Friction Disc assembly) as original equipment and used by the original purchaser in accordance with recommended operating and maintenance procedures, are covered by a Lifetime Warranty against engine crankshaft bending. Machines fitted with friction washers, Blade Brake Clutch (BBC) units and other such devices are not covered by the Lifetime Crankshaft Warranty.

Maintenance is at Owner's Expense

Engine tune-up, lubrication, cleaning and polishing, replacement of filters, coolant, and completing recommended maintenance are some of the normal services Toro products require that are at the owner's expense.

General Conditions

Repair by an Authorized Toro Distributor or Dealer is your sole remedy under this warranty.

The Toro Company is not liable for indirect, incidental or consequential damages in connection with the use of the Toro Products covered by this warranty, including any cost or expense of providing substitute equipment or service during reasonable periods of malfunction or non-use pending completion of repairs under this warranty. Except for the Emissions warranty referenced below, if applicable, there is no other express warranty. All implied warranties of merchantability and fitness for use are limited to the duration of this express warranty.

Some states do not allow exclusions of incidental or consequential damages, or limitations on how long an implied warranty lasts, so the above exclusions and limitations may not apply to you. This warranty gives you specific legal rights, and you may also have other rights which vary from state to state.

Note Regarding Emissions Warranty

The Emissions Control System on your Product may be covered by a separate warranty meeting requirements established by the U.S. Environmental Protection Agency (EPA) and/or the California Air Resources Board (CARB). The hour limitations set forth above do not apply to the Emissions Control System Warranty. Refer to the Engine Emission Control Warranty Statement supplied with your product or contained in the engine manufacturer's documentation.

Countries Other than the United States or Canada

Customers who have purchased Toro products exported from the United States or Canada should contact their Toro Distributor (Dealer) to obtain guarantee policies for your country, province, or state. If for any reason you are dissatisfied with your Distributor's service or have difficulty obtaining guarantee information, contact your Authorized Toro Service Center.