Form No. 3477-615 Rev C

TORO®

Count on it.

Operator's Manual

Multi Pro® WM Turf Sprayer

Model No. 41240—Serial No. 416500000 and Up

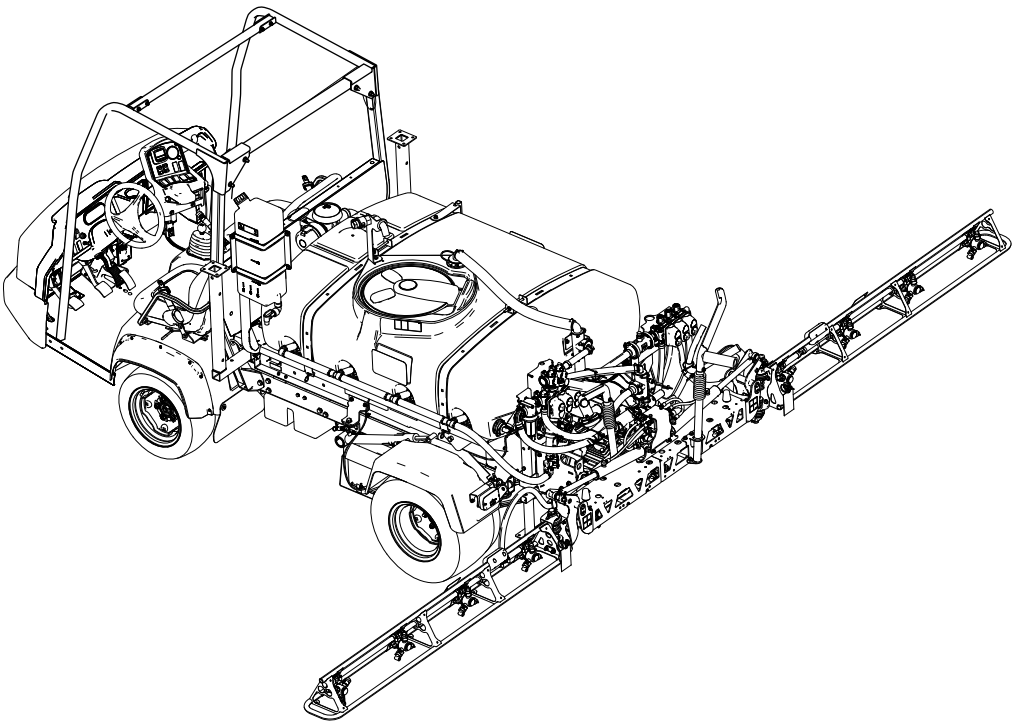

Note: The installation of the Multi Pro WM requires the installation of 1 or more interdependent kits. Contact your authorized Toro distributor for more information.

Register at www.Toro.com.
Original Instructions (EN)

CE UK CA

3477-615

This product complies with all relevant European directives; for details, please see the separate product specific Declaration of Conformity (DOC) sheet.

It is a violation of California Public Resource Code Section 4442 or 4443 to use or operate the engine on any forest-covered, brush-covered, or grass-covered land unless the engine is equipped with a spark arrester, as defined in Section 4442, maintained in effective working order or the engine is constructed, equipped, and maintained for the prevention of fire.

⚠ WARNING

CALIFORNIA
Proposition 65 Warning

Use of this product may cause exposure to chemicals known to the State of California to cause cancer, birth defects, or other reproductive harm.

Introduction

When properly installed, this attachment converts a vehicle into a dedicated turf spray application machine, and it is intended to be used by professional, hired operators in commercial applications. It is designed primarily for spraying on well-maintained lawns in parks, golf courses, sports fields, and on commercial grounds.

Read this information carefully to learn how to operate and maintain your product properly and to avoid injury and product damage. You are responsible for operating the product properly and safely.

Visit www.Toro.com for more information, including safety tips, training materials, accessory information, help finding a dealer, or to register your product.

Whenever you need service, genuine Toro parts, or additional information, contact an Authorized Service Dealer or Toro Customer Service and have the model and serial numbers of your product ready. Figure 1 identifies the location of the model and serial numbers on the product. Write the numbers in the space provided.

Important: **Important: With your mobile device, you can scan the QR code on the serial number decal (if equipped) to access warranty, parts, and other product information.**

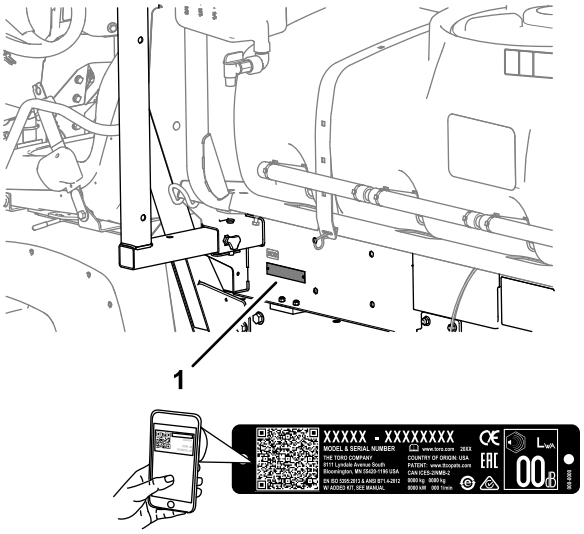

g238191

Figure 1

1. Location of the model and serial numbers

Model No. _____

Serial No. _____

This manual identifies potential hazards and has safety messages identified by the safety-alert symbol (Figure 2), which signals a hazard that may cause serious injury or death if you do not follow the recommended precautions.

g000502

Figure 2

1. Safety-alert symbol

This manual uses 2 words to highlight information. **Important** calls attention to special mechanical information and **Note** emphasizes general information worthy of special attention.

© 2026—The Toro® Company
8111 Lyndale Avenue South
Bloomington, MN 55420

Contact us at www.Toro.com.
Printed in the USA
All Rights Reserved

Contents

Safety 4
General Safety 4
Safety and Instructional Decals 5
Setup 9
1 Removing the Existing Bed 11
2 Preparing to Install the Tank Skid 11
3 Installing the Hold-Down Brackets for the Tank Skid 12
4 Installing the Tank Skid 13
5 Assembling the Drain Valve 14
6 Disconnecting the Battery 15
7 Connecting the Speed Sensor Harness 16
8 Coupling the Sprayer Pump 17
9 Installing the Control Console to the Machine 17
10 Installing the Electrical Harnesses for the Sprayer 19
11 Installing the Sprayer Fuse Block 20
12 Connecting the Sprayer Harness to the Battery 21
13 Lowering the Tank Skid 24
14 Installing the Center Boom Section 25
15 Installing the Left and Right Boom Section 26
16 Installing the Boom Hoses 28
17 Installing the Nozzles 30
18 Installing the Freshwater Tank 30
19 Installing the Anti-Siphon Fill Receptacle 32
20 Storing the Jack Stands 33
Product Overview 34
Controls 34
Specifications 37
Attachments/Accessories 37
Before Operation 38
Before Operation Safety 38
Using the InfoCenter 39
Performing Pre-Starting Checks 47
Preparing the Sprayer 47
Calibrating the Sprayer 51
Calibrating the Sprayer Speed 52
Calibrating the Section-Bypass Valves 52
Adjusting the Agitation and Master Bypass Valves 53
Locating the Spray Pump 55
During Operation 55
During Operation Safety 55
Operating the Sprayer 56
Spraying 57
Turf Care Precautions while Operating in Stationary Modes 57
Positioning the Spray Sections 58
Spraying Tips 59
Unclogging a Nozzle 59
After Operation 59
After Operation Safety 59
Cleaning the Sprayer System 59
Cleaning the Suction Filter 60
Cleaning the Pressure Filter 61
Cleaning the Nozzle Filter 62
Conditioning the Spray System 62
Transporting or Towing the Machine 63
Maintenance 64
Maintenance Safety 64
Recommended Maintenance Schedule(s) 65
Daily Maintenance Checklist 66
Notation for Areas of Concern 66
Pre-Maintenance Procedures 67
Accessing the Machine 67
Lubrication 68
Greasing the Sprayer Pump 68
Greasing the Boom Hinges 69
Electrical System Maintenance 69
Electrical System Safety 69
Replacing the Fuses 69
Spray System Maintenance 70
Inspecting the Hoses 70
Changing the Suction Filter 70
Changing the Pressure Filter 70
Changing the Nozzle Filter 71
Inspecting the Sprayer Pump 72
Inspecting the Nylon Pivot Bushings 72
Adjusting the Booms to Level 73
Cleaning 74
Cleaning the Flow Meter 74
Storage 75
Storage Safety 75
Preparing the Machine for Storage 75
Long-Term Storage 76
Preparing the Machine for Service 77
Removing the Sprayer and Tank Skid 77
Troubleshooting 80
Schematics 81

Safety

Improper use or maintenance by the operator or owner can result in injury. To reduce the potential for injury, comply with these safety instructions and always pay attention to the safety-alert symbol (Figure 2), which means Caution, Warning, or Danger—personal safety instruction. Failure to comply with the instruction may result in personal injury or death.

General Safety

This product is capable of causing personal injury. Always follow all safety instructions to avoid serious personal injury.

- Read and understand the contents of this *Operator's Manual* before starting the engine.
- Use your full attention while operating the machine. Do not engage in any activity that causes distractions; otherwise, injury or property damage may occur.
- Use appropriate personal protective equipment (PPE) to guard against contact with chemicals. Chemical substances used in the sprayer system may be hazardous and toxic.
- Do not put your hands or feet near moving components of the machine.
- Do not operate the machine without all guards and other safety protective devices in place and working on the machine.
- Keep clear of any discharge area of the sprayer nozzles and spray drift. Keep bystanders and children out of the operating area.
- Never allow children to operate the machine.
- Park the machine on a level surface, engage the parking brake, shut off the engine, remove the key (if equipped), and wait for all movement to stop before you leave the operator's position. Allow the machine to cool before adjusting, servicing, cleaning, or storing it.

Improperly using or maintaining this machine can result in injury. To reduce the potential for injury, comply with these safety instructions and always pay attention to the safety-alert symbol ⚠, which means Caution, Warning, or Danger—personal safety instruction. Failure to comply with these instructions may result in personal injury or death.

Not all the attachments that adapt to this machine are covered in this manual. Refer to the operator's manual provided with each attachment for additional safety instructions.

Safety and Instructional Decals

Safety decals and instructions are easily visible to the operator and are located near any area of potential danger. Replace any decal that is damaged or missing.

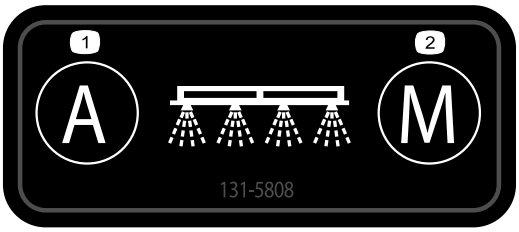

decal131-5808

131-5808

1. Automatic—closed loop-rate control
2. Manual—open loop-rate control

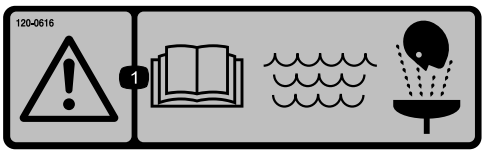

decal120-0616

120–0616

1. Warning—read the *Operator's Manual*; use fresh, clean water for first-aid washing.

decal120-0622

120–0622

1. Warning—read the *Operator's Manual*.
2. Warning—do not enter the sprayer tank.
3. Chemical burn hazard; toxic gas inhalation hazard—wear hand and skin protection; wear eye and respiratory protection.

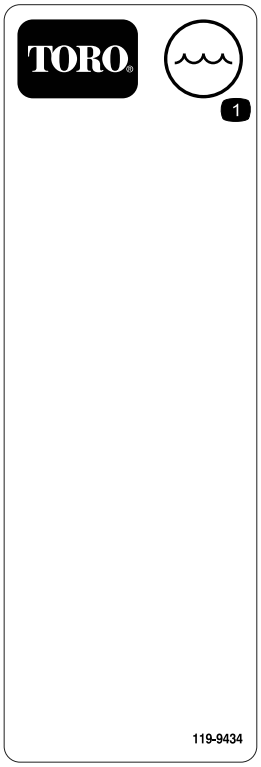

decal119-9434

119-9434

1. Tank contents

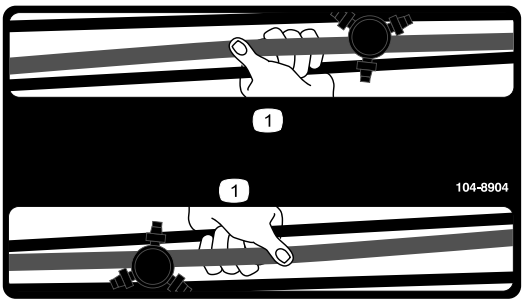

decal104-8904

104-8904

1. Grasp the boom here.

decal127-6976

127-6976

1. Decrease
2. Increase

decal120-0617

120–0617

1. Severing hazard of hand, pinching point—keep away from actuated joints.
2. Crushing hazard—keep bystanders away from the machine.

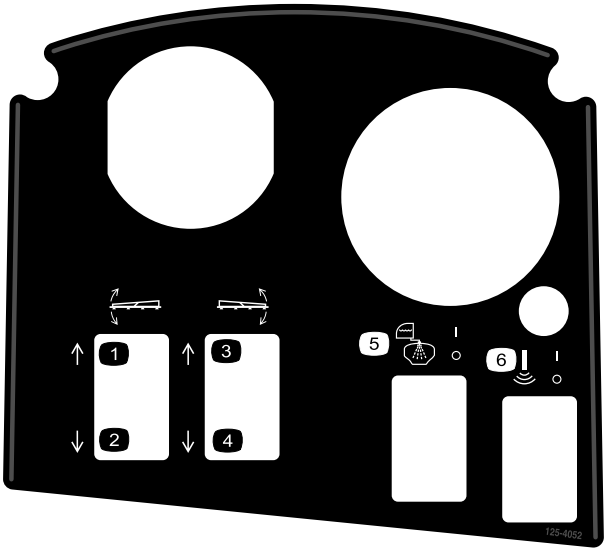

decal125-4052

125–4052

1. Raise left boom
2. Lower left boom
3. Raise right boom
4. Lower right boom
5. Toggle tank rinse on/off
6. Toggle sonic boom on/off

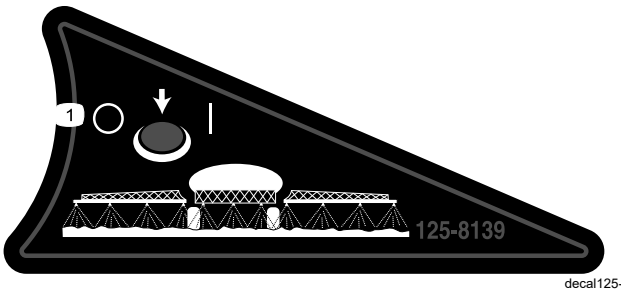

decal125-8139

125–8139

1. Toggle boom sprayers on/off

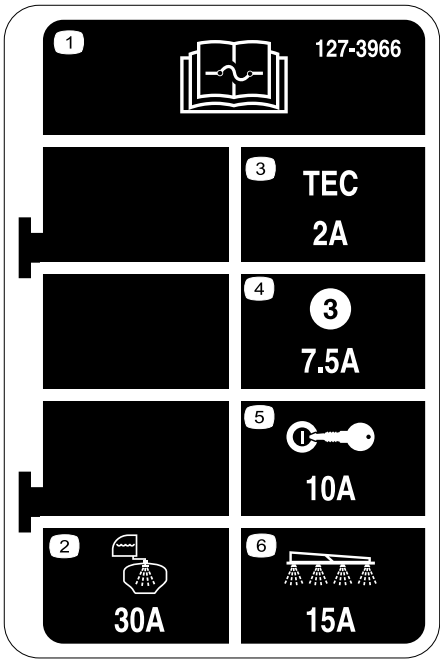

decal127-3966

127–3966

1. Read the *Operator's Manual* for information on fuses.
2. 30 A—Tank rinse
3. 2 A—TEC controller logic
4. 7.5 A—TEC controller output
5. 10 A—Ignition
6. 15 A—Sprayer boom

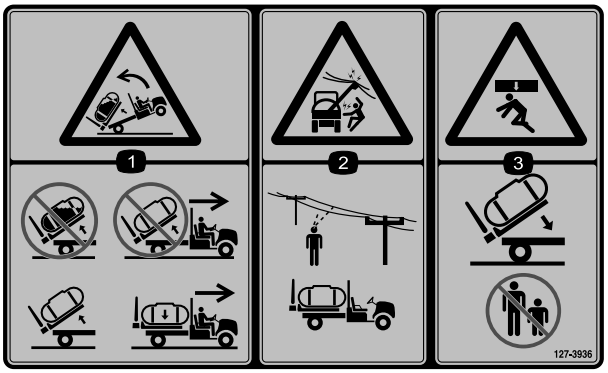

decal127-3936

127–3936

1. Backward tipping hazard—do not raise a full tank; do not move the machine with a raised tank; only raise and empty tank; only move the machine with a lowered tank.
2. Electrical shock hazard, overhead power lines—check the area for overhead power lines before operating the machine in the area.
3. Crushing hazard—keep bystanders away when lowering the tank.

decal127-3937

127–3937

1. Warning—do not step.
2. Warning—keep away from hot surfaces.
3. Entanglement hazard, belt—keep away from moving parts; keep all guards and shields in place.

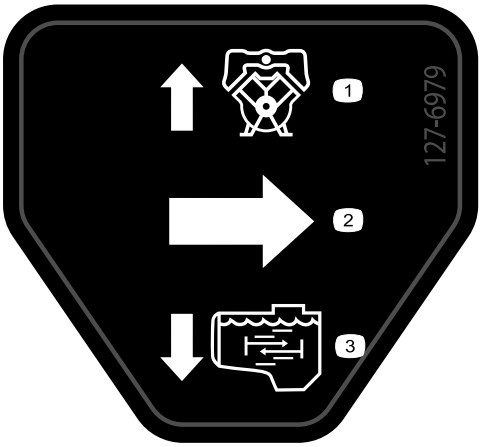

decal127-6979

127-6979

1. Bypass-return flow
2. Flow
3. Agitation flow

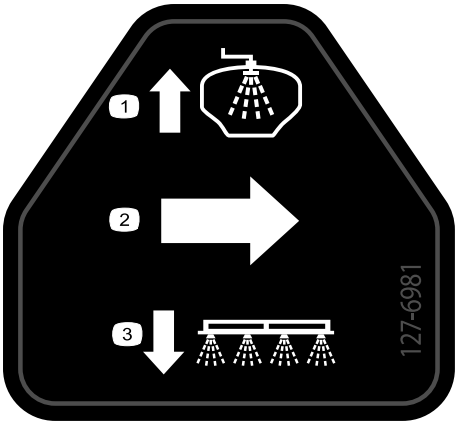

decal127-6981

127-6981

1. Bypass-return flow
2. Flow
3. Boom spray

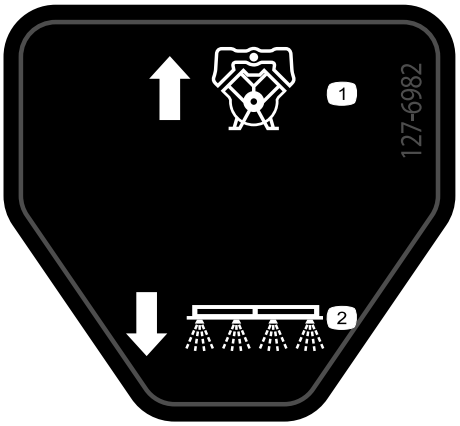

decal127-6982

127-6982

1. Bypass-return flow
2. Boom spray

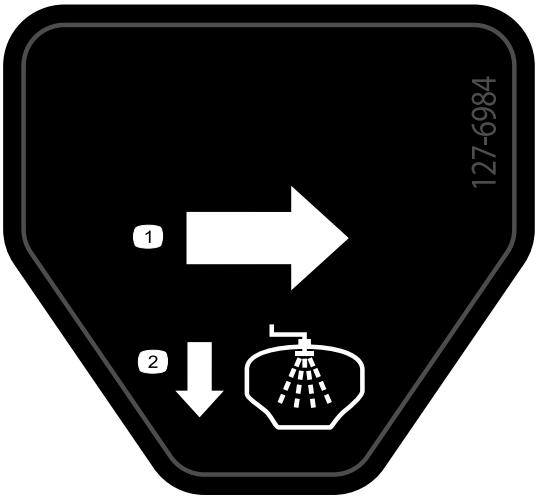

decal127-6984

127-6984

1. Flow
2. Tank-return flow

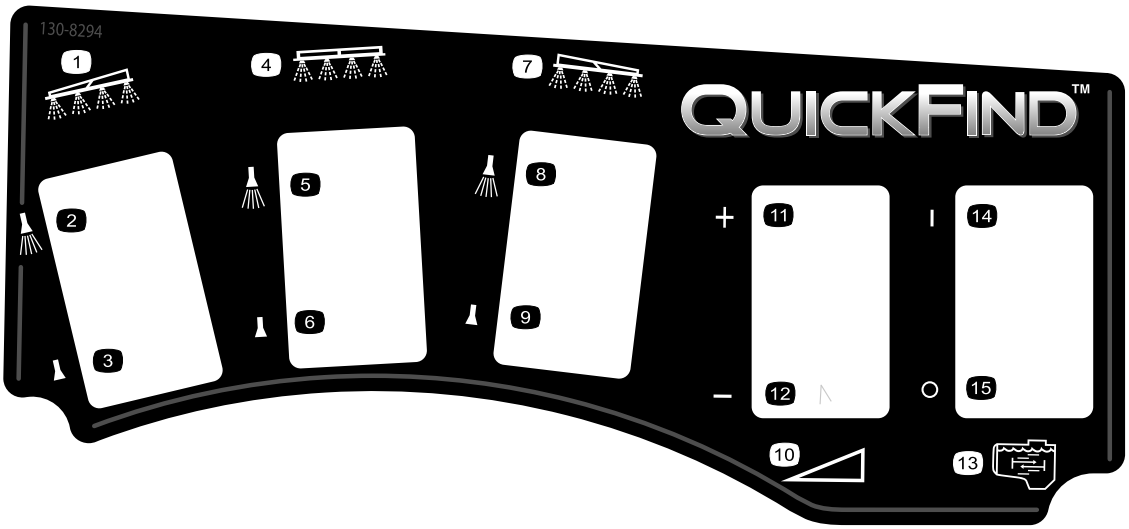

decal130-8294

130-8294

1. Left boom
2. Left boom spray on
3. Left boom spray off
4. Center boom
5. Center boom spray on
6. Center boom spray off
7. Right boom
8. Right boom spray on
9. Right boom spray off
10. Speed
11. Increase speed
12. Decrease speed
13. Agitation
14. Agitation on
15. Agitation off

Setup

Loose Parts

Use the chart below to verify that all parts have been shipped.

Procedure	Description	Qty.	Use
1	No parts required	–	Remove the existing bed.
2	Rear PTO Kit, Heavy-Duty Workman Vehicle (HD-Series Models with a Manual Transmission) Multi Pro WM Turf Sprayer Finishing Kit, Manual Workman Utility Vehicle (HD-Series Models with a Manual Transmission)	1 1	Prepare to install the center boom section.
3	Hold-down brackets	2	Install the attachment hold-down brackets.
4	Tank and skid assembly Clevis pins Tapered clevis pin Hairpins Lynch pins Bolt (1/2 x 1-1/2 inches) Nuts (1/2 inch)	1 2 2 2 4 2 2	Install the tank skid.
5	No parts required	–	Assemble the drain valve.
6	No parts required	–	Disconnect the battery.
7	No parts required	–	Connect the speed sensor harness.
8	No parts required	–	Couple the sprayer pump.
9	Console mounting bracket Flange locknut (5/16 inch) Flange-head bolt (5/16 inch) Plastic bushing Control console Spring-clip pin Hand knob	1 3 3 2 1 1 1	Install the control console to the machine.
10	J-clips Bolt (1/4 x 3/4 inch) Flange nut (1/4 inch)	3 1 1	Install the control console onto the machine.
11	Fuse decal (127–3966)	1	Install the control console and the electrical harness.
12	Battery terminal bolt Clamp nut Cover—wide (battery terminal—red)	2 2 1	Connect the sprayer harness to the battery.
13	Bolt (1/2 x 1-1/2 inch) Locknut (1/2 inch)	2 2	Lower the tank skid.

Procedure	Description	Qty.	Use
14	Center-boom assembly Bolt (3/8 x 1 inch) Flange locknut (3/8 inch) Boom-transport cradle Bolt (1/2 x 1-1/4 inches) Flange nut (1/2 inch)	1 10 10 2 4 4	Install the boom section.
15	Left boom section Right boom section Flange-head bolts (3/8 x 1-1/4 inches) Backing plates Flange locknuts (3/8 inch) Clevis pin Hairpin	1 1 8 8 8 2 2	Install the left and right boom sections.
16	Hose clamps R-clamp Shoulder bolt Washer Nut	3 2 2 2 2	Install the boom hoses.
18	Freshwater tank 90° elbow (3/4 inch NPT) 90° spigot Freshwater-tank mount Mount strap Flange-head bolt (5/16 x 5/8 inch) Flange locknut (5/16 inch) Support tube (freshwater tank) Jam nut (5/16 inch) Bolt (5/16 x 1 inch) Shoulder bolt (1/2 x 1-15/16 inches) Bolt (5/16 x 2-1/4 inches) Washer (5/16 inch)	1 1 1 1 4 4 10 1 1 1 2 2 2	Install the freshwater tank.
19	Fill receptacle assembly Flange-head bolt (5/16 x 3/4 inch)	1 1	Install the anti-siphon fill receptacle.
20	Front jack stand Rear jack stand Cotter pin Clevis pin (4-1/2 inches) Clevis pin (3 inches) Knob	2 2 4 2 2 2	Store the jack stands (optional).

Important: **The Multi-Pro WM turf sprayer requires a 4-post ROPS or cab installed with the Workman vehicle.**

Model 41240 with serial number of 416500000 and up can only be installed on Workman HDX machines with a manual transmission.

Important: **This sprayer is sold without spray nozzles.**

To use the sprayer, *you must obtain and install the nozzles*. Contact your authorized Toro distributor for information on the available section kit and accessories.

After you install your nozzles and before using the sprayer for the first time, adjust the section bypass valves so that the pressure and application rate remains the same for all sections when you turn 1 or more sections off. Refer to Calibrating the Sprayer Flow (page 51).

Note: Look for the information symbol ⓘ when installing this with the GeoLink system.

1

Removing the Existing Bed

No Parts Required

Procedure

⚠ CAUTION

The full bed weighs approximately 95 kg (210 lb). You can injure yourself if you remove the bed without aid.

- **Do not try to install or remove the bed by yourself.**
- **Get the help of 2 or 3 other people or use an overhead crane.**

1. Park the machine on a level surface, engage the parking brake, and start the engine.
2. Move the hydraulic lift lever forward and lower the bed until the clevis pins for the cylinder rod end lift cylinders are loose in the mounting slots of the bed mounting plates.
3. Release the hydraulic lift lever, set the hydraulic lift lock lever, shut off the engine, and remove the key; refer to the *Operator's Manual* of your machine.
4. Remove the lynch pins from the outer ends of the cylinder rod clevis pins (Figure 3).

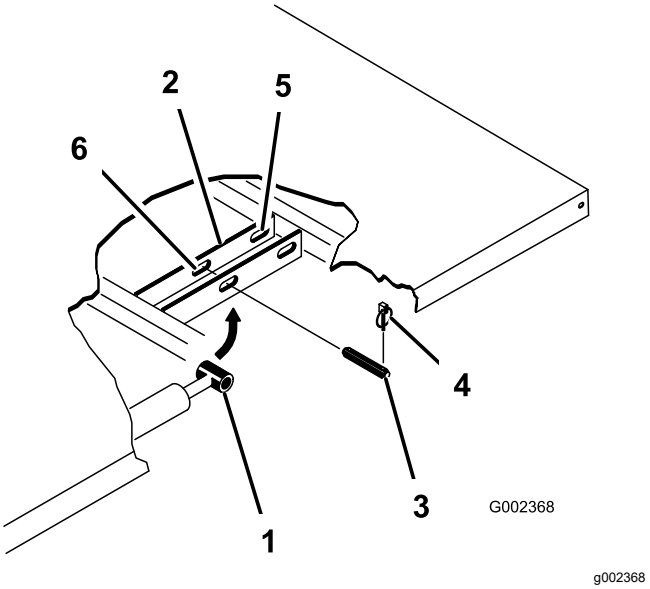

Figure 3

1. Cylinder rod end
2. Bed mounting plate
3. Clevis pin
4. Lynch pin
5. Rear slots (full bed)
6. Front slots (2/3 bed)

5. Remove the clevis pins securing the cylinder rod ends to the bed mounting plates by pushing the pins toward the centerline of the machine (Figure 3).
6. Remove the lynch pins and clevis pins securing the pivot brackets of the bed to the frame channels of the machine (Figure 4).

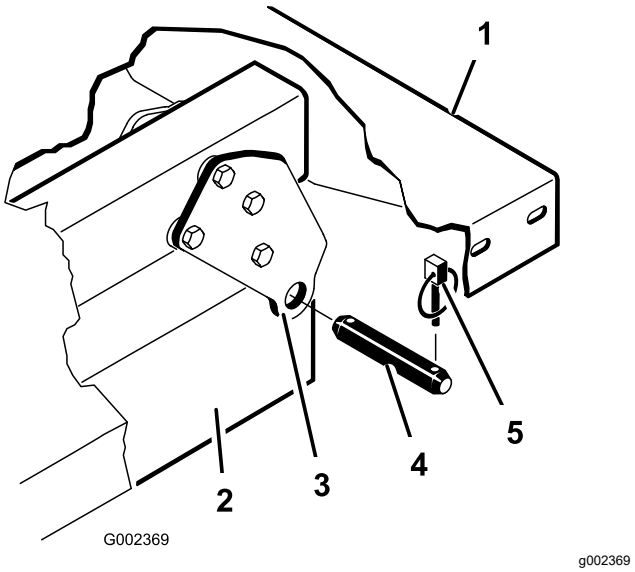

Figure 4

1. Left, rear corner of bed
2. Vehicle frame channel
3. Pivot plate
4. Clevis pin
5. Lynch pin

7. Lift the bed off the vehicle.
8. Stow the lift cylinders in storage clips.

2

Preparing to Install the Tank Skid

Parts needed for this procedure:

1	Rear PTO Kit, Heavy-Duty Workman Vehicle (HD-Series Models with a Manual Transmission)
1	Multi Pro WM Turf Sprayer Finishing Kit, Manual Workman Utility Vehicle (HD-Series Models with a Manual Transmission)

Installing the Rear PTO Kit for Heavy Duty Workman Vehicles (HD-Series Models with a Manual Transmission)

For HD- and HDX-Series Workman models with a manual transmission, fully install the Rear PTO Kit for Heavy-Duty Workman Vehicles; refer to the *Installation Instructions* for the Rear PTO Kit for Heavy Duty Workman Vehicles.

Lifting the Sprayer Skid

Using lifting equipment with a 408 kg (900 lb) lift capacity, lift the tank skid from the shipping crate at the 2 front and 2 rear lift points (Figure 5).

Note: Ensure that the tank skid is raised high enough to install the jack stands.

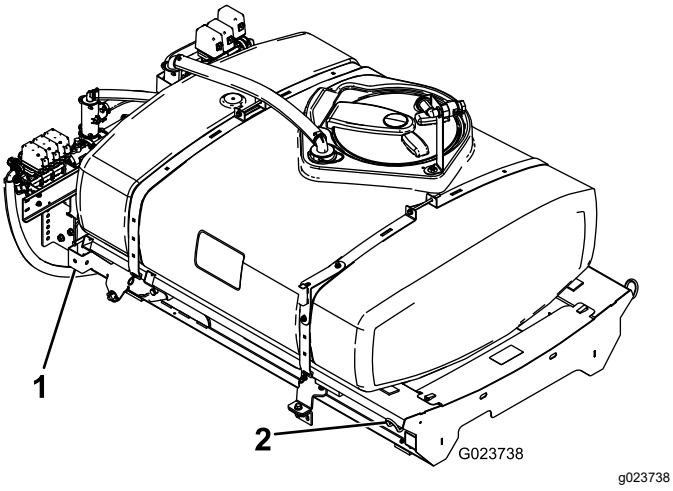

Figure 5

1. Rear lift point
2. Front lift point

Multi Pro Workman Turf Sprayer Finishing Kit (HD-Series Models with a Manual Transmission)

For HD- and HDX-Series Workman models with a manual transmission, complete the steps in the Multi Pro WM Turf Sprayer Finishing Kit for Manual Workman Utility Vehicles.

3

Installing the Hold-Down Brackets for the Tank Skid

Parts needed for this procedure:

2	Hold-down brackets

Procedure

1. Remove the 2 rear flange-head bolts and 2 flange locknuts that secure the support bracket for the engine tube to the frame of the machine (Figure 6).

   Note: Retain the fasteners for later use.

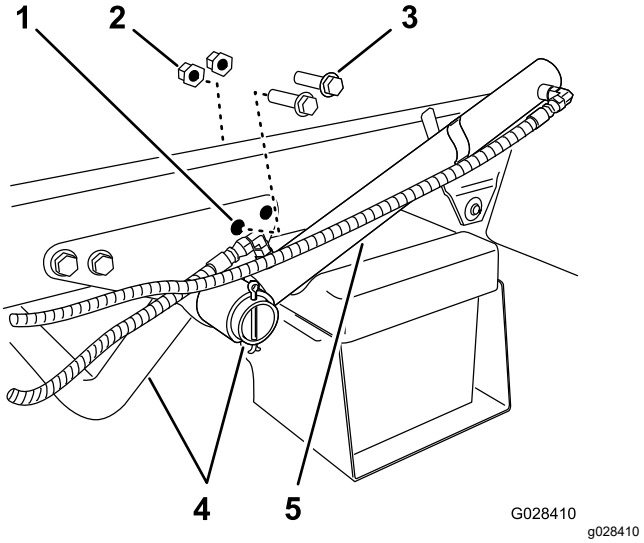

Figure 6

1. Rear hole—support bracket (engine tube)
2. Flange locknut
3. Flange-head bolt
4. Engine support tube
5. Lift cylinder

2. Rotate the lift cylinder to provide clearance to install the hold-down bracket for the tank skid (Figure 6).

3. Assemble the hold-down brackets to support bracket and frame the using the 2 flange-head bolts and flange locknuts removed in step 1 (Figure 7).

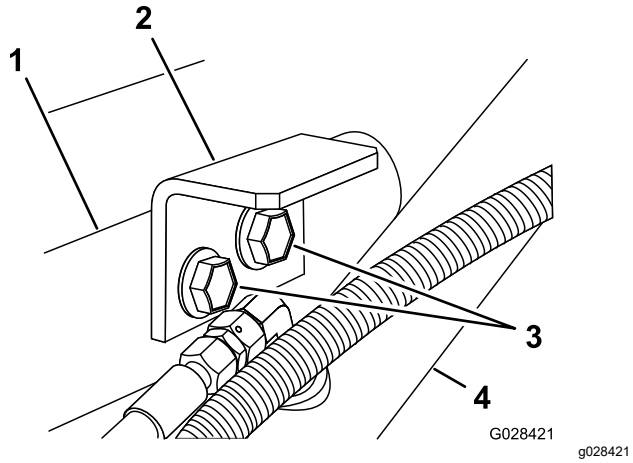

Figure 7

1. Support bracket (engine tube)
2. Hold-down bracket (tank skid)
3. Flanged-head bolts
4. Lift cylinder

4. Torque the bolts and nuts to 91 to 113 N·m (67 to 83 ft-lb).
5. Repeat steps 1 to 4 at the opposite side of the machine.

4

Installing the Tank Skid

Parts needed for this procedure:

1	Tank and skid assembly
2	Clevis pins
2	Tapered clevis pin
2	Hairpins
4	Lynch pins
2	Bolt (1/2 x 1-1/2 inches)
2	Nuts (1/2 inch)

Procedure

⚠ DANGER

The sprayer tank assembly represents a stored energy hazard. If not properly retained when installing or removing the assembly, it can move or fall and injure you or other bystanders.

Use straps and an overhead lift to support the sprayer tank assembly during installation, removal, or any maintenance whenever you remove retaining fasteners.

1. Using a lift, raise the tank skid assembly (Figure 8) and position it over the vehicle frame with the pump and valve assemblies facing rearward.

   Note: Have another person help you perform the following steps.

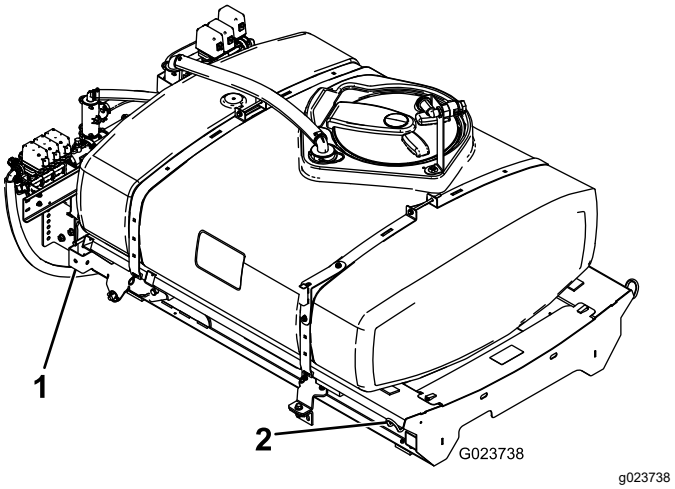

Figure 8

1. Rear lift point
2. Front lift point

2. Slowly lower the tank skid onto the frame of the machine.
3. Extend the lift cylinders to the brackets on the tank skid, and align the cylinder fittings with the holes in the tank skid brackets (Figure 9).

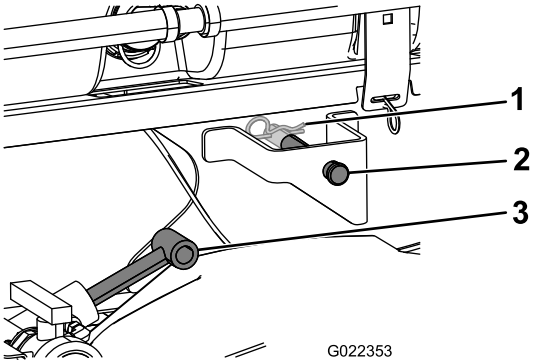

g022353

Figure 9

1. Hairpin
2. Clevis pin
3. Lift cylinders

4. Secure the tank skid to the lift cylinders with the clevis pins and hairpins at both sides of the machine.
5. Line up the holes in the pivot lugs at the rear of the tank skid assembly with the holes in the bed pivot tube at the end of the vehicle frame (Figure 10).

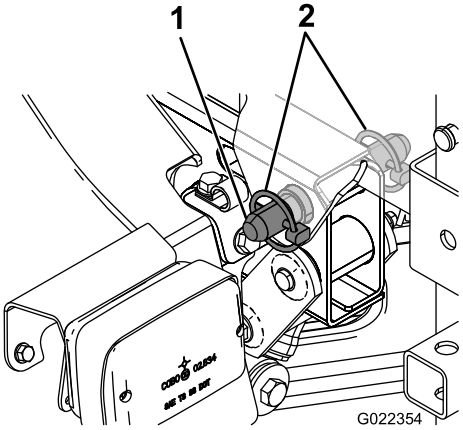

g022354

Figure 10

1. Tapered clevis pin
2. Lynch pin

6. Install a tapered clevis pin and 2 lynch pins to the pivot lug to secure the tank assembly to the frame (Figure 10).
7. Extend the lift cylinders to raise the tank and support its weight.

   Note: Disconnect the tank assembly from the lifting equipment.
8. Remove the bed support from the storage brackets on back of the ROPS panel (Figure 11).

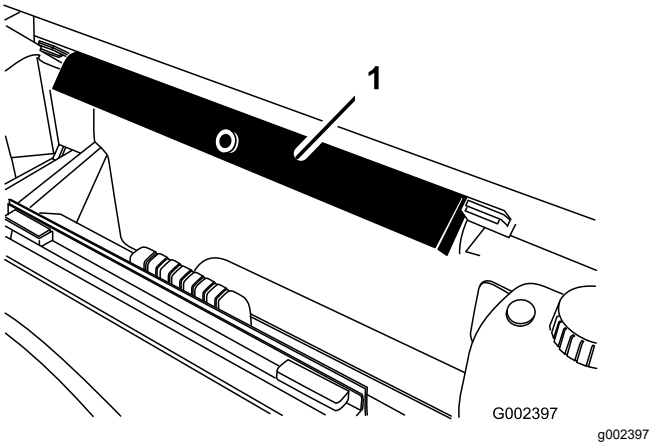

g002397

Figure 11

1. Bed support

9. Push the bed support onto the cylinder rod, making sure that the support end tabs rest on the end of cylinder barrel and on the cylinder rod end (Figure 12).

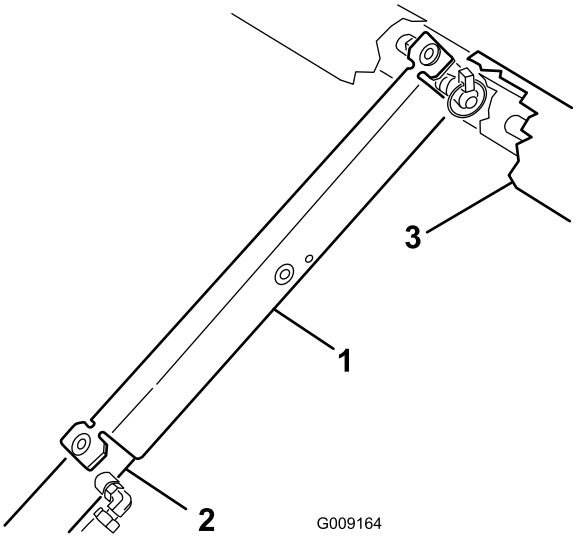

g009164

Figure 12

1. Bed support
2. Lift cylinder
3. Skid frame

5

Assembling the Drain Valve

No Parts Required

Procedure

1. Remove the cable tie that secures the drain valve and hose for the sprayer tank to the skid channel (Figure 13).

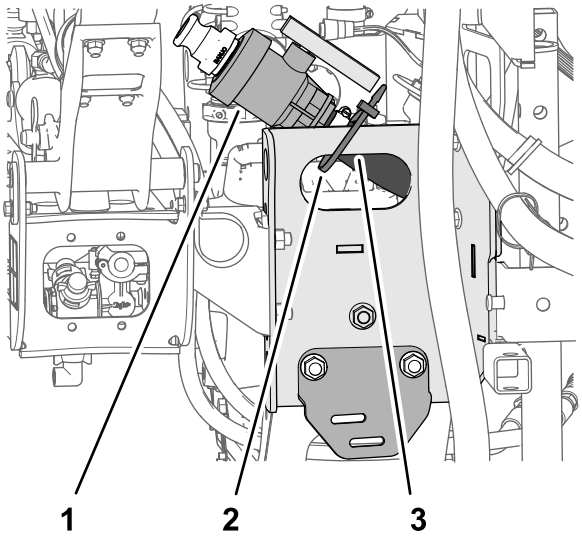

g213728

Figure 13

1. Drain valve
2. Cable tie
3. Skid channel

2. Move the drain valve and hose outboard of the skid channel (Figure 14A).

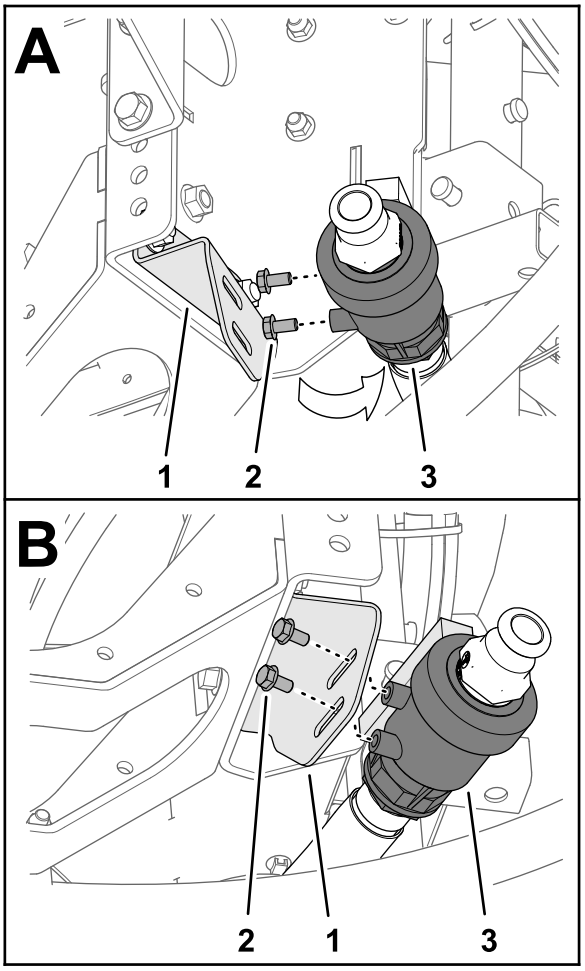

g213726

Figure 14

1. Drain valve
2. Flange-head bolt (5/16 x 5/8 inch)
3. Drain-valve bracket

3. Remove the 2 flange-head bolt (5/16 x 5/8 inch) from the case of the drain valve (Figure 14).
4. Assemble the drain valve to the drain-valve bracket (Figure 14B) with the 2 flange-head bolts (5/16 x 5/8 inch) that you removed in step 3.
5. Tighten 2 flanged-head bolts by hand (Figure 14B).

6

Disconnecting the Battery

No Parts Required

Procedure

⚠ WARNING

Incorrect battery cable routing could damage the sprayer and cables causing sparks. Sparks can cause the battery gasses to explode, resulting in personal injury.

- **Always disconnect the negative (black) battery cable before disconnecting the positive (red) cable.**
- **Always connect the positive (red) battery cable before connecting the negative (black) cable.**

⚠ WARNING

Battery terminals or metal tools could short against metal sprayer components causing sparks. Sparks can cause the battery gasses to explode, resulting in personal injury.

- **When removing or installing the battery, do not allow the battery terminals to touch any metal parts of the sprayer.**
- **Do not allow metal tools to short between the battery terminals and metal parts of the sprayer.**

1. Squeeze the sides of the battery cover to release the tabs from the slots in the battery base, and remove the battery cover from the battery base (Figure 15).

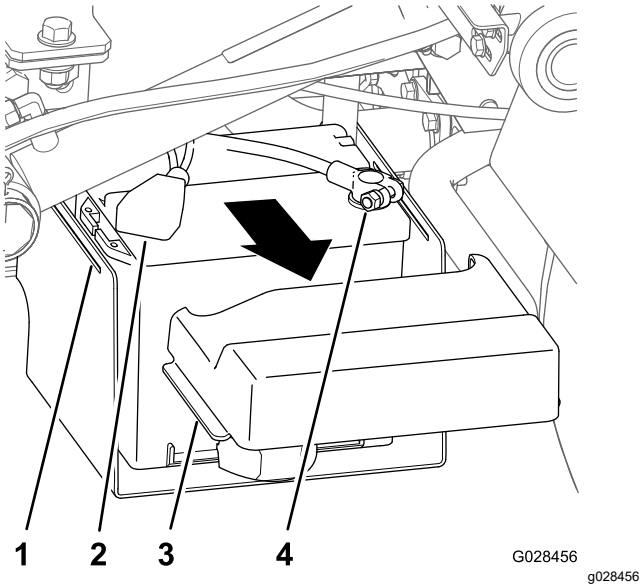

Figure 15

1. Slot (battery base)
2. Cover (positive battery terminal)
3. Tab (battery cover)
4. Terminal (negative battery cable)

2. Slide the cover back and remove the negative battery terminal from the battery (Figure 15).
3. Remove the positive battery terminal from the battery (Figure 15).

7

Connecting the Speed Sensor Harness

No Parts Required

Connecting the Speed Sensor Harness (HD-Series Models with a Manual Transmission)

1. At the wire harness for the sprayer, locate the 3-socket connector for the speed sensor circuit and the 3-pin connector for the vehicle circuit.
2. At the transaxle of the machine, connect the 3-pin connector of the wire harness of the machine for speed sensor into the 3-socket connector of the sprayer harness for the speed sensor (Figure 16).

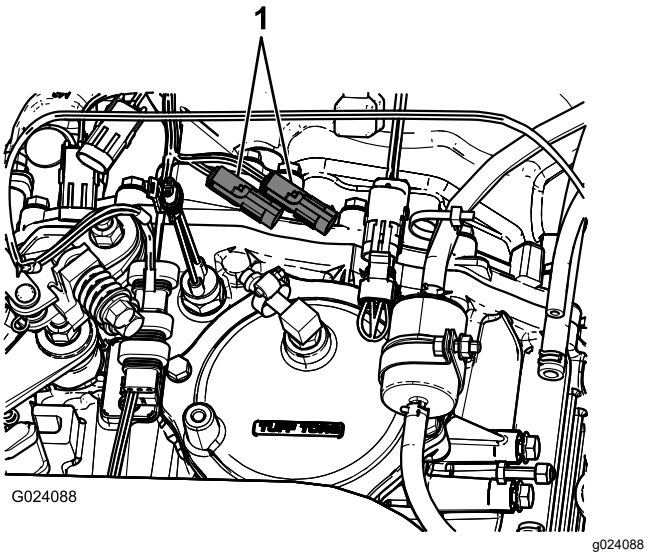

Figure 16

1. Existing speed sensor plugs

3. Connect the 3-pin connector for the vehicle circuit of the wire harness of the sprayer into the 3-pin socket for the vehicle circuit of the wire harness for the machine.

8

Coupling the Sprayer Pump

No Parts Required

Procedure

Refer to the *Installation Instructions* for the Multi Pro WM Turf Sprayer Finishing Kit, Manual Workman Utility Vehicle.

9

Installing the Control Console to the Machine

Parts needed for this procedure:

1	Console mounting bracket
3	Flange locknut (5/16 inch)
3	Flange-head bolt (5/16 inch)
2	Plastic bushing
1	Control console
1	Spring-clip pin
1	Hand knob

Installing the Console Mounting Bracket

Note: On some Workman vehicles, the control mount plate is attached to the dashboard at the same location where the bracket for the optional hand throttle kit is mounted. If the hand throttle kit is installed, you need to remove the bracket of the hand throttle assembly from the dashboard, align the control mount plate to the dash, and install the hand throttle bracket on top of the control mount plate. Refer to the Hand Throttle Kit *Installation Instructions* for directions on removing and installing the hand throttle assembly.

1. Remove the 3 bolts and 3 nuts that secure the lower-center portion of the dash panel to the dash support bracket (Figure 17).

   Note: Some older Workman machines may use 4 bolts and flange nuts.

   Note: Discard the bolts and nuts.

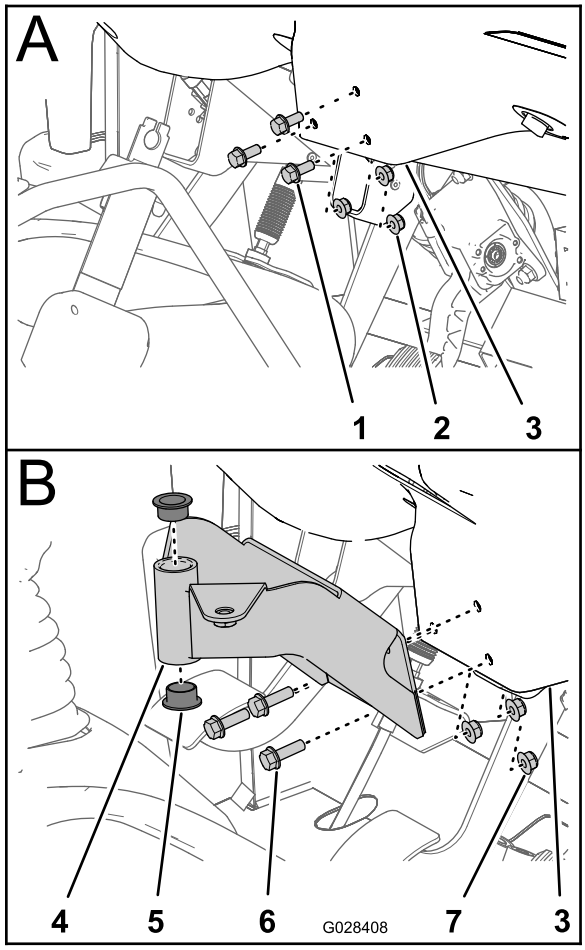

g028408

Figure 17

1. Bolt
2. Nut
3. Cash panel (lower center area)
4. Mounting bracket (control console)
5. Bushing (plastic)
6. Flange-head bolts (5/16 x 1 inch)
7. Flange locknuts (5/16 inch)

2. Align the holes in the mounting bracket for the control console with the holes in the dash and support bracket (Figure 17).
3. Assemble the mounting bracket dash panel and support bracket with the 3 flange-head bolts (5/16 x 1 inch) and 3 flange locknuts (5/16 inch).
4. Torque the nuts and bolts to (Figure 17).
5. Insert the 2 plastic bushings into the mounting bracket (Figure 17).

Installing the Control Console to the Machine

1. Remove the hairpin securing the pivot pin of the control console to the storage bracket on the sprayer tank.
2. Install the control console onto the control mounting bracket and secure the control console with the spring-clip pin (Figure 18).

   Note: Ensure that the spring clip is rotated over the pivot pin to positively secure the spring-clip pin.

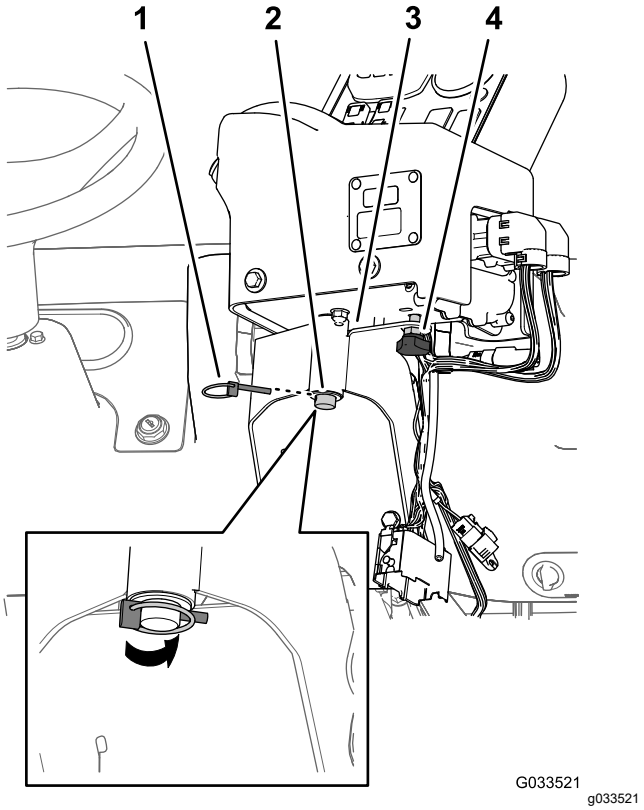

g033521

Figure 18

1. Spring-clip pin
2. Pivot pin (control console)
3. Control mounting bracket
4. Hand knob

3. Install the hand knob and tighten it to prevent the console from rotating during operation (Figure 18).

10

Installing the Electrical Harnesses for the Sprayer

Parts needed for this procedure:

3	J-clips
1	Bolt (1/4 x 3/4 inch)
1	Flange nut (1/4 inch)

Routing the Rear Electrical Harness for the Sprayer to the Control Console

1. Install 2 J-clips in the center console using the existing screws.

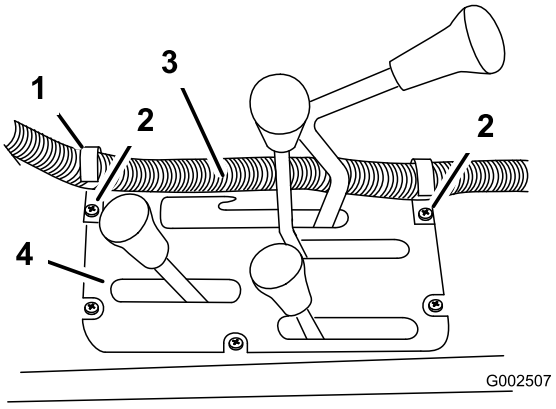

g002507

Figure 19

1. J-clip
2. Existing screws
3. Control-box harness
4. Center console

2. Install a J-clip behind the passenger seat using a bolt (1/4 x 1/2 inch) and a flanged nut (1/4 inch).

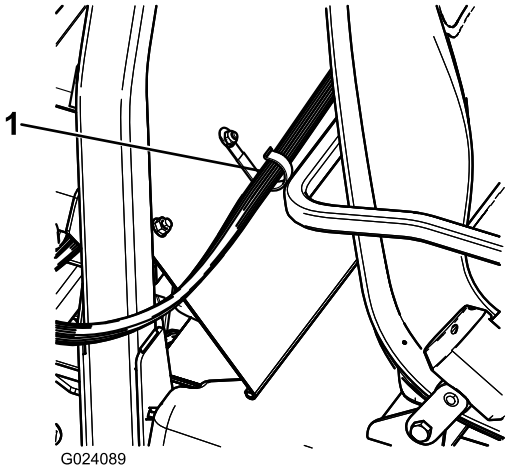

g024089

Figure 20

1. J-clip

3. Secure the control console harness to the console and ROPS cover using the J-clips.

Connecting the Rear Electrical Harness to the Front Electrical Harness at the Control Console

1. Connect the 3-pin connector of the rear wire harness for the sprayer with the 3-socket connector of the front wire harness connected to the control console.

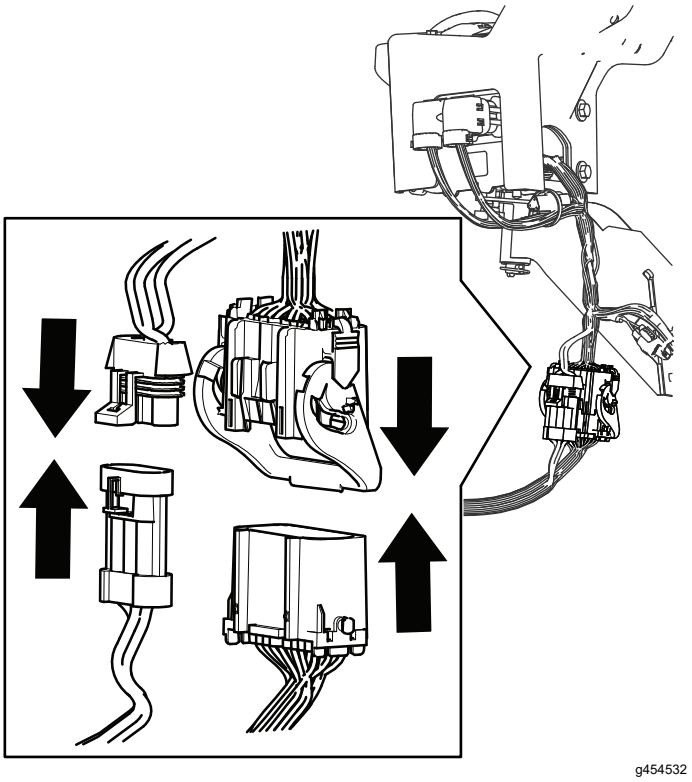

Figure 21

2. Push together the 24-pin connector of the rear wire harness for the sprayer with the 24-socket connector of the front wire harness connected to the control console.
3. Flip over the lever on the 24-pin connector to lock the 2 connectors together.

11

Installing the Sprayer Fuse Block

Parts needed for this procedure:

1	Fuse decal (127–3966)

Procedure

1. At the control console for the sprayer, route the branch of the front wire harness with the fuse blocks between the bottom of the dash panel and the cross tube of the machine chassis and down toward the forward side of the fuse block of the machine (Figure 22).

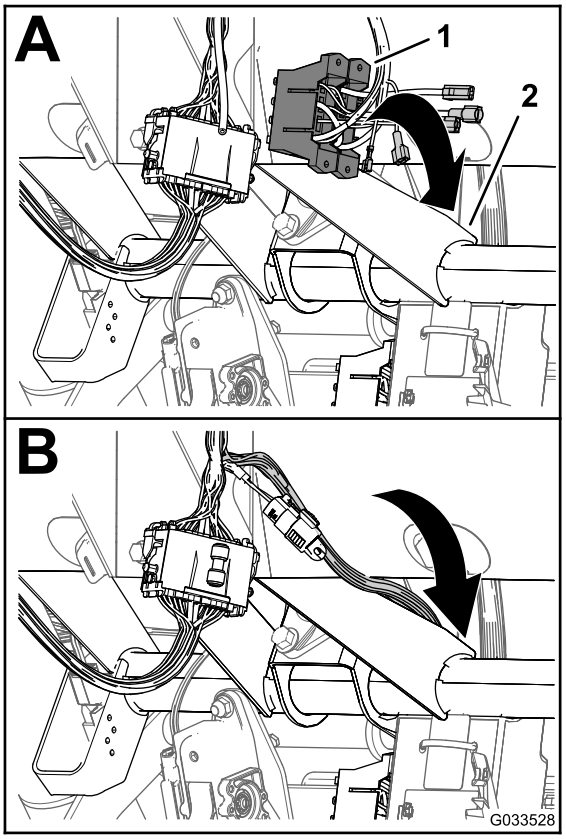

Figure 22

1. Fuse blocks (front wire harness—control console)
2. Cross tube (machine chassis)

2. Locate the uninsulated receptacle terminal at the end of the open, yellow power wire of the fuse block for the machine and the insulated blade terminal at the end of the yellow, optional power wire of the fuse block of the sprayer wiring (Figure 23).

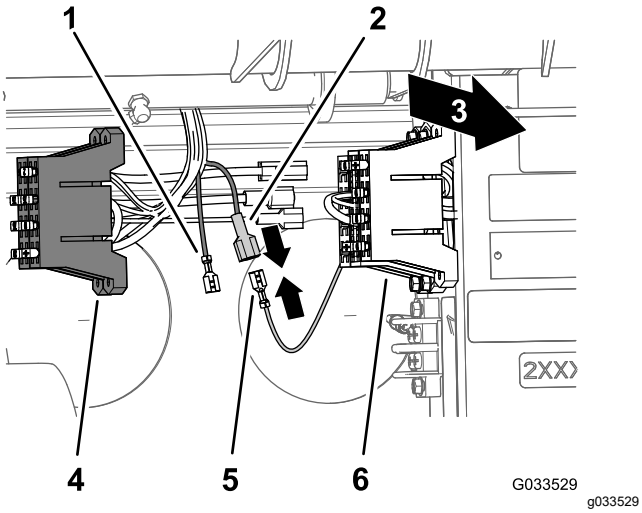

Figure 23

1. Uninsulated receptacle terminal (yellow, optional-power wire—sprayer fuse block)
2. Insulated blade terminal (yellow, optional-power wire—sprayer fuse block)
3. Back of the machine
4. Fuse block (sprayer wiring)
5. Uninsulated receptacle terminal (yellow power wire—machine fuse block)
6. Fuse block (machine wiring)

3. Connect the uninsulated receptacle terminal of the fuse block for the machine to the insulated blade terminal of the fuse block of the sprayer (Figure 23).
4. Align the T-fittings on the of the fuse block of the sprayer to the T-slots of the fuse block for the machine and slide the sprayer fuse block into the slots until the fuse block is fully seated (Figure 24).

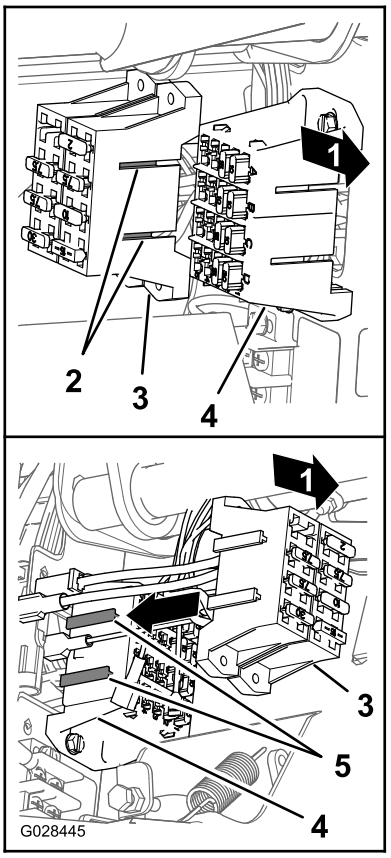

Figure 24

1. Back of the machine
2. T-fittings (fuse block for the sprayer)
3. Fuse block for the sprayer
4. T-slots (fuse block for the machine)
5. Fuse block of the machine

5. Attach the fuse decal on a surface near the fuse block for the sprayer.

12

Connecting the Sprayer Harness to the Battery

Parts needed for this procedure:

2	Battery terminal bolt
2	Clamp nut
1	Cover—wide (battery terminal—red)

Preparing the Positive Battery Terminal

Important: **Refer to the GeoLink publication for this step.**

⚠ WARNING

Incorrect battery cable routing could damage the sprayer and cables, causing sparks. Sparks can cause the battery gasses to explode, resulting in personal injury.

Always *connect* the positive (red) battery cable before connecting the negative (black) cable.

1. Remove the nuts and T-bolts at the clamps of the positive and negative battery cables.

   Note: You no longer need the nuts and T-bolts.

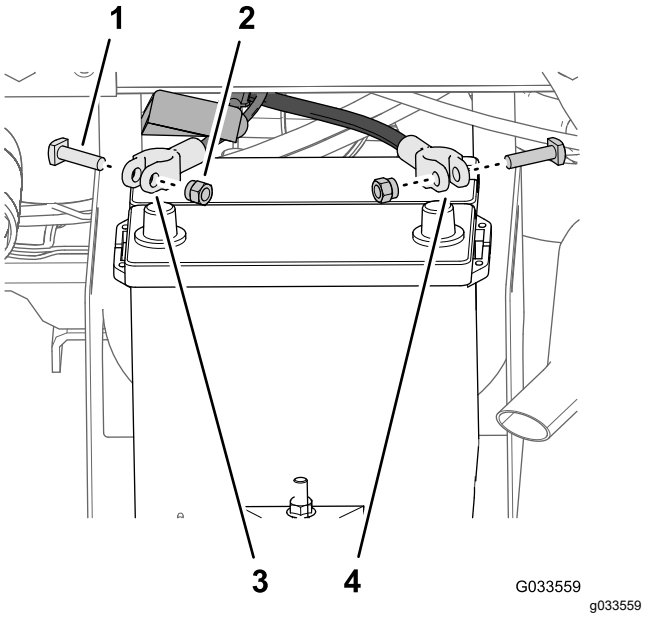

Figure 25

1. T-bolt
2. Nut
3. Positive battery cable (machine)
4. Negative battery cable (machine)

2. Remove the cover (narrow) from the positive battery cable.

   Note: You no longer need the narrow battery cover.

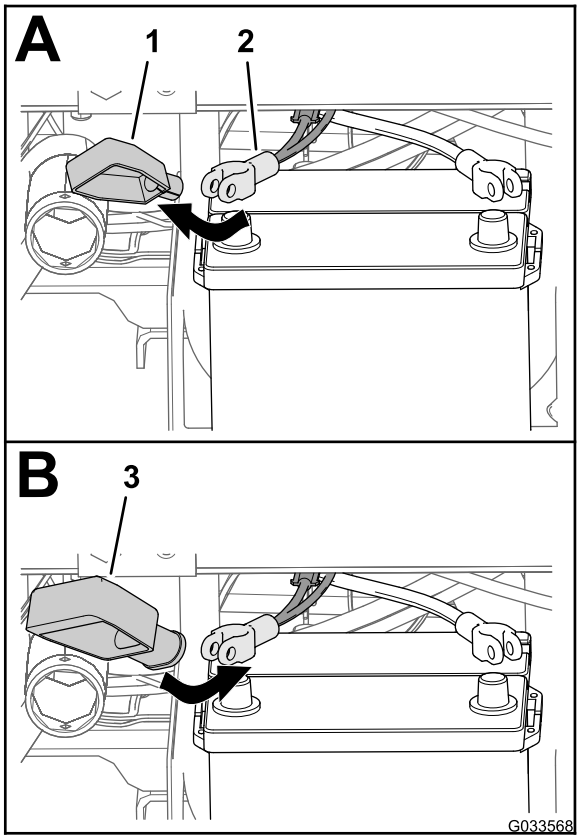

g033568

Figure 26

1. Cover–narrow (battery terminal—red)
2. Positive battery cable (machine)
3. Cover–wide (battery terminal—red)

3. Install the wide battery cover over the positive battery cable.

   Note: Slide the cover far enough over the cables to allow access to the post clamp.

4. Align the ring terminal of the fusible link (sprayer wire harness) though the wide battery cover.

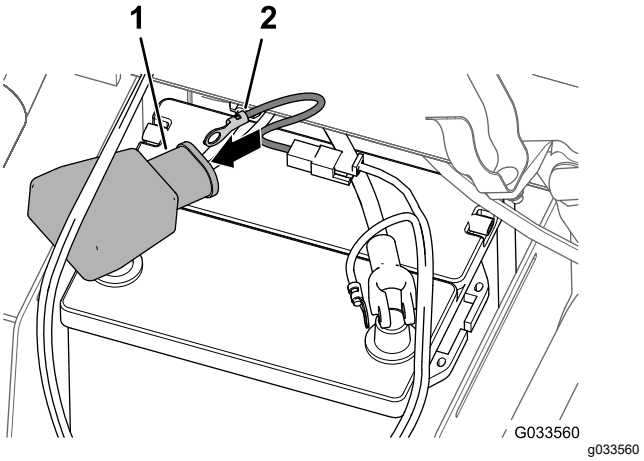

g033560

Figure 27

1. Cover–wide (battery terminal—red)
2. Terminal (fusible-link harness—sprayer harness)

5. Loosely assemble a terminal bolt and a clamp nut to the positive and negative battery-cable clamps.

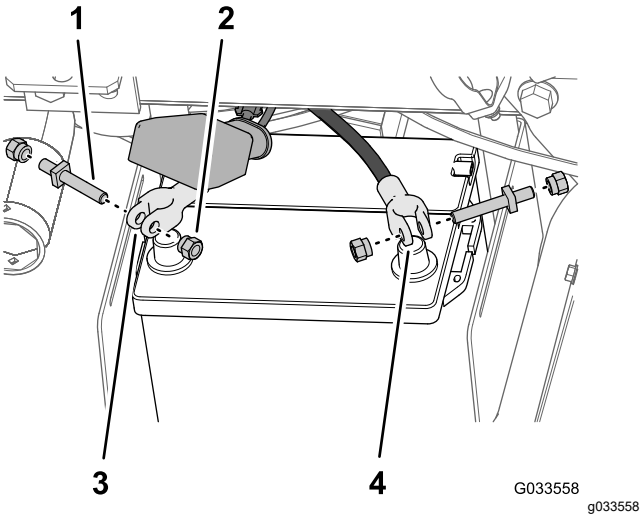

g033558

Figure 28

1. Terminal bolt
2. Clamp nut
3. Positive battery-cable clamp
4. Negative battery-cable clamp

6. Secure the ring terminal of the fusible link (sprayer wire harness) to the post of the terminal bolt that you assembled to the positive battery cable with a clamp nut.

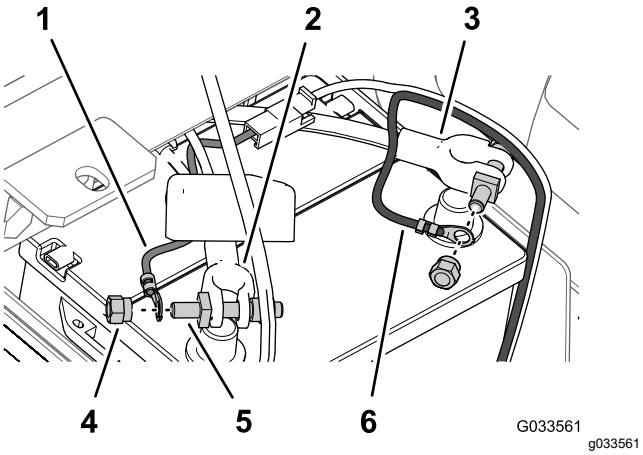

Figure 29

1. Ring terminal (fusible-link harness—sprayer harness)
2. Positive battery cable (machine)
3. Negative battery cable (machine)
4. Clamp nut
5. Terminal bolt
6. Ring terminal (negative battery wire—sprayer wire harness)

7. Secure the ring terminal of the negative wire (black—sprayer wire harness) to the post of the terminal bolt that you assembled to the negative battery cable with a clamp nut.
8. Assemble the positive battery cable onto the **positive** battery post and tighten the clamp nut by hand.

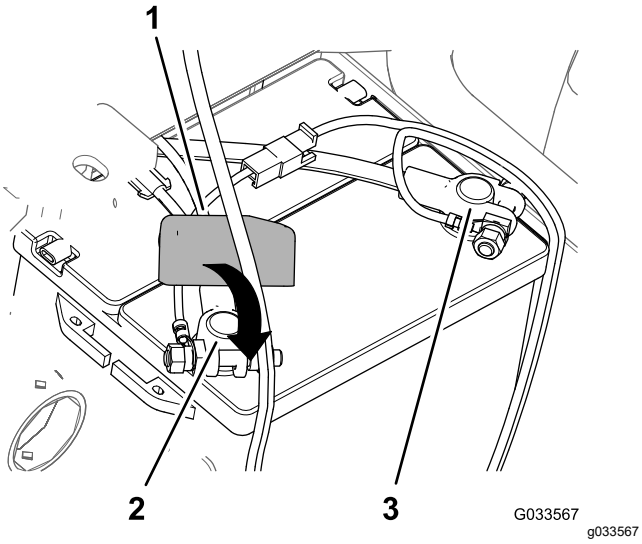

Figure 30

1. Cover–new (battery terminal—red)
2. Positive battery post
3. Negative battery post

9. Assemble the **negative** battery cable onto the negative battery post and tighten the clamp nut by hand.
10. Squeeze the sides of the battery cover, align the tabs of the cover with the slots in the battery base, and release the battery cover.

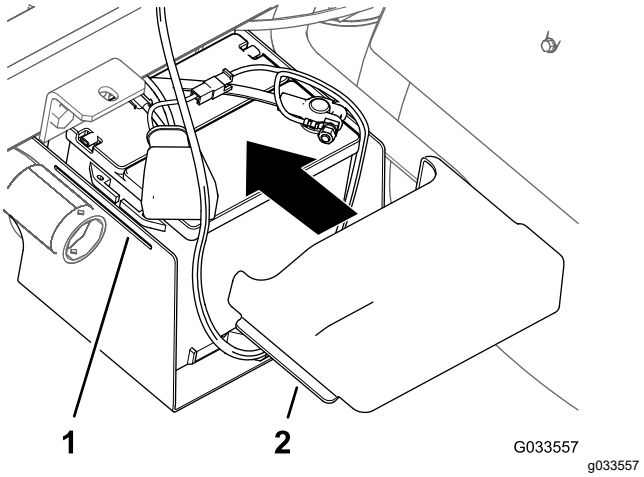

Figure 31

1. Slot (battery base)
2. Tab (battery cover)

13

Lowering the Tank Skid

Parts needed for this procedure:

2	Bolt (1/2 x 1-1/2 inch)
2	Locknut (1/2 inch)

Procedure

1. Start the machine and raise the tank skid slightly with the lift cylinders.
2. Remove the bed support from the lift cylinder and stow the support in the storage brackets at the back of the ROPS panel (Figure 32 and Figure 33).

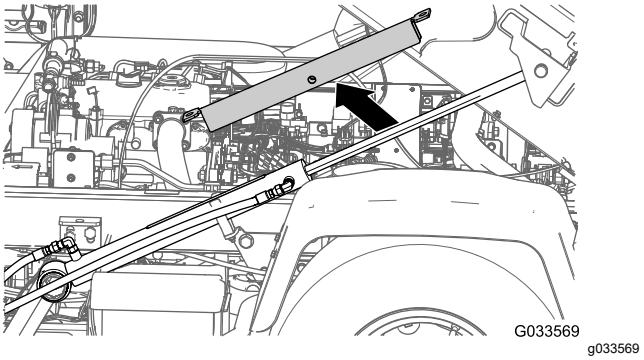

Figure 32

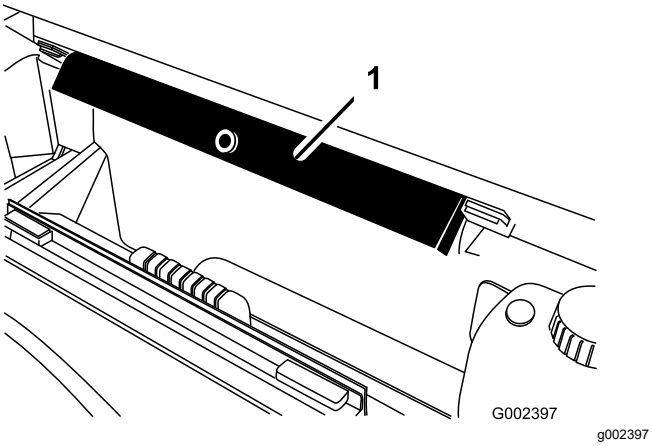

Figure 33

1. Bed support

3. Use lift cylinders to slowly lower the tank to the frame.

   Note: Have another person observe the tank skid as it lowers. Look for hoses and wiring that might become pinched or bent.

4. Check the alignment of the tank skid to the frame of the machine.
5. Remove the access panels at both sides of the skid frame (Figure 34).

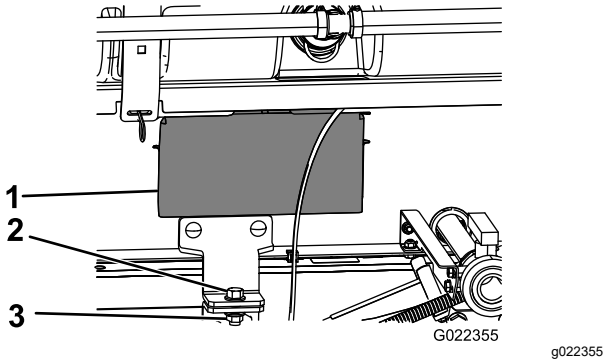

Figure 34

1. Access panel door
2. Bolt (1/2 x 1-1/2 inches)
3. Locknut (1/2 inch)

6. Check the hoses or wiring that you can see through the opening in the skid frame for signs of pinching or bending.

   Important: **If any hoses or wiring on the tank skid assembly are pinched or bent, raise the assembly up, adjust its positioning, and tie the items back.**

7. Align the front mounting brackets with the hold-down brackets installed in 3 Installing the Hold-Down Brackets for the Tank Skid (page 12).
8. Secure the hold down bracket of the tank skid assembly to the bed bracket on the frame at each side of the machine with a bolt (1/2 x 1-1/2 inches) and a locknut (1/2 inch) as shown in Figure 34.
9. Torque the bolt and locknut to 91 to 113 N·m (67 to 83 ft-lb).
10. Repeat steps 7 through 9 at the other side of the tank skid and machine.

14

Installing the Center Boom Section

ℹ Refer to the GeoLink publication for this step.

Parts needed for this procedure:

1	Center-boom assembly
10	Bolt (3/8 x 1 inch)
10	Flange locknut (3/8 inch)
2	Boom-transport cradle
4	Bolt (1/2 x 1-1/4 inches)
4	Flange nut (1/2 inch)

Assembling the Boom-Transport Cradles

1. Attach lifting equipment to the center boom section and remove it from the shipping container.
2. Align the boom transport cradles to the center boom section (Figure 35).

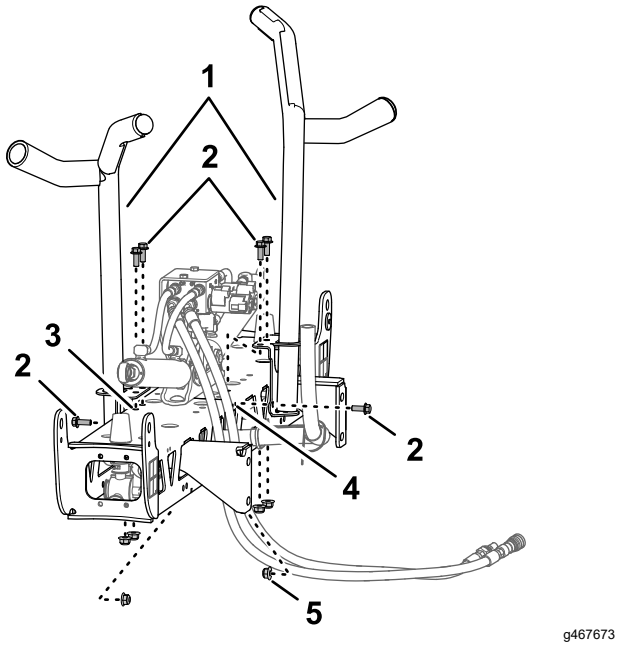

Figure 35

1. Boom-transport cradle
2. Bolts (3/8 x 1 inch)
3. Vertical holes (boom center section)
4. Horizontal hole (boom center section)
5. Flanged locknut (3/8 inch)

3. Assemble the cradles to the boom section (Figure 35 and Figure 36) with 6 bolts (3/8 x 1 inch) and 6 flanged locknuts (3/8 inch).

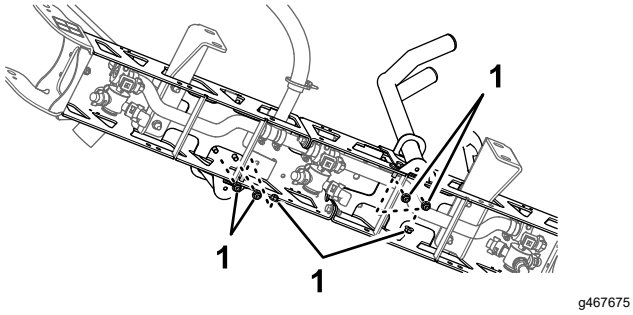

Figure 36

1. Locknuts (3/8 inch)

4. Torque the bolts and nuts to 37 to 45 N·m (27 to 33 ft-lb).

Installing the Center Boom Section to the Tank Skid

1. Start the machine, remove the bed support from the lift cylinder and stow the support, lower the tank skid, shutoff the machine, and remove the key from the starter switch.
2. Align the bottom hole in the section mounting brackets of the center boom assembly with the third hole from the bottom in the boom supports on the spray skid frame, as shown in Figure 37.

Note: If necessary, loosen the boom supports and adjusted them to the center boom section for better hole alignment. Torque the bolts and nuts to 67 to 83 N·m (91 to 113 ft-lb).

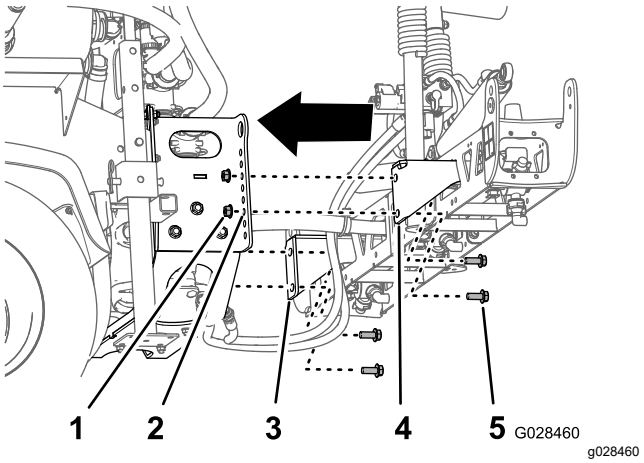

Figure 37

1. Locknut (1/2 inch)
2. Hole 3—from the bottom (boom support)
3. Section mounting bracket (left)
4. Section mounting bracket (right)
5. Bolt (1/2 x 1-1/4 inches)

3. Assemble the center boom assembly to the spray skid frame with 4 bolts (1/2 x 1-1/4 inches) and 4 locknuts (1/2 inch).
4. Torque the bolts and nuts to 67 to 83 N·m (91 to 113 ft-lb).

Connecting the Hoses and Wiring for the Boom Lift Valve

Refer to the installation instructions for the Multi Pro WM Turf Sprayer Finishing Kit, Manual Workman Utility Vehicle.

15

Installing the Left and Right Boom Section

ℹ Refer to the GeoLink publication for this step.

Parts needed for this procedure:

1	Left boom section
1	Right boom section
8	Flange-head bolts (3/8 x 1-1/4 inches)
8	Backing plates
8	Flange locknuts (3/8 inch)
2	Clevis pin
2	Hairpin

Procedure

Each boom section weighs approximately 14 kg (30 lb).

1. Remove the 4 flange-head bolts (3/8 x 1-1/4 inches), 4 backing plates, and 4 flange locknuts (3/8 inch) from the hinge bracket of the center-boom section.
2. Rotate each pivot bracket at the end of the center boom section so that the brackets align vertically.

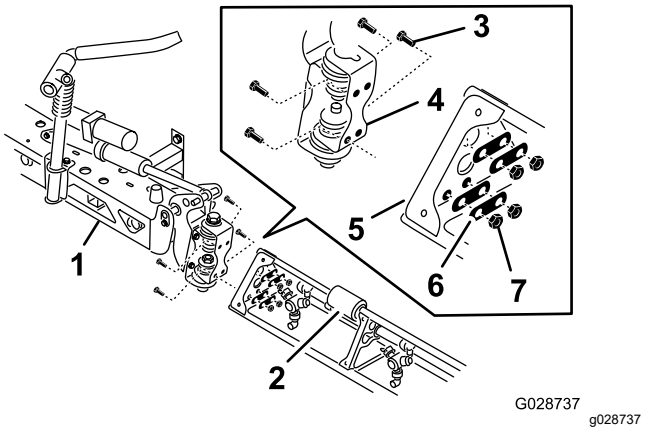

Figure 38

1. Center boom section
2. Boom extension
3. Hinge plate
4. Flange-head bolts (3/8 x 1-1/4 inches)
5. Triangular mounting plate
6. Backing plates
7. Flange locknuts (3/8 inch)

3. Lift the outer boom section and align holes in the triangular mounting plate at the end of the outer boom section with the holes in the pivot bracket.

   Note: Ensure that the turrets for the sprayer nozzles are facing rearward.
4. Assemble hinge plate to the triangular plate using previously removed hardware (4 flange-head bolts, 4 backing plates, and 4 flange locknuts).
5. Torque the nuts bolts and nuts to 37 to 45 N·m (27 to 33 ft-lb).
6. Align the rod end of the boom lift cylinder with the holes in the horn of the pivot bracket.

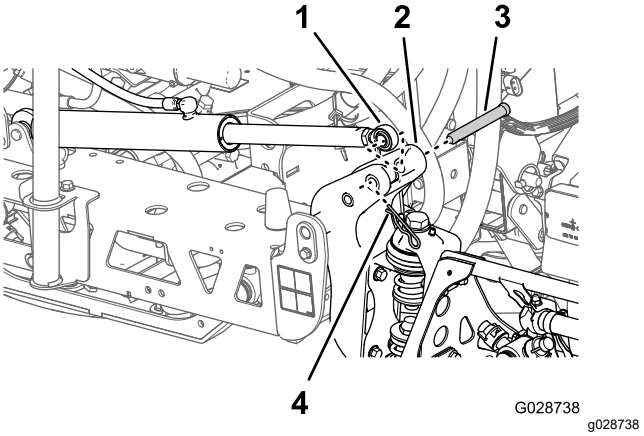

Figure 39

1. Rod end (boom lift cylinder)
2. Horn (pivot bracket)
3. Clevis pin (5/8 x 4-3/4 inches)
4. Hairpin

7. Secure the rod end to the pivot bracket with a clevis pin and a hairpin.
8. Repeat the steps on the other side of the center-boom assembly with the opposing boom section.

   Note: Before you finish this procedure, ensure that all of turrets for the spray nozzles are facing rearward.

16

Installing the Boom Hoses

ℹ Refer to the GeoLink publication for this step.

Parts needed for this procedure:

3	Hose clamps
2	R-clamp
2	Shoulder bolt
2	Washer
2	Nut

Installing the Left and Right Boom Section Hoses

1. Route the boom-section hoses as shown in Figure 40 and Figure 41.

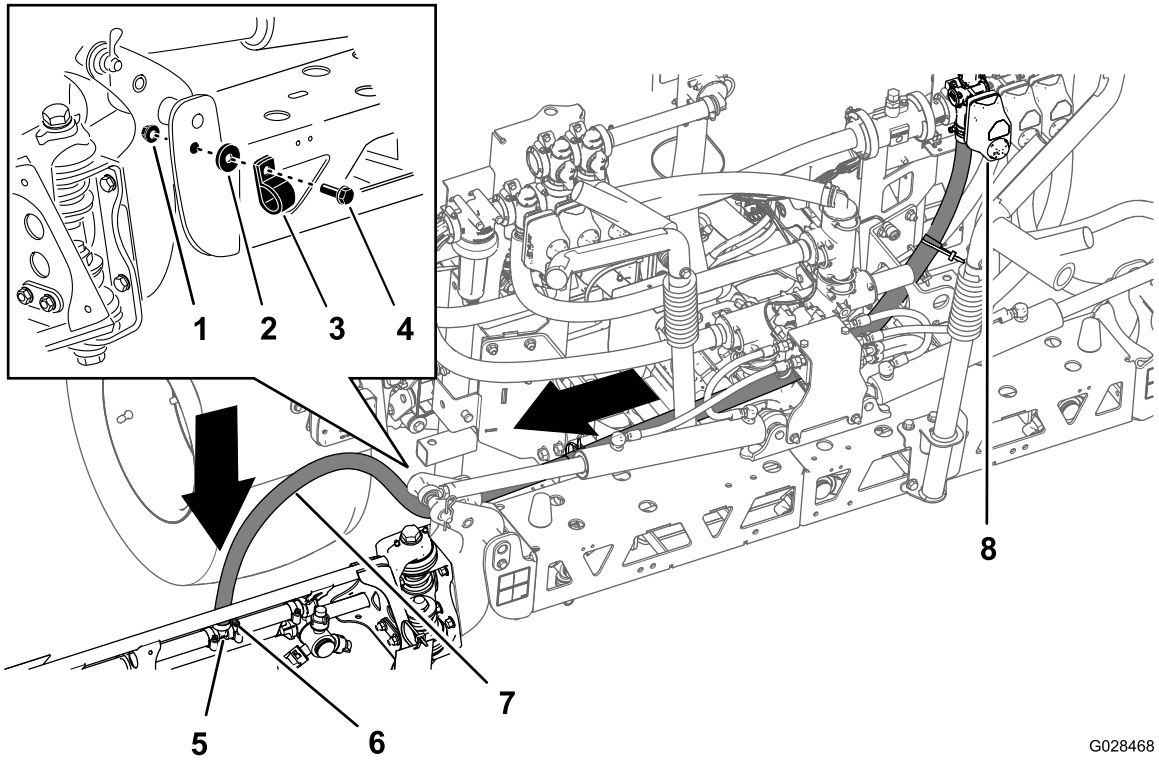

Figure 40
Hose—Left Boom Section

1. Nut
2. Washer
3. R-clamp
4. Shoulder bolt
5. T-fitting
6. Hose clamp
7. Left-boom hose
8. Left-section valve

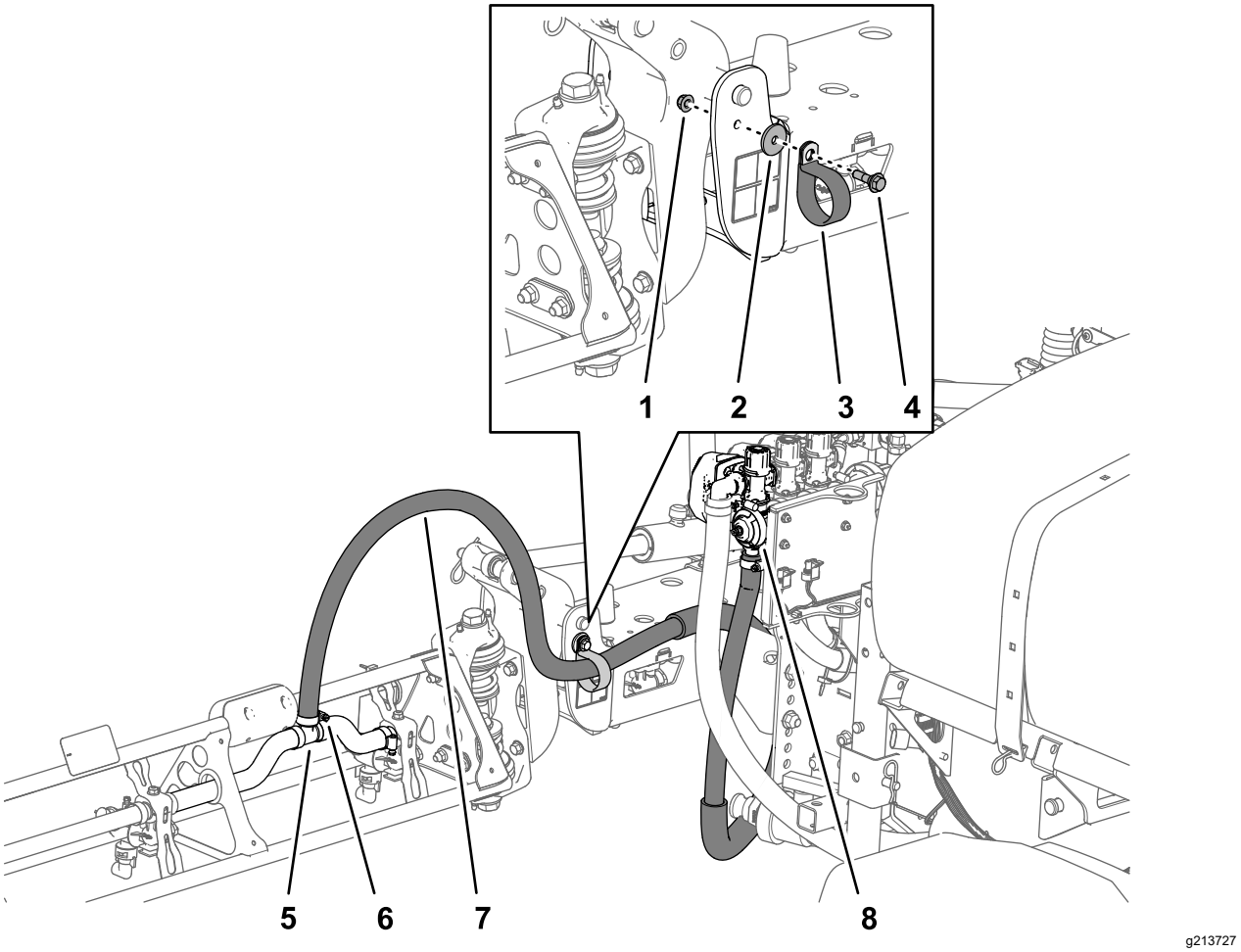

Figure 41
Hose—Right Boom Section

1. Nut
2. Washer
3. R-clamp
4. Shoulder bolt
5. T-fitting
6. Hose clamp
7. Right-boom hose
8. Right-section valve

2. Secure the boom hoses to the front side of the center boom section (Figure 40 and Figure 41) with 1 R-clamp, 1 shoulder bolt (5/16 x 1 inch), 1 locknut (5/16 inch), and 1 washer (5/16 inch).
3. Install the boom section hose over the barbed T-fitting at the boom section and secure the hose with a hose clamp (Figure 40 and Figure 41).

   Note: Apply a coat of liquid soap to the hose barb of the tee fitting to ease installation of the hose.
4. Repeat steps 1 through 3 on the hose to the boom section on the other side of the sprayer.

Installing the Center Boom-Section Hose

1. Route the center boom-section hose as shown in Figure 42.

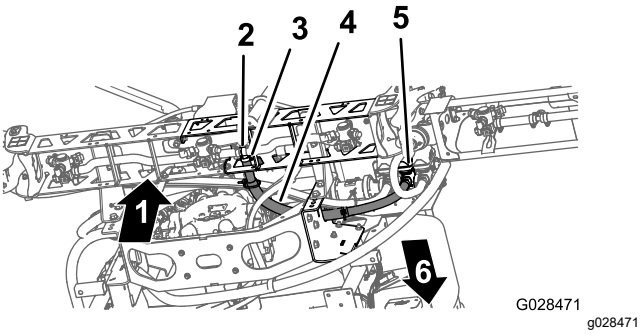

Figure 42

1. Up
2. T-fitting
3. Hose clamp
4. Center-boom hose
5. Center-section valve
6. Front of the machine

2. Install the boom section hose over the barbed T-fitting at the center boom section and secure the hose with a hose clamp (Figure 42).

   Note: Apply a coat of liquid soap to the hose barb of the tee fitting to ease installation of the hose.

17

Installing the Nozzles

No Parts Required

Procedure

The nozzles that you use to apply your chemicals vary depending on the rate of application that you need; therefore, nozzles are not supplied with the kit. To obtain the correct nozzles for your needs, contact your authorized Toro distributor and be prepared to give them then following information:

- The target application rate in liters per hectare, US gallons per acre, or US gallons per 1,000 square feet.
- The target speed of the vehicle in kilometers per hour or miles per hour.

1. Thread or insert the nozzle into the nozzle receptacle followed by a gasket.
2. Slide the nozzle receptacle over the nozzle fitting on a turret.
3. Turn the nozzle clockwise to lock the cams on the receptacle in place.
4. Verify the fan portion of the nozzle.

See the *Installation Instructions* accompanying the nozzles for more information.

18

Installing the Freshwater Tank

Parts needed for this procedure:

1	Freshwater tank
1	90° elbow (3/4 inch NPT)
1	90° spigot
1	Freshwater-tank mount
4	Mount strap
4	Flange-head bolt (5/16 x 5/8 inch)
10	Flange locknut (5/16 inch)
1	Support tube (freshwater tank)
1	Jam nut (5/16 inch)
1	Bolt (5/16 x 1 inch)
2	Shoulder bolt (1/2 x 1-15/16 inches)
2	Bolt (5/16 x 2-1/4 inches)
2	Washer (5/16 inch)

Assembling the Mount Bracket to the Freshwater Tank

1. Assemble the freshwater tank to the freshwater-tank mount with the 2 mount straps, 4 flange-head bolt (5/16 x 5/8 inch), and 4 flange locknuts (5/16 inch) as shown in Figure 43.

   Note: Ensure that the elbow and spigot are aligned to the same side of the tank as the freshwater-tank decal.

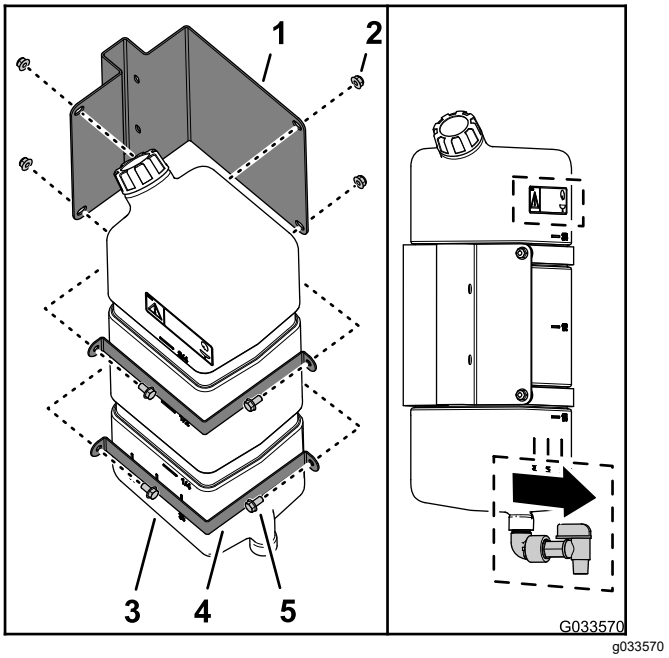

Figure 43

1. Freshwater-tank mount
2. Flange locknut (5/16 inch)
3. Freshwater tank
4. Mount strap
5. Flange-head bolt (5/16 x 5/8 inch)

2. Torque the bolts and nuts to 20 to 25 N·m (175 to 225 in-lb).

Installing the Tank-Support Tube

1. Align the support tube for the freshwater tank with the tank-support channel (Figure 44).

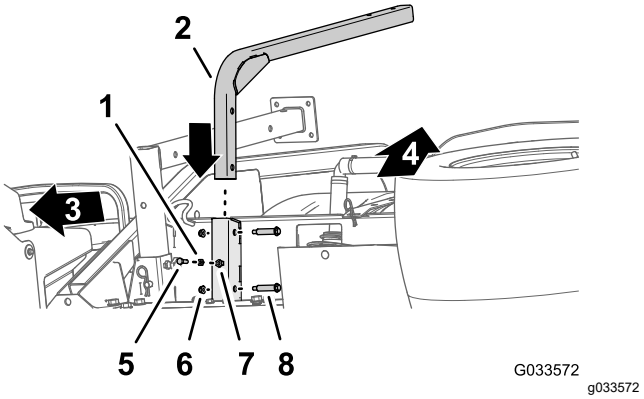

Figure 44

1. Jam nut (5/16 inch)
2. Support tube (freshwater tank)
3. Front of the machine
4. Top of the machine
5. Bolt (5/16 x 1 inch)
6. Flange locknut (5/16 inch)
7. Weld nut (support channel—freshwater tank)
8. Shoulder bolt (1/2 x 1-15/16 inches)

2. Align the holes in the support tube with the holes in the channel (Figure 44).
3. Secure the tube to the channel (Figure 44) with the 2 shoulder bolts (1/2 x 1-15/16 inches) and 2 flange locknuts (5/16 inch).
4. Torque the bolts and nuts to 20 to 25 N·m (175 to 225 in-lb).
5. Thread the jam nut (5/16 inch) into the bolt (5/16 x 1 inch) as shown in Figure 44.
6. Thread the bolt (5/16 x 1 inch) and jam nut into the weld nut at the bottom of the tank support channel and tighten the bolt and jam nut by hand (Figure 44).

Installing the Tank

Note: The Multi-Pro WM turf sprayer requires a 4-post ROPS or cab installed onto the Workman vehicle.

1. Assemble the freshwater tank and mount onto the support tube with the 2 bolts (5/16 x 2-1/4 inches) and 2 flange locknuts (5/16 inch) as shown in Figure 45.

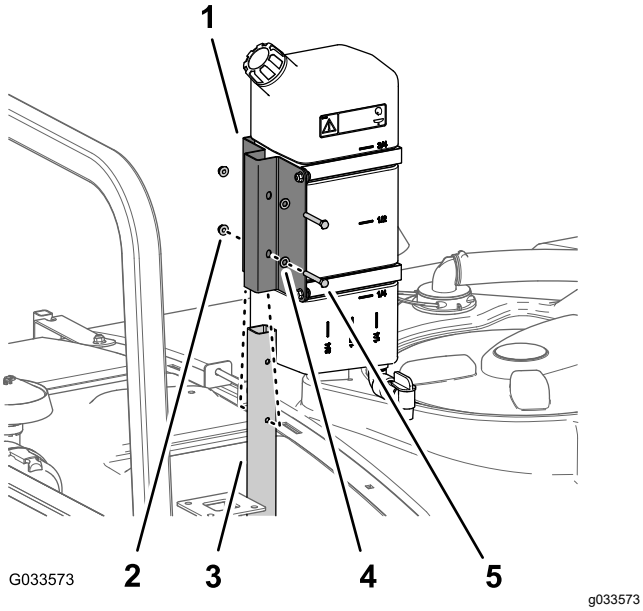

Figure 45

1. Freshwater tank mount
2. Flange locknut (5/16 inch)
3. Support tube (freshwater tank)
4. Washer (5/16 inch)
5. Bolt (5/16 x 2-1/4 inches)

2. Torque the bolts and nuts to 20 to 25 N·m (175 to 225 in-lb).

19

Installing the Anti-Siphon Fill Receptacle

Parts needed for this procedure:

1	Fill receptacle assembly
1	Flange-head bolt (5/16 x 3/4 inch)

Procedure

Place the fill-receptacle assembly over the threaded hole in the tank (Figure 46) and secure it with a flange-head bolt (5/16 x 3/4 inch).

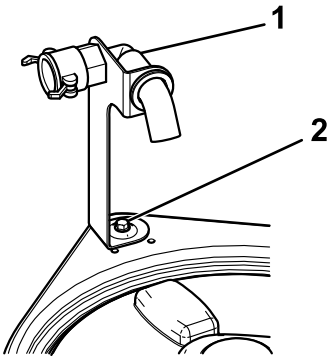

Figure 46

1. Fill-receptacle assembly
2. Flange bolt (5/16 x 3/4 inch)

20

Storing the Jack Stands

Parts needed for this procedure:

2	Front jack stand
2	Rear jack stand
4	Cotter pin
2	Clevis pin (4-1/2 inches)
2	Clevis pin (3 inches)
2	Knob

Procedure

1. Insert the front jack stands upside down into the frame near the front tie-down points (Figure 47).

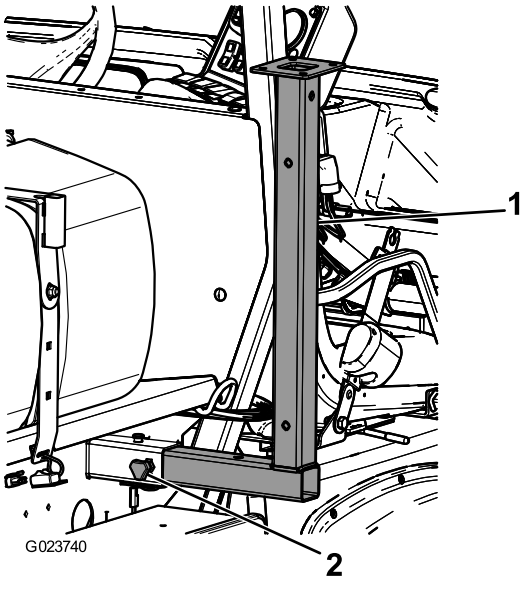

Figure 47

1. Front jack stand
2. Knob

2. Secure the front jack stands with 2 clevis pins (3 inches) and 2 cotter pins through the middle hole on the stands.
3. Insert the rear jack stands from the bottom, up into the frame, near the rear tie-down points (Figure 48).

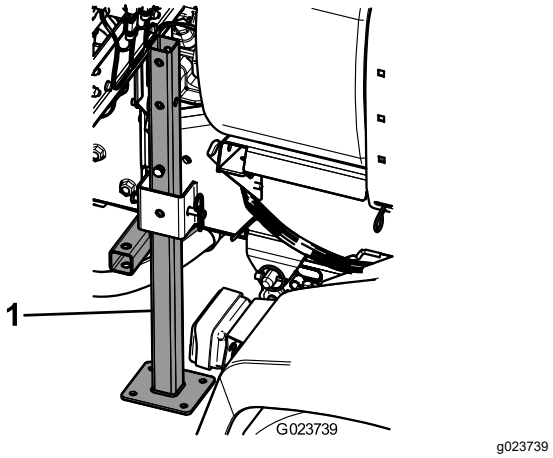

Figure 48

1. Rear jack stand

4. Secure the rear jack stands with 4 clevis pins (4-1/2 inches) and 4 cotter pins through the last hole on the stands.

Product Overview

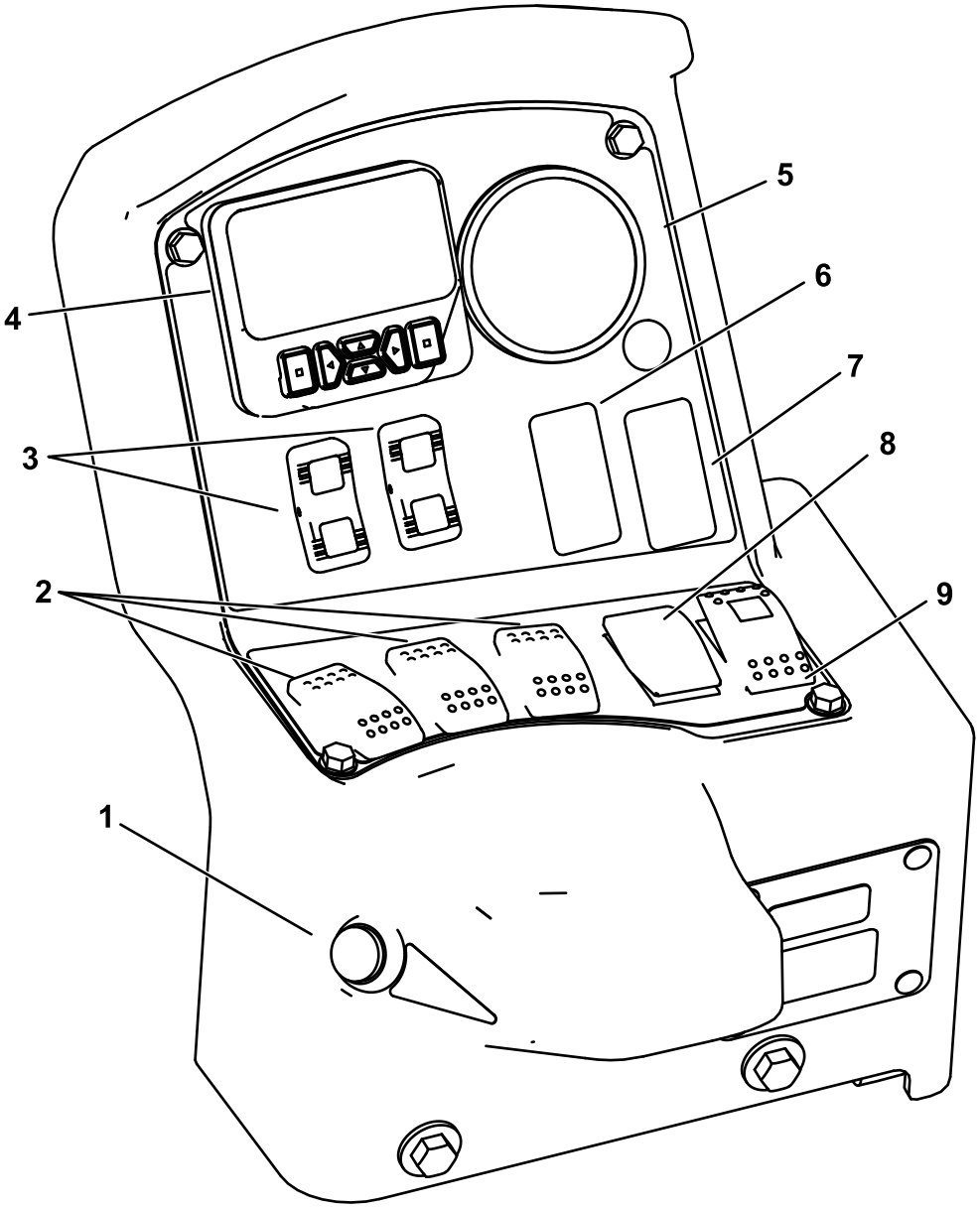

g516736

Figure 49

1. Master section switch
2. Left, center, and right section switches
3. Boom-section lift switches
4. InfoCenter
5. Pressure gauge
6. Rinse switch (optional)
7. Sonic-boom switch (optional)
8. Application-rate switch
9. Agitation switch

Controls

InfoCenter LCD Display

Note: This 6-button InfoCenter is available for the HDX manual Workman only. If you have a Workman HDX-Auto machine, please continue to use the 3-button InfoCenter.

The InfoCenter LCD display shows information about your machine and battery pack such as the current battery charge, the speed, diagnostics information, and more. For more information, refer to Using the InfoCenter (page 39).

Master Section Switch

The master section switch (Figure 49) is located on the side of the console and to the right of the operator's seat. It allows you to start or stop the spray operation. Press the switch to enable or disable the spray system.

Left, Center, and Right Section Switches

The left, center, and right section switches are located on the control panel (Figure 49). Toggle each switch forward to turn the corresponding section on and rearward to turn them off. When the switch is turned on, a light on the switch illuminates. These switches affect the spray system only when the master section switch is on.

Application-Rate Switch

The application-rate switch is located on the left side of the control panel (Figure 49). Press and hold the switch upward to increase the spray system application rate, or press and hold it downward to decrease application rate.

Boom-Section Lift Switches

The boom-section lift switches are located on the control panel and are used to raise the outer boom sections.

Regulating (Rate Control) Valve

The regulating valve located behind the tank (Figure 50), The regulating valve controls the amount of fluid that is routed to the section valves or the rate return to the tank.

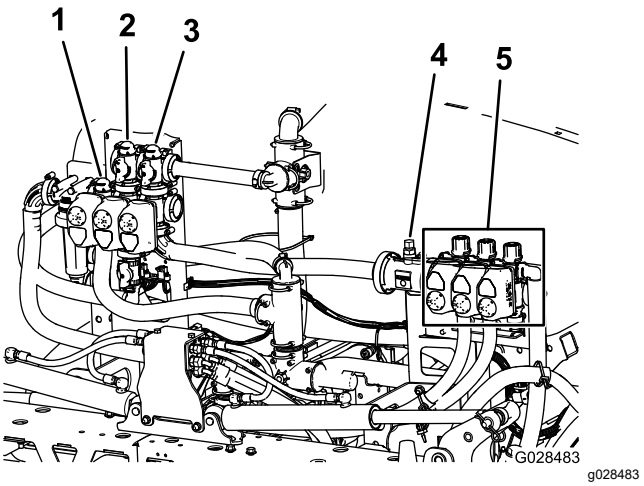

Figure 50

1. Regulating (rate control) valve
2. Agitation valve
3. Master-boom valve
4. Flow meter
5. Section valves

Flow meter

The flow meter measures the flow rate of the fluid to the boom section valves (Figure 50).

Section Valves

Use the boom-section valves to turn the sprayer pressure on or off to the sprayer nozzles in the left, center, and right boom sections (Figure 50).

Section-Bypass Valves

The boom section-bypass valves (Figure 51) redirect the fluid flow from a boom to the tank when you turn off the boom section. You can adjust these valves to ensure that the boom pressure remains constant no matter which combination of booms you are operating; refer to Calibrating the Section-Bypass Valves (page 52).

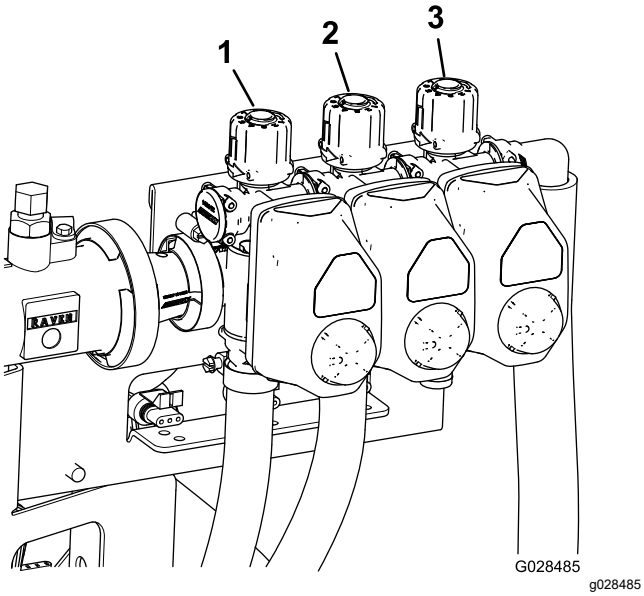

Figure 51

1. Left boom section-bypass valve
2. Center boom section-bypass valve
3. Right boom section-bypass valve

Agitation-Throttle Valve

This valve is located on the rear left side of the tank (Figure 52). Turn the knob on the valve to the 6 o'clock position to turn on the tank agitation and to the 8 o'clock position to turn off the tank agitation.

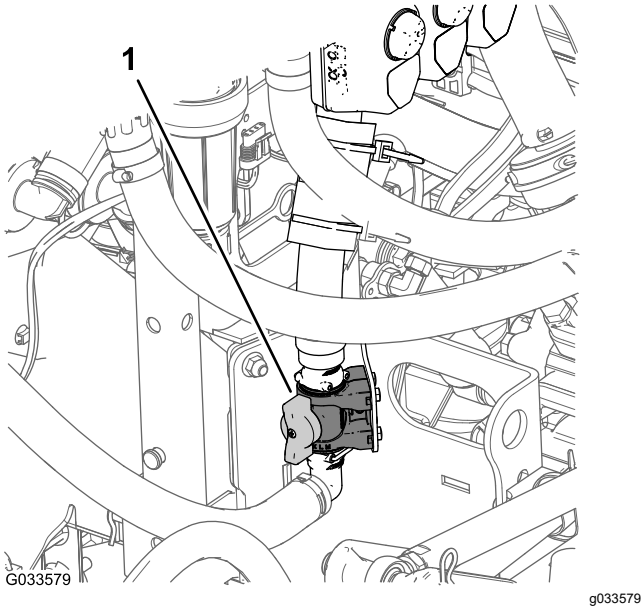

Figure 52

1. Agitation-control valve

Note: HD-series models with a manual transmission—for agitation to work the PTO and clutch must be engaged and the engine must be running above an idle. If you stop the sprayer and need agitation circulating the content of the tank, place the range shift lever in the NEUTRAL position, let out the clutch, engage the parking brake, and set the hand throttle (if equipped).

Sprayer Pump

The sprayer pump is located at the rear of the machine.

At the center console of the machine, move the PTO lever to the ENGAGE position to run the pump; move the PTO lever to the DISENGAGE position to stop the pump. Refer to the Workman HDX Utility Vehicle *Operator's Manual*.

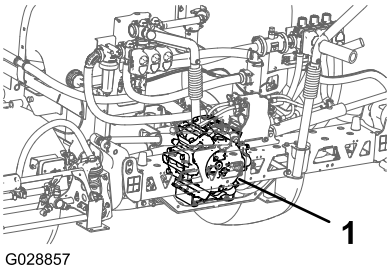

Figure 53

1. Sprayer pump

Specifications

Note: Specifications and design are subject to change without notice.

Spray system base weight (vehicle weight not included)	424 kg (935 lb)
Tank capacity	757 L (200 US gallons)
Overall vehicle length with the standard spray system	422 cm (166 inches)
Overall vehicle height with standard spray system to the top of the tank	147 cm (58 inches)
Overall vehicle height with standard spray system and the booms stored in the X pattern	234 cm (92 inches)
Overall vehicle width with the standard spray system and the booms stored in the X pattern	175 cm (69 inches)

Attachments/Accessories

A selection of Toro approved attachments and accessories is available for use with the machine to enhance and expand its capabilities. Contact your Authorized Service Dealer or authorized Toro distributor or go to www.Toro.com for a list of all approved attachments and accessories.

To ensure optimum performance and continued safety certification of the machine, use only genuine Toro replacement parts and accessories.

Operation

Note: Determine the left and right sides of the machine from the normal operating position.

Note: If you need to transport the vehicle on a trailer with the sprayer installed, make sure that the booms are tied down and secure.

Before Operation

Before Operation Safety

General Safety

- Never allow children or untrained people to operate or service the machine. Local regulations may restrict the age of the operator. The owner is responsible for training all operators and mechanics.
- Become familiar with the safe operation of the equipment, operator controls, and safety signs.
- Before you leave the operator's position, do the following:
  - Park the machine on a level surface.
  - Shift the transmission into the NEUTRAL position.
  - Engage the parking brake.
  - Shut off the engine and remove the key (if equipped).
  - Wait for all movement to stop.
- Know how to stop the machine and shut off the engine quickly.
- Check that operator-presence controls, safety switches, and guards are attached and functioning properly. Do not operate the machine unless they are functioning properly.
- If the machine does not function correctly or is damaged in any way, do not use the machine. Correct the problem before you operate the machine or attachment.
- Ensure that all fluid line connectors are tight and that all hoses are in good condition before applying pressure to the system.

Chemical Safety

Chemical substances used in the sprayer system may be hazardous and toxic to you, bystanders, and animals, and they may damage plants, soil, and other property.

- Read the information on each chemical. Refuse to operate or work on the sprayer if this information is not available.
- Before working on a sprayer system, ensure that it has been neutralized and triple rinsed according to the recommendations of the chemical manufacturer(s) and that all the valves have been cycled 3 times.
- Verify that there is an adequate supply of clean water and soap nearby, and immediately wash off any chemicals that contact you.
- Carefully read and follow the chemical warning labels and safety data sheets (SDSs) for all chemicals used, and protect yourself according to the chemical manufacturer's recommendations.
- Always protect your body while using chemicals. Use the appropriate personal protective equipment (PPE) to guard against contact with chemicals, such as the following:
  - safety glasses, goggles, and/or face shield
  - a chemical suit
  - a respirator or filter mask
  - chemical-resistant gloves
  - rubber boots or other substantial footwear
  - a clean change of clothes, soap, and disposable towels for cleanup
- Obtain proper training before using or handling chemicals.
- Use the correct chemical for the job.
- Follow the chemical manufacturer's instructions for the safely applying the chemical. Do not exceed the recommended system application pressure.
- Do not fill, calibrate, or clean the machine while people, especially children, or pets are in the area.
- Handle chemicals in a well-ventilated area.
- Do not eat, drink, or smoke while working near chemicals.
- Do not clean spray nozzles by blowing through them or placing them in your mouth.
- Always wash your hands and other exposed areas as soon as possible after working with chemicals.
- Keep chemicals in their original packages and stored in a safe location.
- Properly dispose of unused chemicals and chemical containers as instructed by the chemical manufacturer and your local codes.
- Chemicals and fumes are dangerous; never enter the tank or place your head over or in the opening of a tank.
- Follow all local, state, and federal regulations for spreading or spraying chemicals.

Using the InfoCenter

Note: This 6-button InfoCenter is available for the HDX manual Workman only. If you have a Workman HDX-Auto machine, please continue to use the 3-button InfoCenter.

The InfoCenter LCD display shows information about your machine, such as the operating status, various diagnostics, and other information about the machine. There is a splash screen and main information screen on the InfoCenter. You can switch between the splash screen and main information screen, at any time, by pressing any of the InfoCenter buttons and then selecting the appropriate directional arrow.

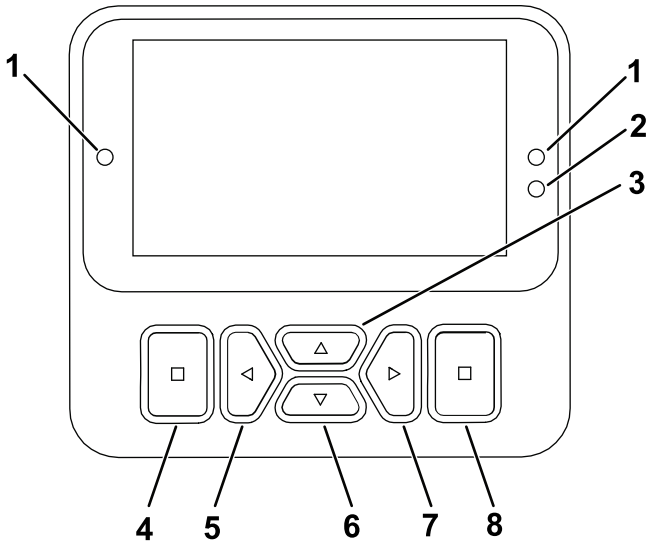

g471371

Figure 54

1. Indicator light
2. Display brightness sensor
3. Navigation button—up
4. Back button
5. Navigation button—decrease/left
6. Navigation button—down
7. Navigation button—increase/right
8. Enter button

Note: The purpose of each button may change depending on what function is active at the time. The LCD display shows an icon above each button that indicates its current function.

InfoCenter Icons

	Menu
	Scroll up/down
	Scroll left/right
	Previous screen
	Decrease value
	Increase value
	Accept
	Save
PIN	PIN passcode
	Exit (faults) menu
	Battery voltage
	Hour Meter
	Locked

	Tank is empty (less than 10% volume)
	Tank volume is low (10% to 29%)
	Tank volume is half full (30% to 69%)
	Tank volume is full (70% to 100%)
±1	Increase the tank volume by 1 gallon
±10	Increase the tank volume by 10 gallons
±25	Increase the tank volume by 25 Liters
	Boom is off
	Boom is active
	Clear all areas
	Clear active area
	Areas sprayed
	All areas screen
	Navigate to a sprayer area
	Navigate to a sprayer area

Overview of the Menus

To access the InfoCenter display menu system, press the back button while at the main screen. This brings you to the main menu. Refer to the following tables for a synopsis of the options available from the menus.

🔒 Protected under Protected Menus—accessible only by entering PIN

Main Menu

Menu Item	Description
Calibration	The Calibration menu assists in calibration of the flow meter and speed sensor.
Settings	The Settings menu allows you to customize and modify the display configuration variables.
Machine Settings	The Machine Settings menu allows you to configure machine variables.
Service	The Service menu contains information on the machine such as hours of use and machine faults.
Diagnostics	The Diagnostics menu displays the state of each machine switch, sensor, and control output. You can use this to troubleshoot certain issues as it quickly tells you which machine controls are on and which are off.
About	The About menu lists the model number, serial number, and software version of your machine.

Calibration

Menu Item	Description
Test Speed	Sets the test speed for calibration.
Flow Cal	Calibrates the flow meter.
Speed Cal	Calibrates the speed sensor.
Use default flow calibration	Resets the flow calibration to the default calculated average, not the actual volume.
Use default speed calibration	Resets the speed calibration to the default calculated average, not the actual speed.

Settings

Menu Item	Description
Edit PIN	Allows a person (superintendent/mechanic) authorized by your company with the PIN code to access protected menus.
Protect Settings 🔒	Allows the ability to change the settings in the protected settings.
Reset Defaults 🔒	Resets the default values.
Backlight	Controls the brightness of the LCD display.
Language	Controls the language used on the display.
Units	Controls the units used on the display (Imperial, Turf, or Metric).

Machine Settings

Menu Item	Description
Tank Alert	Sets the low tank volume alert.
Left Boom 🔒	Adjusts the width of the left section.
Center Boom 🔒	Adjusts the width of the center section.

Right Boom 🔒	Adjusts the width of the right section.
Reset Defaults 🔒	Resets the default values.

Service

Menu Item	Description
Faults	The Faults menu contains a list of the recent machine faults. Refer to the Service Manual or contact your authorized Toro distributor for more information on the Faults menu and the information contained there.
Hours	Lists the total number of hours that the machine, engine and PTO have been on, as well as the number of hours the machine has been transported and service due.
Flow Rate 🔒	Displays the current flow rate.
Flow Cal Value 🔒	Displays the current multiplier used to calculate the difference between the assumed flow and the calibrated flow.
Speed Cal Value 🔒	Displays the current multiplier used to calculate the difference between the assumed speed and the calibrated speed.

Diagnostics

Menu Item	Description
Pumps	Accesses the momentary rinse and time rinse options.
Booms	Accesses the boom inputs and outputs.
Engine Run	Accesses the engine run inputs and outputs.

About

Menu Item	Description
Model	Lists the model number of the machine.
SN	ists the serial number of the machine.
S/W Revision	Lists the software revision of the primary controller.
XDM–2700 🔒	Lists the software revision of the InfoCenter.
CAN Stats 🔒	Lists the CAN Bus.

Protected Menus

There are operating configuration settings that are adjustable within Settings of the display. To lock these settings, use the Protected Menu.

Note: At the time of delivery, the initial password code is programmed by your distributor.

Accessing Protected Menus

Note: The factory default PIN code for you machine is either 0000 or 1234.

If you changed the PIN code and forgot the code, contact your authorized Toro distributor for assistance.

1. From the Main Menu, scroll down to Settings and press the select button.

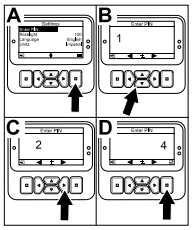

g510564

Figure 55

2. In Settings, scroll to Enter PIN and press the select button.
3. To enter the PIN code, press the up/down navigation buttons until the correct first digit appears, then press the right navigation button to move on to the next digit. Repeat this step until the last digit is entered.
4. Press the select button.

   Note: If the display accepts the PIN code and the protected menu is unlocked, the word “PIN” displays in the upper right corner of the screen.
5. To lock the protected menu, rotate the key switch to the OFF position and then to the ON position.

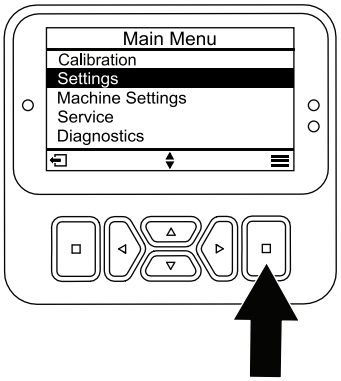

g517323

Figure 56

Viewing and Changing the Protected Menu Settings

1. In Settings, scroll down to Protect Settings.
2. To view and change the settings without entering a PIN code, use the select button to change the Protect Settings to Off.
3. To view and change the settings with a PIN code, use the select button to change the Protect Settings to On, set the PIN code, and turn the key in the ignition switch to the OFF position and then to the ON position.

Setting the Spray Tank Alert

1. Select Machine Settings.
2. Select Tank Alert.

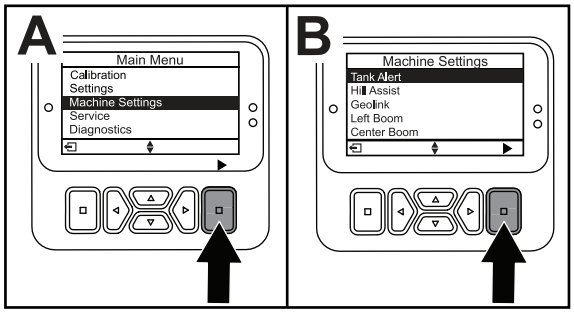

g517324

Figure 57

3. Use the directional buttons to enter the minimum quantity in the tank when the alert displays during sprayer operation.

Setting the Boom Sizes

1. Select Machine Settings.
2. Select the boom you would like to update.
3. Use the directional buttons to change the boom size in increments of 1 inch (2.5 cm).

Resetting the Default Settings

Setting	Default Value
Test Speed	0.0
Spray Tank Alert	1 gal/ltr
L Boom	80 in
C Boom	60 in
R Boom	80 in

1. Select Machine Settings and select Reset Defaults.

Entering the Spray Tank Volume

Note: Changing the volume will reset the tank alert.

1. Press the ENTER button to navigate to the right. The display will show the current tank volume.
2. Press the button to increase or decrease the tank volume.
   A. Press the up/down directional buttons to jump to ±10 (for US units) or ±25 (for metric units).
   B. Press the left/right directional buttons to change the volume by 1 increment.

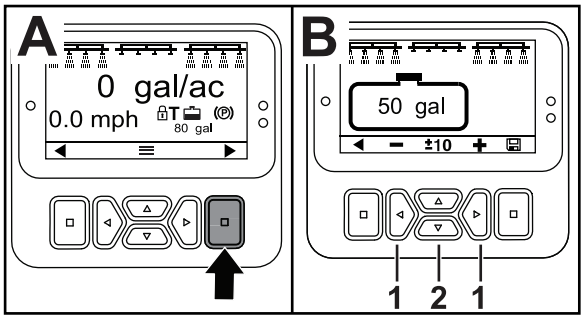

g517327

Figure 58

The Total and Sub Area Screens

These screens display:

- Area sprayed (acres, hectares, or 1000 ft^2)
- Volume sprayed (US gallon or liters)

The area and volume information accumulates until you reset it. Use an individual sub area for each sprayer task at your site. You can use up to 20 sub areas.

Note: Ensure that you navigate to the sub area you are working on before you begin spraying. The sub area shown on the screen is the active sub area for coverage accumulation.

Resetting the Total Area and Volume Data

1. Press the BACK button to navigate to the Total Area screen.
2. Press the RIGHT button to reset the Total Area data.

   Note: Resetting the total area and total volume information at the total area screen resets **all** of the data for every sub area.

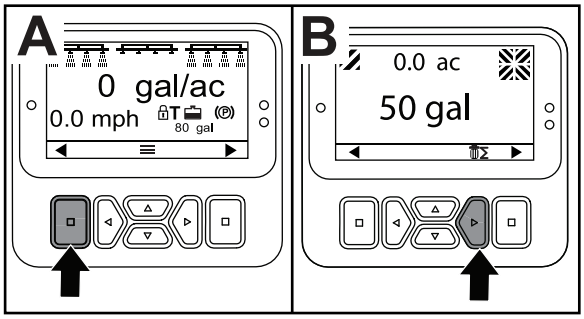

g517325

Figure 59

Resetting a Sub Area and Volume Data

1. Press the BACK button to navigate to a Sub Area screen.
2. Press the UP button to reset the sub area data.

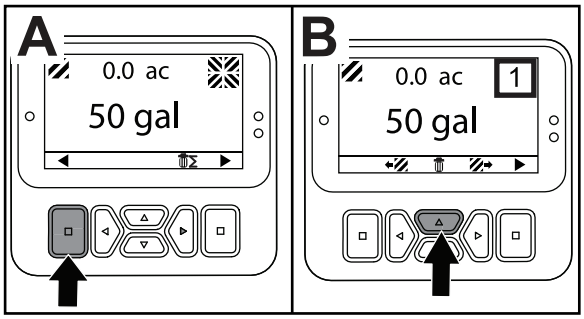

g517326

Figure 60

InfoCenter Advisories

Operator advisories automatically display on the InfoCenter screen when a machine function requires additional action. For example, if you attempt to start the engine while pressing the traction pedal, an advisory displays indicating that the traction pedal must be in the NEUTRAL position.

Press any button on the display to clear the advisory.

Advisories

Advisory Code	Description
200	Start prevented—pump switch active
201	Start prevented—not in NEUTRAL
202	Start prevented—out of seat
203	Start prevented—throttle pedal is not home
204	Start prevented—starter engage timeout
205	Parking brake is engaged
206	Pump start prevented—boom active
207	Pump start prevented—engine speed high
208	Throttle/speed lock prevented—pump is not active
209	Throttle lock prevented—parking brake is not engaged
210	Speed lock prevented—operator not in seat or parking brake is engaged
211	Throttle/speed lock prevented—clutch or service brake is engaged
212	Tank low volume alert
213	Rinse pump ON
220	Flow sensor calibration
221	Flow sensor calibration—fill water in tank and enter volume filled
222	Flow sensor calibration—turn on the pump
223	Flow sensor calibration—turn on all the booms
224	Flow sensor calibration—calibration commenced
225	Flow sensor calibration—calibration complete
226	Flow sensor calibration—exiting calibration mode
231	Speed sensor calibration
232	Speed sensor calibration—fill the fresh-water tank, press next
233	Speed sensor calibration—fill the sprayer half full of water, press next
234	Speed sensor calibration—enter the calibration distance, press next
235	Speed sensor calibration—mark and drive the entered distance with sprayer sections off
236	Speed sensor calibration—speed sensor calibration in progress
237	Speed sensor calibration—speed sensor calibration complete
238	Speed sensor calibration—turn off the booms
241	Calibration out of bounds, using default

Performing Pre-Starting Checks

Check the following items each time you begin use of the sprayer for the day:

- Check the air pressure in the tires.

  Note: The tires of this machine are different than car tires; they require less air pressure to minimize turf compaction and damage.
- Check all fluid levels and add the appropriate amount of specified fluids, if any are found to be low.
- Check the brake pedal operation.
- Check to see that the lights are working.
- Turn the steering wheel to the left and right to check steering response.
- With the engine shut off, check for oil leaks, loose parts, and any other noticeable malfunctions.

If any of the above items are not correct, notify your mechanic or check with your supervisor before taking the sprayer out for the day. Your supervisor may want you to check other items daily, so ask what inspections you are responsible to perform.

Preparing the Sprayer

Selecting a Nozzle

Note: Refer to the nozzle-selection guide that is available through your authorized Toro distributor.

The turret bodies accepts up to 3 different nozzles.

1. Stop the sprayer on a level surface, shut off the engine, engage the parking brake, and remove the key.
2. Set the master section switch to the OFF position and set the spray-pump switch to the OFF position.
3. Rotate the turret of the nozzles in either direction to the correct nozzle.
4. Perform a flow calibration; refer to Calibrating the Sprayer Flow (page 51).

Selecting a Suction Filter

Standard Equipment: 50 mesh suction filter (blue)

Use the suction filter table to identify the screen mesh for the spray nozzles you are using based on chemicals products or solutions with a viscosity equivalent to water.

Suction Filter Table

Spray Nozzle Color Code (flow rate)	Screen Mesh Size*	Filter Color Code
Yellow (0.2 gpm)	50	Blue
Red (0.4 gpm)	50	Blue
Brown (0.5 gpm)	50 (or 30)	Blue (or green)
Gray (0.6 gpm)	30	Green
White (0.8 gpm)	30	Green
Blue (1.0 gpm)	30	Green
Green (1.5 gpm)	30	Green
*The mesh size of the suction filters in this table are based on spray chemicals or solutions with the viscosity equivalent to water.		

Important: **When you spray with higher viscosity (thicker) chemical products or solutions with wettable powders, you may need to use a coarser screen mesh for the optional suction filter; refer to Figure 61.**

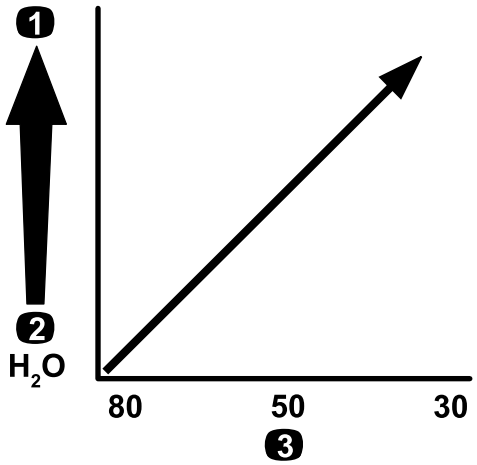

g214212

Figure 61

Mesh size—chemical or solution viscosity

1. Higher-viscosity chemicals or solutions
2. Lower-viscosity chemicals or solutions
3. Screen mesh size

When you spray at a higher application rate, consider using a coarser optional suction-filter mesh; refer to Figure 62.

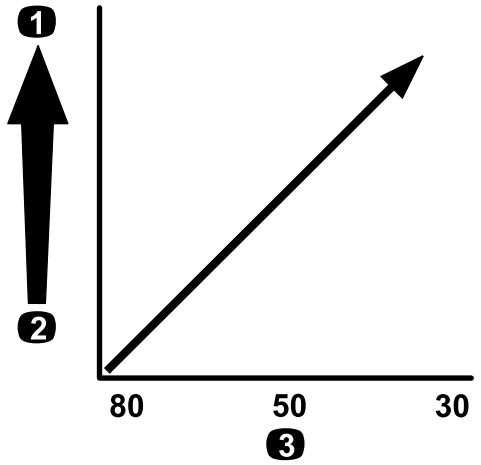

g214214

Figure 62

Mesh size—application rate

1. Higher application rate
2. Lower application rate
3. Screen mesh size

Selecting a Pressure Filter

Available screen sizes include:

Standard Equipment: 50 mesh suction filter (blue)

Use the pressure filter table to identify the screen mesh for the spray nozzles you are using based on chemicals products or solutions with a viscosity equivalent to water.

Pressure Filter Table

Spray Nozzle Color Code (flow rate)	Screen Mesh Size*	Filter Color Code
As required for low viscosity chemicals or solutions or low application rates	100	Green
Yellow (0.2 gpm)	80	Yellow
Red (0.4 gpm)	50	Blue
Brown (0.5 gpm)	50	Blue
Gray (0.6 gpm)	50	Blue
White (0.8 gpm)	50	Blue
Blue (1.0 gpm)	50	Blue
Green (1.5 gpm)	50	Blue
As required for high viscosity chemicals or solutions or high application rates	30	Red

Pressure Filter Table (cont'd.)

Spray Nozzle Color Code (flow rate)	Screen Mesh Size*	Filter Color Code
As required for high viscosity chemicals or solutions or high application rates	16	Brown
*The mesh size of the pressure filters in this table are based on spray chemicals or solutions with the viscosity equivalent to water.		

Important: **When you spray with higher viscosity (thicker) chemical products or solutions with wettable powders, you may need to use a coarser screen mesh for the optional pressure-filter; refer to Figure 63.**

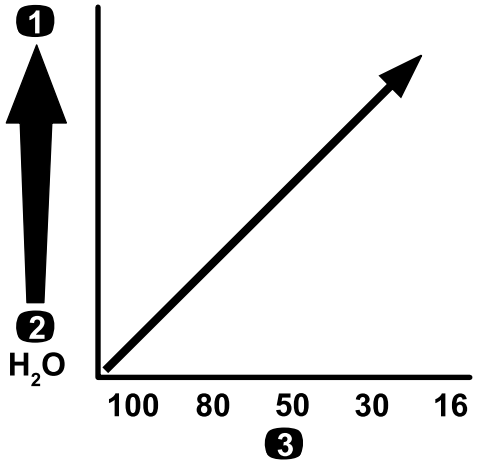

g214211

Figure 63

Mesh size—chemical or solution viscosity

1. Higher-viscosity chemicals or solutions
2. Lower-viscosity chemicals or solutions
3. Screen mesh size

When you spray at a higher application rate, consider using a coarser optional pressure-filter mesh; refer to Figure 64.

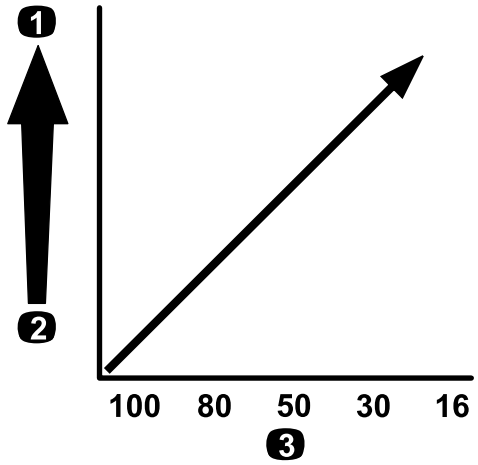

g214240

Figure 64

Mesh size—application rate

1. Higher application rate
2. Lower application rate
3. Screen mesh size

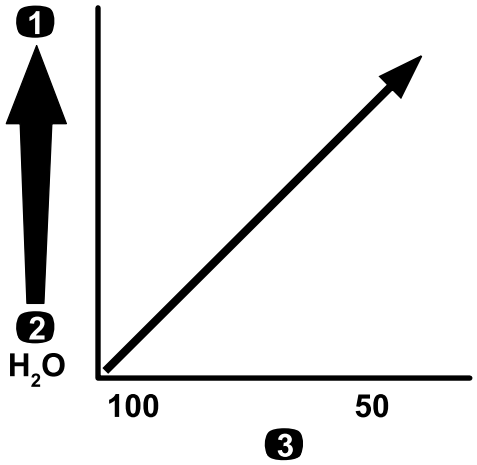

g214246

Figure 65

Mesh size—chemical or solution viscosity

1. Higher-viscosity chemicals or solutions
2. Lower-viscosity chemicals or solutions
3. Screen mesh size

Selecting a Nozzle-Tip Filter (Optional)

Note: The use the optional nozzle-tip filter to protect the spray-nozzle tip and increase its service life.

Use the nozzle-tip filter table to identify the screen mesh for the spray nozzles you are using based on chemicals products or solutions with a viscosity equivalent to water.

Nozzle-Tip Filter Table

Spray Nozzle Color Code (flow rate)	Filter Mesh Size*	Filter Color Code
Yellow (0.2 gpm)	100	Green
Red (0.4 gpm)	50	Blue
Brown (0.5 gpm)	50	Blue
Gray (0.6 gpm)	50	Blue
White (0.8 gpm)	50	Blue
Blue (1.0 gpm)	50	Blue
Green (1.5 gpm)	50	Blue
*The mesh size of the nozzle filters in this table are based on spray chemicals or solutions with the viscosity equivalent to water.		

Important: **When you spray with higher viscosity (thicker) chemical products or solutions with wettable powders, you may need to use a coarser screen mesh for the optional tip-filter; refer to Figure 65.**

When you spray at a higher application rate, consider using a coarser tip-filter mesh; refer to Figure 66.

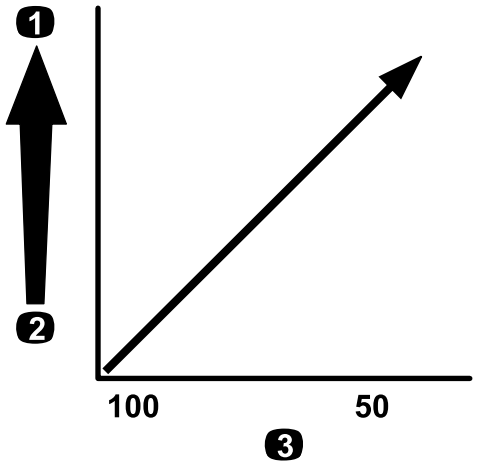

g214245

Figure 66

Mesh size—application rate

1. Higher application rate
2. Lower application rate
3. Screen mesh size

Filling the Tanks

Filling the Freshwater Tank

Important: **Do not use reclaimed water (gray water) in the freshwater tank.**

Note: The freshwater tank is used to supply a source of fresh water for you to wash chemicals off your skin, eyes, or other surfaces in the case of accidental exposure.

Always fill the freshwater tank with clean water before handling or mixing any chemicals.

The freshwater tank is located on the ROPS, behind the passenger seat (Figure 67). It supplies a source of fresh water for you to wash chemicals from your skin, eyes, or other surfaces in case of accidental exposure.

- To fill the tank, unscrew the cap on the top of the tank and fill the tank with fresh water. Replace the cap.
- To open the freshwater tank spigot, turn the lever on the spigot.

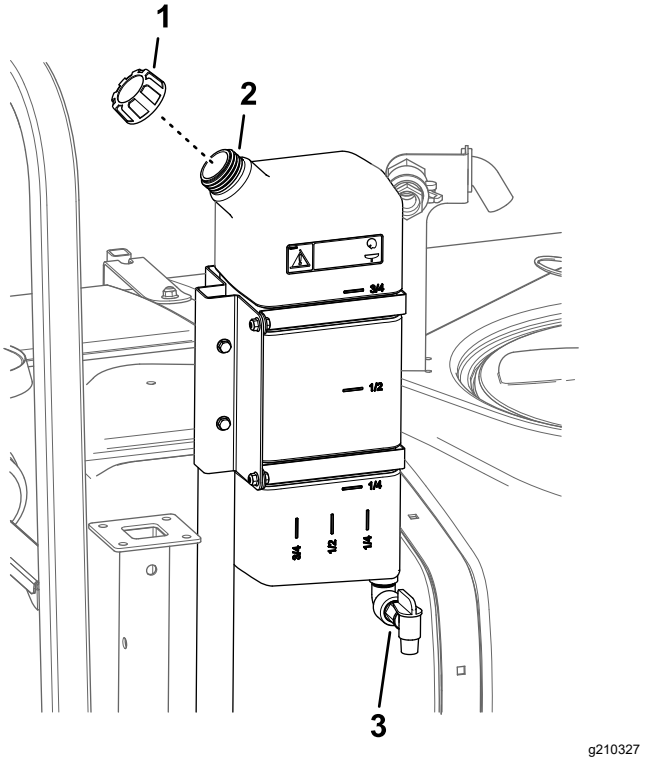

Figure 67

1. Filler cap
2. Freshwater tank
3. Spigot

Filling the Spray Tank

Install the Chemical Pre-Mix Kit for optimal mixing and exterior tank cleanliness.

Important: **Whenever possible, do not use reclaimed water (gray water) in the spray tank.**

Important: **Ensure that the chemicals you use are compatible for use with Viton™ (see the manufacturer's label; it should indicate if it is not compatible). Using a chemical that is not compatible with Viton™ degrades the O-rings in the sprayer, causing leaks.**

Important: **After filling the tank for the first time, check the tank straps for any play. Tighten them as necessary.**

1. Purge the spray system of spray-system conditioner by running the sections.
2. Park the machine on a level surface, move the range selector to the neutral position, engage the parking brake, shut off the engine, and remove the key.
3. Ensure that the tank drain valve is closed.
4. Determine the amount of water needed to mix the amount of chemical you need as prescribed by the chemical manufacturer.
5. Open the tank cover on the spray tank.

   Note: The tank lid is located at the center of the top of the tank. To open it, turn the front half of the cover counterclockwise and swing it open. You can remove the strainer inside for cleaning. To seal the tank, close the cover and rotate the front half clockwise.
6. Add 3/4 of the required water to the spray tank using the anti-siphon fill receptacle.

   Important: **Always use fresh, clean water in the spray tank. Do not pour concentrate into an empty tank.**

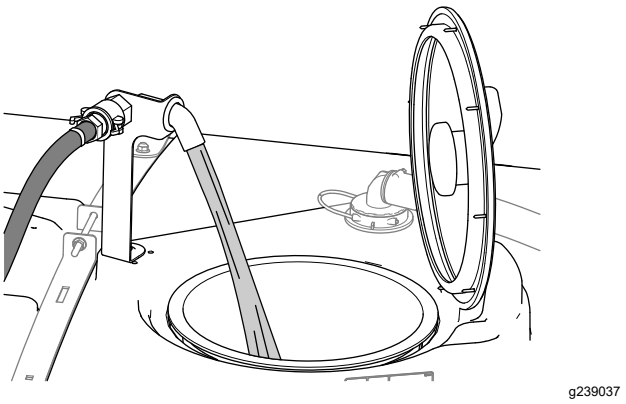

Figure 68

7. Start the engine, engage the PTO, and set the hand throttle if equipped.
8. Turn the agitation switch ON position.
9. Add the proper amount of chemical concentrate to the tank, as directed by the chemical manufacturer.

Important: **If you are using a wettable powder, mix the powder with a small amount of water to form a slurry before adding it to the tank**

10. Add the remaining water to the tank.

    Note: For better agitation, decrease the application rate setting.

Inspecting the Tank Straps

Service Interval: Before each use or daily—Check the tank straps.

Important: **Overtightening the tank strap fasteners can result in deforming and damaging the tank and straps.**

1. Fill the main tank with water.
2. Check to see if there is any movement between the tank straps and the tank (Figure 69).

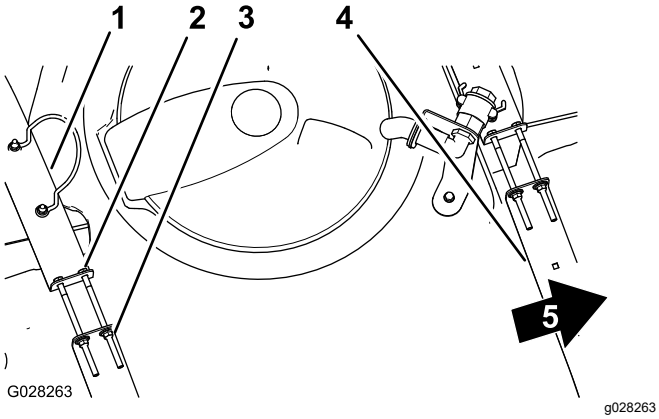

Figure 69

1. Rear tank strap
2. Bolt
3. Flanged locknut
4. Forward tank strap
5. Front of the machine

3. If the tank straps fit loose to the tank, tighten the flanged locknuts and bolts at the top of straps until the straps are flush with the surface of the tank (Figure 69).

   Note: Do not overtighten the tank strap hardware.

Calibrating the Sprayer

Preparing the Machine

Note: Before using the sprayer for the first time, if you change the nozzles, or as needed, calibrate the sprayer flow, speed, and section bypass.

1. Fill the spray tank with clean water.

   Note: Ensure that there is enough water in the tank to complete each of the calibration procedures.
2. Lower the left and right boom sections.
3. Set the protected settings to off; refer to Using the InfoCenter (page 39).

Calibrating the Sprayer Flow

Operator supplied equipment: Stopwatch capable of measuring to ± 1/10 second and a container graduated in 50 ml (1 fl oz) increments.

Note: Calibrating the sprayer flow for **machines without a throttle lock** requires 2 people.

Preparing the Sprayer System

1. Shift the transmission to the NEUTRAL position.
2. Engage the parking brake and start the engine.
3. Turn on the sprayer pump and turn on the agitation.
4. Press down on the accelerator pedal until the engine reaches maximum speed.
5. Set the engine speed as follows:
   - For machines **without** the optional throttle lock—have 1 person press down on the accelerator pedal until the engine reaches maximum speed.

     Note: Have the other person collect samples from the sprayer nozzles.
   - For machines **with** the optional throttle lock, press down on the accelerator pedal until the engine reaches maximum speed and set the throttle lock; refer to operation instructions for your Workman hand throttle kit.

Performing a Catch Test

1. Set all 3 section switches and the master-section switch to the ON position.
2. Prepare to perform a catch test using the graduated container.
3. Start at 2.75 bar (40 psi) and use the application-rate switch to adjust the spray pressure so that a catch test yields the amounts listed in the table that follows.

   Note: Collect 3 samples at 15 seconds each and average the quantities of water collected.

Nozzle Color	Milliliters collected in 15 seconds	Ounces collected in 15 seconds
Yellow	189	6.4
Red	378	12.8
Brown	473	16.0

Nozzle Color	Milliliters collected in 15 seconds	Ounces collected in 15 seconds
Gray	567	19.2
White	757	25.6
Blue	946	32.0
Green	1,419	48.0

4. Once the catch test has yielded the amounts listed in the table above, set the supervisor rate-lockout switch to the LOCK position.
5. Turn the master-section switch to the OFF position.

Setting the InfoCenter

1. On the InfoCenter, navigate to the Calibration menu and select FLOW CAL as follows:

   Note: Selecting the Home Screen icon at any time cancels calibrations.

   A. Press the center selection button on the InfoCenter twice to access the menus.

   B. Enter the calibration menu by pressing the right selection button on the InfoCenter.

   C. Select FLOW CAL by highlighting FLOW CAL and press the right selection button on the InfoCenter.

   D. In the next screen, enter the known quantity of water that will be sprayed out of the sections for the calibration procedure; refer to the chart below.

   E. Press the right selection button on the InfoCenter.
2. Using the plus (+) and minus (-) symbols, enter the flow volume according to the table below.

Nozzle Color	Liters	US Gallons
Yellow	42	11
Red	83	22
Brown	106	28
Gray	125	33
White	167	44
Blue	208	55
Green	314	83

3. Turn on the master-section switch for 5 minutes.

   Note: As the machine sprays, the InfoCenter displays the quantity of fluid that it is counting.
4. After spraying for 5 minutes, select the checkmark by pressing the center button on the InfoCenter.

   Note: It is acceptable if the gallons displayed during the calibration process do not match the known quantity of water entered into the InfoCenter.
5. Shut off the master-section switch and select the checkmark by pressing the center button on the InfoCenter.

   Note: Calibration is now complete.

Calibrating the Sprayer Speed

1. Ensure that the sprayer tank is filled with water.
2. On an open, flat area, mark off a distance between 45 to 152 m (150 to 500 ft).

   Note: Mark off 152 m (500 ft) for more accurate results.
3. Start the engine and drive to the start of the marked-off distance.

   Note: Align the center of the front tires with the starting line for the most accurate measurement.
4. On the InfoCenter, navigate to the Calibration menu and select Speed Calibration.

   Note: Selecting the Home Screen icon at any time cancels the calibration.
5. Select the Next arrow (→) on the InfoCenter.
6. Using the plus (+) and minus (-) symbols, enter the marked-off distance into the InfoCenter.
7. Shift the machine into first gear and drive the marked distance in a straight line at full throttle.
8. Stop the machine at the marked-off distance and select the checkmark on the InfoCenter.

   Note: Slow down and roll to a stop to align the center of the front tires with the finish line, for the most accurate measurement.

   Note: Calibration is now complete.

Calibrating the Section-Bypass Valves

Before using the sprayer for the first time, whenever you change the nozzles, or as needed, calibrate the sprayer flow, speed, and set the section bypass.

Important: **Select an open flat area to perform this procedure.**

Note: Calibrating the section bypass for **machines without a throttle lock** requires 2 people.

Preparing the Machine

1. Ensure that the sprayer tank is filled with water.
2. Shift the transmission to the NEUTRAL position.

3. Engage the parking brake and turn the engine on.
4. Set the 3 section switches to the ON position, but leave the master-section switch in the OFF position.
5. Set the pump switch to the ON position, and turn on the agitation.
6. Set the engine speed as follows:
   - For machines **without** the optional throttle lock—have 1 person press down on the accelerator pedal until the engine reaches maximum engine speed.

     Note: Have the other person adjust the section-bypass valves.
   - For machines **with** the optional throttle lock, press down on the accelerator pedal until the engine reaches maximum engine speed and set the throttle lock; refer to operation instructions for your Workman hand throttle kit.
7. On the InfoCenter, navigate to the Calibration menu and select Test Speed.

   Note: Selecting the Home Screen icon at any time cancels calibration.
8. Using the plus (+) and minus (–) symbols, enter a test speed of 5.6 km/h (3.5 mph), then select the Home icon.

Adjusting the Section Bypass Valves

1. Using the application rate switch, adjust the application rate according to the table that follows.

Nozzle Application Rate Table

Nozzle Color	SI (Metric)	English	Turf
Yellow	159 L/ha	17 gpa	0.39 gpk
Red	319 L/ha	34 gpa	0.78 gpk
Brown	394 L/ha	42 gpa	0.96 gpk
Gray	478 L/ha	51 gpa	1.17 gpk
White	637 L/ha	68 gpa	1.56 gpk
Blue	796 L/ha	85 gpa	1.95 gpk
Green	1,190 L/ha	127 gpa	2.91 gpk

2. Turn off the left-section switch and adjust the left section-bypass valve (Figure 70) until the pressure reading is at the previously adjusted level (typically 2.75 bar or 40 psi).

   Note: The numbered indicators on the bypass valve are for reference only.

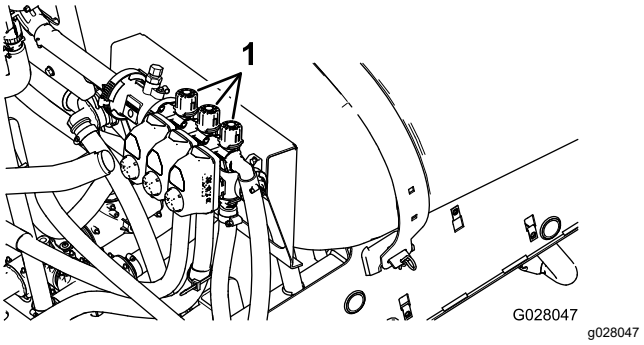

Figure 70

1. Section-bypass adjustment

3. Turn on the left-section switch and turn off the right-section switch.
4. Adjust the right section-bypass valve (Figure 70) until the pressure reading is at the previously adjusted level (typically 2.75 bar or 40 psi).
5. Turn on the right-section switch and turn off the center-section switch.
6. Adjust the center section-bypass valve (Figure 70) until the pressure reading is at the previously adjusted level (typically 2.75 bar or 40 psi).
7. Turn all the section switched off.
8. Turn the spray pump off.

   Note: Calibration is now complete.

Adjusting the Agitation and Master Bypass Valves

Agitation Bypass Valve Knob Positions

- The agitation bypass valve is in the fully Open position as shown in Figure 71A.
- The agitation bypass valve is in the Closed (0) position as shown in Figure 71B.
- The agitation bypass valve is in an intermediate (adjusted relative to the pressure gauge for the sprayer system) position as shown in Figure 71C.

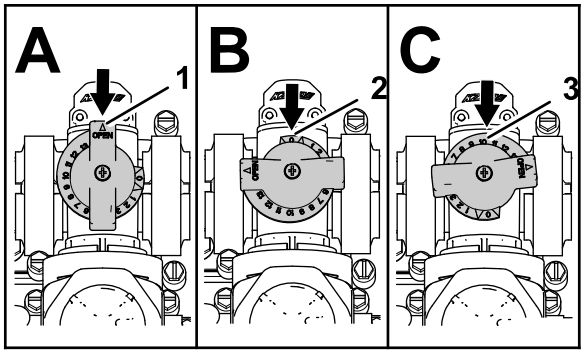

Figure 71

1. Open
2. Closed (0)
3. Intermediate position

Calibrating the Agitation Bypass Valve

Service Interval: Yearly

Important: **Select an open flat area to perform this procedure.**

Note: Calibrating the agitation bypass valve for **machines without a throttle lock** requires 2 people.

1. Ensure that the sprayer tank is filled with water.
2. Verify the agitation-control valve is open. If it has been adjusted, open it completely at this time.
3. Shift the transmission to the NEUTRAL position.
4. Engage the parking brake and turn the engine on.
5. Turn on the sprayer pump.
6. Set the engine speed as follows:
   - For machines **without** the optional throttle lock—have 1 person press down on the accelerator pedal until the engine reaches maximum speed.

     Note: Have the other person collect samples from the sprayer nozzles.
   - For machines **with** the optional throttle lock, press down on the accelerator pedal until the engine reaches maximum speed and set the throttle lock; refer to operation instructions for your Workman hand throttle kit.
7. Set the 3 individual section-valve switches to the OFF position.
8. Set the master-section switch to the ON position.
9. Set the system pressure to MAXIMUM.
10. Press the agitation switch to the OFF position and read the pressure gauge.
    - If the reading remains at 6.9 bar (100 psi) the agitation bypass valve is properly calibrated.
    - If the pressure gauge reads differently continue to the next step.
11. Adjust the agitation bypass valve (Figure 72) on the backside of the agitation valve until the pressure reading on the gauge is 6.9 bar (100 psi).

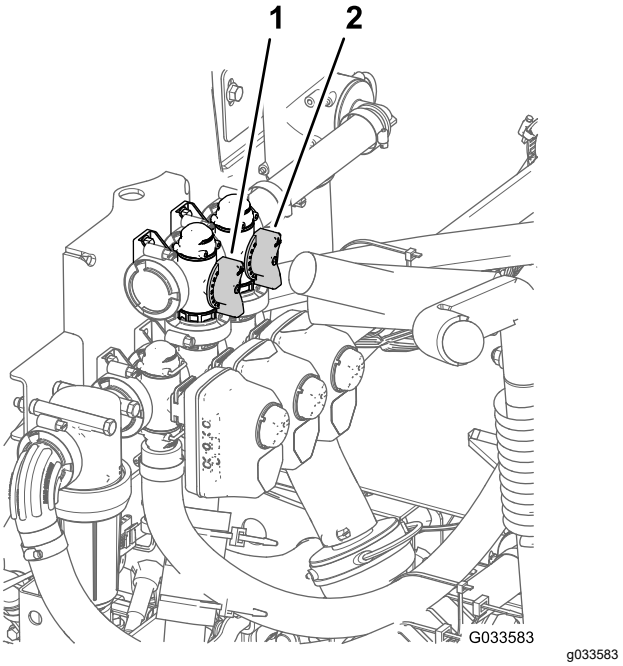

Figure 72

1. Agitation bypass valve
2. Master-section bypass

12. Press the pump switch to the OFF position, shift the throttle lever to the IDLE position, and turn the starter switch to the OFF position.

Adjusting the Master Section-Bypass Valve

Note: Adjusting the master section-bypass valve reduces or increases the amount of flow sent to the agitation nozzles in the tank when the master boom switch is set to the OFF position.

1. Ensure that the sprayer tank is filled with water.
2. Engage the parking brake.
3. Shift the transmission to the NEUTRAL position.
4. Turn on the sprayer pump.
5. Set the agitation switch to the ON position.
6. Set the master-section switch to the OFF position.
7. Set the engine speed as follows:

- For machines **without** the optional throttle lock—have 1 person press down on the accelerator pedal until the engine reaches maximum speed.

  Note: Have the other person collect samples from the sprayer nozzles.

- For machines **with** the optional throttle lock, press down on the accelerator pedal until the engine reaches maximum speed and set the throttle lock; refer to operation instructions for your Workman hand throttle kit.

8. Adjust the master section-bypass handle to control the amount of agitation occurring in the tank (Figure 72).
9. Reduce the throttle speed to idle.
10. Set the agitation switch and pump switch to the OFF position.
11. Shut off the engine.

Locating the Spray Pump

The spray pump is located at the back of the machine (Figure 73).

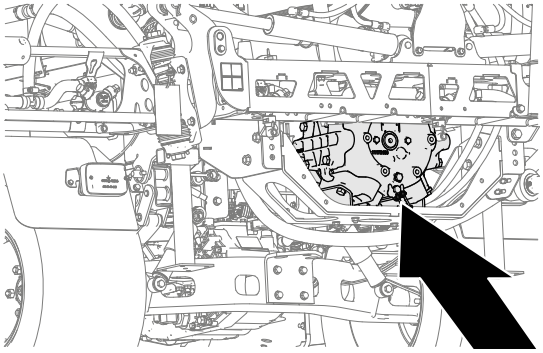

g239107

Figure 73

During Operation

During Operation Safety

General Safety

- The owner/operator can prevent and is responsible for accidents that may cause personal injury or property damage.
- Wear appropriate clothing, including eye protection; long pants; substantial, slip-resistant footwear; and hearing protection. Tie back long hair and do not wear loose clothing or loose jewelry.
- Wear appropriate personal protective equipment as directed in Chemical Safety.
- Use your full attention while operating the machine. Do not engage in any activity that causes distractions; otherwise, injury or property damage may occur.
- Do not operate the machine while ill, tired, or under the influence of alcohol or drugs.
- Do not carry more than 1 passenger on the machine; the passenger should sit in the designated seating position only.
- Operate the machine only in good visibility. Avoid holes or hidden hazards.
- Before you start the engine, ensure that you are in the operating position, the transmission is in the NEUTRAL position.
- Remain seated whenever the machine is in motion. Keep both hands on the steering wheel whenever possible, and always keep your arms and legs within the operator's compartment.
- Use care when approaching blind corners, shrubs, trees, or other objects that may obscure your vision.
- Before backing up, look rearward and ensure that no one is behind you. Back up slowly.
- Never spray while people, especially children, or pets are nearby.
- Do not operate the machine near drop-offs, ditches, or embankments. The machine could suddenly roll over if a wheel goes over the edge or if the edge gives way.
- Reduce the speed when operating on rough terrain, uneven ground, and near curbs, holes, and other sudden changes in terrain. Loads may shift, causing the machine to become unstable.
- Stop the machine, shut off the engine, remove the key, engage the parking brake, and inspect for damage after striking an object or if there is an abnormal vibration in the machine. Make all necessary repairs before resuming operation.

- Slow down and use caution when making turns and crossing roads and sidewalks with the machine. Always yield the right-of-way.
- Use extra caution when operating the machine on wet surfaces, in adverse weather conditions, at higher speeds, or with a full load. Stopping time and distance increase in these conditions.
- Do not touch the engine or muffler while the engine is running or soon after it has shut off. These areas may be hot enough to cause burns.
- Before you leave the operator's position, do the following:
  - Park the machine on a level surface.
  - Shift the transmission into the NEUTRAL position.
  - Shut off the spray pump.
  - Engage the parking brake.
  - Shut off the engine and remove the key (if equipped).
  - Wait for all movement to stop.
- Never run an engine in an area where exhaust gasses are enclosed.
- Do not operate the machine when there is the risk of lightning.
- Use accessories and attachments approved by Toro only.

Operating the Sprayer

To operate the Multi Pro WM, first fill the spray tank, then apply the solution to the work area, and finally clean the tank. It is important that you complete all 3 of these steps in succession to avoid damaging the sprayer. For example, do not mix and add chemicals in the spray tank at night and then spray in the morning. This would cause the chemicals to separate and possibly damage the sprayer components.

Important: **The tank markings are for reference only and cannot be considered accurate for calibration.**

⚠ CAUTION

Chemicals are hazardous and can cause personal injury.

- **Read the directions on the chemical labels before handling the chemicals, and follow all manufacturer recommendations and precautions.**
- **Keep chemicals away from your skin. Should contact occur, wash the affected area thoroughly with soap and clean water.**
- **Wear goggles and any other protective equipment recommended by the chemical manufacturer.**

The Multi Pro WM has been specifically designed to have high durability to give it the long sprayer life you need. Different materials have been chosen for specific reasons at different locations on your sprayer to meet this goal. Unfortunately, there is no single material which is perfect for all foreseeable applications.

Some chemicals are more aggressive than others and each chemical interacts differently with various materials. Some consistencies (e.g., wettable powders, charcoal) are more abrasive and lead to higher wear rates. If a chemical is available in a formulation that would provide increased life to the sprayer, use this alternative formulation.

As always, remember to clean your machine and spray system thoroughly after all applications. This ensures that your sprayer has a long and trouble-free life.

Spraying

Using the Sprayer

Important: **To ensure that your solution remains well mixed, use the agitation feature whenever you have solution in the tank. For agitation to work, you must engage the PTO and the engine must be running above an idle. If you stop the vehicle and need the agitation on, place the shift lever in the NEUTRAL position, engage the parking brake, engage the PTO, engage the clutch, and set the hand throttle, if equipped.**

Note: This procedure assumes that the PTO is engaged (HD-series models with a manual transmission) and the section valve calibration is complete.

1. Lower the booms into position.
2. Set the master-section switch to the OFF position.
3. Set the individual section switches, as needed, to the ON positions.
4. Drive to the location where you plan to spray.
5. Navigate to the Application Rate screen on the InfoCenter and set the desired rate by performing the following steps:
   A. Ensure that the switch for the pump is in the ON position.
   B. For HD-series models with a manual transmission, select the desired gear range.
   C. Begin driving at your target ground speed.
   D. Verify that the monitor displays the correct application rate. If needed, adjust the application-rate switch until the monitor displays the desired application rate.
   E. Return to the location where you are spraying.
6. Set the master-section switch to the ON position and begin spraying.

   Note: When the tank is nearly empty, the agitation may cause foaming in the tank. To prevent this, turn the agitation valve off. Alternatively, you can use an anti-foaming agent in the tank.
7. When finished spraying, set the master-section switch to the OFF position to turn off all spay sections, and disengage the PTO lever (HD-series models with a manual transmission).

Turf Care Precautions while Operating in Stationary Modes

Important: **Under some conditions, heat from the engine, radiator, and muffler can potentially damage grass when operating the sprayer in a stationary mode. Stationary modes include tank agitation, hand spraying with a spray gun, or using a walking boom.**

Use the following precautions:

- **Avoid** stationary spraying when conditions are extremely hot and/or dry, as turf can be more stressed during these periods.
- **Avoid** parking on the turf while stationary spraying. Park on a cart path whenever possible.
- **Minimize** the amount of time that you leave the machine running over any particular area of turf. The extent of damage to the grass depends on both time and temperature.
- **Set the engine speed as low as possible** to achieve the desired pressure and flow. This minimizes the heat generated and the air velocity from the cooling fan.
- **Allow the heat to escape** upward from the engine compartment by raising the seat assemblies during stationary operation rather than being forced out under the vehicle.

Positioning the Spray Sections

The boom-section lift switches on the sprayer control panel allows you to move the outer spray sections between transport position and spray position without leaving the operator's seat. Whenever possible, stop the machine before changing spray section positions.

Setting the Hydraulic Lift Lock

Engage the hydraulic lift lever and lock it to provide hydraulic power for control of the boom lift.

1. Push forward the hydraulic-lift lever.

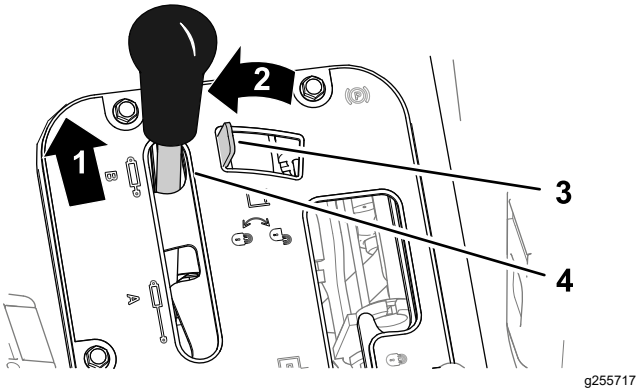

Figure 74
Manual Transmission Workman Vehicles

1. Push forward	3. Hydraulic-lift lock
2. Move left	4. Hydraulic-lift lever

2. Move the hydraulic-lift lock left to engage the lock.

Changing the Spray Section Position

Perform the following steps to move the outer spray sections to the SPRAY position:

1. Park the machine on a level surface.
2. Use the boom-section lift switches to lower the outer sections.

   Note: Wait until the outer spray sections reach the full, extended spray position.

Complete the sprayer job, then perform the following steps to retract the outer spray sections into the transport position:

1. Park the machine on a level surface.
2. Use the boom-section lift switches to raise one of the outer spray sections.
3. Use the boom-section lift switches to raise the other outer spray sections.
4. Raise the sections until they have moved completely into boom-section transport cradles forming the “X” transport position, and the lift cylinders are fully retracted.

   Important: **Release the boom-section lift switch(es) once the outer spray sections have reached the desired position. Running the actuators against the mechanical stops may damage the lift cylinders and/or other hydraulic components.**

   Important: **Ensure that the spray sections do not contact any low overhead objects while in the transport position, this can damage the spray sections.**

   Important: **The spray sections can be damaged by transporting them in any position other than the “X” transport position using the boom transport cradle.**

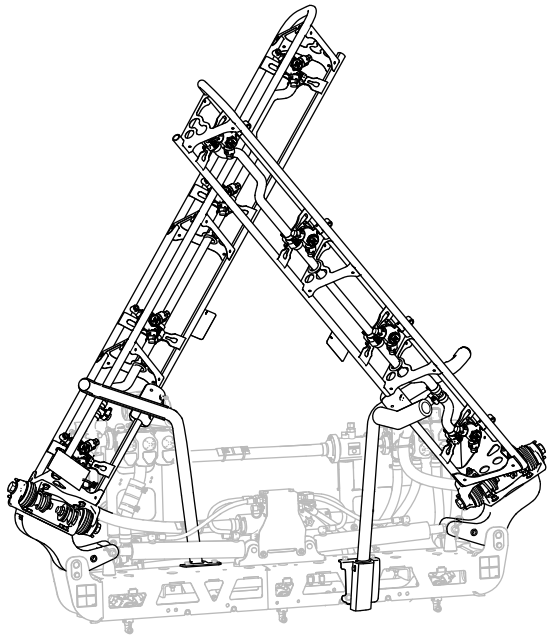

Figure 75
“X” transport position

Important: **To prevent damage to the lift cylinder, make sure that the actuators are fully retracted before transporting the machine.**

Spraying Tips

- Do not overlap areas where you have previously sprayed.
- Watch for plugged nozzles. Replace all worn or damaged nozzles.
- Use the master-section switch to stop the spray flow before stopping the sprayer. Once stopped, use the neutral engine speed lock to hold the engine speed up to keep the agitation running.
- You obtain better results if the sprayer is moving when you turn the spray sections on.
- Watch for changes in the application rate that may indicate that your speed has changed beyond the range of the nozzles or there is a problem with the spray system.

Unclogging a Nozzle

If a nozzle becomes clogged while you are spraying, clean the nozzle as follows:

1. Stop the sprayer on a level surface, shut off the engine, and engage the parking brake.
2. Set the master section switch to the OFF position and then set the sprayer-pump switch to the OFF position.
3. Remove the clogged nozzle and clean it using a spray bottle of water and a toothbrush.
4. Install the nozzle.

After Operation

After Operation Safety

- Park the machine on a level surface; engage the parking brake; shut off the engine; remove the key; and wait for all movement to stop before leaving the machine.
- After you finish operating the machine for the day, wash off all chemical residue from the outside of the machine; refer to Chemical Safety.
- Allow the engine to cool before storing the machine in any enclosure.
- Maintain and clean the seat belt(s) as necessary.
- Never store the machine or fuel container where there is an open flame, spark, or pilot light, such as on a water heater or other appliance.
- Keep all parts of the machine in good working condition and all hardware tightened.
- Replace all worn, damaged, or missing decals.

Cleaning the Sprayer System

Important: **Do not use brackish or reclaimed water to clean the machine.**

Draining the Sprayer Tank

1. Park the machine on a level surface, engage the parking brake, shut off the engine, and remove the key.
2. Locate the tank drain valve on the right side of the machine (Figure 76).

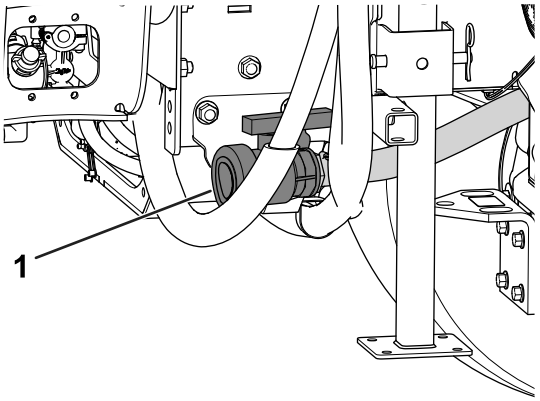

g208238

Figure 76

1. Tank-drain valve

3. Open the valve to drain all unused material from the tank (Figure 77).

Important: **Dispose of all waste chemicals according to local codes and the material manufacturer's instructions.**

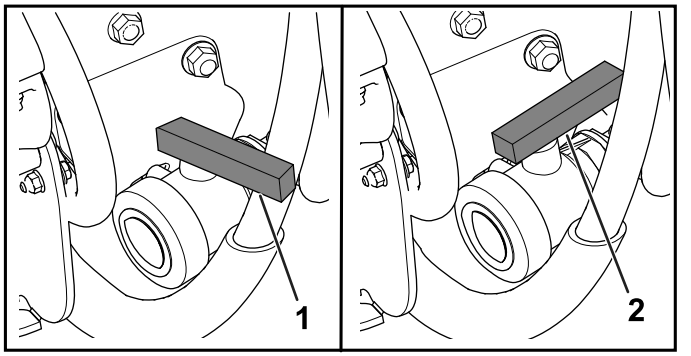

Figure 77

1. Valve closed
2. Valve open

4. Close the drain valve (Figure 77).

Cleaning the Sprayer

Important: **You must always empty and clean the sprayer immediately after each use. Failure to do so may cause the chemicals to dry or thicken in the lines, clogging the pump and other components.**

Use the approved rinse kit for this machine. Contact your authorized Toro distributor for more information.

Clean the spray system after **each** spraying session. To thoroughly clean the spray system, do the following:

- Use 3 separate rinses.
- Use the cleaners and neutralizers as recommended by the chemical manufacturers.
- Use pure clean water (no cleaners or neutralizers) for the **last** rinse.

1. Fill the tank with at least 190 L (50 US gallons) of clean fresh water and close the cover.

   Note: You can use a cleaning/neutralizing agent in the water as needed. On the final rinse, use only clean, clear water.
2. Lower the booms into the spray position.
3. Start the engine and set the pump switch to the ON position.
4. Move the throttle to a higher idle.
5. Ensure that the agitation switch is in the ON position and use the application-rate switch to increase the pressure to a high setting.
6. Set the master-section switch and individual section switches to the ON positions to begin spraying.
7. Allow all the water in the tank to spray out though the nozzles.
8. Check the nozzles to ensure that they are all spraying correctly.
9. Set the master-section switch to the OFF position, shut off the sprayer pump, and shut off the engine.
10. Repeat steps 1 through 9 at least 2 more times to ensure that the spray system is fully cleaned.

    Important: **You must always complete this procedure at least 3 times to ensure that the spray system is fully clean, preventing damage to the system.**
11. Clean the suction filter and pressure filter; refer to Cleaning the Suction Filter (page 60) and Cleaning the Pressure Filter (page 61).

    Important: **If you used wettable powder chemicals, clean the strainer after each tank.**
12. Using a garden hose, rinse off the outside of the sprayer with clean water.
13. Remove the nozzles and clean them by hand. Replace damaged or worn nozzles.

Cleaning the Suction Filter

Service Interval: Before each use or daily—Clean the suction filter. Clean the suction filter (more often when using wettable powders).

1. Park the machine on a level surface, engage the parking brake, shut off the pump, shut off the engine, and remove the key.
2. At the top of the sprayer tank, remove the retainer that secures the hose fitting attached to the large hose from the filter housing (Figure 78).

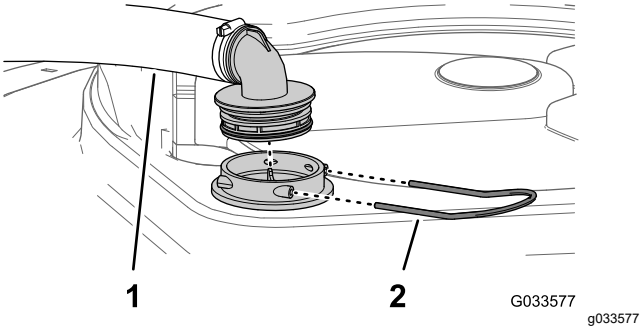

Figure 78

1. Suction hose
2. Retainer

3. Remove the hose and hose fitting from the filter housing (Figure 78).
4. Pull the suction strainer out of the filter housing in the tank (Figure 79).

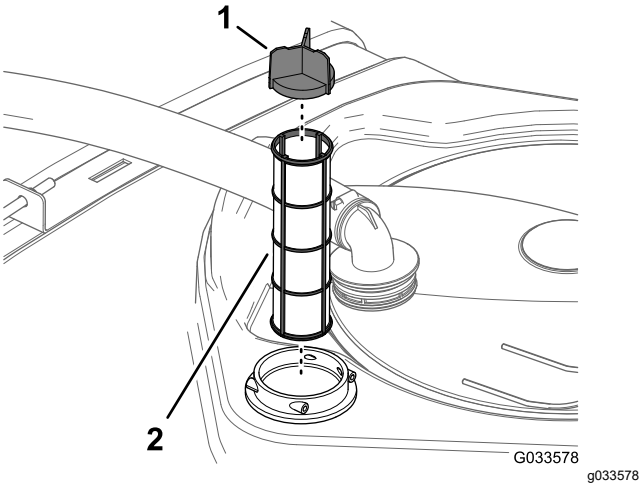

Figure 79

1. Screen vane
2. Suction strainer

5. Clean the suction filter with clean water.

   Important: **Replace the filter if it is damaged or cannot be cleaned.**

6. Insert the suction filter into the filter housing until the filter is fully seated.
7. Align the hose and hose fitting to the filter housing at the top of the tank, and secure fitting and housing with the retainer that you removed in step 2.

Cleaning the Pressure Filter

Service Interval: Before each use or daily—Clean the pressure filter. Clean the pressure filter (more often when using wettable powders).

1. Park the machine on a level surface, engage the parking brake, shut off the sprayer pump, shut off the engine, and remove the key.
2. Align a drain pan under the pressure filter (Figure 80).

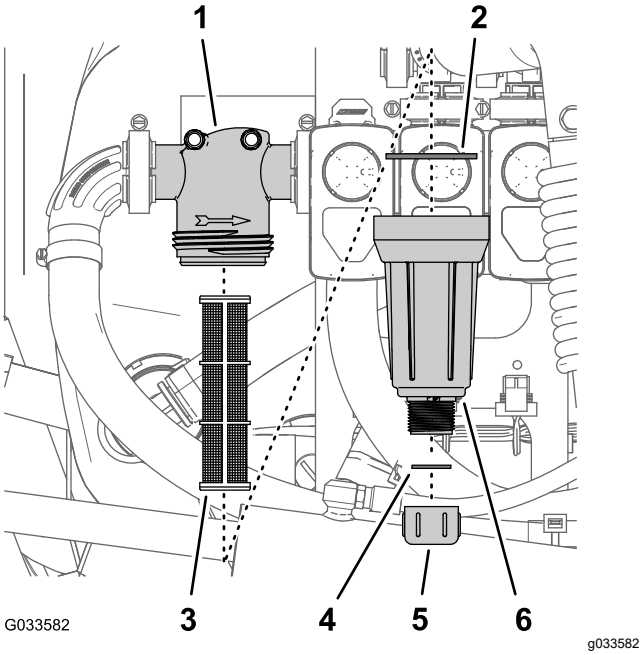

Figure 80

1. Filter head
2. Gasket (bowl)
3. Filter element
4. Gasket (drain plug)
5. Drain cap
6. Bowl

3. Rotate the drain cap counterclockwise and remove it from the bowl of the pressure filter (Figure 80).

   Note: Allow the bowl to drain completely.

4. Rotate the bowl counterclockwise and remove the filter head (Figure 80).
5. Remove the pressure filter element (Figure 80).
6. Clean the pressure filter element with clean water.

   Important: **Replace the filter if it is damaged or cannot be cleaned.**

7. Check the gasket for the drain plug (located inside the bowl) and the gasket for bowl (located inside the filter head) for damage and wear (Figure 80).

   Important: **Replace any damaged or worn gaskets for the plug, bowl, or both.**

8. Install the pressure filter element into the filter head (Figure 80).

   Note: Ensure that the filter element is firmly seated into the filter head.

9. Install the bowl onto the filter head, and tighten by hand (Figure 80).
10. Assemble the drain cap onto the fitting at the bottom of the bowl, and tighten the cap by hand (Figure 80).

Cleaning the Nozzle Filter

1. Park the machine on a level surface, engage the parking brake, shut off the sprayer pump, shut off the engine, and remove the key.
2. Remove the nozzle from the spray turret (Figure 81).

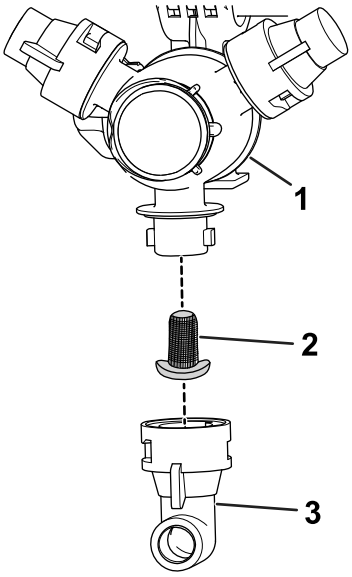

Figure 81

1. Spray turret
2. Nozzle filter
3. Nozzle

3. Remove the nozzle filter (Figure 81).
4. Clean the nozzle filter with clean water.

   Important: **Replace the filter if it is damaged or cannot be cleaned.**

5. Install the nozzle filter (Figure 81).

   Note: Ensure that the filter is fully seated.

6. Install the nozzle onto the spray turret (Figure 81).

Conditioning the Spray System

Service Interval: After each use—Condition the spray system at the end of each daily use.

Conditioner Specification

Conditioner specification: propylene glycol "non-toxic RV antifreeze" with corrosion inhibitor

Important: **Use only propylene glycol with corrosion inhibitor.**

Do not use recycled propylene glycol. Do not use ethylene glycol base antifreeze.

Do not use propylene glycol with soluble alcohols (methanol, ethanol, or isopropanol) or brines added.

Preparing the Conditioner

1. Move the machine to a level surface, set the parking brake, shut off the engine, and remove the key.
2. Add conditioner to the tank as follows:
   - For ready to use (premixed) propylene glycol RV antifreeze—add 10 gallons of propylene glycol RV antifreeze to the tank.
   - For concentrated propylene glycol RV antifreeze, perform the following steps:
     A. Add a 10 gallon mixture of propylene glycol RV antifreeze and water into the sprayer tank. Prepared the antifreeze mixture as instructed manufacturer for a concentration rated for -45°C (-50°F) minimum.

        Important: **Use only clean water when cleaning the sprayer.**

     B. Start the engine and set the spray-pump switch to the ON position.
     C. Press the accelerator pedal to increase the engine speed.
     D. Set the agitation switch to the ON position.

        Allow the conditioner and water solution to circulate for 3 minutes or longer.

Spraying the Conditioner

Recommended tool: a clear catch container.

1. Move the machine to the drain pad area and set the parking brake.
2. Lower the outer booms sections.
3. Set the left, center, and right section switches and the master section switch to the ON position.
4. Allow the spray system to spray until the nozzles discharge the conditioner.

   Note: Most propylene glycol RV antifreeze is colored pink. Use the catch container to sample the sprayer discharge at several of the nozzles.
5. Shut off the master section switch, 3 section switches, agitation switch, spray-pump switch, engine, and remove the key.

Transporting or Towing the Machine

For information on transporting or towing the machine, refer to the *Operator's Manual* for your Workman vehicle.

Important: **Tie outer spray sections to the boom-section transport cradles.**

Maintenance

Note: Download a free copy of the electrical or hydraulic schematic by visiting www.Toro.com and searching for your machine from the Manuals link on the home page.

Note: Determine the left and right sides of the machine from the normal operating position.

Maintenance Safety

- Before you leave the operator's position, do the following:
  - Park the machine on a level surface.
  - Shift the transmission into the NEUTRAL position.
  - Engage the parking brake.
  - Shut off the engine and remove the key (if equipped).
  - Wait for all movement to stop.
- Allow machine components to cool before performing maintenance.
- Allow only qualified and authorized personnel to maintain, repair, adjust, or inspect the machine.
- Before performing any maintenance, thoroughly clean and rinse the sprayer; refer to Chemical Safety.
- Chemicals used in the sprayer system may be hazardous and toxic to you, bystanders, animals, plants, soils, or other property.
  - Carefully read and follow the chemical warning labels and safety data sheets (SDSs) for all chemicals used, and protect yourself according to the chemical manufacturer's recommendations.
  - Always protect your skin while you are near chemicals. Use the appropriate personal protective equipment (PPE) to guard against contact with chemicals, including the following:
    - ◊ safety glasses, goggles, and/or face shield
    - ◊ a chemical suit
    - ◊ a respirator or filter mask
    - ◊ chemical-resistant gloves
    - ◊ rubber boots or other substantial footwear
    - ◊ a clean change of clothes, soap, and disposable towels for cleanup
  - Refuse to operate or work on the sprayer if chemical safety information is not available.
  - Do not fill, calibrate, or clean the machine while people, especially children, or pets are in the area.
  - Handle chemicals in a well-ventilated area.
  - Have clean water available, especially when filling the spray tank.
  - Do not eat, drink, or smoke while working near chemicals.
  - Do not clean spray nozzles by blowing through them or placing them in your mouth.
  - Always wash your hands and other exposed areas as soon as possible after working with chemicals.
  - Chemicals and fumes are dangerous; never enter the tank or place your head over or in the opening of a tank.
- To ensure that the entire machine is in good condition, keep all hardware properly tightened.
- To reduce the potential for fire, keep the engine area free of excessive grease, chemicals, grass, leaves, and dirt.
- If you must run the engine to perform a maintenance adjustment, keep your hands, feet, clothing, and any parts of your body away from the engine and any moving parts. Keep everyone away.
- Do not adjust the ground speed of the machine. To ensure safety and accuracy, have an authorized Toro distributor check the ground speed.
- If the machine requires a major repair or you need technical help, contact an authorized Toro distributor.
- Modifying this machine in any manner may affect machine operation, performance, durability, or its use, and result in injury or death. Such use could void the product warranty.
- Support the machine with jack stands whenever you work under the machine.
- Carefully release pressure from components with stored energy.

Recommended Maintenance Schedule(s)

Maintenance Service Interval	Maintenance Procedure
Before each use or daily	• Check the tank straps. • Clean the suction filter. • Clean the pressure filter.
After each use	• Condition the spray system at the end of each daily use.
Every 50 hours	• Lubricate the pump.
Every 100 hours	• Lubricate the boom hinges.
Every 200 hours	• Inspect all hoses and connections for damage and proper attachment. • Clean the flow meter (more often when using wettable powders).
Every 400 hours	• Inspect the O-rings in the valve assemblies and replace them if necessary. • Change the suction filter. • Change the pressure filter. • Inspect the pump diaphragm and replace if necessary. • Inspect the pump check valves and replace if necessary. • Inspect the nylon pivot bushings.
Yearly	• Calibrate the agitation bypass valve. • Flush the sprayer with clean water.

Important: **Refer to the *Operator's Manual* for your machine and the engine owner's manual for additional maintenance procedures.**

Daily Maintenance Checklist

Duplicate this page for routine use.

Maintenance Check Item	For the week of:						
	Mon.	Tues.	Wed.	Thurs.	Fri.	Sat.	Sun.
Check the brake and parking brake operation.							
Check the gear shift/neutral operation.							
Check the fuel level.							
Check the engine oil level before filling the tank.							
Check the transaxle oil level before filling the tank.							
Inspect the air filter before filling the tank.							
Inspect the engine cooling fins before filling the tank.							
Check any unusual engine noises.							
Check any unusual operating noises.							
Check the tire pressure.							
Check for fluid leaks.							
Check the instrument operation.							
Check the accelerator operation.							
Clean the suction strainer.							
Check toe-in.							
Lubricate all grease fittings.[1]							
Touch up and damaged paint.							

[1]Immediately after **every** washing, regardless of the interval listed

Notation for Areas of Concern

Inspection performed by:		
Item	**Date**	**Information**
1		
2		
3		
4		
5		
6		
7		
8		
9		
10		

Pre-Maintenance Procedures

⚠ CAUTION

If you leave the key in the starter switch, someone could accidently start the engine and seriously injure you or bystanders.

Remove the key from the starter switch and disconnect the negative battery cable from the battery before you do any maintenance. Set the battery cable aside so that it does not accidentally contact the battery post.

Accessing the Machine

Raising the Tank Assembly

⚠ DANGER

The sprayer tank assembly represents a stored energy hazard. If not properly retained when installing or removing the assembly, it can move or fall and injure you or other bystanders.

Use straps and an overhead lift to support the sprayer tank assembly during installation, removal, or any maintenance whenever you remove the retaining fasteners.

You can raise up the tank assembly to access to the engine and other internal components. Pivot the boom extension forward to distribute the weight more evenly.

1. Empty the spray tank.
2. Park the vehicle on a level surface.
3. Use the boom-control switches to raise the boom extension to approximately 45°.
4. Engage the parking brake, shut off the engine, and remove the key.
5. Disconnect the battery.
6. Remove the safety bolts from the front of the skid (Figure 82).

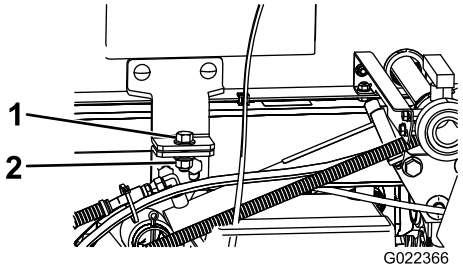

g022366

Figure 82

1. Bolt (1/2 x 1-1/2 inches) 2. Locknut (1/2 inch)

7. Disconnect the center console harness from the main harness and un-route the main harness for slack.
8. Fold the boom extensions forward, alongside the tank assembly to distribute the weight more evenly, and keep it from tipping backward.
9. Raise the tank assembly until the lift cylinders are fully extended.
10. Remove the bed support from the storage brackets at back of the ROPS panel (Figure 83).

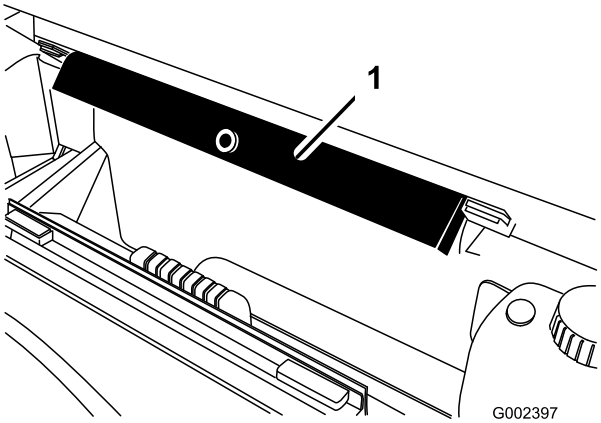

g002397

Figure 83

1. Bed support

11. Push the bed support onto the cylinder rod, making sure that the support end tabs rest on

the end of cylinder barrel and on the rod end of the lift cylinder (Figure 84).

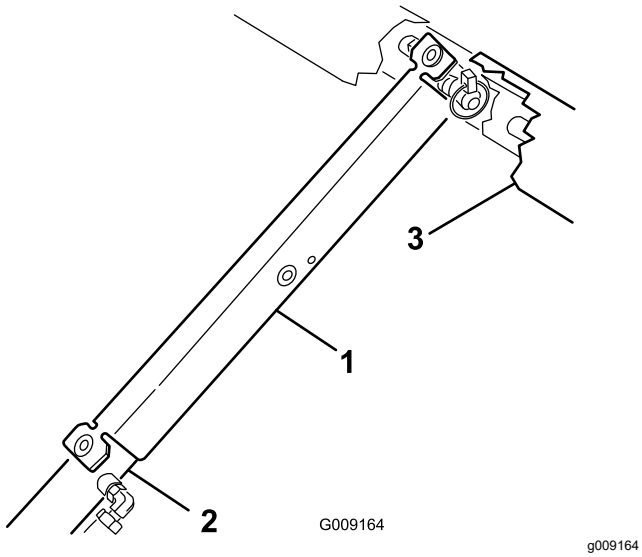

Figure 84

1. Bed support
2. Cylinder barrel
3. Bed

Lowering the Tank Assembly

1. When you are ready to lower the tank assembly, remove the bed support from the cylinder and insert it into the brackets on the back of the ROPS panel.

   Important: **Do not try to lower the tank assembly with the bed safety support on the cylinder.**

2. Retract the lift cylinders to carefully lower the tank to the frame.
3. Install the 2 hold down bolts and fasteners to secure the tank assembly.
4. Fold the boom extensions rearward to the extended position.
5. Use the boom-control switches to raise the boom extensions to the TRANSPORT position.
6. Route the main harness to take up the slack and connect it to the center console harness.

Lubrication

Greasing the Sprayer Pump

Service Interval: Every 50 hours

Grease Type: Mobil XHP 461

1. Locate the grease fittings on the sprayer pump.

   Note: The pump is located at the rear end of the machine.

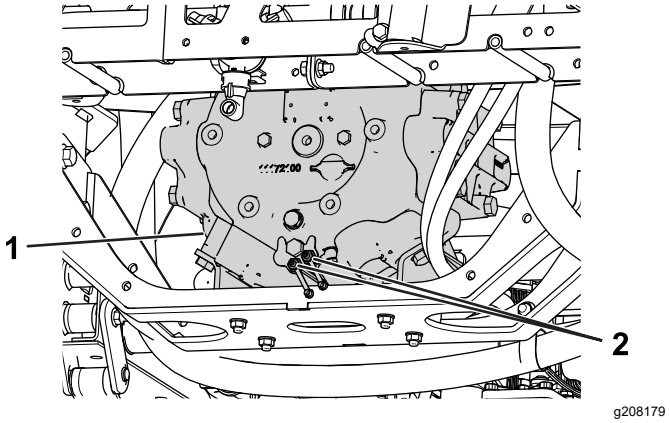

Figure 85

1. Sprayer pump
2. Grease fitting

2. Wipe the 2 remote grease fittings clean.
3. Pump grease into each remote grease fitting.
4. Wipe off the excess grease.

Greasing the Boom Hinges

Service Interval: Every 100 hours

Important: **If you wash the boom hinge with water, clear all water and debris from the hinge assembly and apply fresh grease.**

Grease Type: No. 2 lithium grease

1. Wipe the grease fittings clean so that foreign matter cannot be forced into the bearing or bushing.
2. Pump grease into the bearing or bushing at each fitting Figure 86.

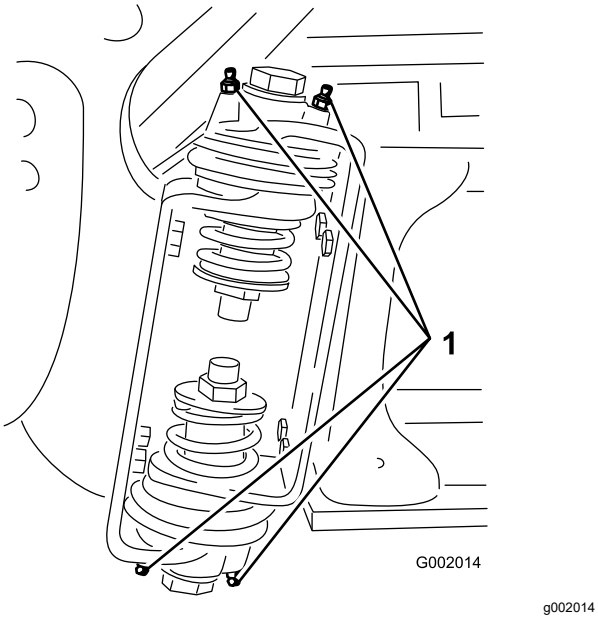

Figure 86
Right boom

1. Grease fitting

3. Wipe off excess grease.
4. Repeat this procedure for each boom pivot.

Electrical System Maintenance

Electrical System Safety

- Disconnect the battery before repairing the machine. Disconnect the negative terminal first and the positive last. Connect the positive terminal first and the negative last.
- Charge the battery in an open, well-ventilated area, away from sparks and flames. Unplug the charger before connecting or disconnecting the battery.
- Wear protective clothing and use insulated tools.

Replacing the Fuses

The sprayer system fuse block is mounted to the end of the fuse block for the vehicle. Replace an open fuse with a fuse of the same type and amperage.

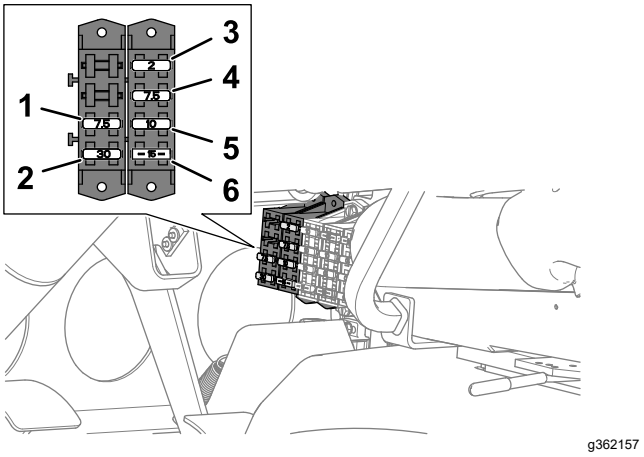

Figure 87

1. 7.5 A—TEC controller (sprayer power and rinse pump relay)
2. 30 A—tank rinse
3. 2 A—TEC controller (logic)
4. 7.5 A—TEC controller (output)
5. 10 A—switched power
6. 15 A—sprayer boom

Spray System Maintenance

Inspecting the Hoses

Service Interval: Every 200 hours

Every 400 hours/Yearly (whichever comes first)

Examine each hose in the spray system for cracks, leaks, or other damage. At the same time, inspect the connections and fittings for similar damage. Replace any hoses and fittings if they are damaged.

Changing the Suction Filter

Service Interval: Every 400 hours

Note: Determine the appropriate suction filter mesh size that you need for your job; refer to Selecting a Suction Filter (page 47).

1. Park the machine on a level surface, engage the parking brake, shut off the pump, shut off the engine, and remove the key.
2. At the top of the sprayer tank, remove the retainer that secures the hose fitting attached to the large hose from the filter housing (Figure 88).

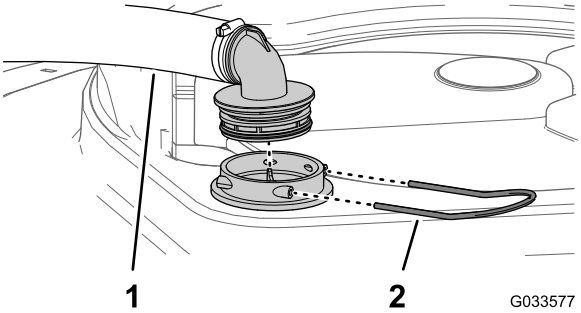

Figure 88

1. Suction hose
2. Retainer

3. Remove the hose and hose fitting from the filter housing (Figure 88).
4. Remove the old suction filter from the filter housing in the tank (Figure 89).

   Note: Discard the old filter.

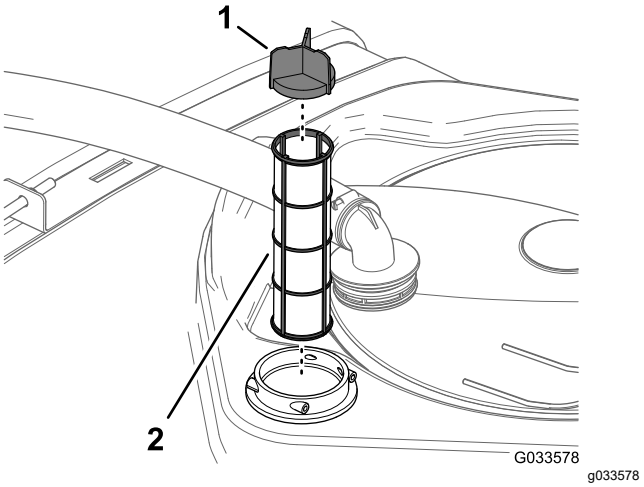

Figure 89

1. Screen vane
2. Suction filter

5. Install the new suction filter into the filter housing.

   Note: Ensure that the filter is fully seated.
6. Align the hose and hose fitting to the filter housing at the top of the tank, and secure the fitting and housing with the retainer that you removed in step 2.

Changing the Pressure Filter

Service Interval: Every 400 hours

Note: Determine the appropriate pressure filter mesh size that you need for your job; refer to Selecting a Pressure Filter (page 48).

1. Park the machine on a level surface, engage the parking brake, shut off the sprayer pump, shut off the engine, and remove the key.
2. Align a drain pan under the pressure filter (Figure 90).

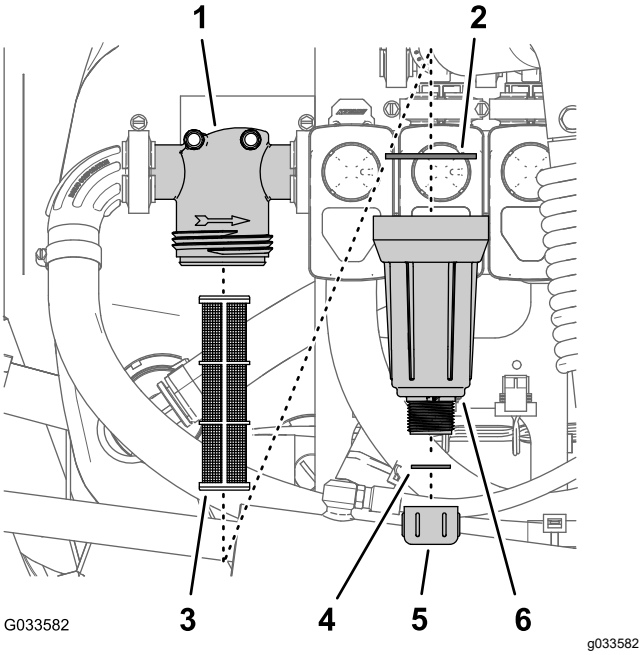

Figure 90

1. Filter head
2. Gasket (bowl)
3. Filter element
4. Gasket (drain plug)
5. Drain cap
6. Bowl

3. Rotate the drain cap counterclockwise and remove it from the bowl of the pressure filter (Figure 90).

   Note: Allow the bowl to drain completely.

4. Rotate the bowl counterclockwise and remove the filter head (Figure 90).
5. Remove the old pressure filter element (Figure 90).

   Note: Discard the old filter.

6. Check the gasket for the drain plug (located inside the bowl) and the gasket for bowl (located inside the filter head) for damage and wear (Figure 90).

   Note: Replace any damaged or worn gaskets for the plug, bowl, or both.

7. Install the new pressure filter element into the filter head (Figure 90).

   Note: Ensure that the filter element is firmly seated into the filter head.

8. Install the bowl onto the filter head, and tighten by hand (Figure 90).
9. Assemble the drain cap onto the fitting at the bottom of the bowl, and tighten the cap by hand (Figure 90).

Changing the Nozzle Filter

Note: Determine the appropriate nozzle filter mesh size that you need for your job; refer to Selecting a Nozzle-Tip Filter (Optional) (page 49).

1. Park the machine on a level surface, engage the parking brake, shut off the sprayer pump, shut off the engine, and remove the key.
2. Remove the nozzle from the spray turret (Figure 91).

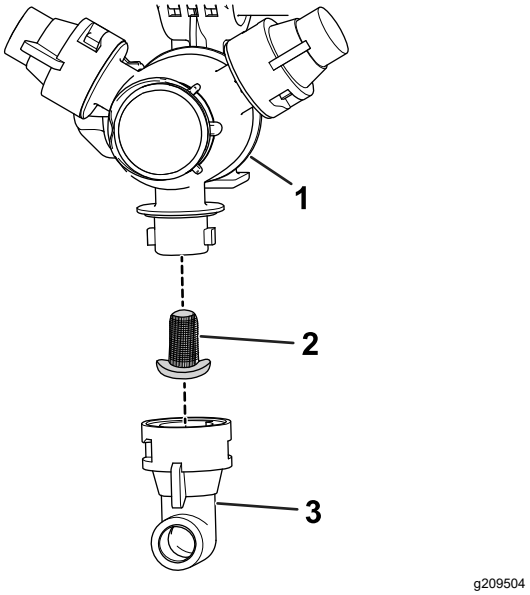

Figure 91

1. Spray turret
2. Nozzle filter
3. Nozzle

3. Remove the old nozzle filter (Figure 91).

   Note: Discard the old filter.

4. Install the new nozzle filter (Figure 91).

   Note: Ensure that the filter is fully seated.

5. Install the nozzle onto the spray turret (Figure 91).

Inspecting the Sprayer Pump

Service Interval: Every 400 hours/Yearly (whichever comes first)—Inspect the pump diaphragm and replace if necessary. (contact your authorized Toro distributor).

Every 400 hours/Yearly (whichever comes first)—Inspect the pump check valves and replace if necessary. (contact your authorized Toro distributor).

Note: The following machine components are considered parts subject to consumption through use unless found defective and are not covered by the Warranty associated with this machine.

Have an authorized Toro distributor check the following internal pump components for damage:

- Pump diaphragm
- Pump check valve assemblies

Replace any components if necessary.

Inspecting the Nylon Pivot Bushings

Service Interval: Every 400 hours/Yearly (whichever comes first)

1. Park the machine on a level surface, engage the parking brake, shut off the pump, shut off the engine, and remove the key.
2. Extend the outer-boom sections to the spray position and support the boom sections using stands or straps and lifting equipment.
3. Remove the bolt and nut that secure the pivot pin, and remove the pin (Figure 92).

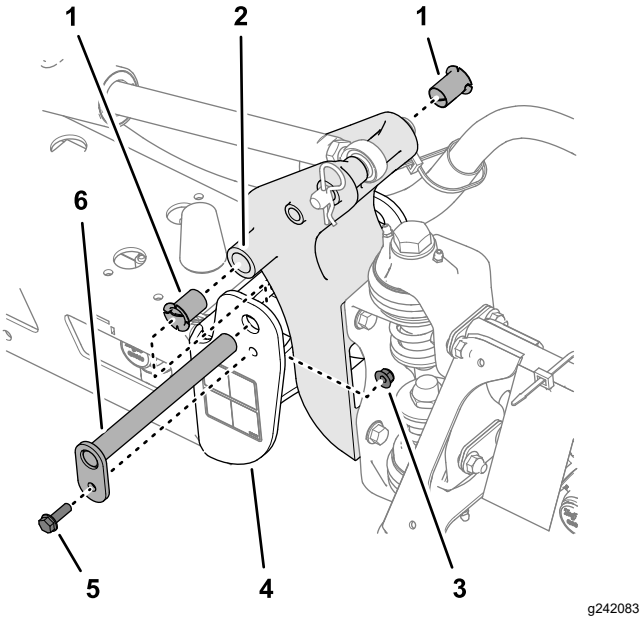

Figure 92

1. Nylon bushings
2. Pivot bracket
3. Flange locknut
4. End channel (center frame)
5. Flange bolt
6. Pivot pin

4. Remove the boom and pivot bracket assembly from the end channel of the center frame to access the nylon bushings.
5. Remove and inspect the nylon bushings from the front and back sides of the pivot bracket (Figure 92).

   Note: Replace any worn or damaged bushings.
6. Lubricate the nylon bushings with a small amount of oil and install the bushings into pivot bracket (Figure 92).
7. Align the holes in the pivot bracket with the holes in the end channel (Figure 92).
8. Install the pivot pin and secure it with the flange bolt and flange locknut removed in step 3.
9. Repeat steps 2 through 8 for the other outer-boom section.

Adjusting the Booms to Level

The following procedure can be used to adjust the actuators on the center boom to keep the left and right booms at level.

1. Extend the booms to the spray position.
2. Remove the cotter pin from the pivot pin (Figure 93).

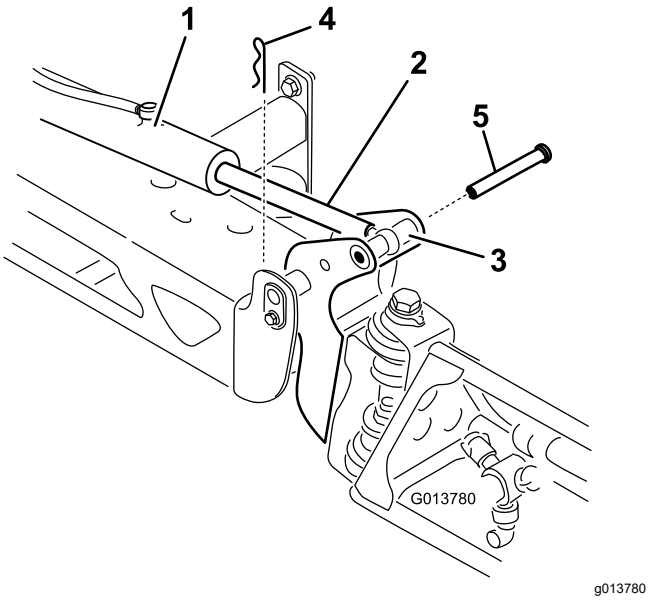

Figure 93

1. Actuator
2. Actuator rod
3. Boom-pivot pin housing
4. Cotter
5. Pin

3. Lift up on the boom and remove the pin (Figure 93), and slowly lower the boom to the ground.
4. Inspect the pin for any damage, and replace it if necessary.
5. Use a wrench on the flat sides of the actuator rod to immobilize it, then loosen the jam nut to allow the eyelet rod to be adjusted (Figure 94).

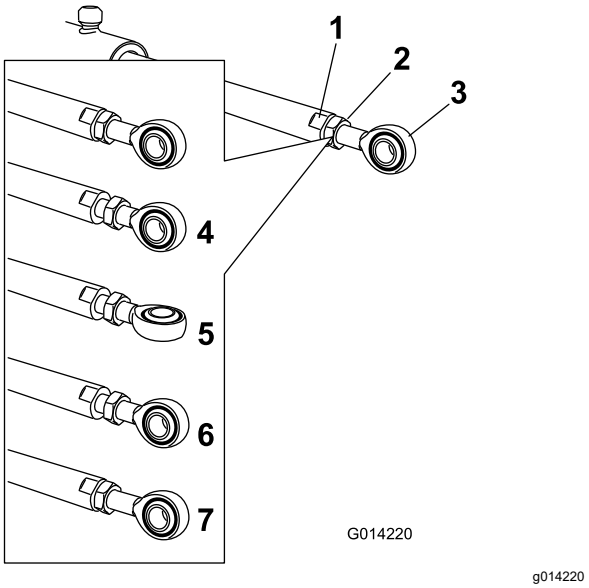

Figure 94

1. Flat on the actuator rod
2. Jam nut
3. Eyelet
4. Jam nut loosened
5. Eyelet adjusted
6. Eyelet position for assembly
7. Jam nut tightened to lock new position

6. Turn the eyelet rod in the actuator rod to shorten or lengthen the extended actuator to the desired position (Figure 94).

   Note: You must turn the eyelet rod in half or complete revolutions so that you can assemble the rod to the boom.

7. Once the desired position has been achieved, tighten the jam nut to secure the actuator and eyelet rod.
8. Raise the boom to align the pivot with the actuator rod.
9. While holding the boom, insert the pin through both boom pivot and actuator rod (Figure 93).
10. With the pin in place, release the boom and secure the pin with the cotter previously removed.
11. Repeat the procedure for each actuator rod bearing, if necessary.

Cleaning

Important: **Do not use brackish or reclaimed water to clean the machine.**

Cleaning the Flow Meter

Service Interval: Every 200 hours/Yearly (whichever comes first) (more often when using wettable powders).

1. Thoroughly rinse and drain the entire spraying system.
2. Remove the flow meter from the sprayer and flush it with clean water.
3. Remove the retainer ring on the upstream side.

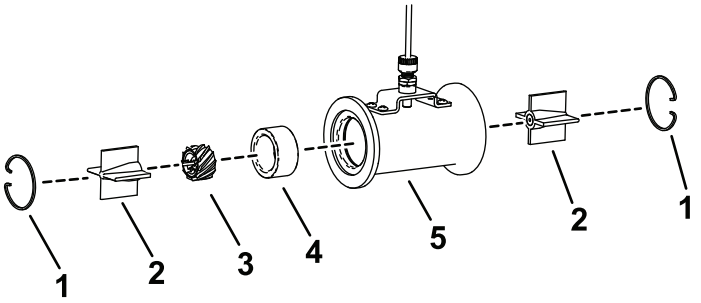

g614966

Figure 95

1. Retaining ring
2. Bearing assembly
3. Turbine
4. Collar
5. Housing

4. Clean the turbine, bearing assembly, and the collar to remove metal filings and any wettable powders.

   Important: **Add a mark onto the turbine to indicate installation direction. It is important to install it the same way it is being removed.**

5. Inspect the face of the turbine for wear. Turn the flow meter 180 degrees for installation if the face is showing signs of wear.

   Note: If both sides of the turbine show wear, replace the flow meter.

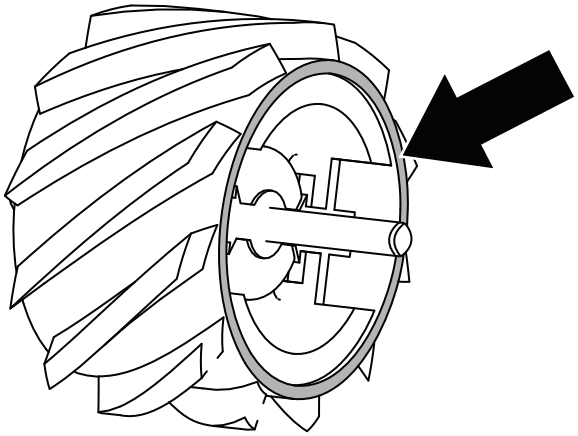

g614968

Figure 96

6. Inspect the shaft end for cupping wear.
   - A—the shaft is showing no wear; the turbine is usable.
   - B—the cupping is inside the bevel; rotate the turbine 180 degrees.
   - C—the cupping is nearly at the edge; rotate the turbine 180 degrees.
   - D—the cupping is at the edge and is flaring out; replace the flow meter.

   Note: If both shaft ends are showing wear, replace the flow meter.

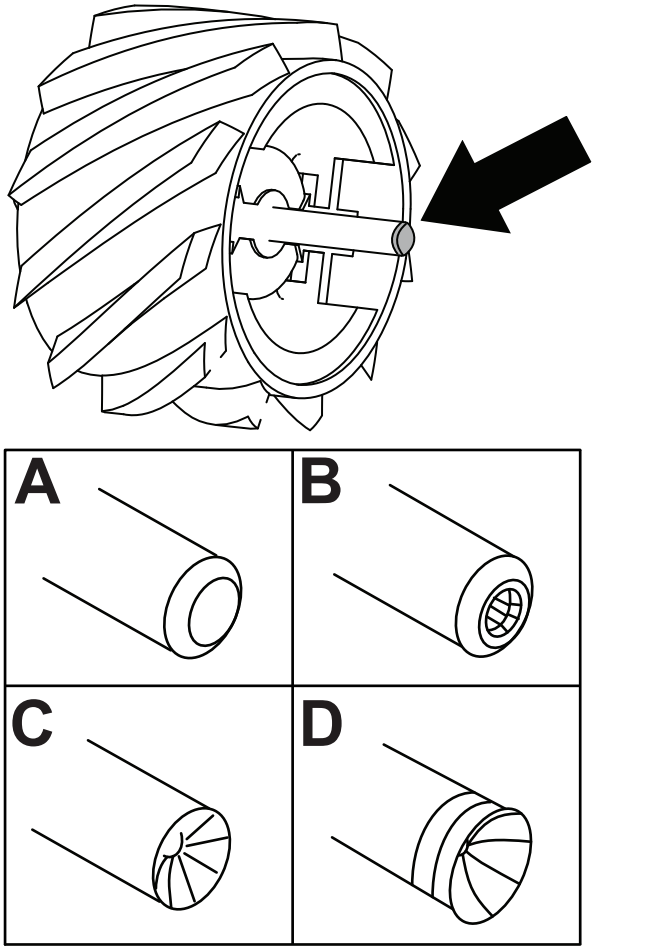

Figure 97

7. Assemble the flow meter.
8. Use a low pressure (50 kPa or 5 psi) air jet to ensure that the turbine spins freely.
9. Calibrate the flow meter; refer to your *Software Guide*.

Storage

Storage Safety

- Before you leave the operator's position, do the following:
  - Park the machine on a level surface.
  - Shut off the spray pump.
  - Engage the parking brake.
  - Shut off the engine and remove the key (if equipped).
  - Wait for all movement to stop.
  - Allow the machine to cool before adjusting, servicing, cleaning, or storing it.
- Do not store the machine or fuel container where there is an open flame, spark, or pilot light, such as on a water heater or other appliance.

Preparing the Machine for Storage

Short-Term Storage

(Less than 30 days)

Perform the procedures that follow:

1. Cleaning (page 74)
2. Preparing to Condition the Sprayer (page 76)
3. Conditioning the Sprayer (page 76)

Cleaning the Exterior of the Machine

Important: **Do not use brackish or reclaimed water to clean the machine.**

1. Park the machine on a level surface; engage the parking brake; shut off the spray pump and the engine; remove the key; and wait for all movement to stop before leaving the machine.

   Note: For HD- and HDX-Series Workman models with a manual transmission, disengage the PTO.

2. Clean dirt and grime from the entire machine, including the outside of the cylinder-head fins of the engine and blower housing.

   Important: **You can wash the machine with mild detergent and water. Do not use high-pressure water to wash the machine. Pressure washing may damage the electrical system or wash away necessary grease at friction points. Avoid excessive use of water, especially near the control panel, lights, engine, and the battery.**

Preparing to Condition the Sprayer

1. Move the machine to the drain pad area, engage the parking brake, shut off the spray pump, shut off the engine, remove the key, and wait for all movement to stop before leaving the operator's position.
2. Drain the fresh-water tank and leave the tank spigot open.
3. Drain the sprayer tank as completely as possible.
4. Prepare rust inhibiting, non-alcohol based, RV antifreeze solution; refer to Preparing the Conditioner (page 62).
5. Remove 1 of the pressure-sense tubes from the push-to-connect fitting as shown in Figure 98.

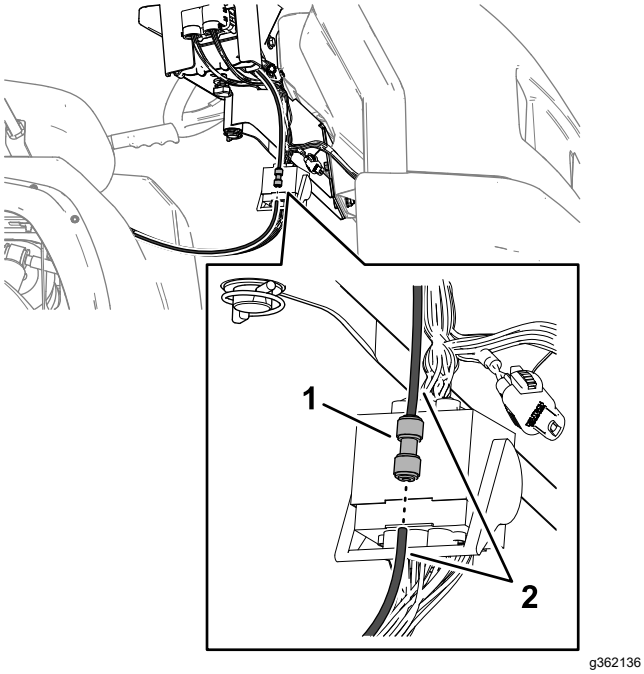

Figure 98

1. Push-to-connect fitting
2. Pressure-gauge tube

6. Start the engine and lower the outer booms sections.

Conditioning the Sprayer

1. Run the spray pump for a few minutes to circulate the RV antifreeze throughout the spray system and any installed spray accessories.
2. Turn the left, center, and right section switches to the ON position.
3. Turn the master section switch to the ON position and look for the following:
   - Ensure that RV anti-freeze flows from the disconnected end of the pressure-gauge tube.
   - Spray out the nozzle until the RV anti-freeze is visible.
4. Turn the master section switch to the OFF position.
5. Turn the pump switch to the OFF position.
6. Use the boom-section lift switches to raise the outer boom sections.

   Raise the boom sections until they have moved completely into boom-transport cradle forming the "X" transport position and the lift cylinders are fully retracted.

   Note: Make sure that the lift cylinders are fully retracted to prevent actuator rod damage.
7. Shut off the engine.
8. Drain the sprayer tank as completely as possible.

Long-Term Storage

(Longer than 30 days)

1. Grease the sprayer; refer to Lubrication (page 68).
2. Check and tighten all bolts, nuts, and screws.

   Note: Repair or replace any parts that are worn or damaged.
3. Check the condition of all spray hoses.

   Note: Replace any hoses that are worn or damaged.
4. Tighten all hose fittings.
5. Paint all scratched or bare metal surfaces with paint is available from your authorized Toro distributor.
6. If needed, prepare the vehicle for long-term storage; refer to the *Operator's Manual* for your vehicle.
7. Store the machine in a clean, dry garage or storage area.
8. Cover the machine to protect it and keep it clean.

Preparing the Machine for Service

1. Insert the pressure-sense tube into the push-to-connect fitting until it is fully seated (Figure 99).

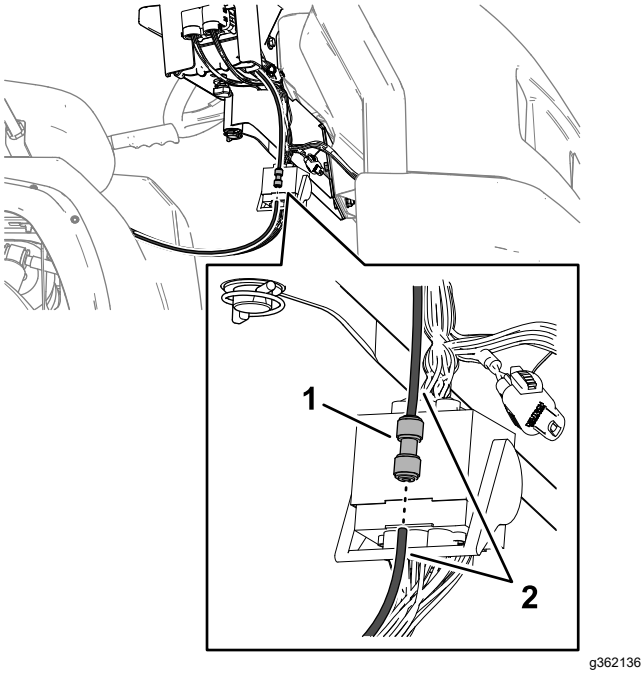

Figure 99

1. Push-to-connect fitting
2. Pressure-gauge tube

2. Close the spigot of the fresh-water tank.
3. Add fuel to the fuel tank.
4. Service the vehicle; refer to the *Operator's Manual* for your vehicle.

Removing the Sprayer and Tank Skid

Lifting equipment capacity: 408 kg (900 lb)

⚠ DANGER

The sprayer tank assembly presents a stored energy hazard. If not properly retained when installing or removing the assembly, it can move or fall and injure you or bystanders.

Use straps and an overhead lift to support the sprayer tank assembly during installation, removal, or any maintenance whenever you remove the retaining fasteners.

Preparing the Center Console

1. Disconnect the battery cables from the battery; refer to 6 Disconnecting the Battery (page 15).
2. Separate the fuse block of the sprayer from the fuse block of the machine and disconnect the wiring between the 2 fuse blocks; refer to 11 Installing the Sprayer Fuse Block (page 20).
3. Remove the wire harness from J-clips; refer to Routing the Rear Electrical Harness for the Sprayer to the Control Console (page 19).
4. Loosen the hand knob that is located below the console and remove the hairpin; refer to Installing the Control Console to the Machine (page 18).
5. Disconnect the terminals of the wires that connect the fuse block for the sprayer with the fuse block of the machine; refer to 11 Installing the Sprayer Fuse Block (page 20).
6. Separate the fuse block for the sprayer from the fuse block for the machine; refer to 11 Installing the Sprayer Fuse Block (page 20).
7. Remove the console from the console-mounting bracket at the dash of the machine and align the pivot pin on the control console with the storage bracket at the front tank strap (Figure 100); refer to Installing the Control Console to the Machine (page 18).

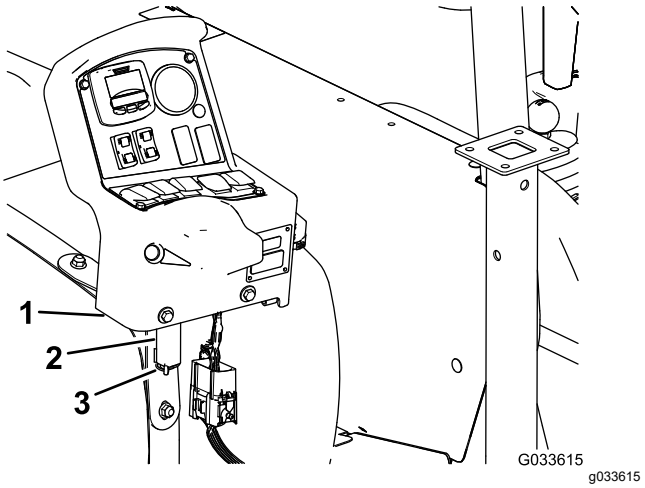

Figure 100

1. Control console
2. Storage bracket (front sprayer-tank strap)
3. Hairpin

8. Assemble the console to the bracket and secure the pivot pin to the bracket with the hairpin (Figure 100).

Installing the Jack Stands

Lifting equipment capacity: 408 kg (900 lb)

1. Align the front jack stand with the jack stand receiver at the front of the tank (Figure 101).

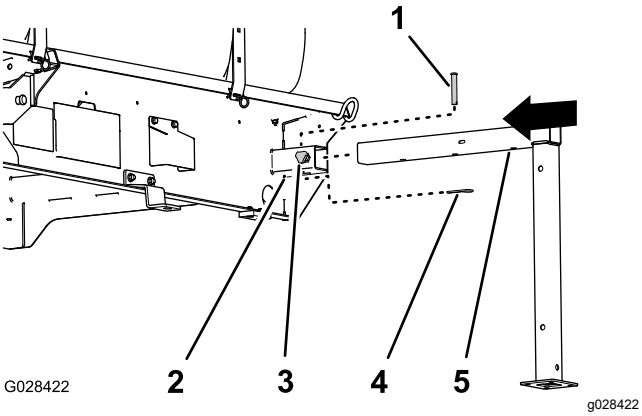

Figure 101

1. Clevis pin (1/2 x 3 inches)
2. Jack-stand receiver
3. Lock knob
4. Hairpin (5/32 x 2-5/8 inches)
5. Front jack stand

2. Insert the jack stand into the receiver until the middle hole in the horizontal jack stand tube is aligned with the hole in the top of the receiver (Figure 101).
3. Insert the clevis pin (1/2 x 3 inches) into the holes in the jack stand and receiver and secure the clevis pin with a hairpin (5/32 x 2-5/8 inches).
4. Thread a lock knob into the receiver and tighten the knob by hand (Figure 101).
5. Align the rear jack stand with the rear jack-stand receiver (Figure 102).

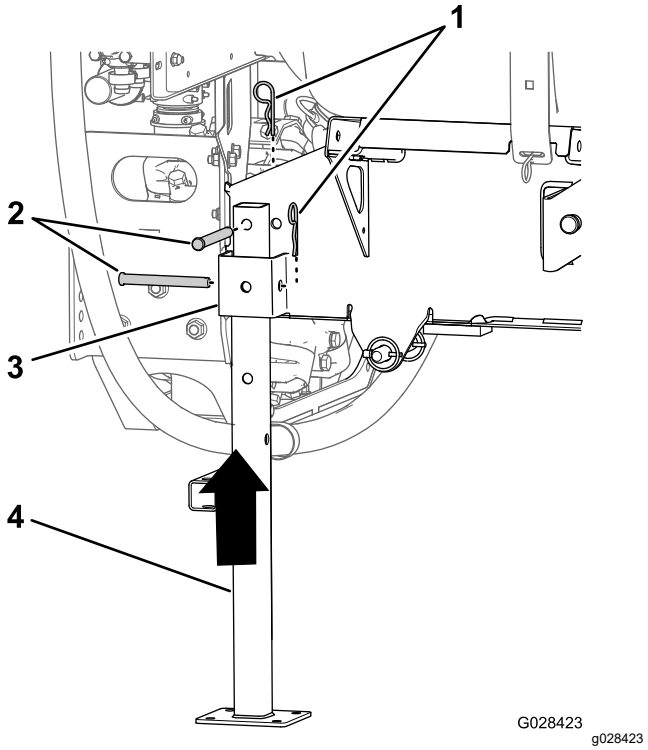

Figure 102

1. Hairpin (5/32 x 2-5/8 inches)
2. Clevis pin (1/2 x 4-1/2 inches)
3. Jack-stand receiver
4. Rear jack stand

6. Align the hole in the top of the jack stand with the hole in the frame of the tank skid (Figure 102)
7. Secure the jack stand to the receiver and the frame with 2 clevis pins (1/2 x 4-1/2 inches) and 2 hairpins (5/32 x 2-5/8 inches) as shown in Figure 102.
8. Repeat steps 1 through 7 for the front and rear jack stands at the other side of the tank skid.

Extending the Jack Stands

Use the jack and front jack stand extension to extend the jack stands.

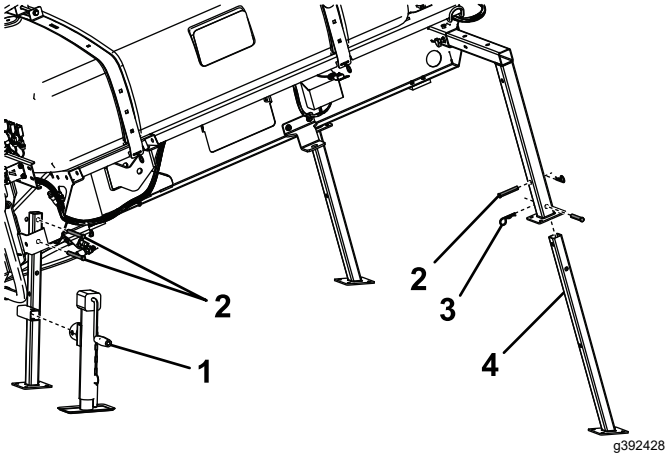

Figure 103

1. Jack
2. Clevis pin
3. Cotter pin
4. Front jack stand extension

Removing the Sprayer Skid

1. Lower the booms to approximately 45° and then pivot them forward (Figure 104).

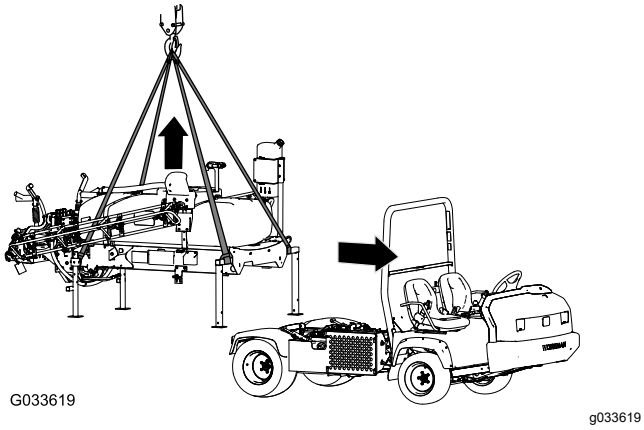

Figure 104

2. Remove the 2 bolts (1/2 x 1-1/2 inches) and 2 locknuts (1/2 inch) that secure the hold down bracket of the tank skid assembly to the bed bracket on the frame at each side of the machine; refer to 13 Lowering the Tank Skid (page 24).
3. Raise the tank skid with the lift cylinders, install the cylinder lock, and perform the following:

   Note: Refer to Raising the Tank Assembly (page 67).

   - For HD- and HDX-Series Workman models with a manual transmission, disconnect the PTO shaft from the transaxle PTO; refer to the installation instructions for the Multi Pro WM Turf Sprayer Finishing Kit, Manual Workman Utility Vehicle.
   - Disconnect the speed sensor wiring; refer to Connecting the Speed Sensor Harness (HD-Series Models with a Manual Transmission) (page 16).
4. Remove the cylinder lock and lower the tank skid with the lift cylinders; refer to Lowering the Tank Assembly (page 68).
5. Attach the lifting equipment to the horizontal tubes of the forward jack stands and the vertical post of the rear jack stands (Figure 104).
6. Lift the tank assembly 7.5 to 10 cm (3 to 4 inches), and remove the lynch pins and clevis pins securing the lift cylinders to the tank assembly.
7. Lift the tank skid from the machine high enough to clear the skid from the machine (Figure 104).
8. Carefully move the vehicle forward and away from the tank skid.
9. Slowly lower the skid tank to the ground.

Troubleshooting

Problem	Possible Cause	Corrective Action
A section does not spray.	1. The electrical connection on the section valve is dirty or disconnected. 2. There is a blown fuse. 3. There is a pinched hose. 4. A section bypass is improperly adjusted. 5. There is a damaged section valve. 6. The electrical system is damaged.	1. Turn the valve off manually. Disconnect the electrical connector on the valve and clean all leads, then connect it. 2. Check the fuses and replace them as necessary. 3. Repair or replace the hose. 4. Adjust the section bypass. 5. Contact your authorized Toro distributor. 6. Contact your authorized Toro distributor.
A section does not turn off.	1. The section valve is damaged.	1. Disassemble the section valve; refer to the section Cleaning the Sprayer Valves. Inspect all the parts and replace any that are damaged.
A section valve is leaking.	1. A seal or valve seat is worn or damaged.	1. Disassemble the valve and replace the seals using the Valve Repair Kit; contact your authorized Toro distributor.
The spray nozzle(s) drip when the section switch(es) is shut off	1. Debris has accumulated between the nozzle body and the check-valve diaphragm.	1. Clean the nozzle body and diaphragm; refer to Cleaning the Nozzle Body and Check-Valve Diaphragm.
A pressure drop occurs when you turn on a boom.	1. The boom bypass valve is improperly adjusted. 2. There is an obstruction in the boom valve body. 3. A nozzle filter is damaged or clogged.	1. Adjust the boom bypass valve. 2. Remove the inlet and outlet connections to the boom valve and remove any obstructions. 3. Remove and inspect all nozzles.

Schematics

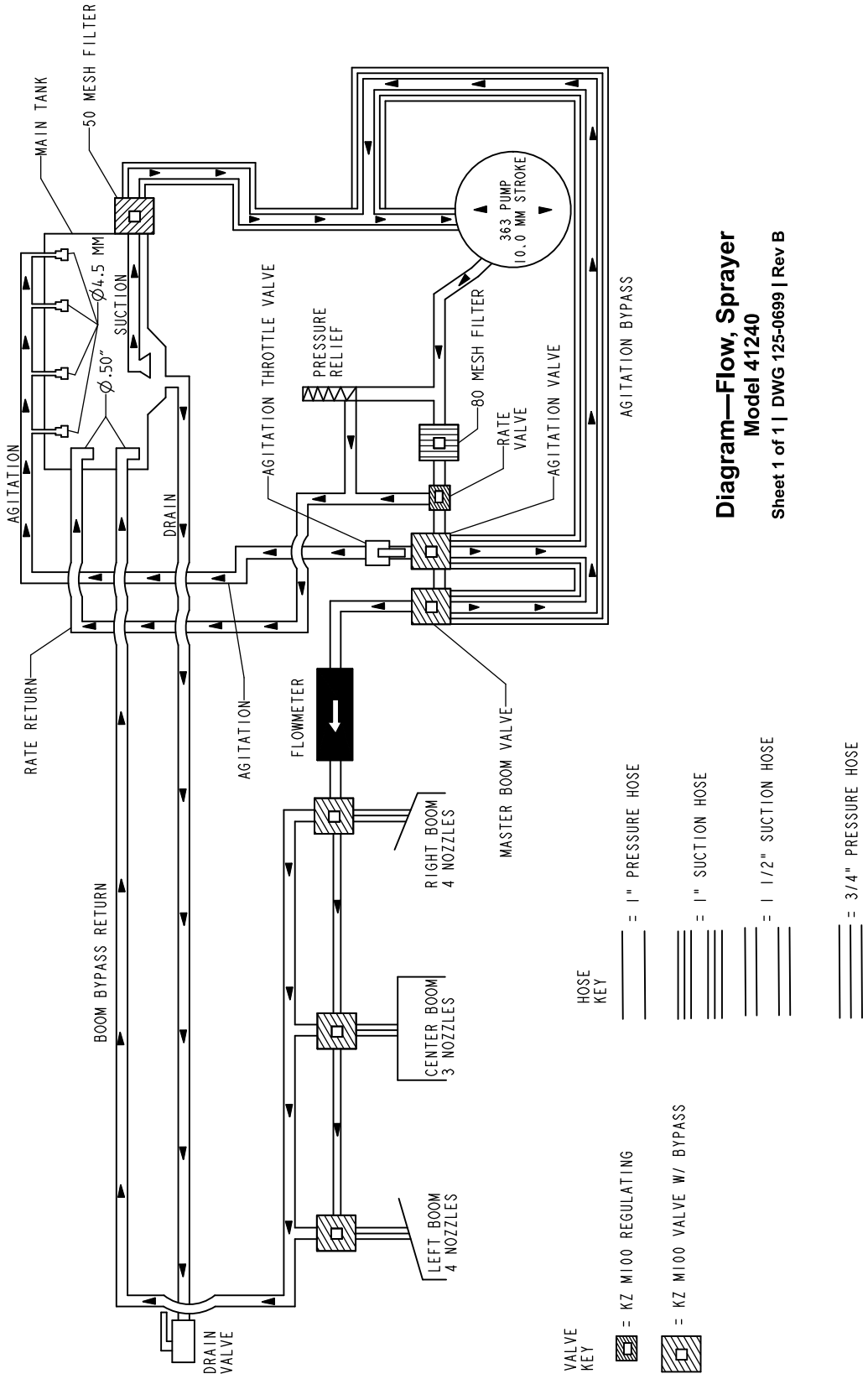

Flow Diagram, Sprayer System (Rev. B)

Notes:

Notes:

TORO®

Count on it.