Form No. 3484-773 Rev A

TORO®

Count on it.

Parts Catalog

Reelmaster®

5510-D Traction Unit

Model No. 03964—Serial No. 422000000 and Up

Register at www.Toro.com.
Original Instructions (EN)

3484-773 A

Ordering Replacement Parts

To order replacement parts, please supply the part number, the quantity, and the description of each part desired.

Understanding Reference Numbers

Each identified part in an illustration has a reference number. The reference number for a part also appears in the parts list, along with other information about the part.

This catalog uses two special reference number formats, one to indicate parts in a service assembly and another to indicate the quantity of a given part in an illustration.

Service Assembly Reference Numbers

Parts in service assemblies have reference numbers in the form a:b. The a represents the reference number of the entire service assembly and the b represents a sequential number unique to each part within the service assembly.

For example, a wheel assembly might be identified by reference number 6, the tire by 6:1, the valve by 6:2, and the wheel by 6:3. When you order the assembly identified by reference number 6, you receive all parts identified by reference numbers 6:1,6:2, and 6:3. However, you may also order any part individually. Reference numbers of this type appear in illustration and in parts lists.

Reference Numbers Indicating Quantity

In an illustration, if a reference number indicates more than one part, the reference number has the form nX y. The n represents the quantity of the part, the X is the multiplication symbol, and the y represents the reference number.

For example, in an illustration, the reference number 2X 37 means that two of the parts identified by reference number 37 are indicated.

Contents

Frame Assembly . . . 6
Platform and Shroud Assembly . . . 8
Pedal Assembly . . . 10
Steering Assembly . . . 12
Steering Tilt Column Assembly No. 106-3622 . . . 14
Steering Valve Assembly No. 106-3621 . . . 15
Control Console Assembly . . . 16
Joystick Bracket Assembly No. 120-5280 . . . 18
Front Axle Assembly . . . 19
Rear Axle Assembly . . . 20
Tie Rod Assembly No. 139-6029 . . . 21
Hub and Spindle Assembly No. 117-8961 . . . 22
No. 1, 4 and 5 Lift Arm Hydraulic Assembly . . . 23
No. 2 and 3 Lift Arm Assembly . . . 25
Seat and Control Arm Wiring Harness Assembly . . . 26
Main Wiring Harness Assembly . . . 27
Wire Harness Assembly No. 122-2912 . . . 28
Battery and Engine Wiring Assembly . . . 29
Gear Pump Assembly . . . 30
Gear Pump Assembly No. 107-4547 . . . 31
Seat Base Assembly . . . 32
Hood Assembly . . . 33
Radiator Assembly . . . 34
Hydraulic Tank Assembly . . . 36
Fuel System Assembly . . . 37
Seat and Roll-Over Protection System Assembly . . . 39
Seat Assembly No. 139-2700 . . . 40
Mechanical Seat Suspension Assembly No. 145-5295 . . . 41
Traction Pump Mounting Assembly . . . 42
Hydraulic Pump Assembly No. 144-2060 . . . 44
Traction Hydraulic Assembly . . . 46
Hydraulic Motor Assembly No. 163-3542 . . . 47
Hydraulic Motor Assembly No. 163-3543 . . . 48
Hydraulic Brake Assembly . . . 49
Brake Release Manifold Assembly No. 139-6046 . . . 50
No. 1, 4 and 5 Reel Drive Hydraulic Assembly . . . 51
Hydraulic Motor Assembly No. 120-6272 . . . 53
Manifold Assembly No. 121-5628 . . . 54
No. 2 and 3 Reel Drive Hydraulic Assembly . . . 55
No. 1, 4 and 5 Lift Arm Hydraulic Assembly . . . 57
Hydraulic Cylinder Assembly No. 163-2624 . . . 58
Hydraulic Cylinder Assembly No. 163-3534 . . . 60
Hydraulic Manifold Block Assembly No. 105-7577 . . . 61
Rear Lift Hydraulic Assembly . . . 62
Steering Hydraulic Assembly . . . 63
Hydraulic Cylinder Assembly No. 110-9035 . . . 65
Engine, Air Cleaner and Drive Shaft Assembly . . . 66
Air Cleaner Assembly No. 106-5277 . . . 68
Drivershaft Assembly No. 144-2053 . . . 69
Crankcase Assembly . . . 70
Oil Pan Assembly . . . 71
Cylinder Head Assembly . . . 72
Gear Case Assembly . . . 73
Cylinder Head Cover Assembly . . . 74

© 2026—The Toro® Company
8111 Lyndale Avenue South
Bloomington, MN 55420

Contact us at www.Toro.com.
Printed in the USA.
All Rights Reserved

Contents (continued)

Dipstick and Guide Assembly 75
Main Bearing Case Assembly 76
Camshaft and Idle Gear Assembly 77
Piston and Crankshaft Assembly 78
Flywheel Assembly 79
Fuel Camshaft and Governor Shaft Assembly 80
Idle Apparatus Assembly 81
Injection Pump Assembly 82
Governor Assembly 83
Speed Control Plate Assembly 84
Nozzle Holder and Glow Plug Assembly 85
Nozzle Holder Component Assembly 86
Alternator and Pulley Assembly 87
Alternator Components Assembly 88
Starter Assembly 89
Starter Component Part Assembly No. 111-7496 90
Thermostat Assembly 91
Water Pump Assembly 92
Valve and Rocker Arm Assembly 93
Intake and Exhaust Manifold Assembly 94
Muffler Gasket and Operator Manual Assembly 95
Attachments and Accessories 96

Frame Assembly

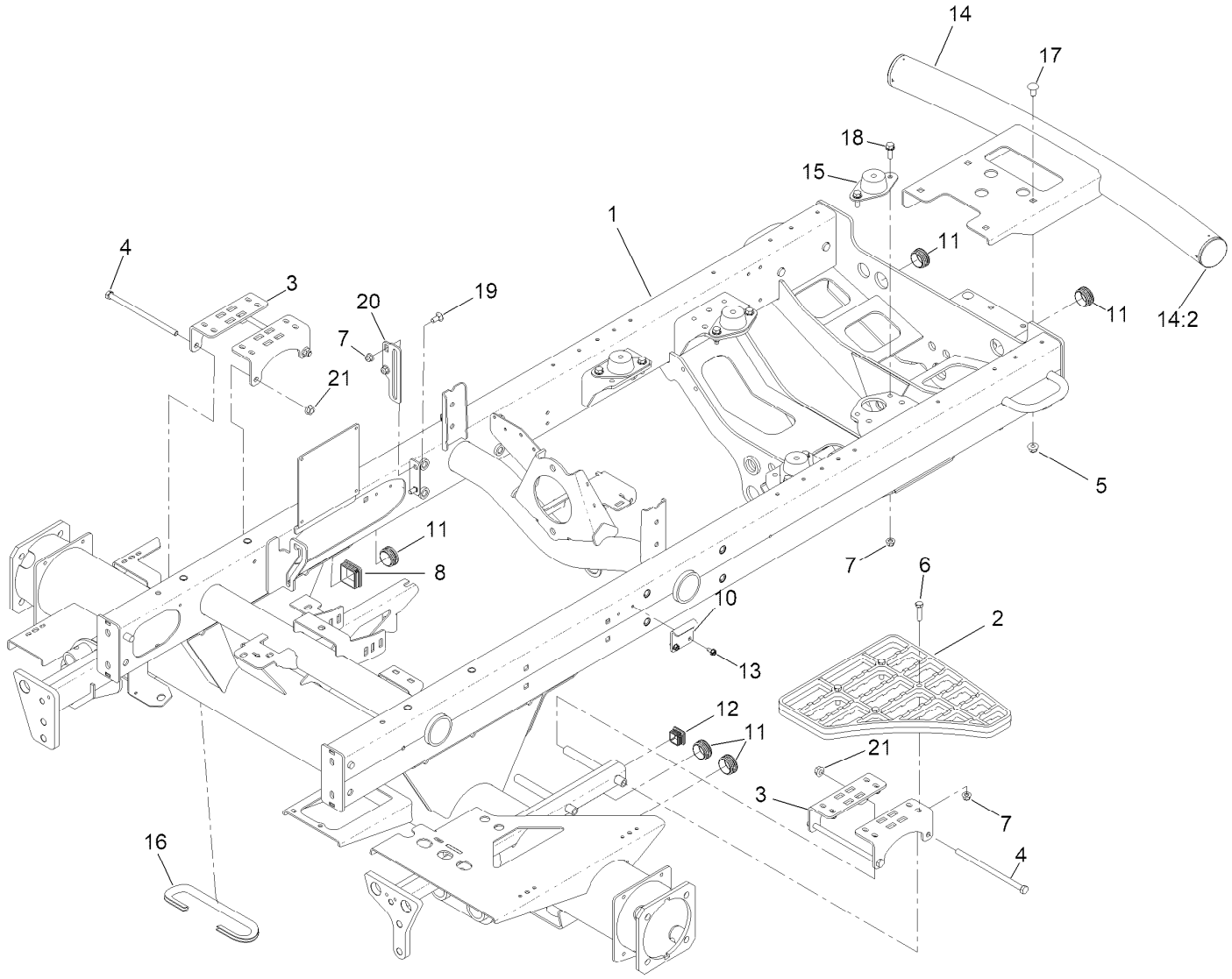

Frame Assembly (continued)

Ref.	Part Number	Qty.	Description
1	145-2469	1	Frame ASM
2	110-9041	1	Step-Aluminum
3	127-2697-01	4	Bracket-Step
4	323-36	4	Screw-HH
5	119-4042	4	Nut-HF, NI
6	322-17	4	Screw-HH
7	119-4041	14	Nut-HF
8	95-9495	1	Cap
10	110-8972	1	Hook-Latch
11	110-9012	5	Caplug
12	110-9013	1	Caplug
13	32104-17	2	Screw-HWH
14	147-3550	1	Bumper ASM
14:2	2410-42	2	Cap-End
15	120-6274	4	Mount-Engine
16	145-2520	1	Trim-Brake Hose
17	3231-21	4	Screw-CARR
18	3234-29	8	Screw-HHF
19	3230-1	2	Bolt-CARR
20	108-7584-01	1	Plate-Guide, Rod
21	32128-21	4	Nut-HF Lock

Platform and Shroud Assembly

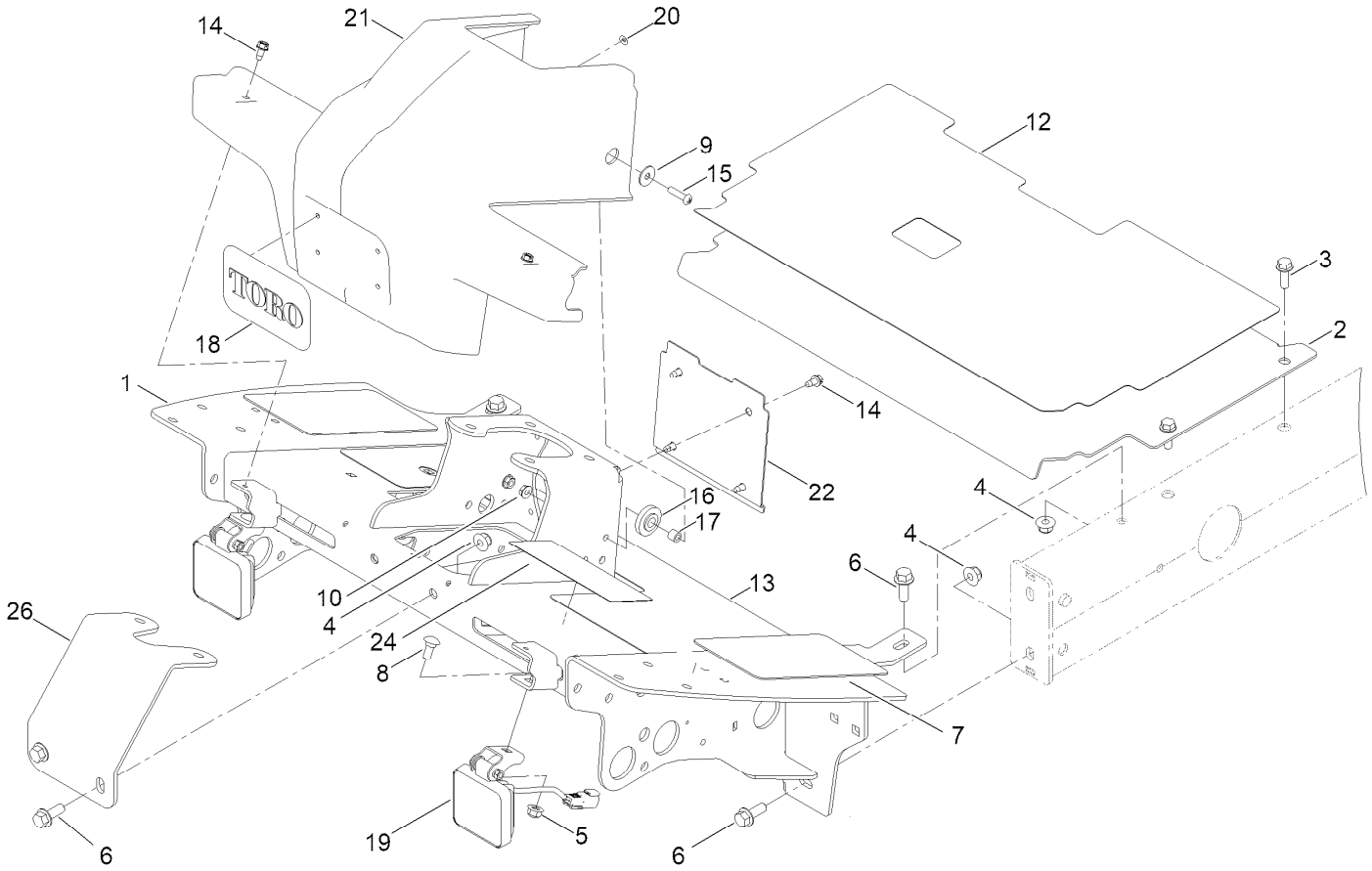

Platform and Shroud Assembly (continued)

Ref.	Part Number	Qty.	Description
1	145-2490-01	1	Platform ASM
2	164-1867-01	1	Plate-Floor
3	3234-17	4	Screw-HHF
4	119-4042	6	Nut-HF, NI
5	119-4041	2	Nut-HF
6	3234-11	6	Screw-HHF
7	125-2910	2	Tread-Floor, Side
8	3230-1	2	Bolt-CARR
9	87-6630	2	Washer-Plain
10	32128-33	2	Nut-HF
12	164-6056	1	Tread-Service Panel
13	145-2510	1	Tread-Floor Board
14	32104-17	6	Screw-HWH
15	3274-65	2	Screw-HSBH
16	240-11	2	Bushing-Flange
17	66-8010	2	Spacer
18	93-6028	1	Plate-Logo
19	145-2598	2	Light-Work, LED
20	138-6996	4	Nut-Push
21	110-0944	1	Shroud-Platform
22	110-0947-03	1	Plate-Cover
24	133-2930	1	Decal-Danger
26	110-8876-0P	1	Brace-Column

Pedal Assembly

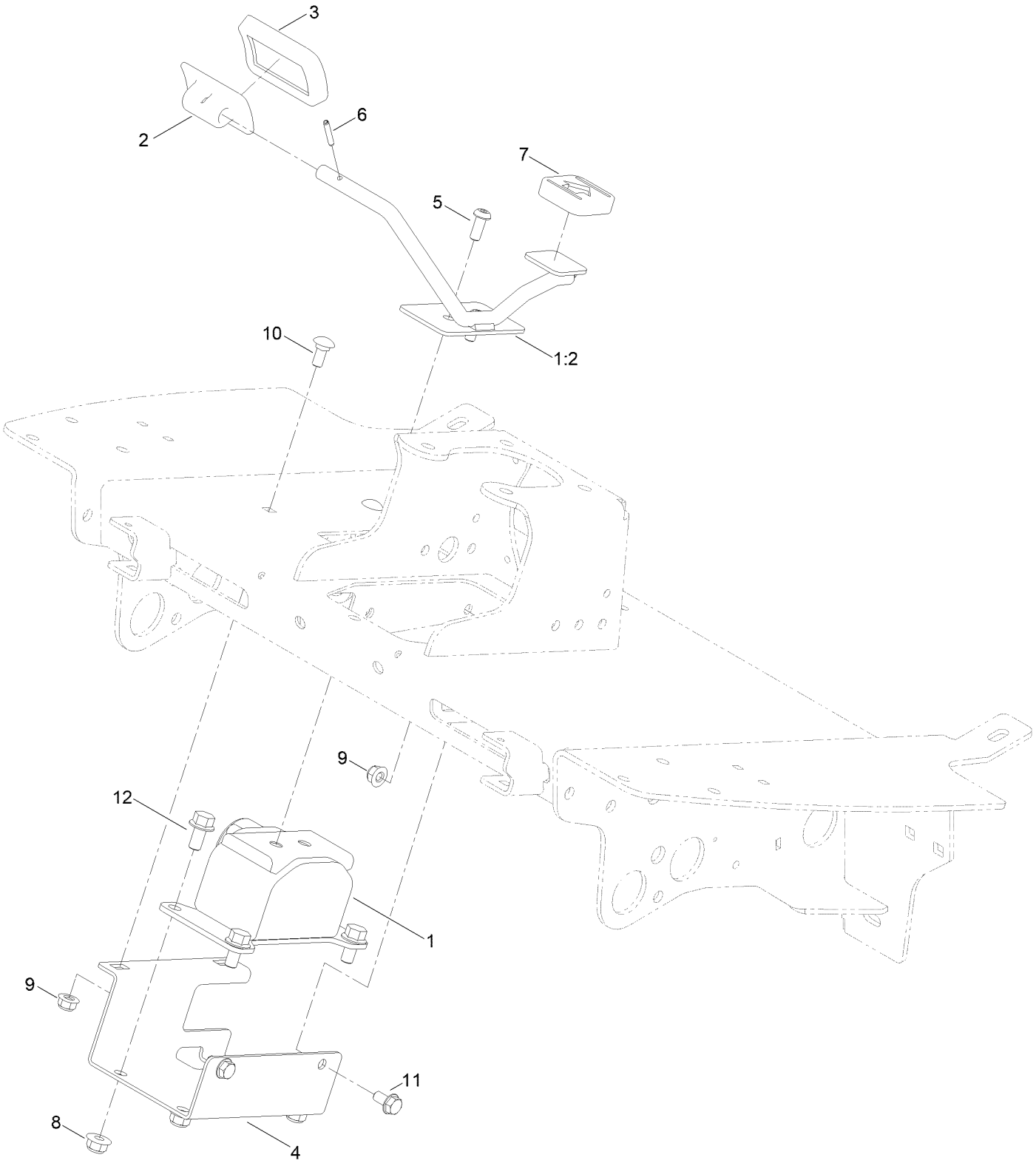

Pedal Assembly (continued)

Ref.	Part Number	Qty.	Description
1	145-2545	1	E-Pedal ASM
1:2	145-2521	1	Pedal ASM
2	117-9507	1	Pedal-Accelerator
3	74-9100	1	Pad-Pedal, Forward
4	145-2489-0P	1	Bracket-Pedal, Mount
5	3274-96	2	Screw-HSBH
6	32121-45	1	Pin-Spring
7	74-9110	1	Pad-Pedal, Reverse
8	119-4042	4	Nut-HF, NI
9	119-4041	4	Nut-HF
10	3230-1	2	Bolt-CARR
11	3234-7	2	Screw-HHF
12	3234-1	4	Screw-HHF

Steering Assembly

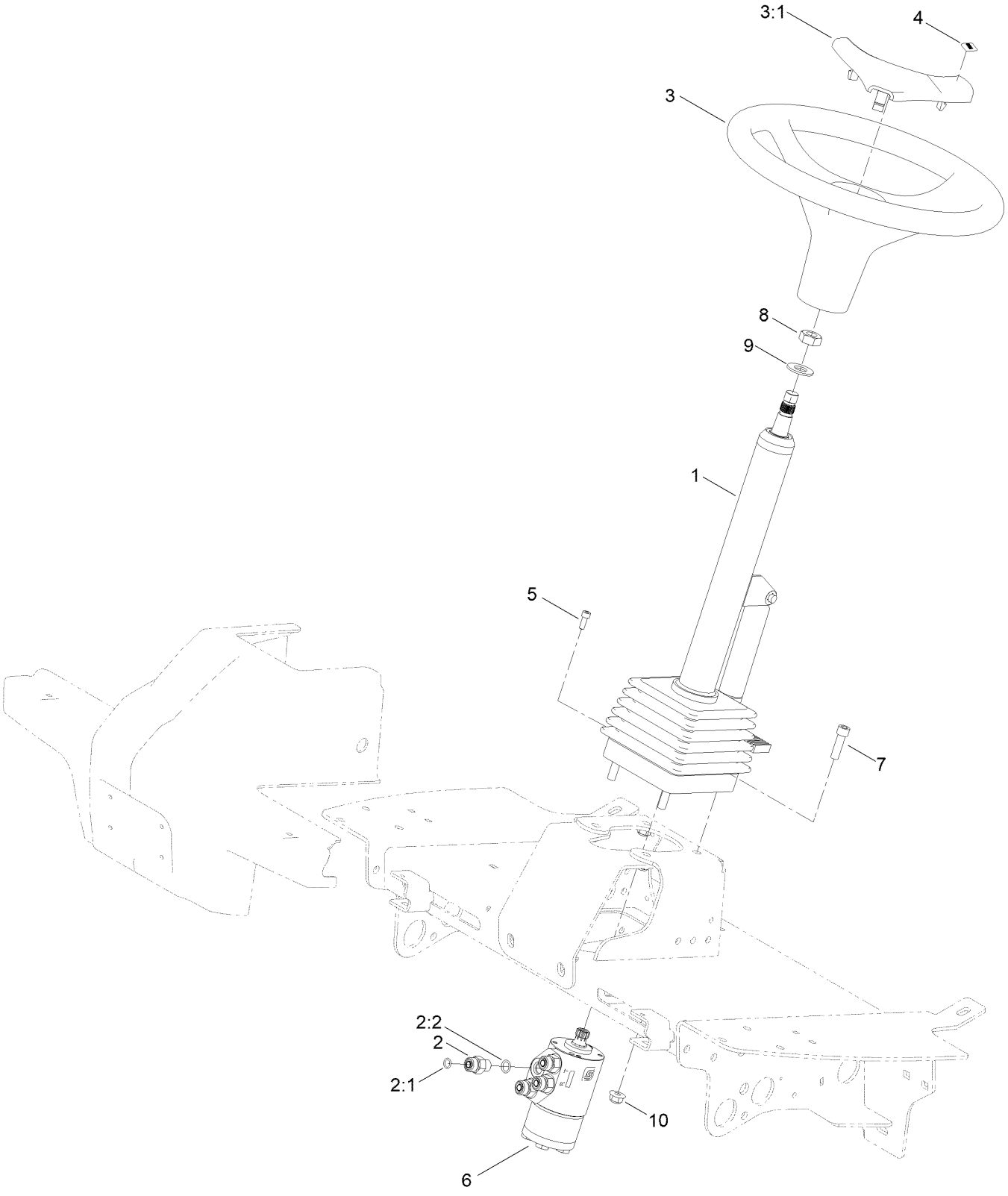

Steering Assembly (continued)

Ref.	Part Number	Qty.	Description
1	106-3622	1	Steering Tilt Column ASM
2	340-2	4	Fitting-Straight
2:1	237-22	1	O-Ring
2:2	237-42	1	O-Ring
3	98-1471	1	Wheel-Steering
3:1	98-1468	1	Cover-Wheel, Steering
4	98-1459	1	Decal
5	105-2409	4	Screw-HSH
6	106-3621	1	Steering Valve ASM
7	3274-1	4	Screw-HSH
8	3296-33	1	Nut-Lock, NI
9	3256-27	1	Washer-Flat
10	119-4042	4	Nut-HF, NI

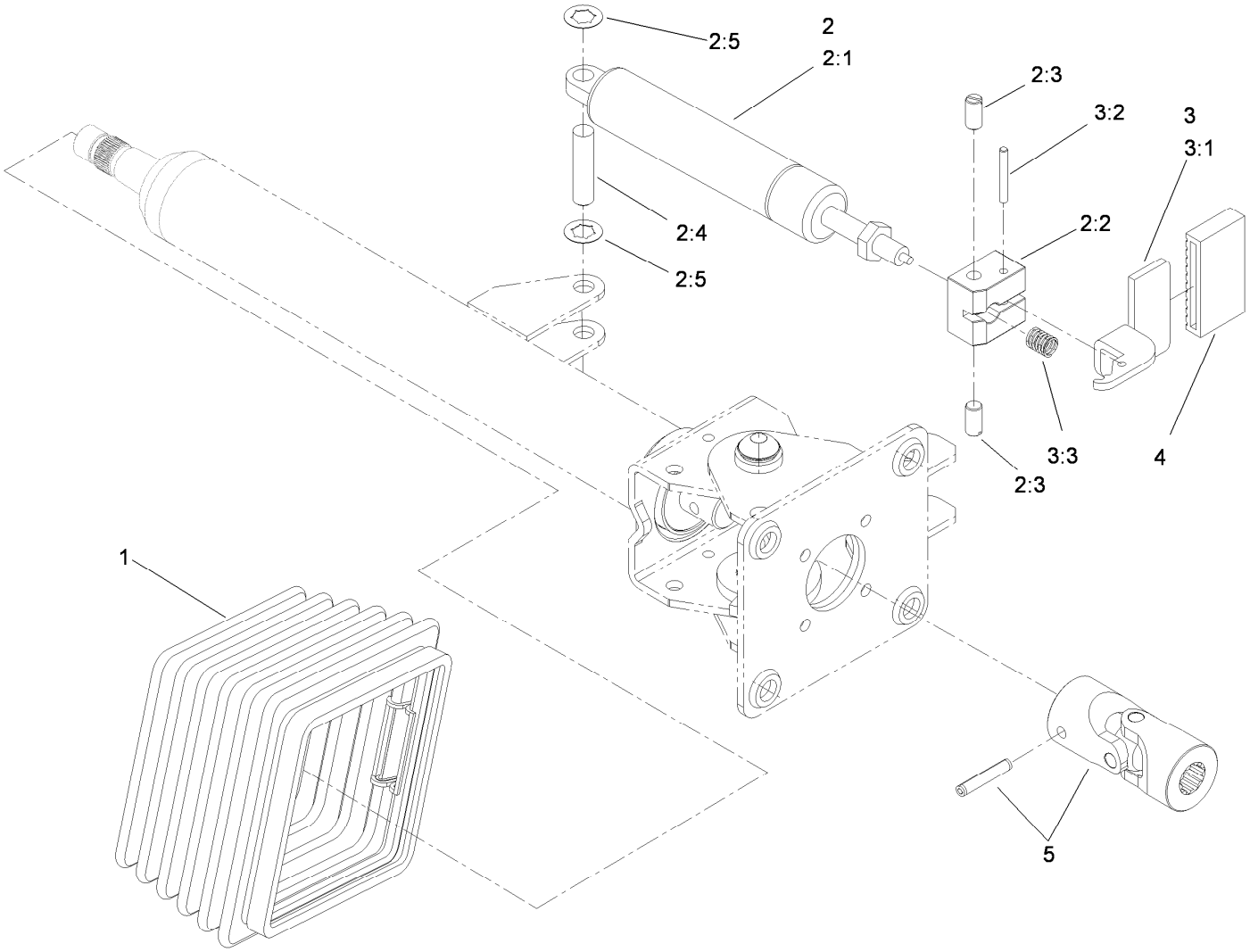

Steering Tilt Column Assembly No. 106-3622

Ref.	*Part Number*	*Qty.*	*Description*
1	110-6462	1	Bellows-Rubber
2	110-6463	1	Cylinder Service Kit
2:1		1	Cylinder-Gas ●
2:2		1	Block-Pedal ●
2:3		2	Bolt ●
2:4		1	Pin ●
2:5		2	Washer-Lock ●
3	110-6464	1	Pedal Service Kit
3:1		1	Pedal ●
3:2		1	Pin ●
3:3		1	Spring ●
4	110-6465	1	Cover-Pedal
5	120-6256	1	Universal Joint Kit

● Not serviced separately

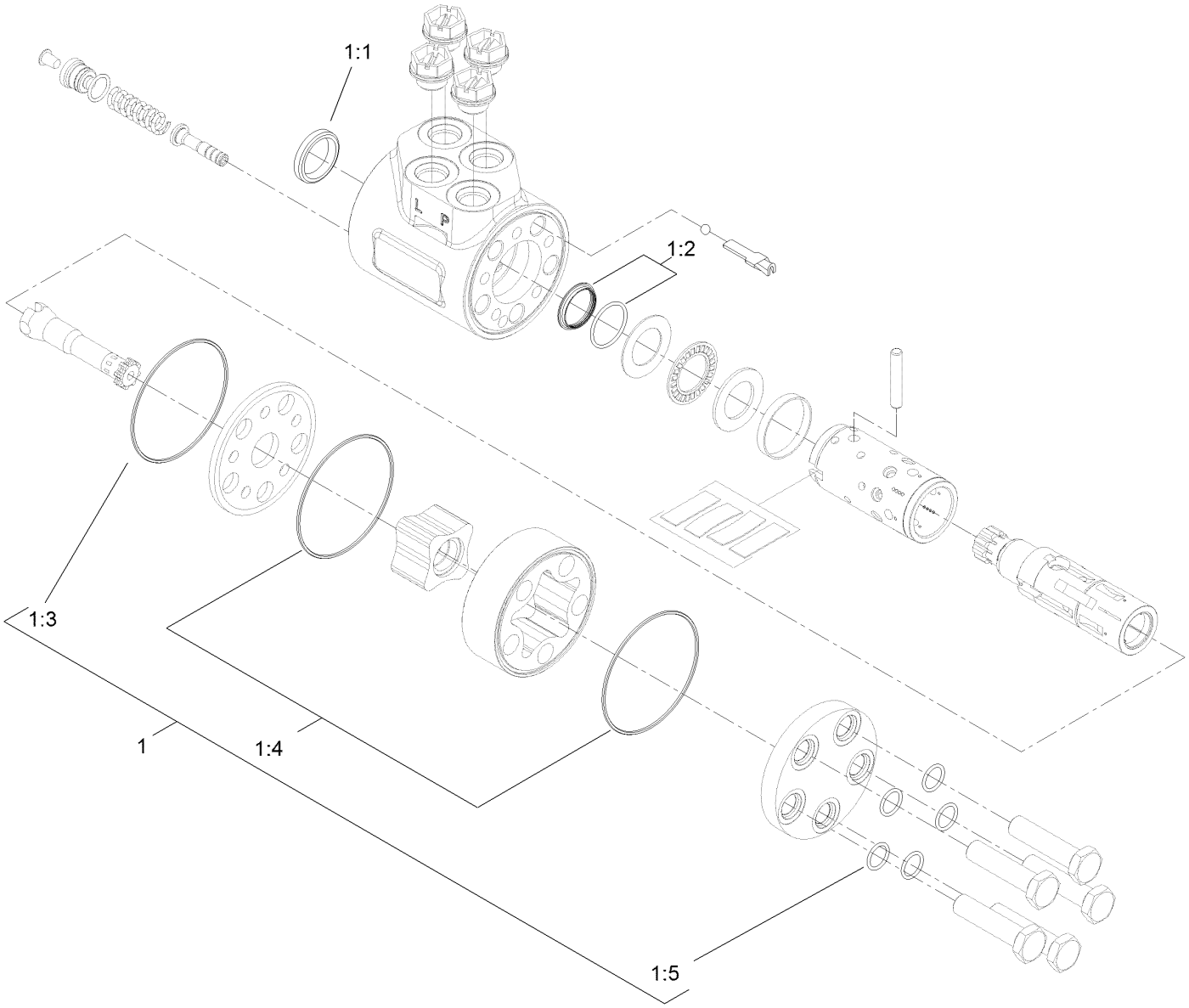

Steering Valve Assembly No. 106-3621

Ref.	*Part Number*	*Qty.*	*Description*
1	106-6716	1	Seal Kit
1:1		1	Ring-Seal, Dust ●
1:2		1	Seal-Shaft ●
1:3		1	O-Ring ●
1:4		2	O-Ring ●
1:5		5	O-Ring ●

● Not serviced separately

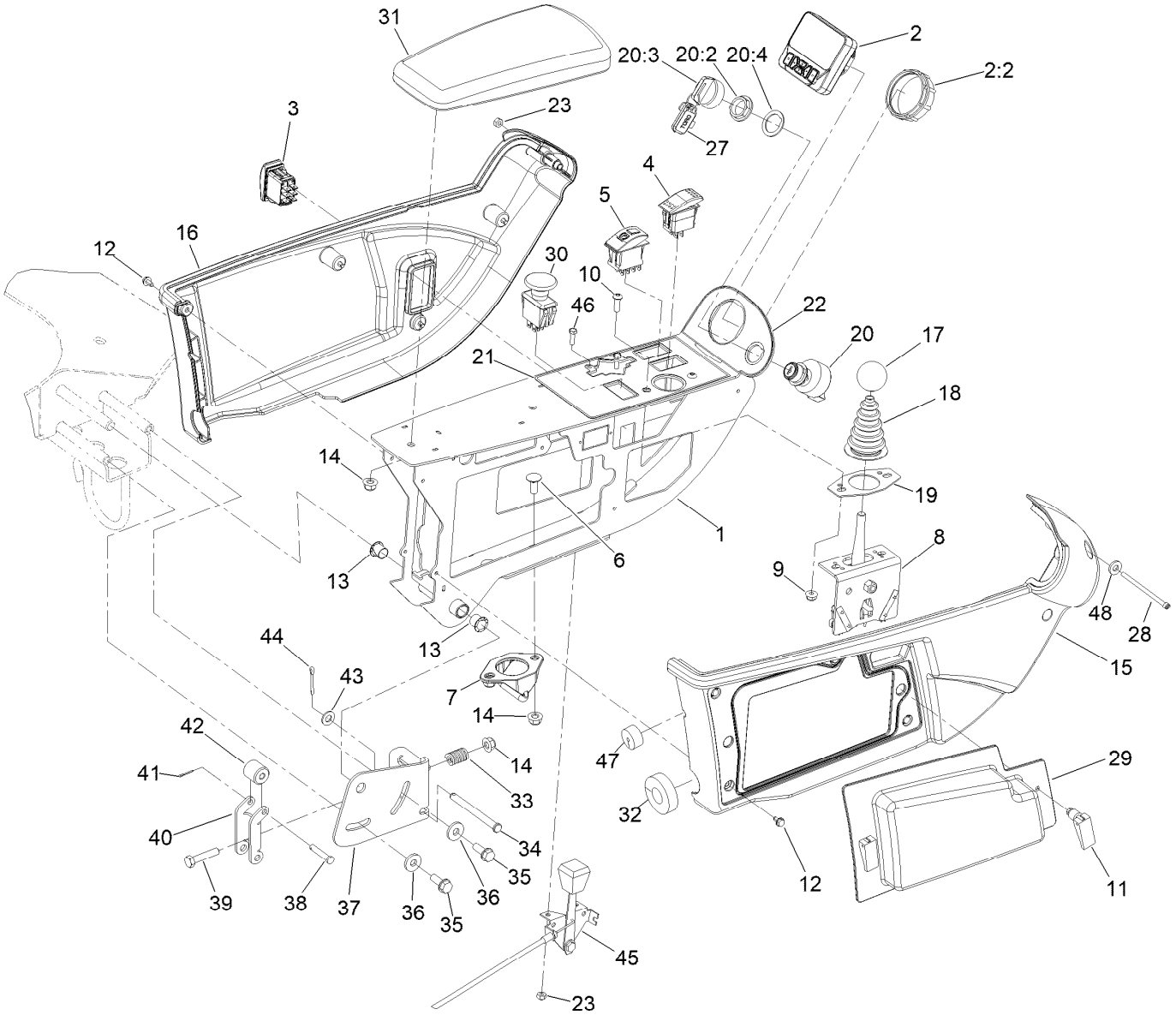

Control Console Assembly

Ref.	Part Number	Qty.	Description
1	145-2474-03	1	Frame-Arm, Control
2	161-1700	1	Display-LCD
2:2	161-1723	1	Nut-Display
3	95-8999	1	Switch-Rocker, On-None-On
4	114-3329	1	Switch-Rocker
5	111-2254	1	Switch-Rocker, On-None-On
6	137-3061	2	Bolt-CARR
7	125-1938	1	Latch
8	120-5280	1	Bracket-Joystick
9	104-7201	2	Nut-HF, NI
10	3274-69	2	Screw-HSBH
11	74-5950	2	Latch-Swell
12	104-2065	10	Screw-HWH
13	256-257	2	Bushing-Nyliner
14	119-4041	5	Nut-HF
15	108-7605	1	Cover-RH
16	108-7604	1	Cover-LH
17	233-42	1	Knob
18	93-5961	1	Boot-Lever

Ref.	Part Number	Qty.	Description
19	112-9181	1	Plate-Boot
20	106-5269	1	Ignition Switch ASM
20:2	108-8660	1	Nut-Mounting
20:3	106-5270	1	Ignition Key Set
20:4	108-8659	1	Washer-Backup
21	145-2484	1	Decal-Control Panel
22	120-4158	1	Decal-Console, Upper
23	3296-2	3	Nut-Lock, NI
27	99-8970	1	Key-Latch, Hood
28	161-8374	1	Screw-HSH
29	114-0446	1	Panel-Access
30	93-9999	1	Switch-PTO
31	108-7602	1	Rest-Arm
32	145-2594	1	Seal-Foam
33	110-5331	1	Spring-Compression
34	283-88	1	Pin-Clevis
35	32144-41	2	Screw-Taptite
36	4-2390	2	Washer-Flat
37	110-5313-03	1	Bracket-Retainer
38	283-73	1	Pin-Clevis
39	322-7	1	Screw-HH

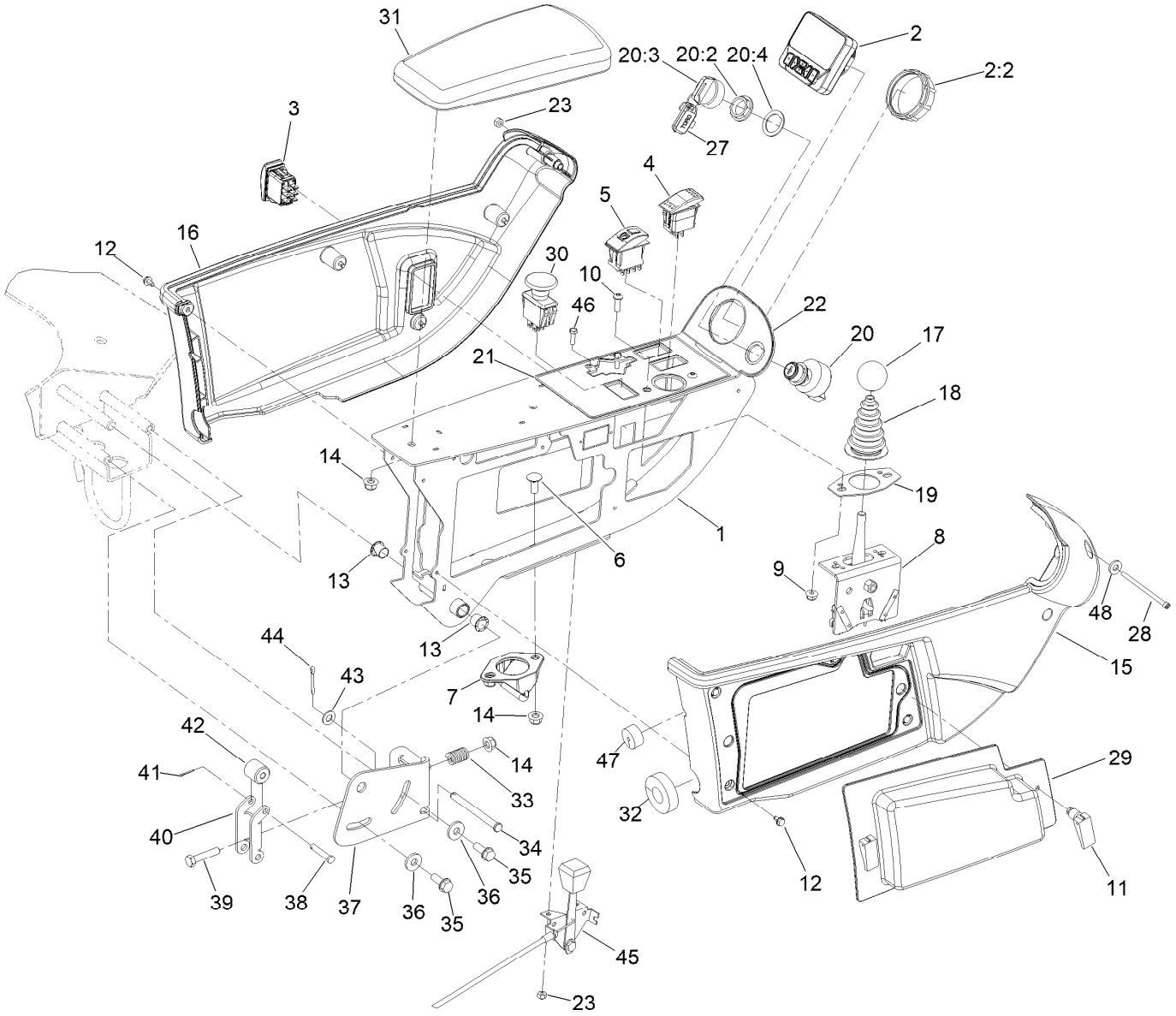

Control Console Assembly (continued)

Ref.	Part Number	Qty.	Description
40	110-5314	1	Latch
41	3272-1	1	Pin-Cotter
42	110-8856	1	Spacer
43	3256-23	1	Washer-Plain
44	3272-11	1	Pin-Cotter

Ref.	Part Number	Qty.	Description
45	133-2929	1	Control-Throttle
46	3290-134	2	Screw
47	110-8911	1	Seal-Foam
48	3256-51	1	Washer-Flat

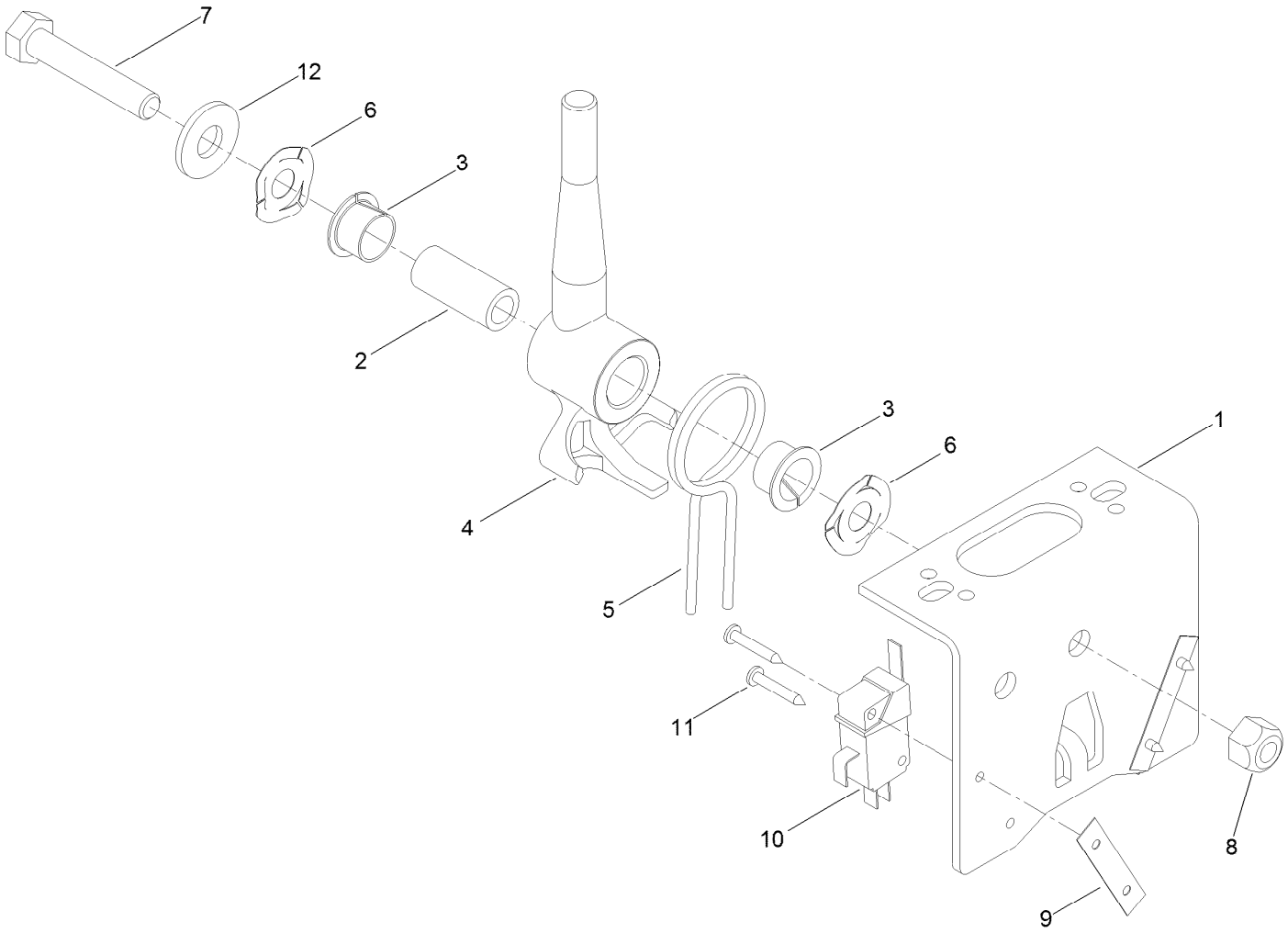

Joystick Bracket Assembly No. 120-5280

Ref.	*Part Number*	*Qty.*	*Description*
1	115-5357-03	1	Bracket-Joystick
2	106-4192	1	Spacer
3	93-5547	2	Bushing-Nylon
4	119-3540	1	Hub-Pivot, Joystick
5	105-8289	1	Spring-Torsion
6	106-4193	2	Washer-Finger, Spring
7	322-9	1	Screw-HH
8	3296-29	1	Nut-Lock, NI
9	3290-354	2	Nut-Speed
10	108-6496	2	Switch (W/Boot)
11	95-3003	4	Screw-PPHTF
12	3256-3	1	Washer-Flat

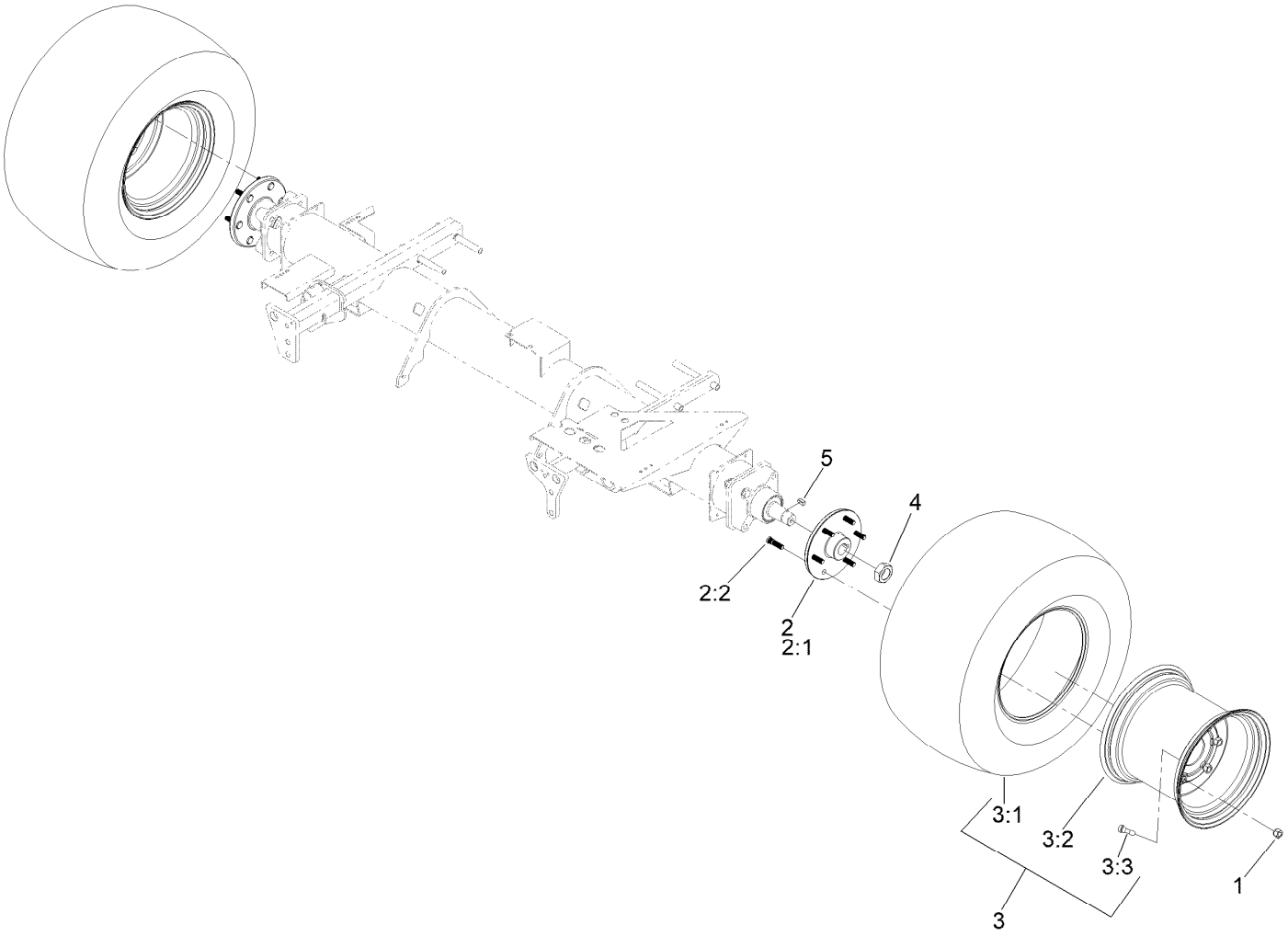

Front Axle Assembly

Ref.	*Part Number*	*Qty.*	*Description*
1	139-2564	12	Nut-Lug
2	144-2058	2	Hub ASM (1.50)
2:1	136-7971	1	Hub-Wheel
2:2	114-3918	6	Stud-Wheel
3	139-6048	2	Tire ASM
3:1	133-2724	1	Tire
3:2	139-6049	1	Wheel
3:3	232-27	1	Stem-Valve
4	117-3290	2	Nut-Hex
5	117-5198	2	Key-Square

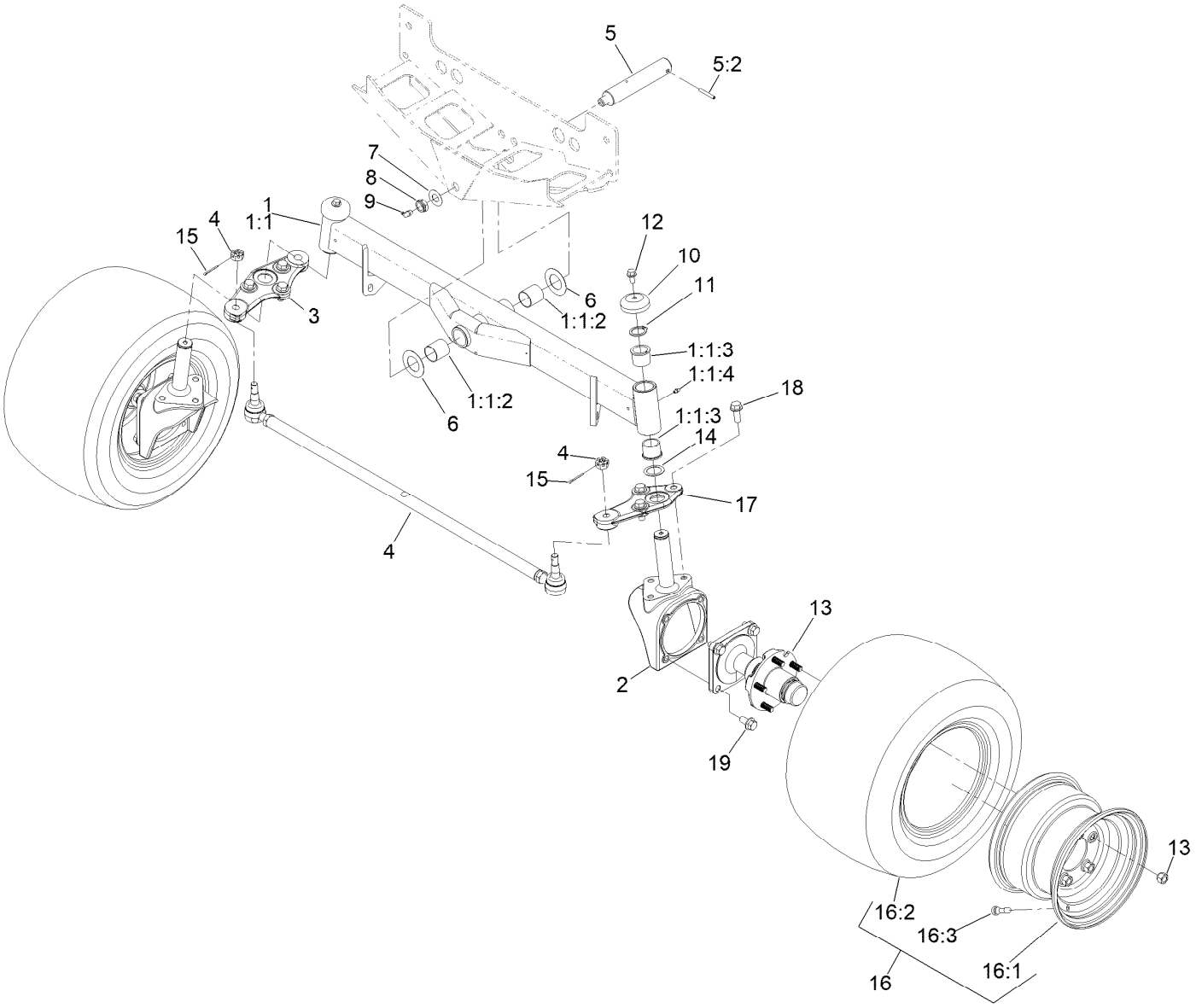

Rear Axle Assembly

Ref.	Part Number	Qty.	Description
1	107-4546-03	1	Axle ASM
1:1		1	Axle ●
1:1:2	99-6964	2	Bushing-Axle
1:1:3	104-0015	4	Bushing-Flange
1:1:4	302-5	2	Fitting-Grease
2	161-5128	2	Housing-Motor
3	140-3142	1	Link-Drag, RH
4	139-6029	1	Tie Rod ASM
5	140-6101	1	Pin ASM-Axle Pivot
5:2	32121-32	1	Pin-Roll
6	99-8432	2	Washer-Thrust
7	71-4540	1	Washer-Thrust
8	3296-15	1	Nut-Lock, NI
9	302-33	1	Fitting-Grease

Ref.	Part Number	Qty.	Description
10	69-8890	2	Cap-Spindle
11	32151-77	2	Ring-Retaining, External
12	3234-1	2	Screw-HHF
13	117-8961	2	Hub And Spindle ASM
14	76-2980	2	Washer-Thrust
15	3272-12	2	Pin-Cotter
16	117-0281	2	Rim And Tire ASM
16:1	117-0280	1	Rim
16:2	117-5125	1	Tire
16:3	232-27	1	Stem-Valve
17	140-3144	1	Link-Drag, LH
18	3234-38	6	Screw-HHF
19	3234-6	8	Screw-HHF

● Not serviced separately

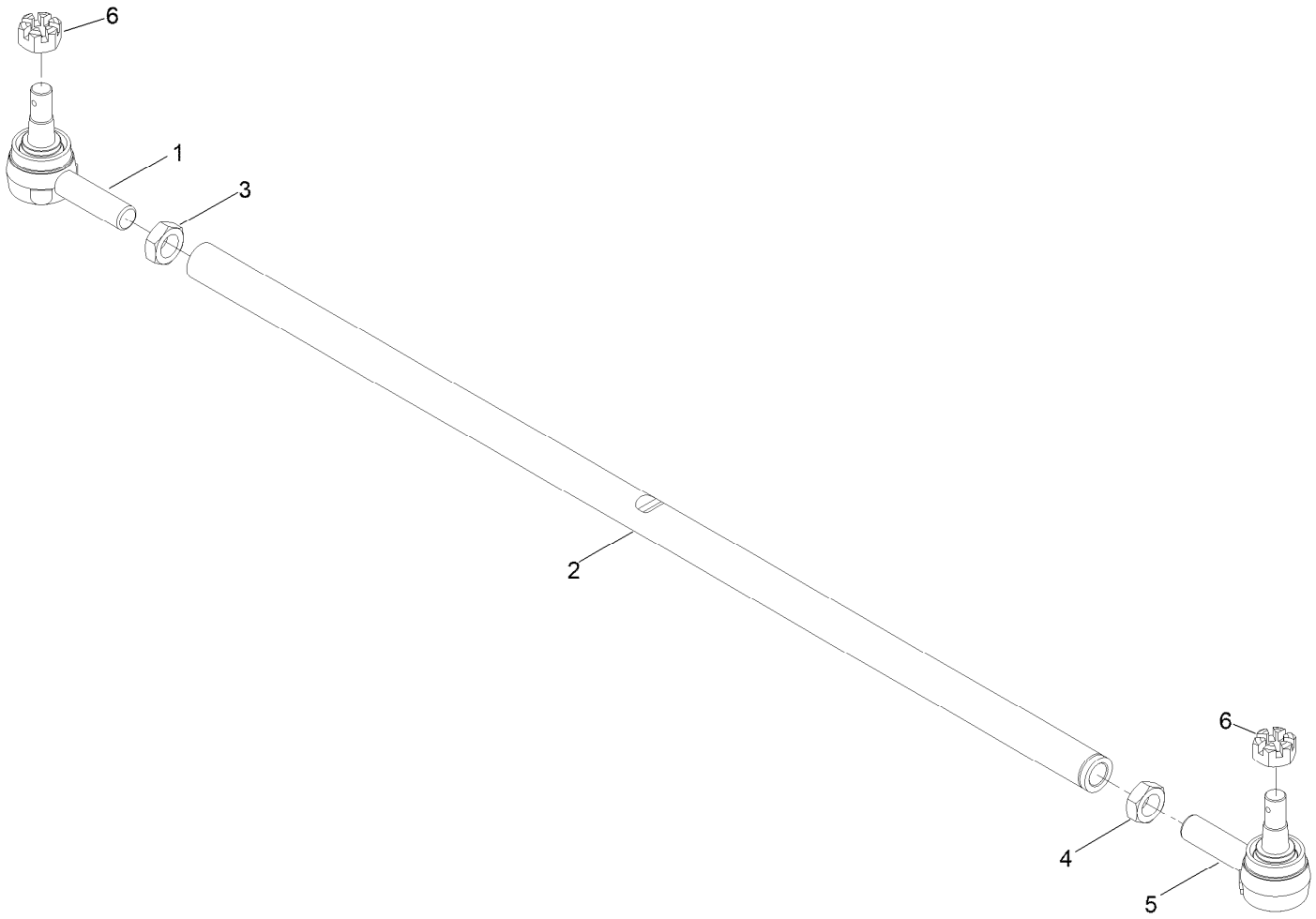

Tie Rod Assembly No. 139-6029

Ref.	*Part Number*	*Qty.*	*Description*
1	144-3901	1	End-Rod, Tie
2	139-6030	1	Rod-Tie
3	84-5300	1	Nut-Jam
4	110-5337	1	Nut-Jam
5	144-3902	1	End-Rod, Tie
6	140-6135	2	Nut-Hex, Slotted

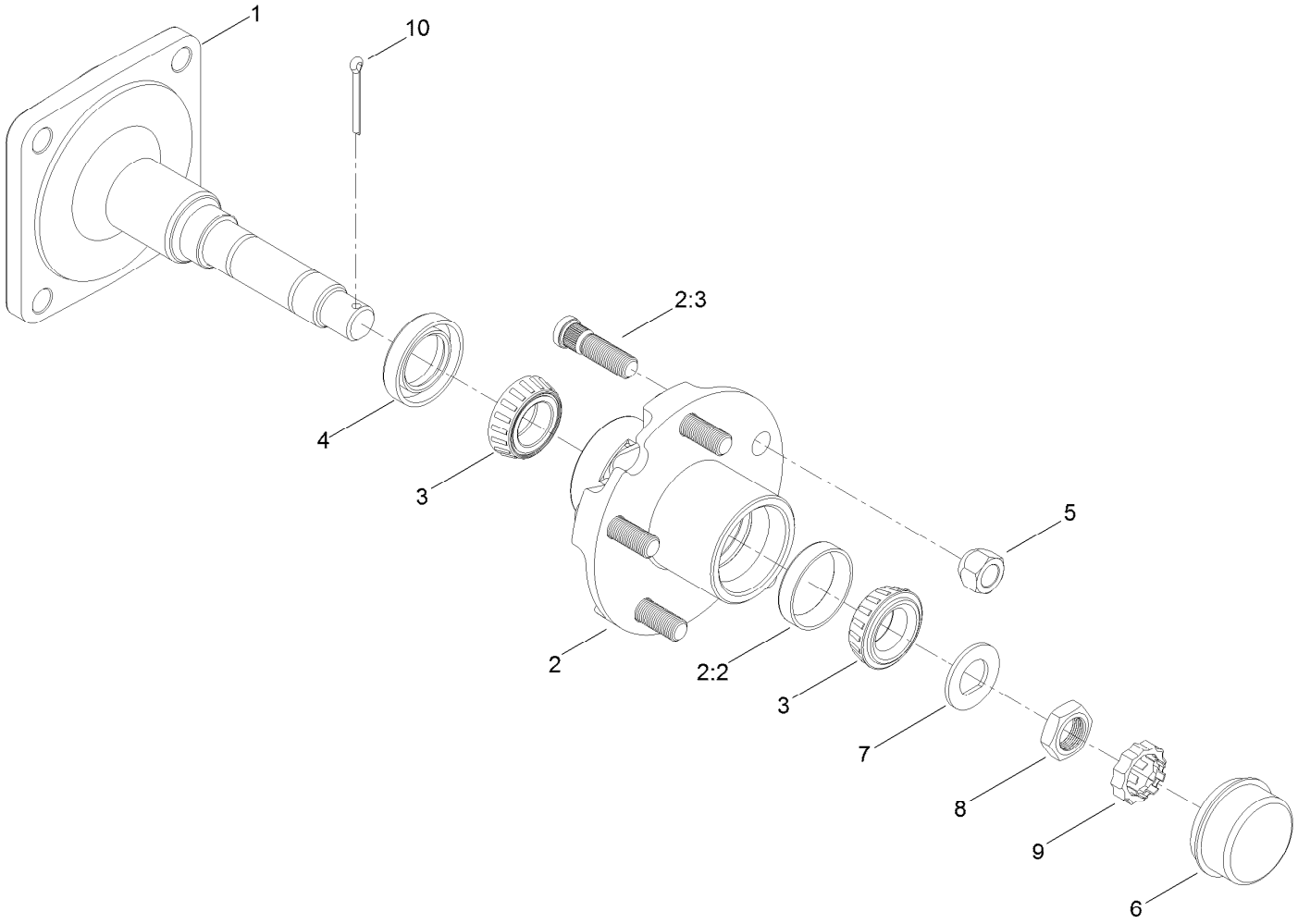

Hub and Spindle Assembly No. 117-8961

Ref.	*Part Number*	*Qty.*	*Description*
1	117-8958	1	Spindle
2	117-8963	1	Hub ASM
2:2	254-72	2	Bearing-Cup, Tapered
2:3	114-3918	5	Stud-Wheel
3	254-94	2	Bearing-Cone, Tapered
4	112-1690	1	Seal-Oil
5	139-2564	5	Nut-Lug
6	241-119	1	Cap-Dust
7	117-8259	1	Washer-Spindle
8	117-8260	1	Nut
9	93-0307	1	Nut-Lock, Retainer
10	3272-18	1	Pin-Cotter

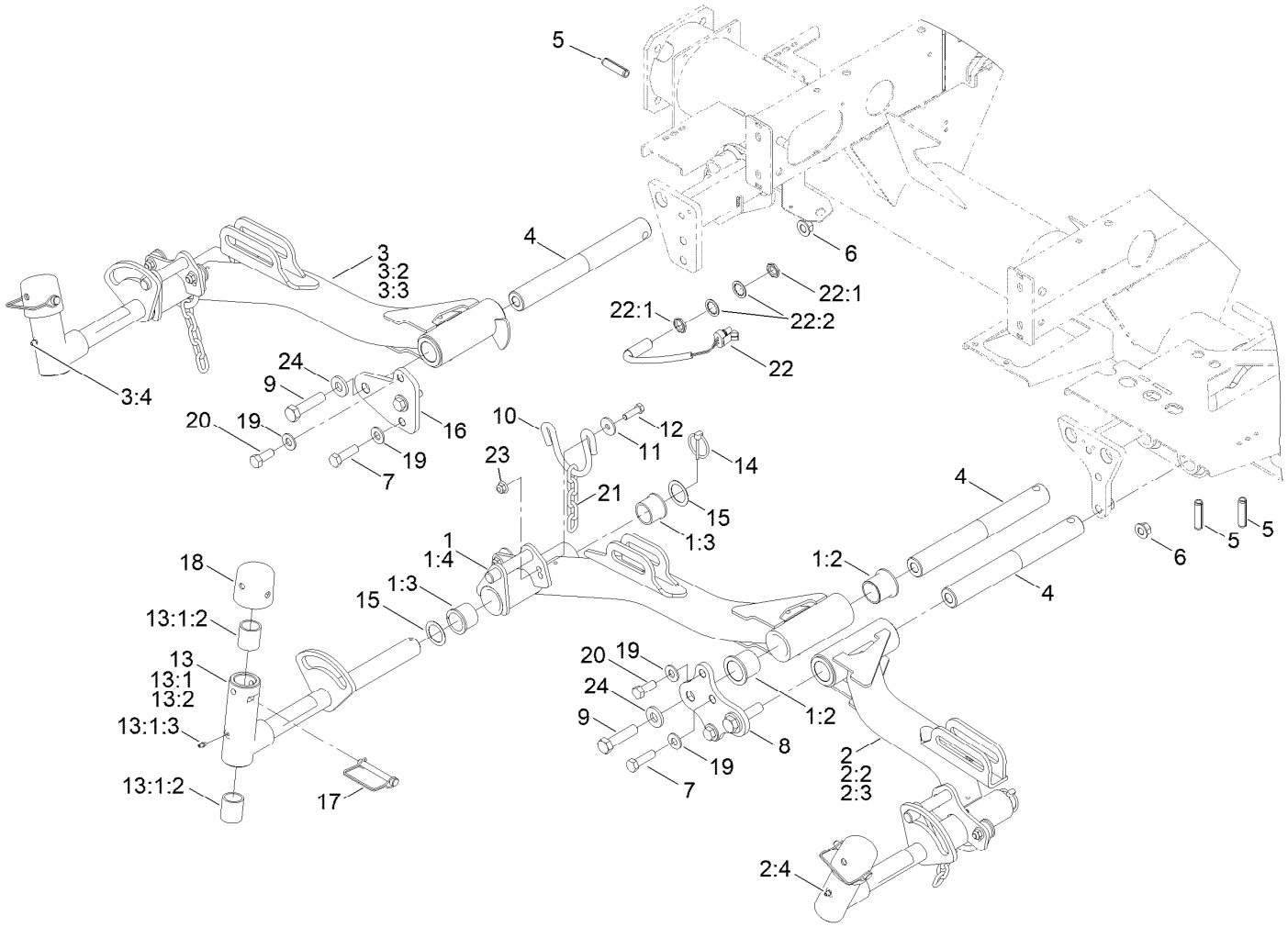

No. 1, 4 and 5 Lift Arm Hydraulic Assembly

Ref.	Part Number	Qty.	Description
1	133-2911	1	Lift Arm ASM #1
1:2	69-6470	2	Bushing-Caster
1:3	104-0015	2	Bushing-Flange
1:4	302-5	2	Fitting-Grease
2	133-2914	1	Lift Arm ASM #4
2:2	69-6470	2	Bushing-Caster
2:3	104-0015	2	Bushing-Flange
2:4	302-5	2	Fitting-Grease
3	133-2915	1	Lift Arm ASM #5
3:2	69-6470	2	Bushing-Caster
3:3	104-0015	2	Bushing-Flange
3:4	302-5	2	Fitting-Grease
4	117-0208	3	Shaft-Pivot, Liftarm
5	32121-122	3	Pin-Roll
6	139-1689	4	Nut-HF
7	325-7	4	Screw-HH
8	117-5154-01	1	Plate-Bridge 1 And 4
9	327-7	3	Screw-HH

Ref.	Part Number	Qty.	Description
10	110-0922	3	Hoop-Chain
11	63-8410	6	Washer
12	323-7	6	Screw-HH
13	138-1248	3	Pivot Yoke ASM
13:1		1	Yoke-Pivot ●
13:1:2	121-3187	2	Bushing
13:1:3	302-5	1	Fitting-Grease
13:2	110-9642	1	Decal-Warning
14	92-1298	3	Pin-Lynch
15	76-2980	6	Washer-Thrust
16	117-5153-01	1	Plate-Bridge 5
17	107-7400	3	Pin-Lynch
18	107-4027	3	Cap
19	87-7270	6	Washer-Thrust
20	325-5	2	Screw-HH
21	84-2451	3	Chain-Straight, 5 Link
22	115-5300	1	Proximity Sensor ASM
22:1	117-3207	2	Nut-Hex

● Not serviced separately

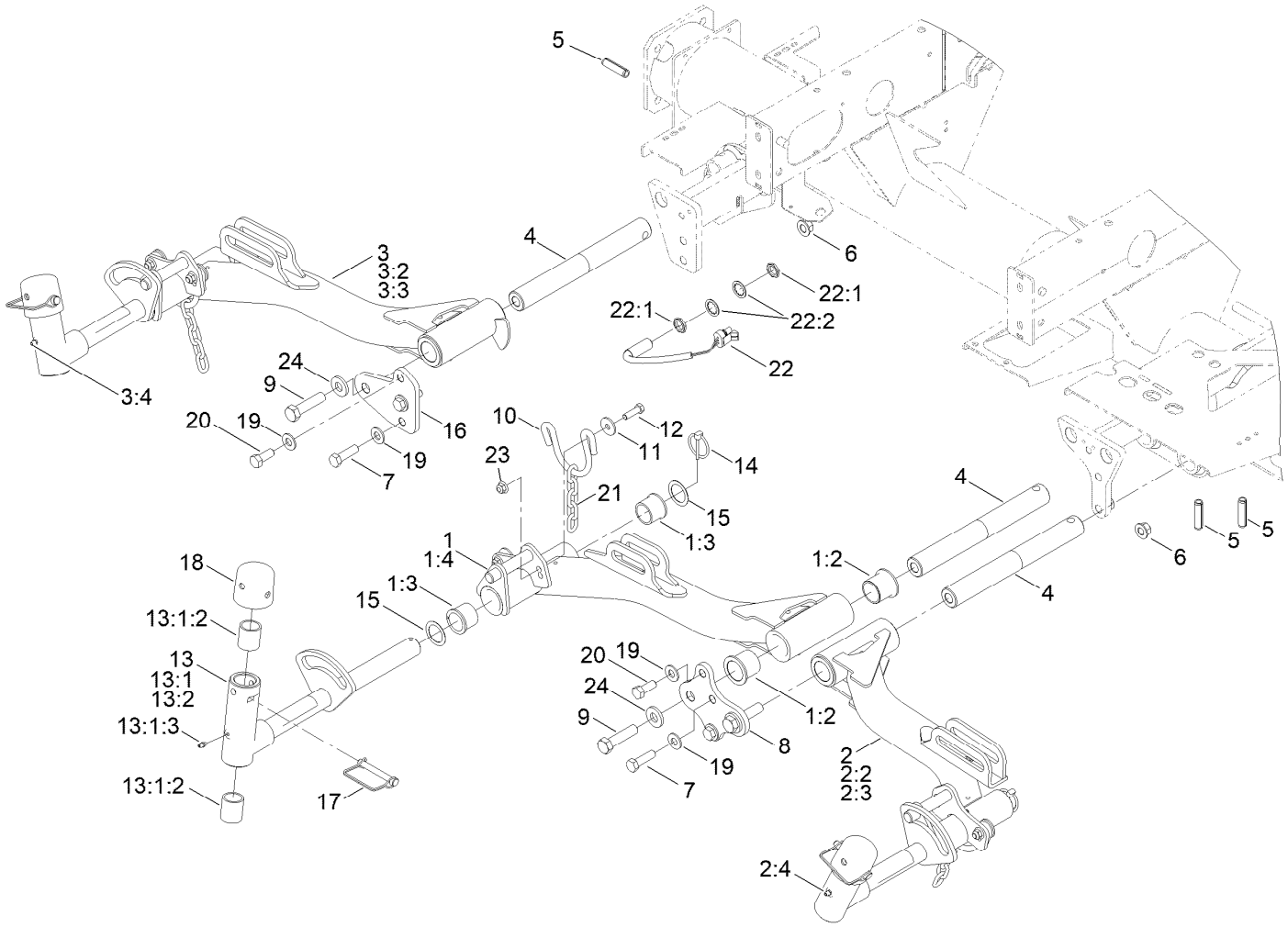

No. 1, 4 and 5 Lift Arm Hydraulic Assembly (continued)

Ref.	Part Number	Qty.	Description
22:2	117-3208	2	Washer-Lock, Internal Tooth
23	119-4042	6	Nut-HF, NI
24	99-7667	3	Washer-Flat

● Not serviced separately

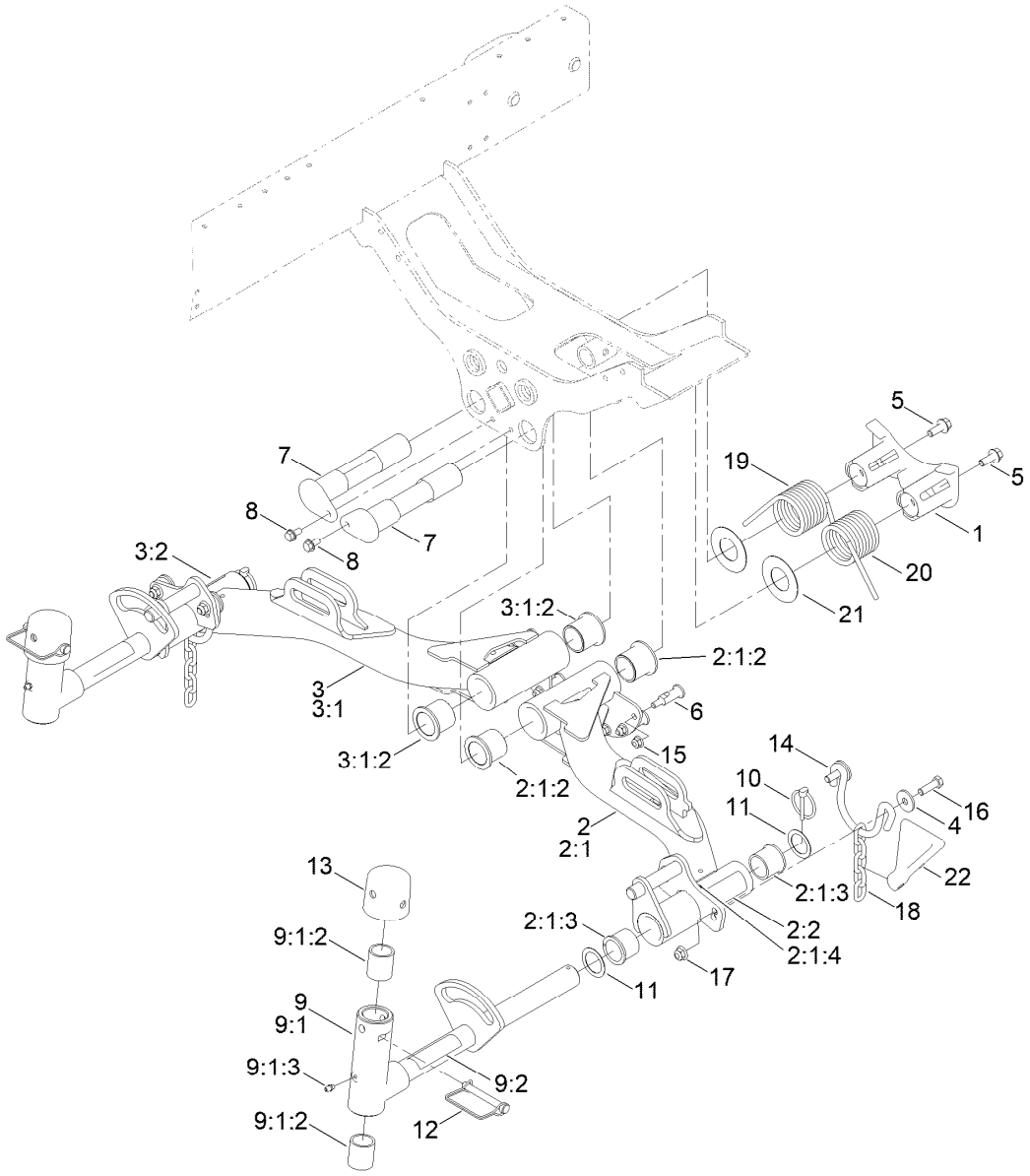

No. 2 and 3 Lift Arm Assembly

Ref.	Part Number	Qty.	Description
1	125-2018	1	Housing
2	136-8002	1	Lift Arm #2
2:1		1	Lift Arm ASM #2 ■
2:1:2	69-6470	2	Bushing-Caster
2:1:3	104-0015	2	Bushing-Flange
2:1:4	302-5	2	Fitting-Grease
2:2	93-6696	1	Decal-Warning
3	136-8003	1	Lift Arm #3
3:1		1	Lift Arm ASM #3 ■
3:1:2	69-6470	2	Bushing-Caster
3:1:3	104-0015	2	Bushing-Flange ●
3:1:4	302-5	2	Fitting-Grease ●
3:2	93-6696	1	Decal-Warning
4	63-8410	4	Washer
5	3234-11	2	Screw-HHF
6	120-6283	6	Stud-Shouldered
7	125-2037	2	Shaft
8	32144-14	2	Screw-HWH Thd Form

Ref.	Part Number	Qty.	Description
9	138-1248	2	Pivot Yoke ASM
9:1		1	Yoke-Pivot ■
9:1:2	121-3187	2	Bushing
9:1:3	302-5	1	Fitting-Grease
9:2	110-9642	1	Decal-Warning
10	92-1298	2	Pin-Lynch
11	76-2980	4	Washer-Thrust
12	107-7400	2	Pin-Lynch
13	107-4027	2	Cap
14	110-0922	2	Hoop-Chain
15	119-4041	6	Nut-HF
16	323-7	4	Screw-HH
17	119-4042	4	Nut-HF, NI
18	84-2451	2	Chain-Straight, 5 Link
19	99-5608-03	1	Spring-Torsion, RH
20	99-5609-03	1	Spring-Torsion, LH
21	110-5345	2	Washer
22	119-8010-03	1	Kickstand

● Not illustrated

■ Not serviced separately

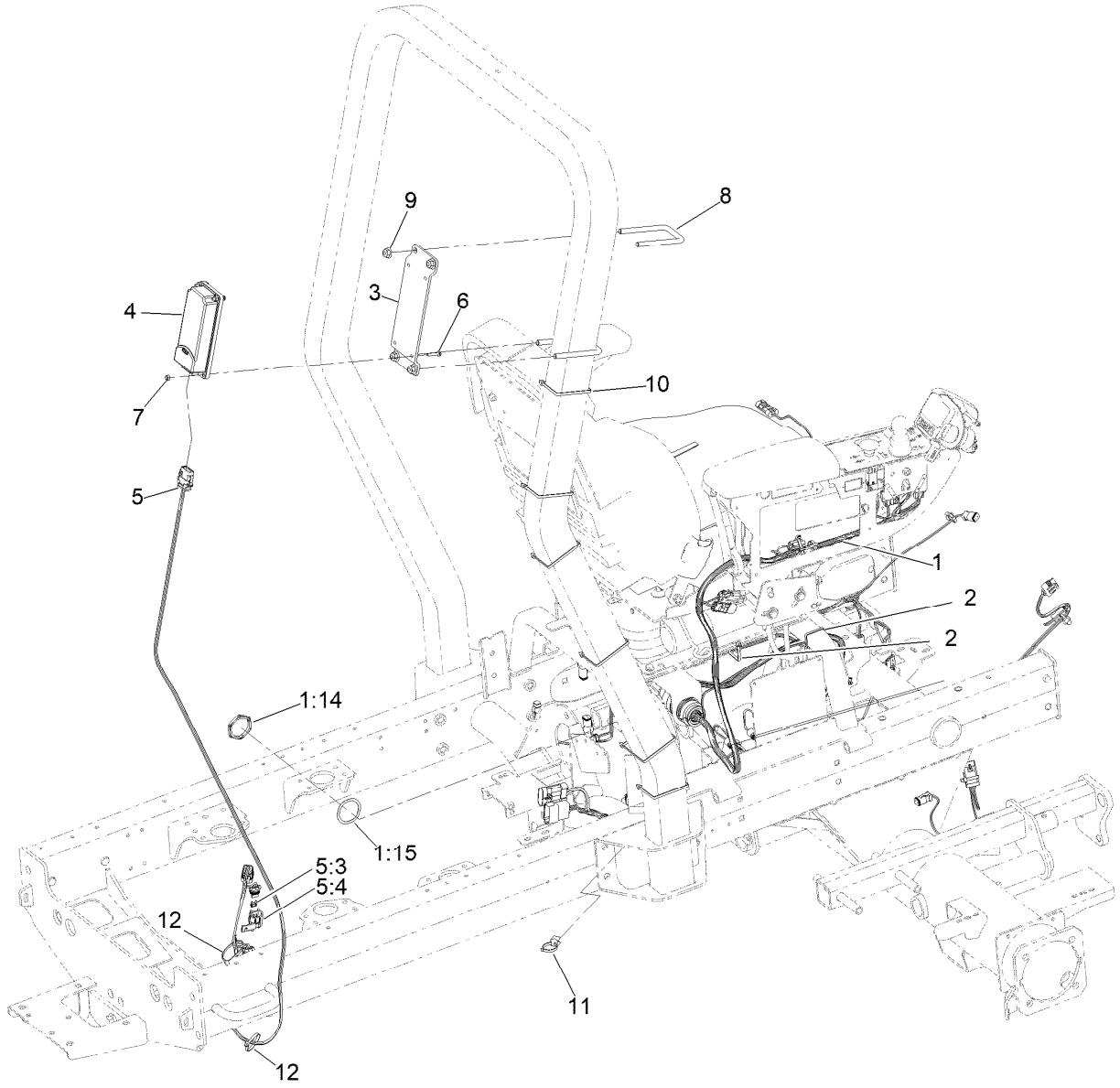

Seat and Control Arm Wiring Harness Assembly

Ref.	*Part Number*	*Qty.*	*Description*
1	122-2126	1	Harness-Wire, Seat
1:14	32180-135	1	Nut-Connector
1:15	32180-143	1	Washer-Lock
2	3290-378	2	Tie-Cable
3	161-8398-03	1	Bracket-Hmu Mouting
4	161-9001	1	Gateway-Telematics
5	122-2163	1	Harness-Wire
5:3	121-8861	1	Fuse-Mini Blade, 2 Amp

Ref.	*Part Number*	*Qty.*	*Description*
5:4	32180-101	1	Cover-Fuse, Single
6	131-6456	4	Screw-HWH
7	3296-2	4	Nut-Lock, NI
8	138-8991	2	U-Bolt-Sq
9	119-4042	4	Nut-HF, NI
10	3290-379	6	Tie-Cable
11	32180-078	1	Clip-Edge
12	3290-378	2	Tie-Cable

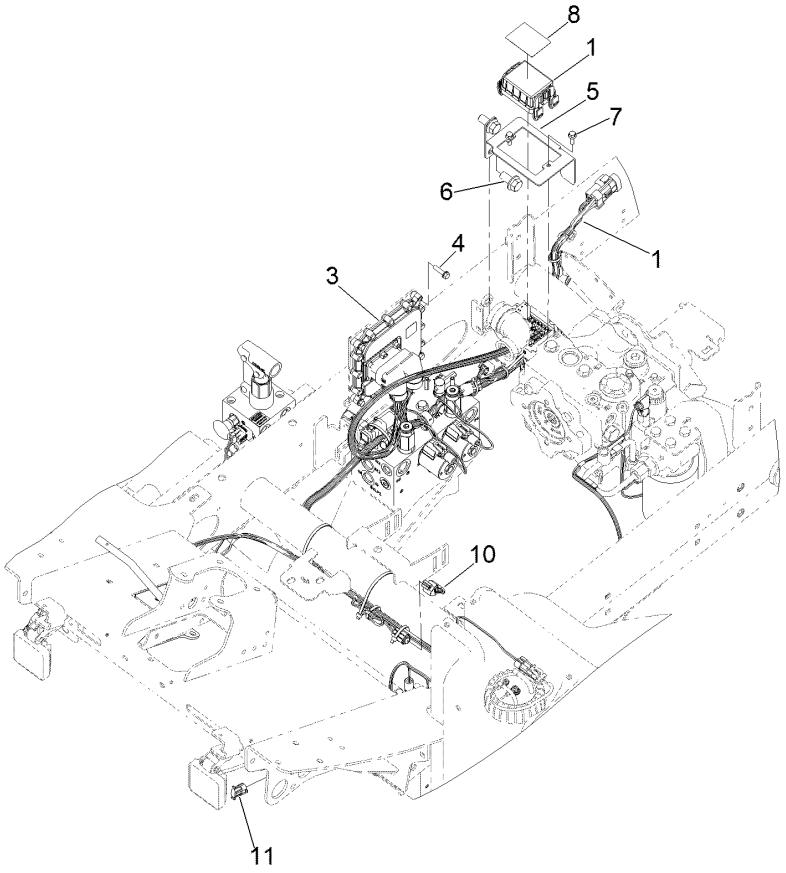

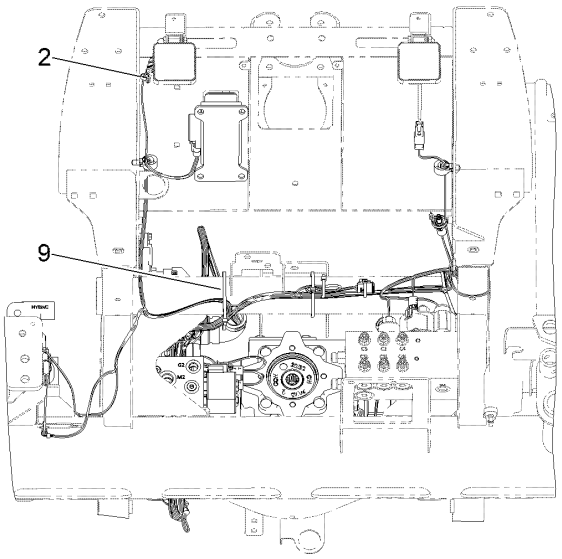

Main Wiring Harness Assembly

Ref.	*Part Number*	*Qty.*	*Description*
1	122-2912	1	Harness-Wire, Main
2	3290-378	1	Tie-Cable
3	127-2770	1	Controller
4	32144-86	4	Screw-HWHTF
5	145-2506-0P	1	Bracket-Pdm [primed]
6	3234-6	2	Screw-HHF
7	33103-020	2	Screw-HHF
8	145-2519	1	Decal-Fuses
9	3290-379	3	Tie-Cable
10	32180-089	1	Cap-Plug, 3 Way
11	32180-056	1	Cap

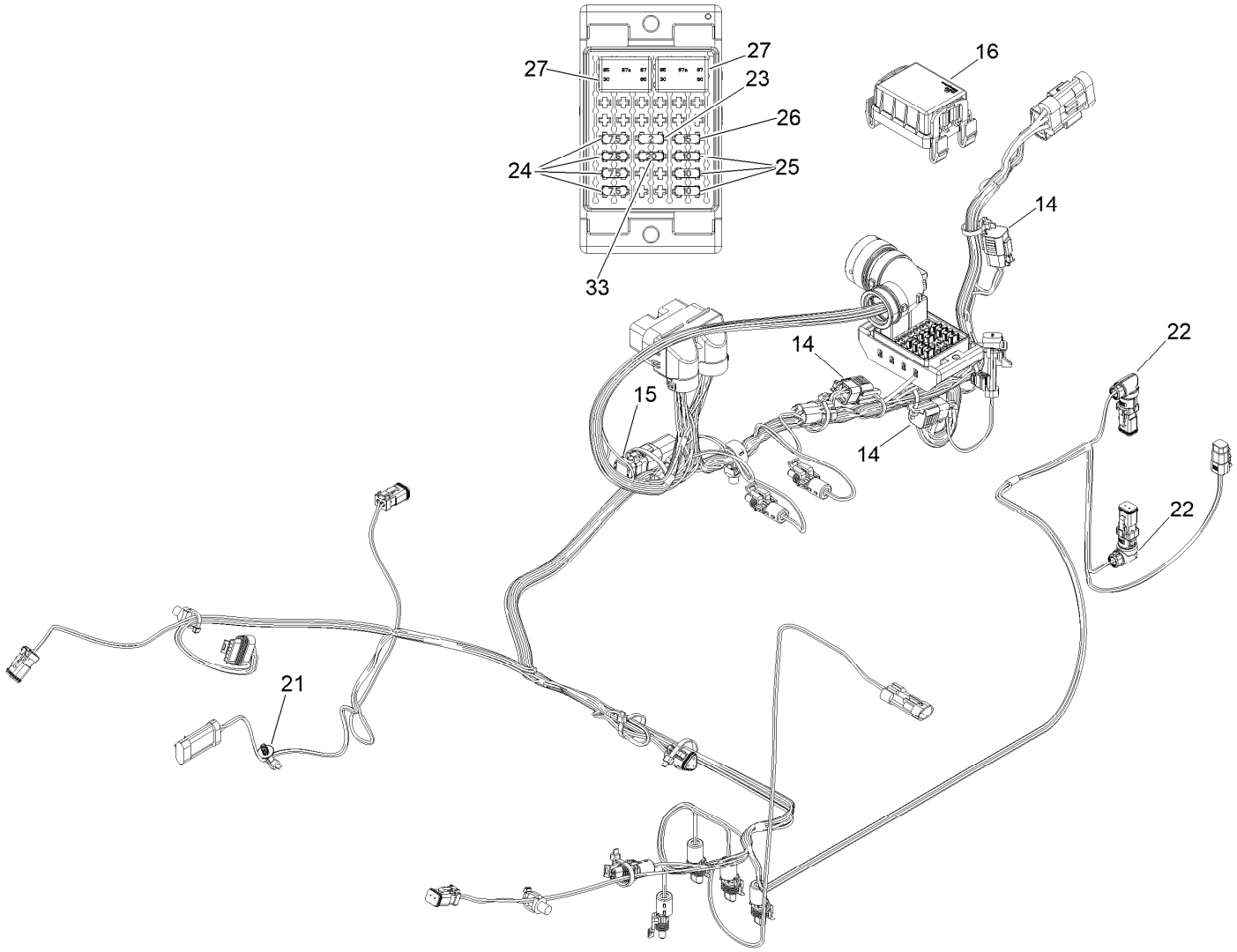

Wire Harness Assembly No. 122-2912

Ref.	*Part Number*	*Qty.*	*Description*
14	32180-156	3	Cap-Plug, 6 Way
15	122-1131	1	Conn, Capacitor-Sealed
16	32180-471	1	Cover-Chief, Bric
21	32180-400	1	Clip-Tie, Fir Tree W/Tie, 5MM/.196" Hole
22	32180-060	2	Backshell-Harnessflex, Dt06-2S 90 Degree
23	121-8861	1	Fuse-Mini Blade, 2 Amp
24	121-8865	4	Fuse-Mini Blade, 7.5 Amp
25	121-8866	3	Fuse-Mini Blade, 10 Amp
26	121-8867	1	Fuse-Mini Blade, 15 Amp
27	122-0368	2	Relay-280 ISO
33	121-8868	1	Fuse-Mini Blade, 20 Amp

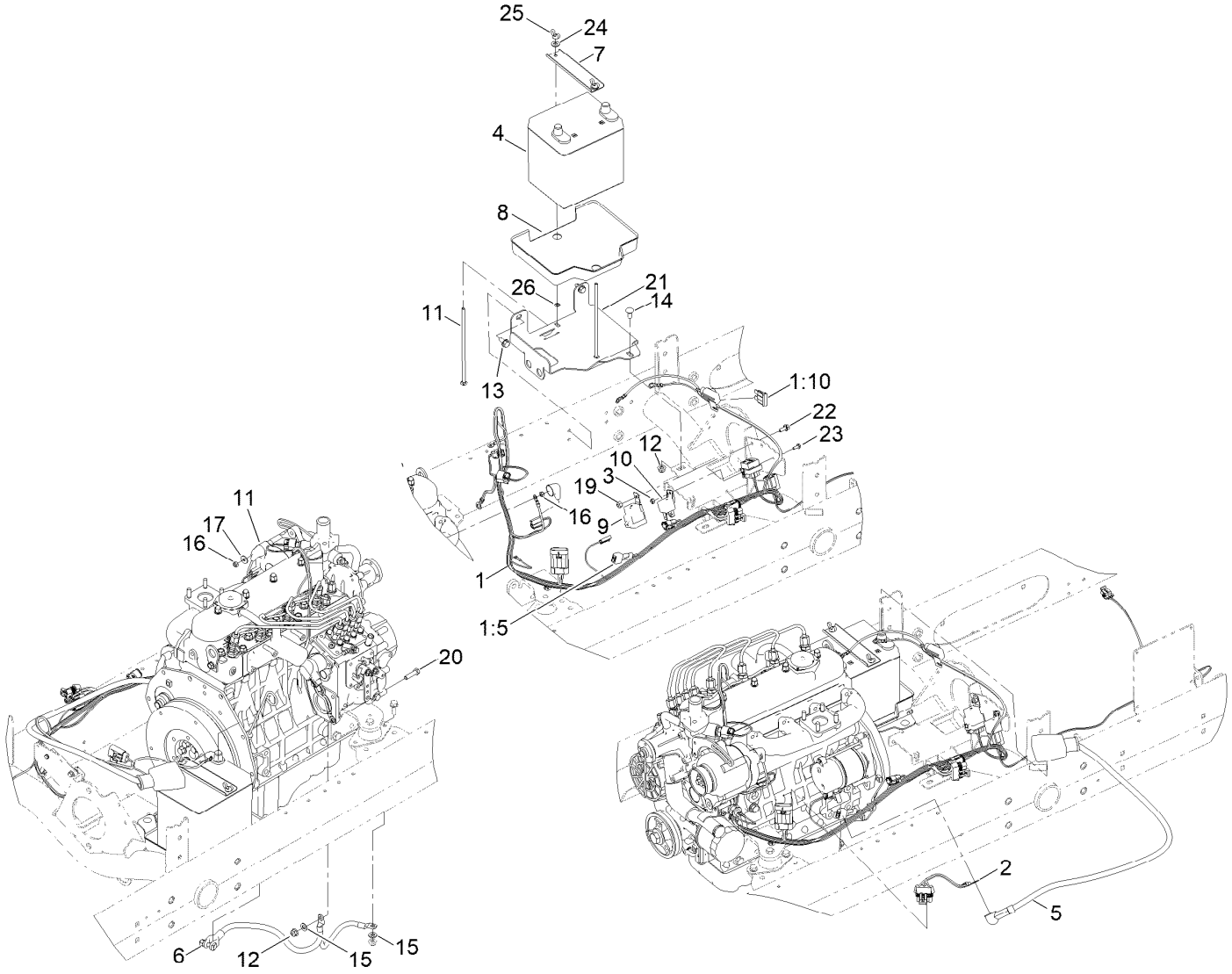

Battery and Engine Wiring Assembly

Ref.	Part Number	Qty.	Description
1	122-2599	1	Harness-Wire, Engine
1:5	100-4918	1	Diode
1:10	109101	1	Fuse-Blade, 20 Amp
2	99-3441	1	Harness-Wire, Fusible Link
3	3296-2	1	Nut-Lock, NI
4	161-6891	1	Battery-Wet,12V,540 CCA
5	108-1802	1	Cable-Battery, Positive
6	110-8813	1	Cable-Battery, Negative
7	163-3515-0P	1	Channel-Clamp, Battery
8	163-3526	1	Tray-Battery
9	99-7430	1	Relay-Mini
10	99-7435	1	Relay
11	137-8106	1	Screw-CARR
12	119-4041	2	Nut-HF

Ref.	Part Number	Qty.	Description
13	32104-32	2	Screw-HWH
14	3230-1	1	Bolt-CARR
15	120-9683	2	Washer-Plain
16	115-7373	1	Nut-Lock
17	3256-78	1	Washer-Flat
19	3296-42	1	Nut-Lock, NI
20	322-6	1	Screw-HH
21	163-3525-01	1	Bracket-Battery, Row
22	3234-33	1	Screw-HHF
23	3290-321	1	Screw-HWH
24	3256-23	2	Washer-Plain
25	32103-22	2	Nut-Wing
26	32115-15	2	Nut-Push

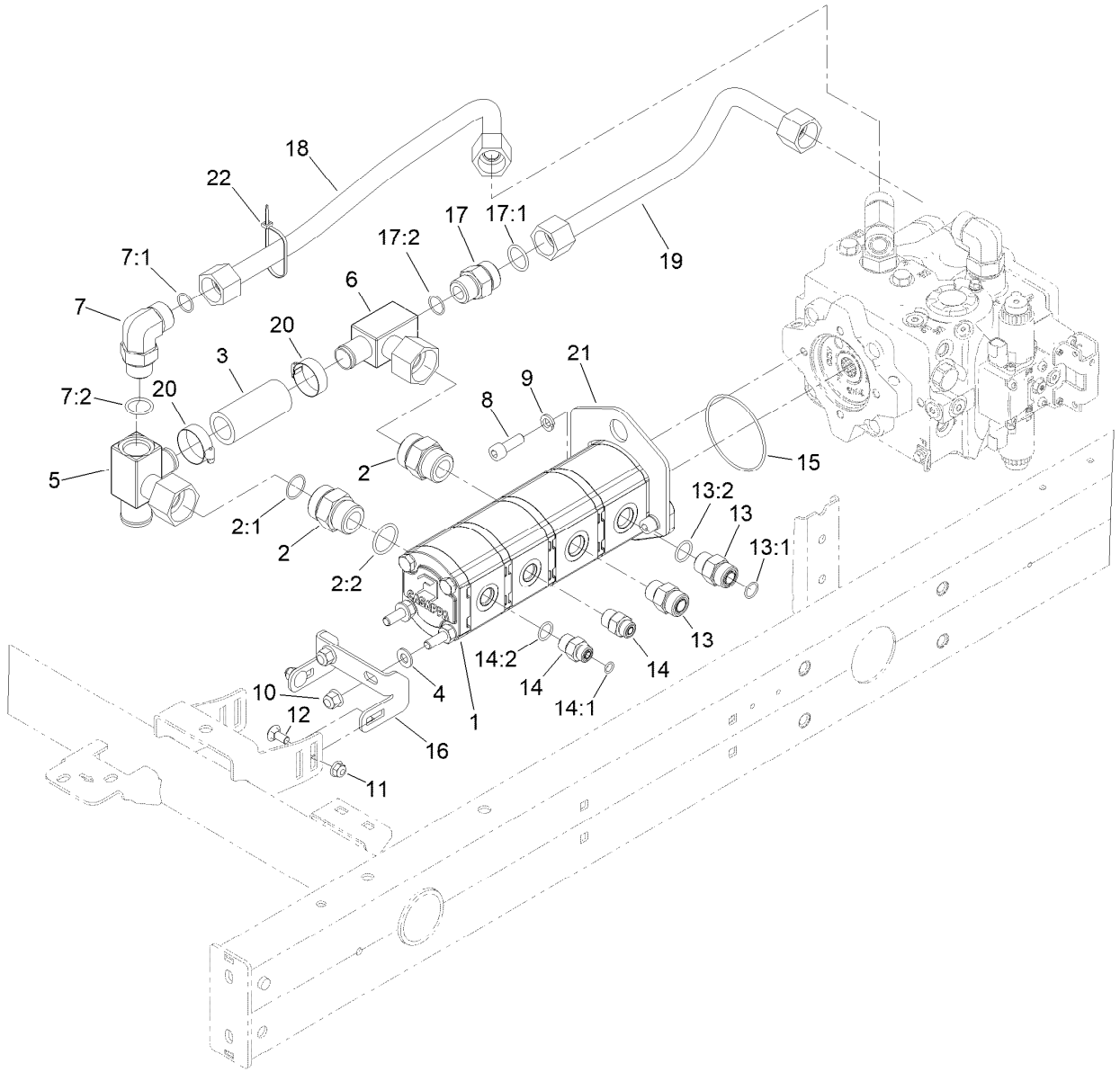

Gear Pump Assembly

Ref.	Part Number	Qty.	Description
1	107-4547	1	Gear Pump ASM
2	104-3797	2	Fitting-Straight
2:1	237-146	1	O-Ring
2:2	340-65	1	O-Ring
3	144-2092	1	Hose-Formed
4	3256-24	2	Washer-Plain
5	145-2570	1	Manifold-Tube
6	144-2093	1	Manifold-Tube
7	340-142	1	Fitting-Elbow, 90 DEG
7:1	237-58	1	O-Ring
7:2	237-81	1	O-Ring
8	ST80801	2	Screw-HSH
9	48-9590	2	Washer-Lock
10	103-9511	2	Nut-Flg
11	119-4041	2	Nut-HF
12	3230-1	2	Bolt-CARR

Ref.	Part Number	Qty.	Description
13	340-7	2	Fitting-Straight
13:1	237-65	1	O-Ring
13:2	237-80	1	O-Ring
14	340-3	2	Fitting-Straight
14:1	237-22	1	O-Ring
14:2	237-79	1	O-Ring
15	237-161	1	O-Ring
16	133-2946-0P	1	Brkt-Gear Pump
17	340-9	1	Fitting-STR
17:1	237-58	1	O-Ring
17:2	237-81	1	O-Ring
18	145-2561	1	Tube ASM-Hydraulic
19	145-2454	1	Tube ASM-Hydraulic
20	2412-34	2	Clamp-Hose
21	145-2548-0P	1	Bracket-Lift, Pump
22	3290-378	1	Tie-Cable

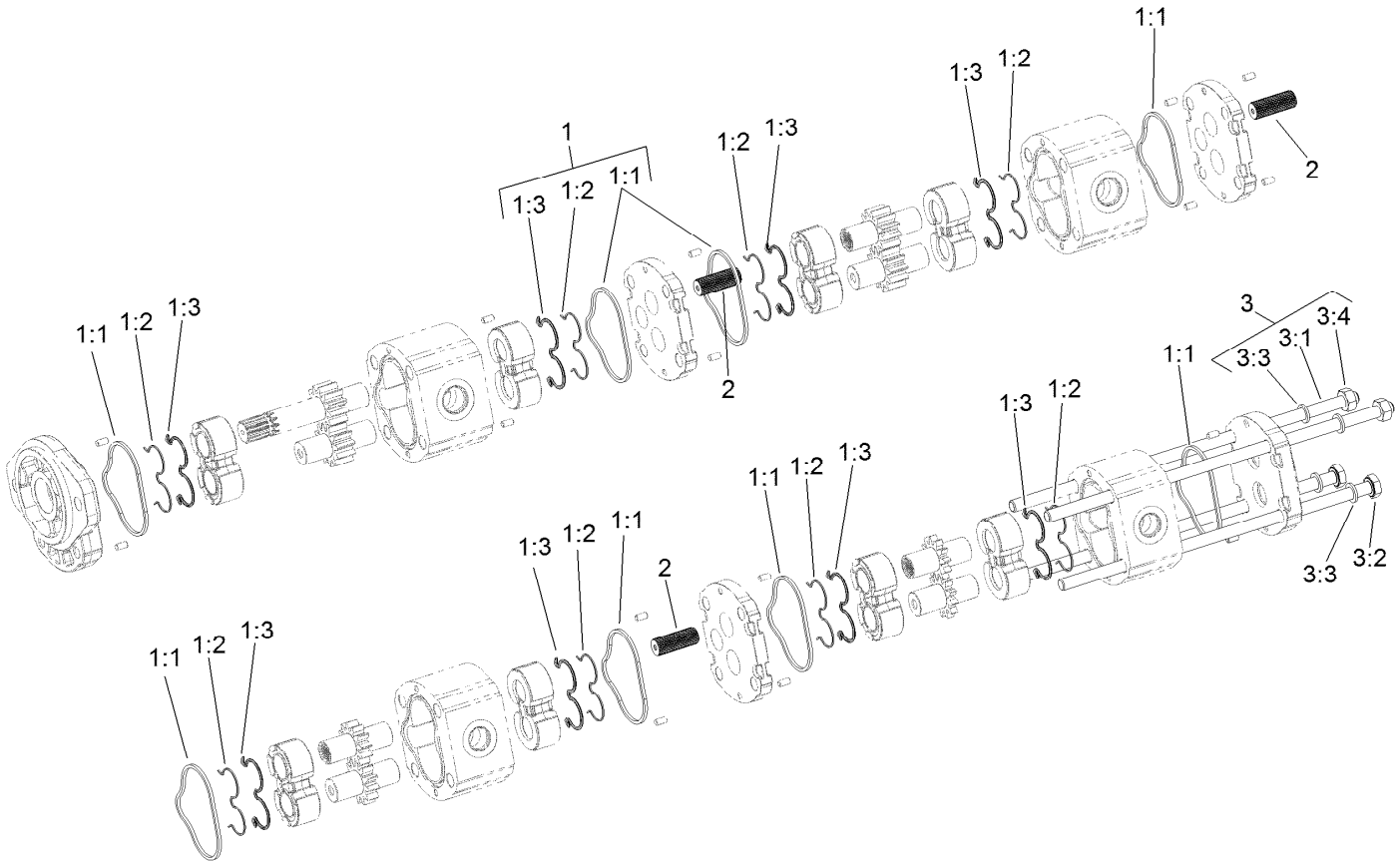

Gear Pump Assembly No. 107-4547

Ref.	*Part Number*	*Qty.*	*Description*
1	108-4595	1	Seal Kit
1:1		8	Seal ●
1:2		8	Seal ●
1:3		8	Ring-Back Up ●
2	120-6284	3	Hub-Connecting
3	125-8760	1	Kit-Bolt
3:1		2	Bolt-Stud ●
3:2		2	Screw ●
3:3		4	Washer ●
3:4		2	Nut ●

● Not serviced separately

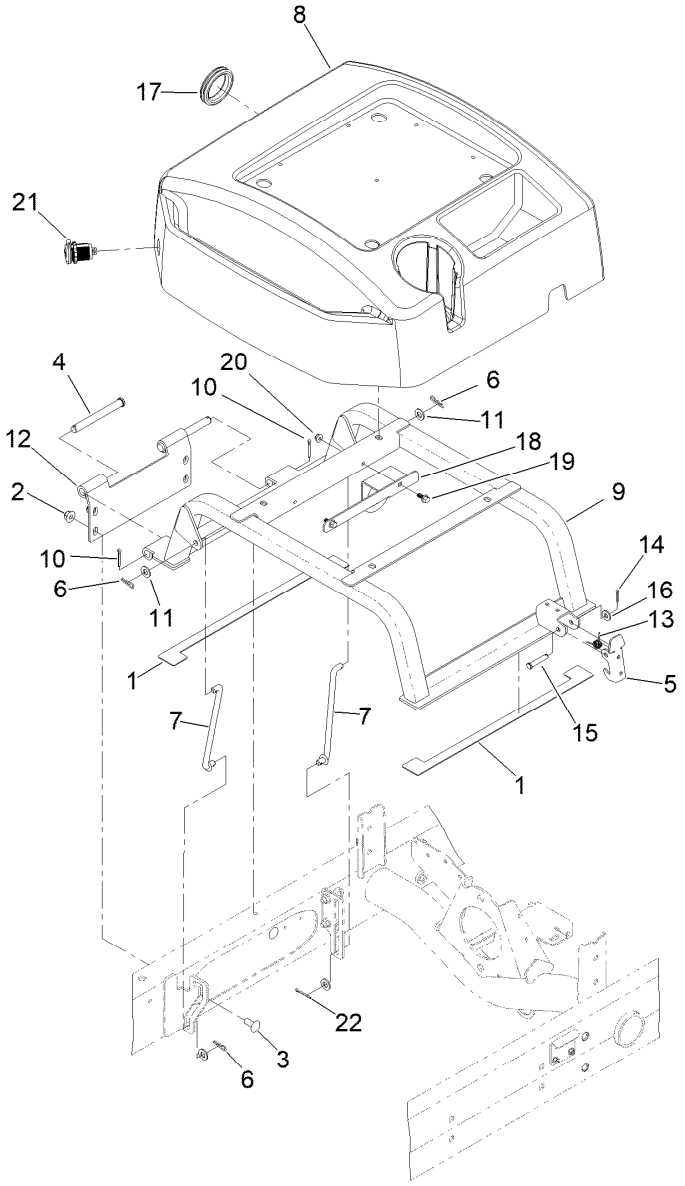

Seat Base Assembly

Ref.	Part Number	Qty.	Description
1	110-5255	2	Bumper-Base, Seat
2	119-4042	4	Nut-HF, NI
3	3231-27	4	Screw-CARR
4	283-83	2	Pin-Clevis
5	110-8971	1	Latch
6	3290-307	3	Pin-Cotter
7	98-0917	2	Rod-Prop
8	145-2450	1	Cover-Seatbase
9	125-2122-03	1	Seat Base ASM
10	3272-11	2	Pin-Cotter
11	3256-24	4	Washer-Plain

Ref.	Part Number	Qty.	Description
12	125-2121-03	1	Hinge-Seatbase
13	104-4821	1	Spring-Torsion
14	3272-6	1	Pin-Cotter
15	94-3829	1	Pin-Clevis
16	3256-2	1	Washer-Flat
17	240-12	1	Grommet-Rubber
18	145-2480-0P	1	Bracket-Harness
19	99-6810	2	Screw-HHF
20	104-7201	2	Nut-HF, NI
21	131-8388	1	Socket-USB
22	3272-4	1	Pin-Cotter

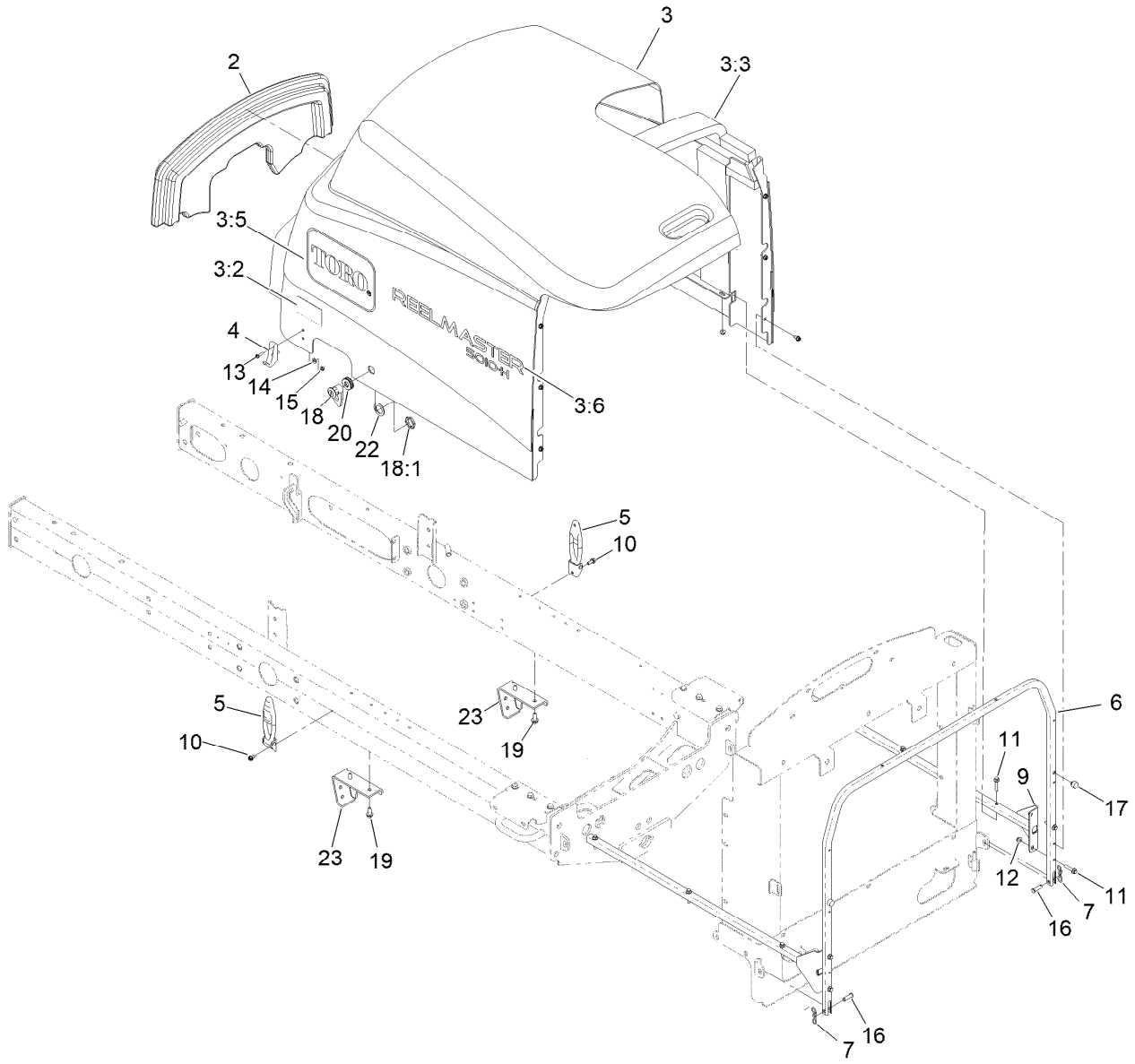

Hood Assembly

Ref.	Part Number	Qty.	Description
2	145-2456	1	Saddle-Hood
3	145-2538	1	Hood ASM (Rm5510 Service)
3:2	106-6754	2	Decal-Danger
3:3	110-5252	1	Foam-Sealed
3:4	110-9002	1	Foil Tape Kit ●
3:5	66-6140	2	Decal
3:6	110-0964	2	Decal
4	103-2897	2	Latch-Catch
5	103-2898	2	Latch-Rubber
6	125-8819-03	1	Tube-Frame, Hood
7	105-7512	2	Pin-Tie, Bow
9	108-1790-03	2	Tube
10	32104-17	8	Screw-HWH

Ref.	Part Number	Qty.	Description
11	3234-21	10	Screw-HHF
12	104-7201	10	Nut-HF, NI
13	32105-13	4	Screw-HWH
14	3256-14	4	Washer-Flat
15	3296-12	4	Nut-Lock, NI
16	283-61	2	Pin-Yoke
17	107-8042	2	Bumper-Rubber
18	98-5398	1	Latch
18:1	3218-20	1	Nut-Jam
19	32104-32	4	Screw-HWH
20	104-1453	1	Grommet
22	99-4958	1	Spacer
23	110-0979-03	2	Bracket-Deflector

● Not illustrated

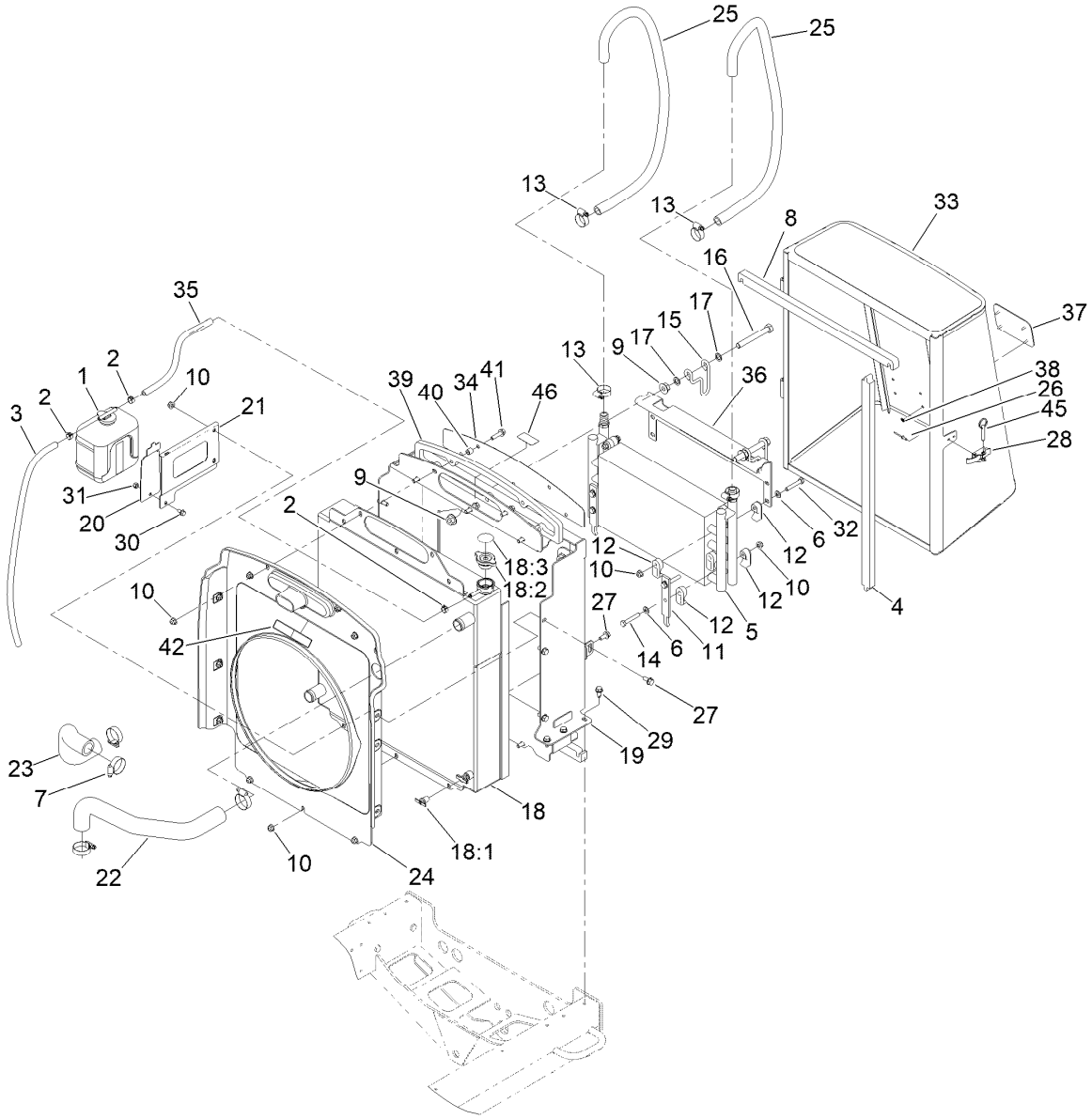

Radiator Assembly

Ref.	Part Number	Qty.	Description
1	108-0638	1	Bottle-Overflow
2	92-2379	3	Clamp-Hose
3	110-3257	1	Hose-Fuel
4	110-0967	2	Seal-Foam
5	100-4869	1	Cooler-Oil
6	3256-23	8	Washer-Plain
7	2412-3	4	Clamp-Hose
8	110-0968	2	Seal-Foam
9	32128-49	4	Nut-HHF
10	119-4041	22	Nut-HF
11	104-5460-03	2	Plate-Mount, Oil Cooler
12	105-3943	16	Clamp-Cooler, Oil
13	2412-129	4	Clamp-Hose
14	322-10	4	Screw-HH
15	104-5429	2	Clamp-Form, Wire
16	325-17	2	Screw-HH
17	41-8440	4	Washer
18	119-6956	1	Radiator ASM
18:1	304-46	1	Draincock
18:2	93-5957	1	Cap-Radiator
18:3	106-6755	1	Decal-Cap, Radiator

Ref.	Part Number	Qty.	Description
19	127-2665-03	1	Frame-Support, Radiator
20	108-1665-0P	1	Bracket - Reservior
21	108-1666-0P	1	Bracket - Reservoir
22	108-1696	1	Hose-Formed
23	108-1697	1	Hose-Formed
24	108-1791	1	Shroud-Fan
25	108-1693	2	Hose
26	3269-15	2	Rivet-Pop
27	3234-5	9	Screw-HHF
28	115-1554	1	Latch-Draw
29	32104-32	6	Screw-HWH
30	3234-13	1	Screw-HHF
31	3296-42	1	Nut-Lock, NI
32	322-21	4	Screw-HH
33	110-0952-03	1	Screen ASM
34	108-1843-0P	1	Screen - Air Intake
35	110-4104	1	Hose-Fuel
36	107-2043-03	1	Bracket-Oil Cooler, Top
37	93-6028	1	Plate-Logo
38	138-6996	4	Nut-Push
39	110-5324	1	Seal-Foam

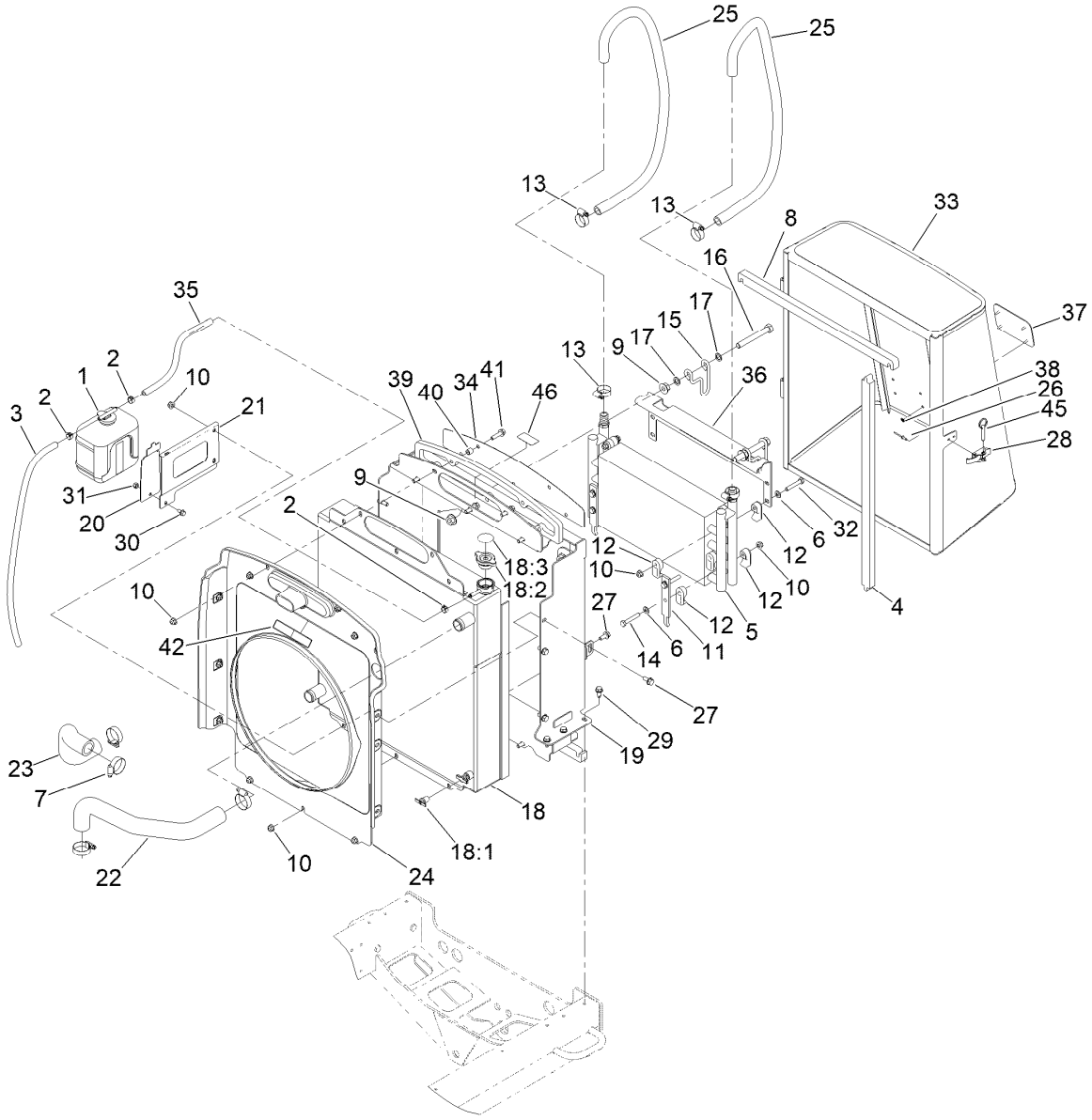

Radiator Assembly (continued)

Ref.	Part Number	Qty.	Description
40	1-603903	5	Spacer
41	3234-36	5	Screw-HHF
42	93-7272	1	Decal-Warning
45	115-1556	1	Pin-Ball, Detent
46	137-8127	1	Decal-No Spray

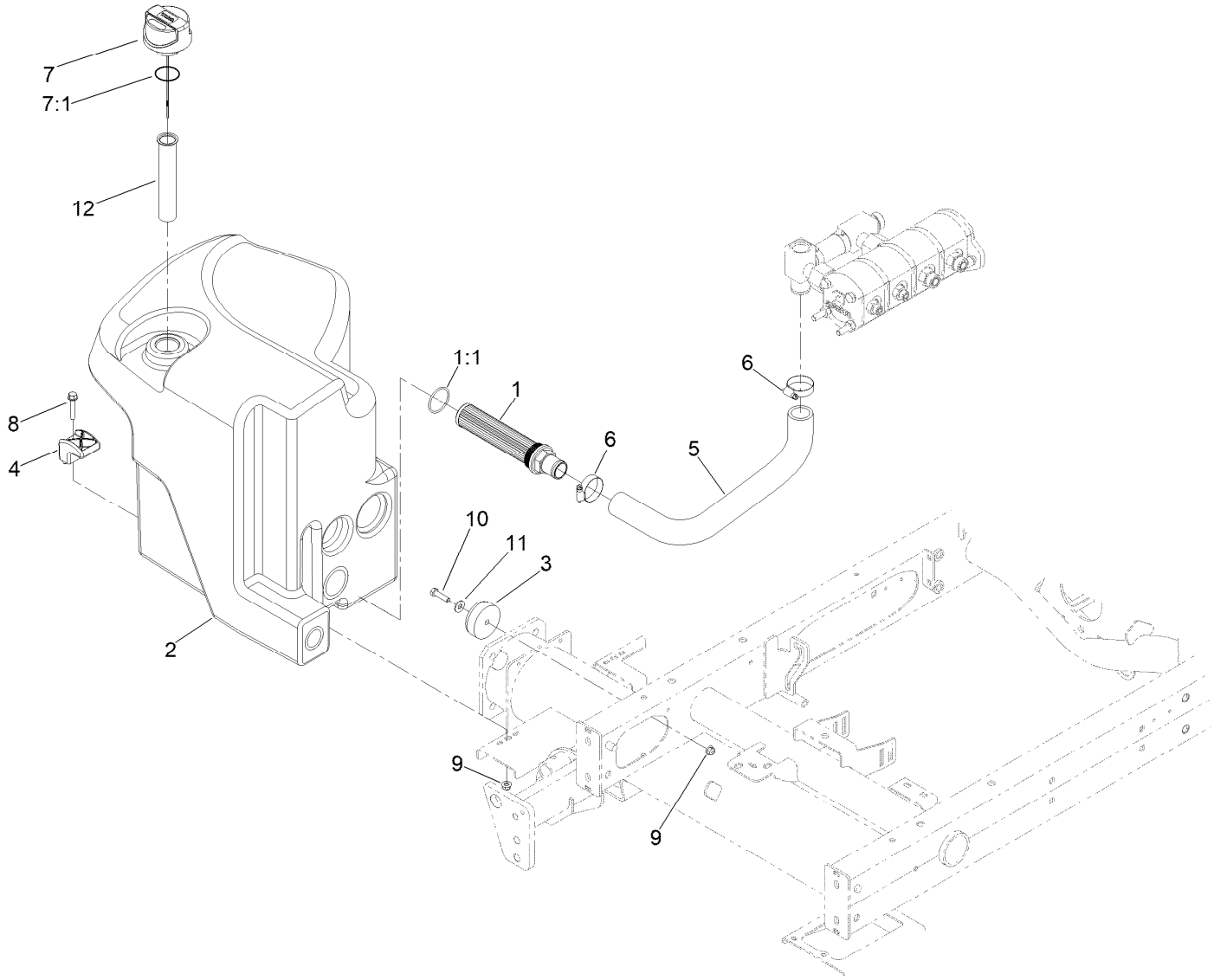

Hydraulic Tank Assembly

Ref.	*Part Number*	*Qty.*	*Description*
1	145-2463	1	Strainer-Tank, Hydraulic
1:1	340-136	1	O-Ring
2	145-2487	1	Tank-Hydraulic
3	108-1605	1	Bumper-Recess
4	107-4543	2	Clamp
5	144-2076	1	Hose-Suction
6	2412-3	2	Clamp-Hose
7	117-0193	1	Cap-Hydraulic, Vented Breather
7:1	237-101	1	O-Ring
8	94-5780	2	Screw-HWH
9	119-4041	3	Nut-HF
10	322-6	1	Screw-HH
11	3256-3	1	Washer-Flat
12	61-2790	1	Filter-Screen

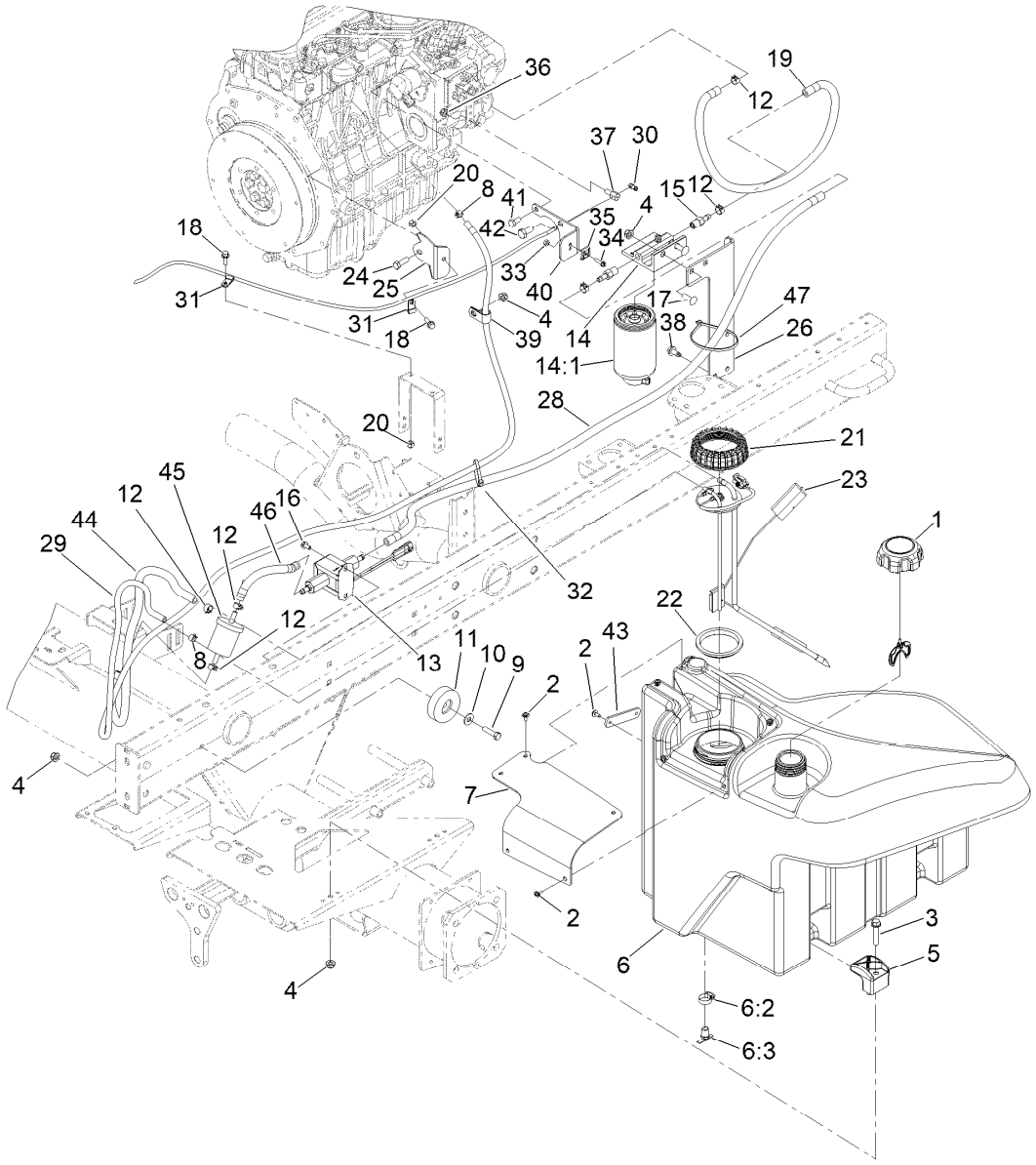

Fuel System Assembly

Ref.	Part Number	Qty.	Description
1	117-5894	1	Fuel Cap ASM
2	109-2661	7	Screw-PPH
3	94-5780	2	Screw-HWH
4	119-4041	6	Nut-HF
5	107-4543	2	Clamp
6	125-2907	1	Fuel Tank ASM
6:2	2412-36	1	Clamp-Hose
6:3	304-46	1	Draincock
7	125-2903	1	Cover-Pump/Sender
8	2412-80	2	Clamp-Hose
9	322-6	1	Screw-HH
10	3256-3	1	Washer-Flat
11	108-1605	1	Bumper-Recess
12	92-2379	8	Clamp-Hose
13	145-3160	1	Pump-Fuel, Electric
14	110-9044	1	Separator-Filter
14:1	110-9049	1	Filter-Spin On, Fuel/Water
15	353-783	2	Fitting-STR
16	32144-4	2	Screw-HWH
17	3230-22	2	Screw-CARR
18	3234-4	2	Screw-HHF

Ref.	Part Number	Qty.	Description
19	109-0309	1	Hose-Fuel
20	3296-42	2	Nut-Lock, NI
21	140-6245	1	Cap-Pump, Fuel
22	140-6246	1	Gasket-Pump, Fuel,
23	121-5642	1	Sender-Fuel
24	322-5	1	Screw-HH
25	110-9007-0P	1	Support - Cable, Throttle
26	110-8968-0P	1	Mount-Water Separator
28	138-4714	1	Hose-Fuel
29	125-8808	1	Hose-Fuel
30	112-9919	1	Stop-Cable, Throttle
31	2412-149	2	Clamp-R
32	3290-378	4	Tie-Cable
33	3296-2	1	Nut-Lock, NI
34	32105-13	1	Screw-HWH
35	81-1690	1	Clamp-Cable
36	3296-20	1	Nut-Lock, NI
37	98-9311	1	Swivel-Throttle
38	32104-32	4	Screw-HWH
39	2412-41	1	Clamp-R
40	110-9009-0P	1	Bracket-Cable, Throttle

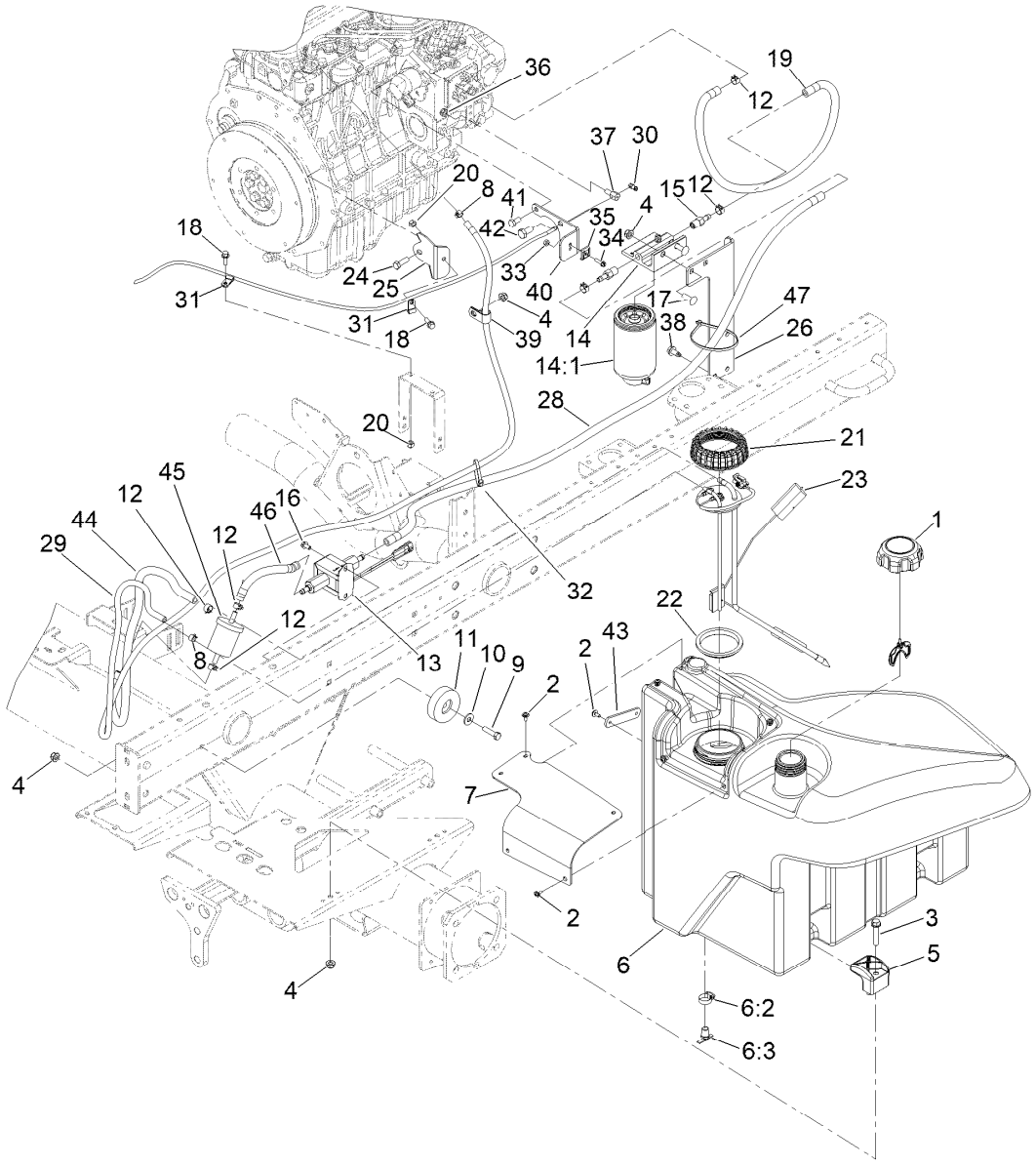

Fuel System Assembly (continued)

Ref.	Part Number	Qty.	Description
41	33114-016	1	Screw-HH
42	63-7790	1	Screw-Cap
43	125-2945	1	Strap-Cable
44	110-3257	1	Hose-Fuel
45	98-7612	1	Filter-Fuel
46	112-2386	1	Hose-Fuel
47	3290-379	1	Tie-Cable

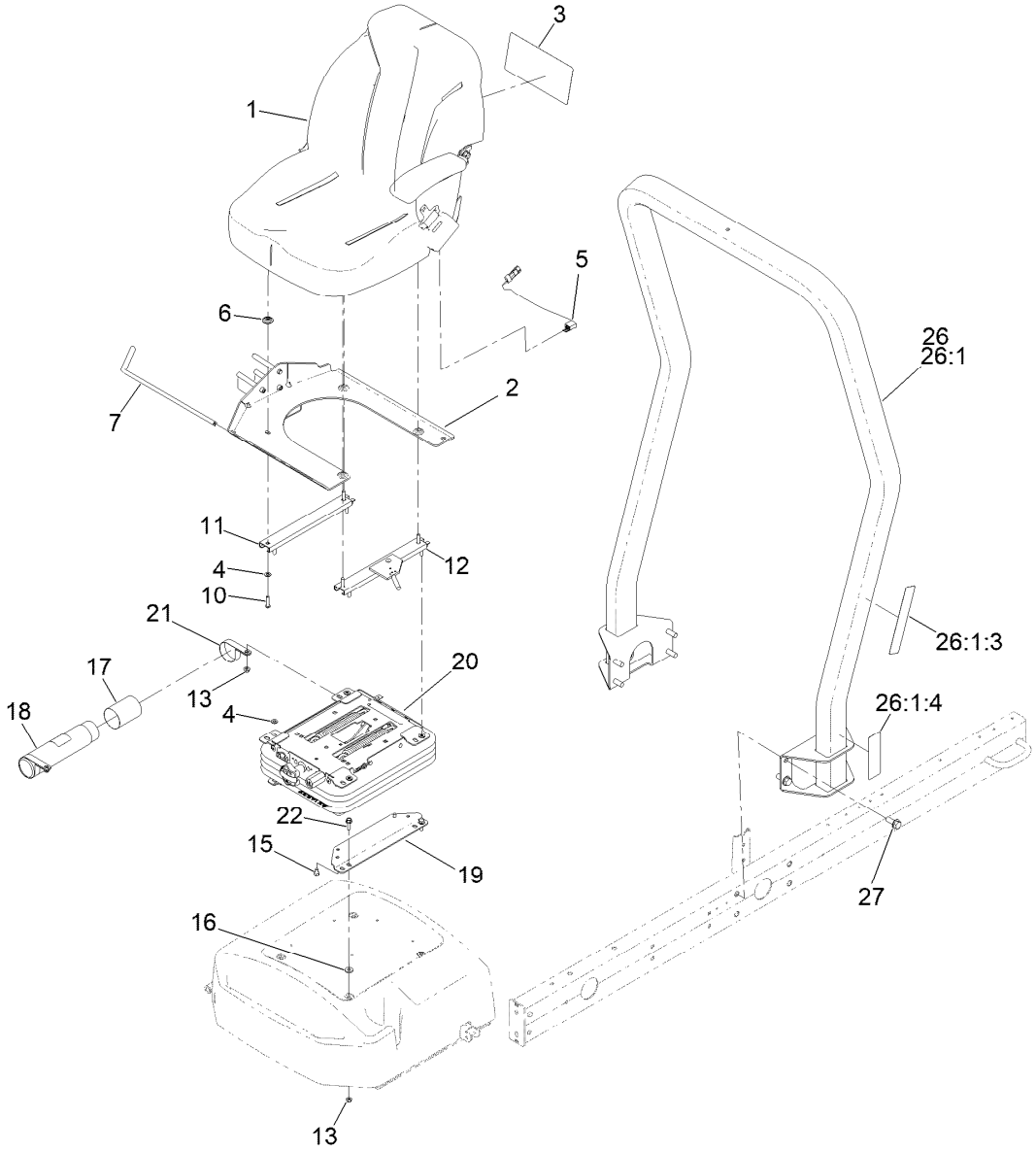

Seat and Roll-Over Protection System Assembly

Ref.	Part Number	Qty.	Description
1	139-2700	1	Seat ASM
2	138-6985-03	1	Mount-Seat
3	145-2572	1	Decal-Service
4	3256-23	8	Washer-Plain
5	108-8657	1	Harness-Wire, Seat
6	136-9002	4	Spacer-Mounting
7	130-7100	1	Trim-Seatbase
10	3290-511	4	Screw-HSBH
11	92-8990	1	Adjuster-Seat, Non-Locking
12	92-8991	1	Adjuster (W/Latch)
13	119-4041	8	Nut-HF
15	48-7680	4	Screw-HH

Ref.	Part Number	Qty.	Description
16	71-9310	4	Spacer
17	104-7048	1	Cap-Housing
18	104-7050	1	Tube-Manual
19	108-6590-0P	2	Bracket-Seat, Lower
20	145-5295	1	Suspension ASM
21	2412-133	2	Clamp-R
22	3234-17	4	Screw-HHF
26	136-7954	1	ROPS ASM
26:1		1	ROPS ASM ●
26:1:3	136-3702	1	Decal-Safety, ROPS
26:1:4	136-2159	1	Decal-Seat Service
27	3234-38	8	Screw-HHF

● Not serviced separately

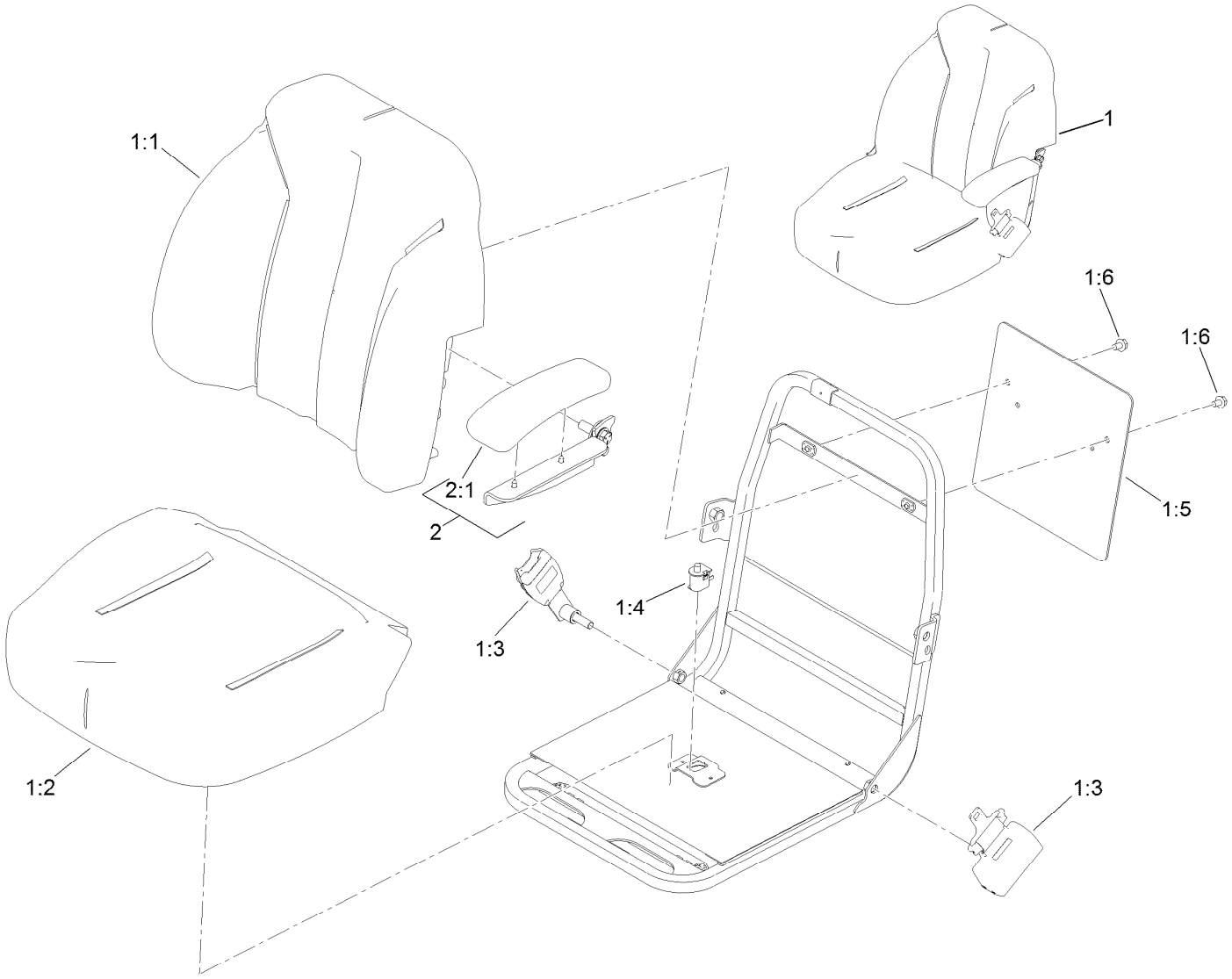

Seat Assembly No. 139-2700

Ref.	*Part Number*	*Qty.*	*Description*
1	139-2680	1	Seat ASM
1:1	145-0083	1	Cover-Seat, Back
1:2	145-0084	1	Cover-Seat, Bottom
1:3	139-2707	1	Seat Belt Kit
1:4	82-2190	1	Switch-Bail
1:5	139-2701	1	Plate-Decal
1:6	3234-30	2	Screw-HHF
2	121-3660	1	LH Arm Rest Kit
2:1	110-4163	1	Cushion-Rest, Arm

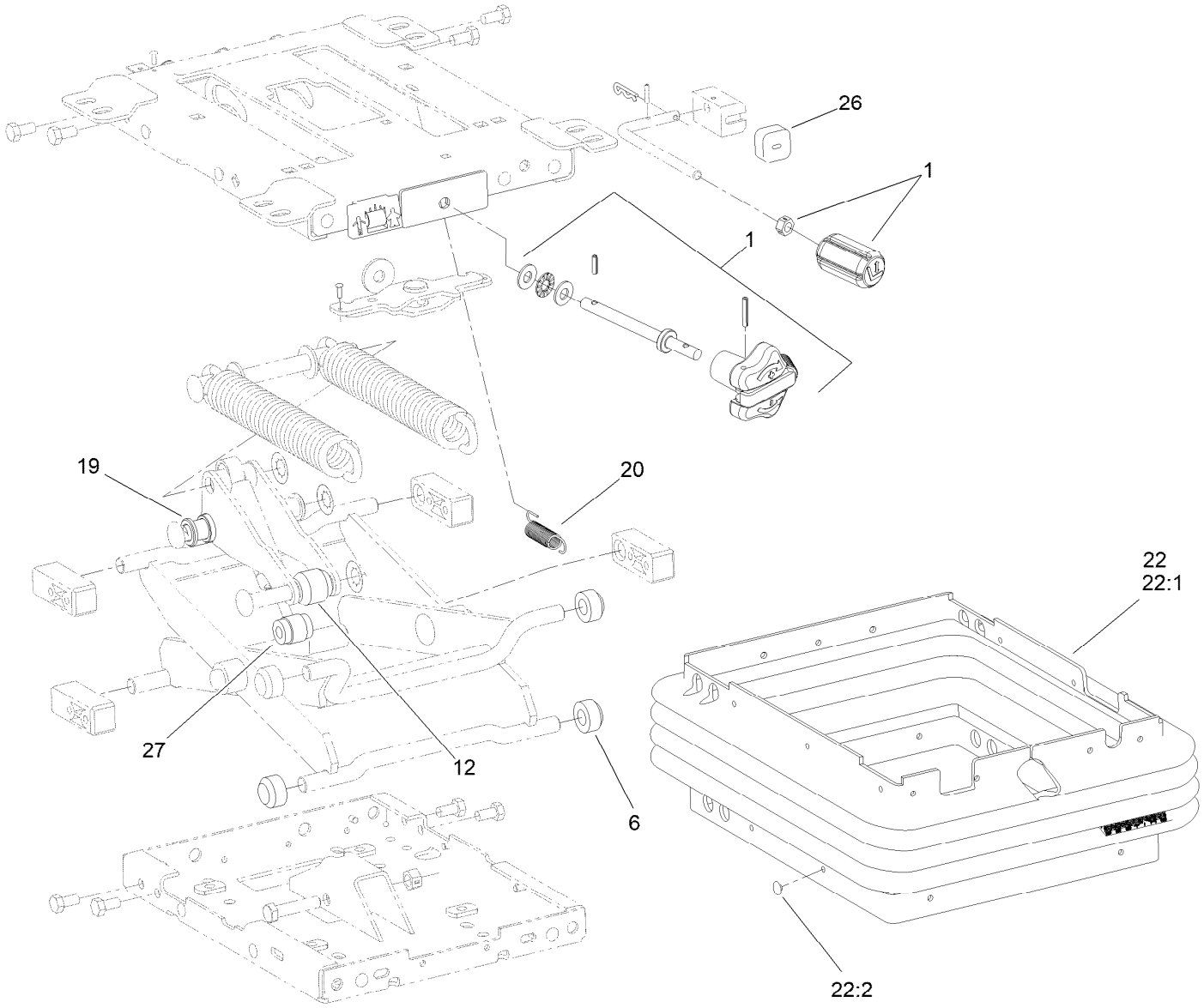

Mechanical Seat Suspension Assembly No. 145-5295

Ref.	*Part Number*	*Qty.*	*Description*
1	145-5296	1	Knob Service Kit
6	108-9632	4	Roller
12	145-5297	1	Roller-Plastic, 36MM
19	108-9622	2	Tube
20	108-9633	1	Spring-Extension
22	112-0164	1	Boot Kit
22:1		1	Boot-Suspension ●
22:2	108-9641	21	Clip-Plug
26	108-9634	1	Bumper
27	108-9614	1	Damper

● Not serviced separately

Traction Pump Mounting Assembly

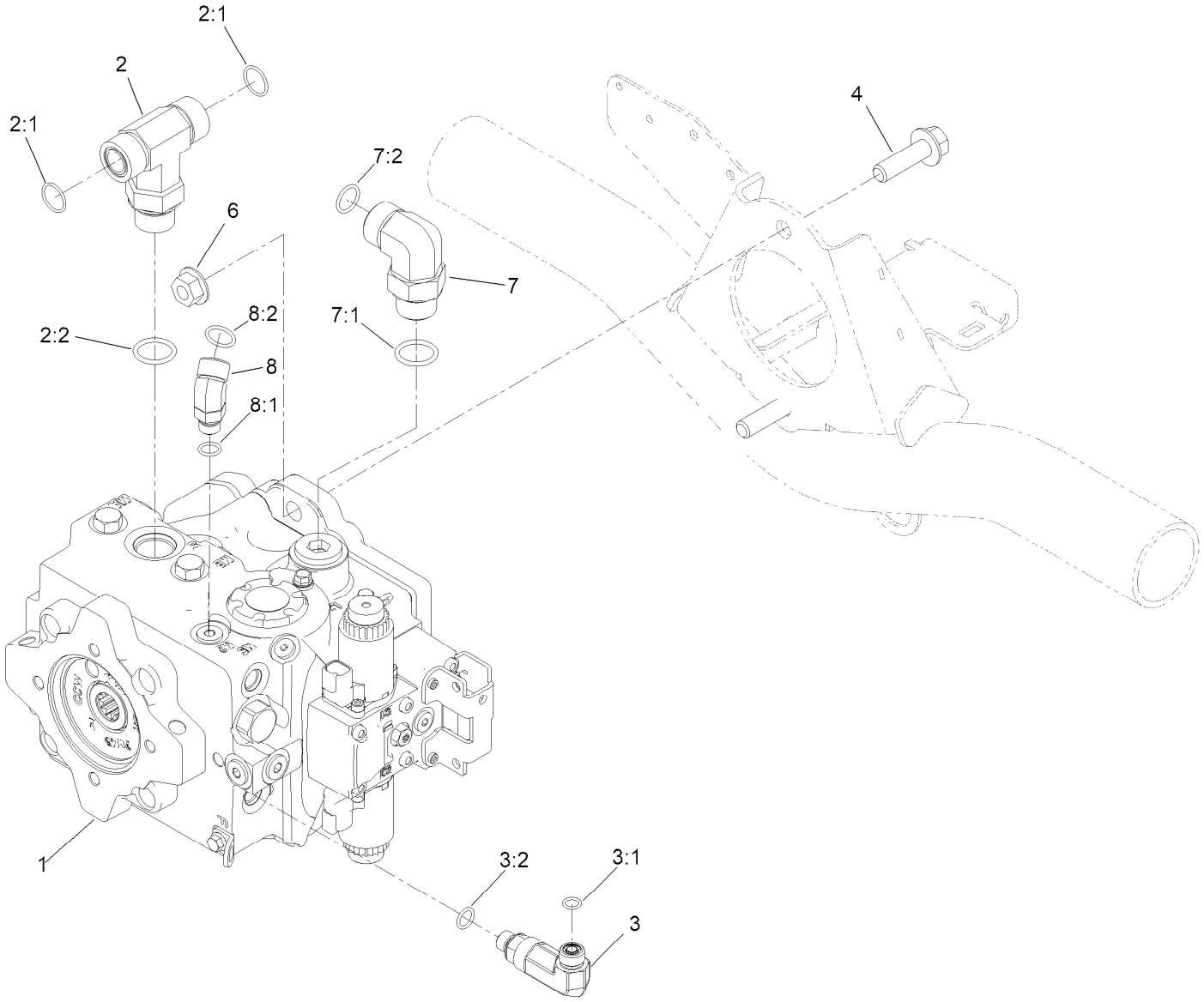

Traction Pump Mounting Assembly (continued)

Ref.	Part Number	Qty.	Description
1	144-2060	1	Pump-Hydraulic
2	104-4836	1	Fitting-Tee
2:1	237-58	2	O-Ring
2:2	237-81	1	O-Ring
3	145-2645	1	Fitting-Elbow 90 Long
3:1	237-22	1	O-Ring
3:2	237-42	1	O-Ring
4	130-6481	2	Screw-HHF
6	32128-49	2	Nut-HHF
7	340-142	1	Fitting-Elbow, 90 DEG
7:1	237-58	1	O-Ring
7:2	237-81	1	O-Ring
8	340-96	1	Adapter
8:1	237-30	1	O-Ring
8:2	237-42	1	O-Ring

Hydraulic Pump Assembly No. 144-2060

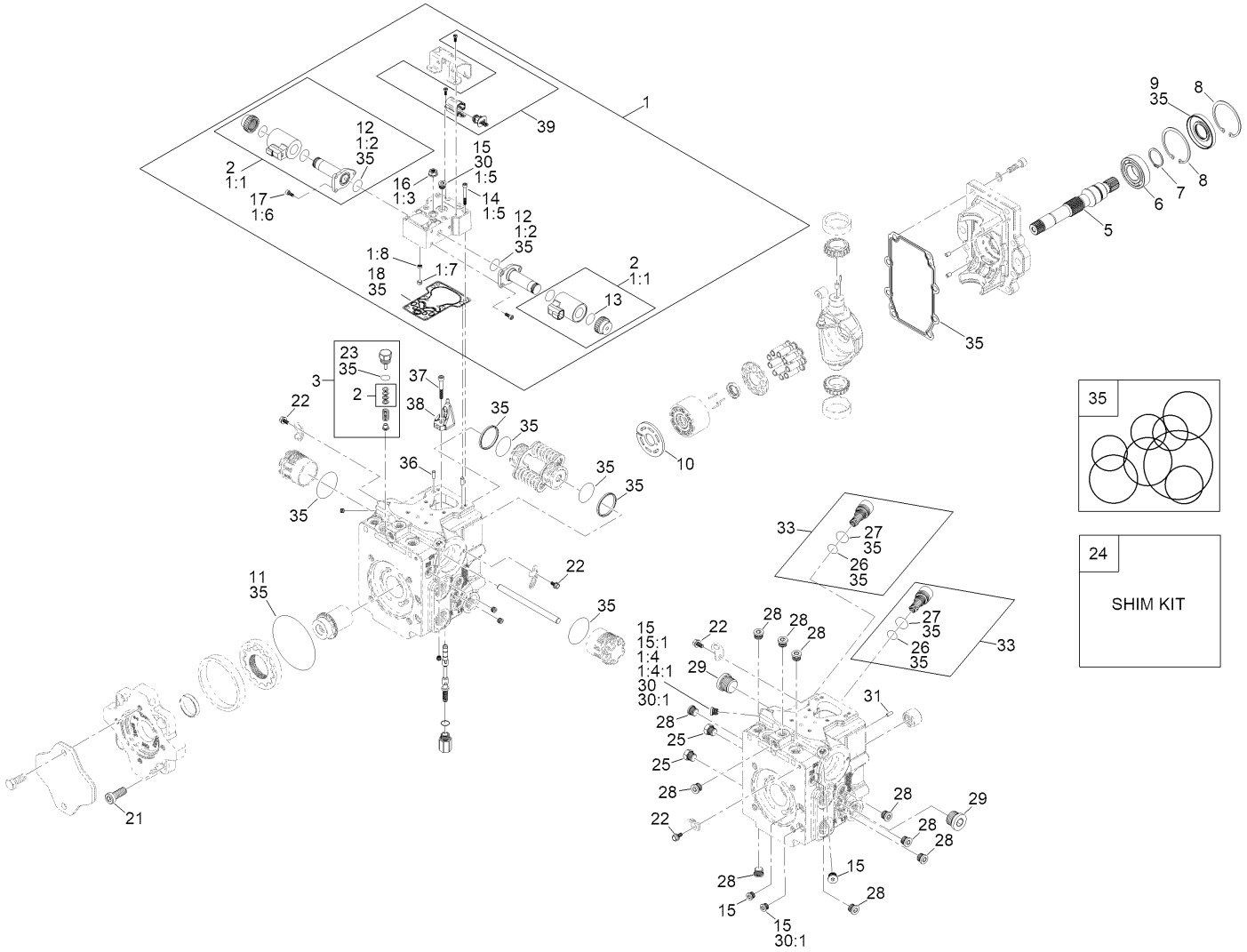

Hydraulic Pump Assembly No. 144-2060 (continued)

Ref.	Part Number	Qty.	Description
1	136-3209	1	Control Kit (12 Volt)
1:1	132-6204	2	Coil Kit
1:2	125-5288	2	O-Ring
1:3	125-5273	1	Nut-Seal
1:4	75-0170	1	Plug-Thread, Straight
1:4:1	92-8777	1	O-Ring
1:5	125-5274	6	Screw
1:6	125-5272	6	Screw
1:7	136-3213	1	Gasket-Control
1:8	136-3218	1	Sensor Kit
2	125-5294	2	Coil Kit
3	161-7203	1	Charge Relief Valve
5	139-4811	1	Shaft-13Tooth
6	139-4820	1	Bearing-Ball
7	139-4806	1	Ring-Retaining
8	139-4831	2	Ring-Retaining
9	161-7202	1	Oil Seal-Black
10	139-4813	1	Plate-Valve
11	161-7206	1	O-Ring As568-244 Nbr90
12	125-5288	2	O-Ring
13	131-7388	2	O-Ring
14	125-5274	6	Screw
15	75-0170	4	Plug-Thread, Straight
15:1	92-8777	1	O-Ring
16	161-7200	1	Nut-Hex Seal
17	125-5272	6	Screw
18	136-3213	1	Gasket-Control
21	125-5282	4	Screw
22	125-5270	4	Screw
23	28-3570	1	O-Ring
24	92-1353	1	Shim Kit
25	136-1026	1	Plug ASM
26	75-0240	2	O-Ring
27	84-0560	2	O-Ring
28	69-3080	10	Plug
29	69-3130	1	Plug
30	75-0170	4	Plug-Thread, Straight
30:1	92-8777	1	O-Ring
31	75-0510	1	Pin
33	161-7204	1	Valve-Scr Assembly 260 Bar (3770 PSI)
35	139-4828	1	Seal Kit
36	136-3215	2	Pin
37	136-3216	1	Screw, M6 X 35
38	136-3217	1	Link - Swashplate Feedback
39	136-3218	1	Sensor Kit ●

● Not illustrated

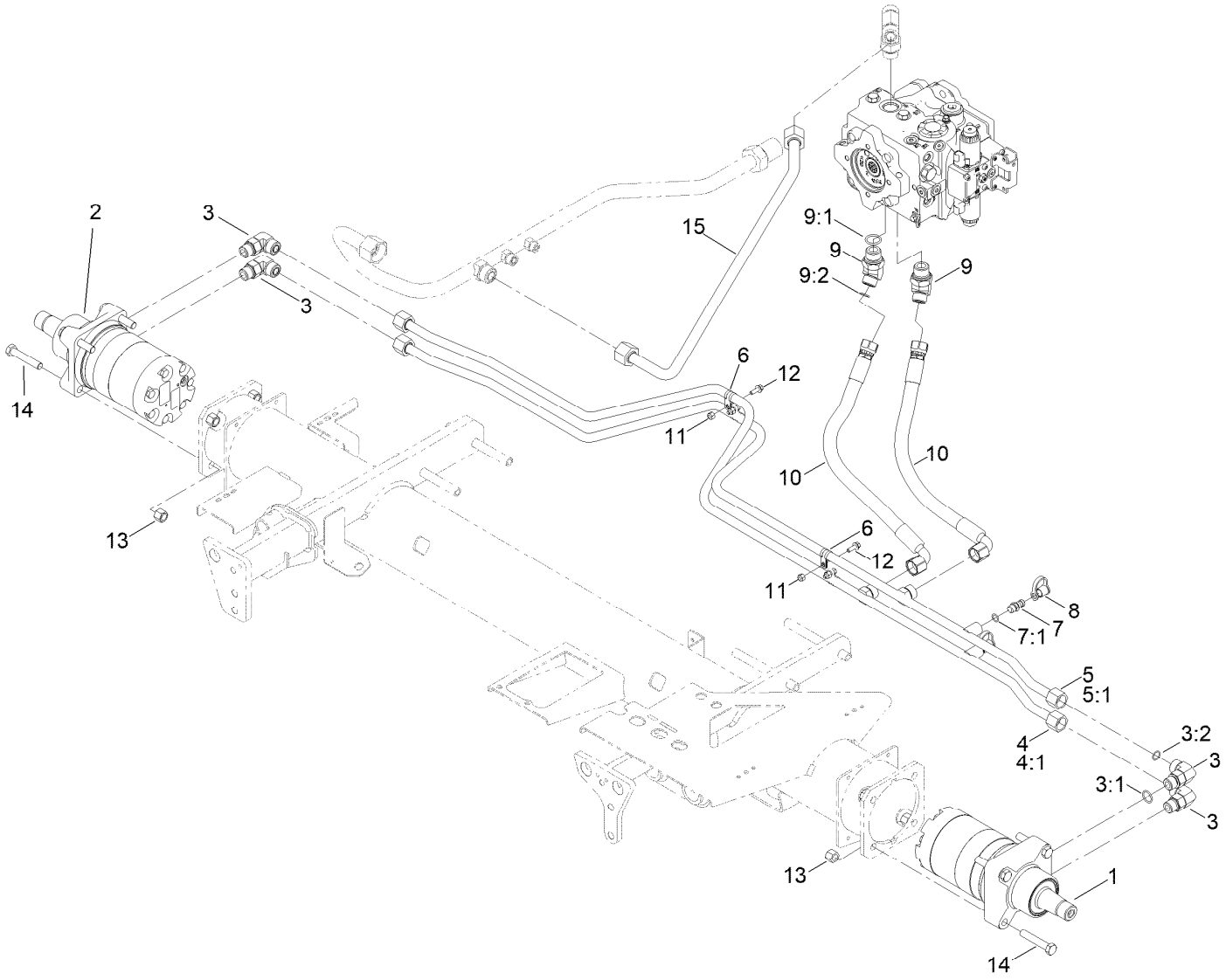

Traction Hydraulic Assembly

Ref.	Part Number	Qty.	Description
1	163-3542	1	Hydraulic Motor ASM
2	163-3543	1	Hydraulic Motor ASM
3	340-17	4	Fitting-Elbow, 90 DEG
3:1	237-65	1	O-Ring
3:2	237-80	1	O-Ring
4	108-7632	1	Hydraulic Tube ASM
4:1	237-65	1	O-Ring
5	108-7633	1	Tube ASM
5:1	237-65	1	O-Ring
6	2412-134	4	Clamp-R
7	59-7410	2	Fitting-Diagnostic

Ref.	Part Number	Qty.	Description
7:1	237-42	1	O-Ring
8	354-79	2	Cap-Dust
9	340-156	2	Fitting-Elbow 45
9:1	237-65	1	O-Ring
9:2	237-81	1	O-Ring
10	108-1679	2	Hose-HYD
11	3296-42	4	Nut-Lock, NI
12	3234-4	4	Screw-HHF
13	3296-23	8	Nut-Lock, NI
14	325-11	8	Screw-HH
15	145-2560	1	Hydraulic Tube ASM

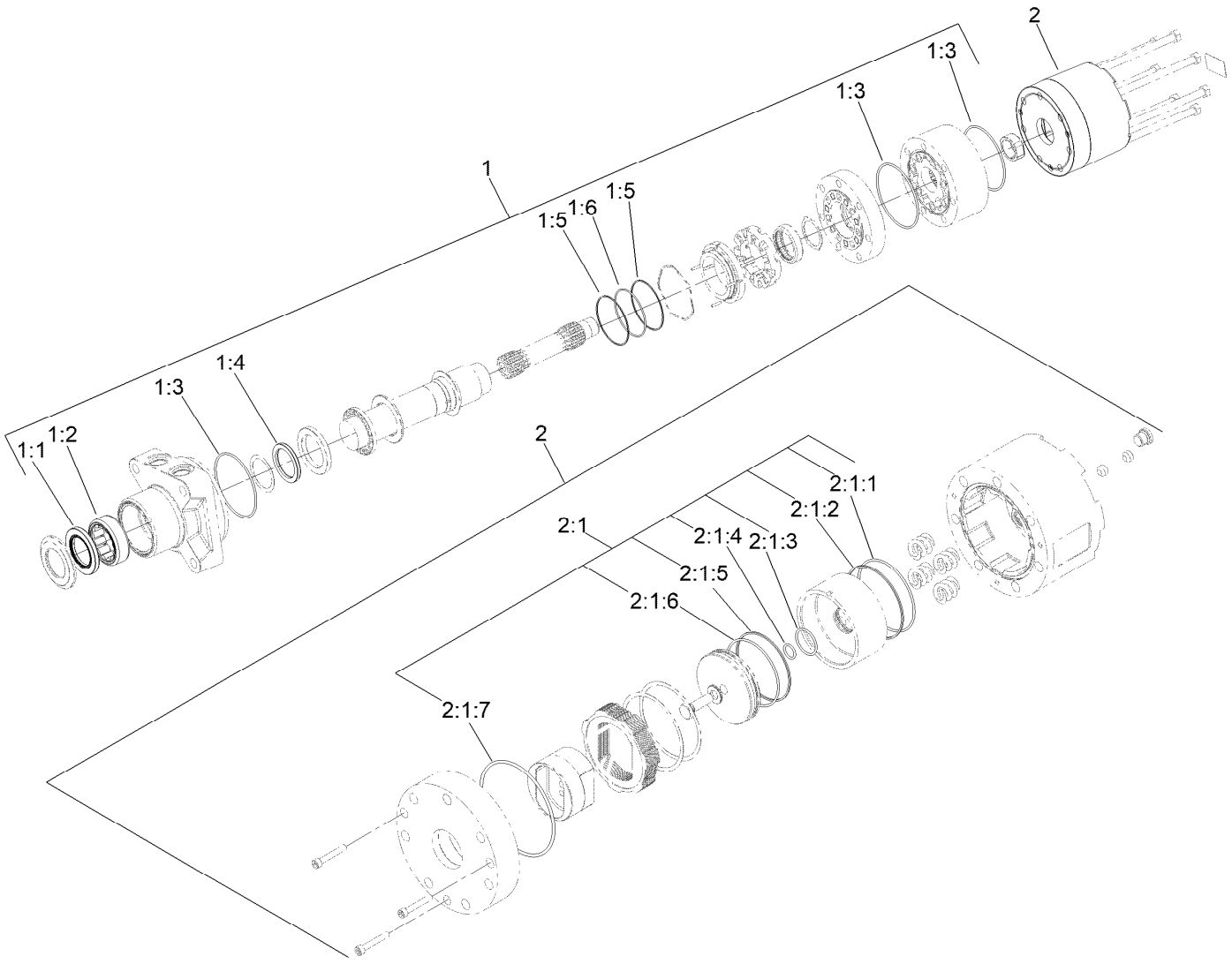

Hydraulic Motor Assembly No. 163-3542

Ref.	Part Number	Qty.	Description
1	161-7208	1	Seal Kit
1:1	161-7209	1	Seal, Grease ●
1:2	161-7210	1	Shell, Bearing ●
1:3	161-7211	3	O-Ring ●
1:4	161-7212	1	Shaft Seal (HP) ●
1:5	161-7213	2	Back-Up Ring ●
1:6	161-7214	1	O-Ring ●
2	163-2617	1	Brake Housing ASM
2:1	163-2627	1	Seal Kit-Brake ASM

Ref.	Part Number	Qty.	Description
2:1:1	161-8367	1	O-Ring
2:1:2	161-8368	1	Backup Ring
2:1:3	161-8369	1	O-Ring
2:1:4	161-8370	1	O-Ring
2:1:5	161-8371	1	Backup Ring
2:1:6	161-8372	1	O-Ring
2:1:7	161-7211	1	O-Ring
2:1:8	161-8373	1	O-Ring ●

● Not illustrated

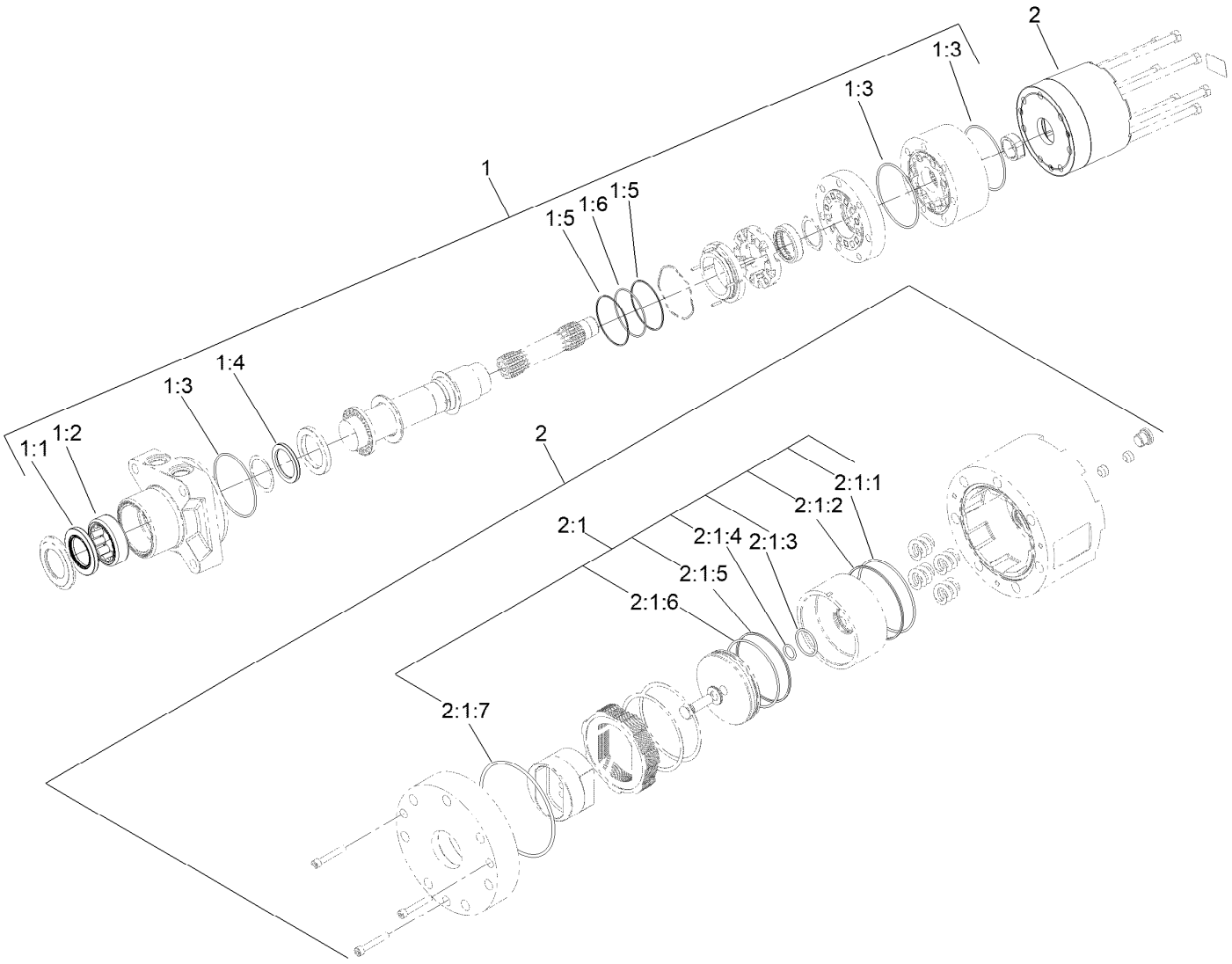

Hydraulic Motor Assembly No. 163-3543

Ref.	Part Number	Qty.	Description
1	161-7208	1	Seal Kit
1:1	161-7209	1	Seal, Grease ●
1:2	161-7210	1	Shell, Bearing ●
1:3	161-7211	3	O-Ring ●
1:4	161-7212	1	Shaft Seal (HP) ●
1:5	161-7213	2	Back-Up Ring ●
1:6	161-7214	1	O-Ring ●
2	163-2617	1	Brake Housing ASM
2:1	163-2627	1	Seal Kit-Brake ASM

Ref.	Part Number	Qty.	Description
2:1:1	161-8367	1	O-Ring
2:1:2	161-8368	1	Backup Ring
2:1:3	161-8369	1	O-Ring
2:1:4	161-8370	1	O-Ring
2:1:5	161-8371	1	Backup Ring
2:1:6	161-8372	1	O-Ring
2:1:7	161-7211	1	O-Ring
2:1:8	161-8373	1	O-Ring ●

● Not illustrated

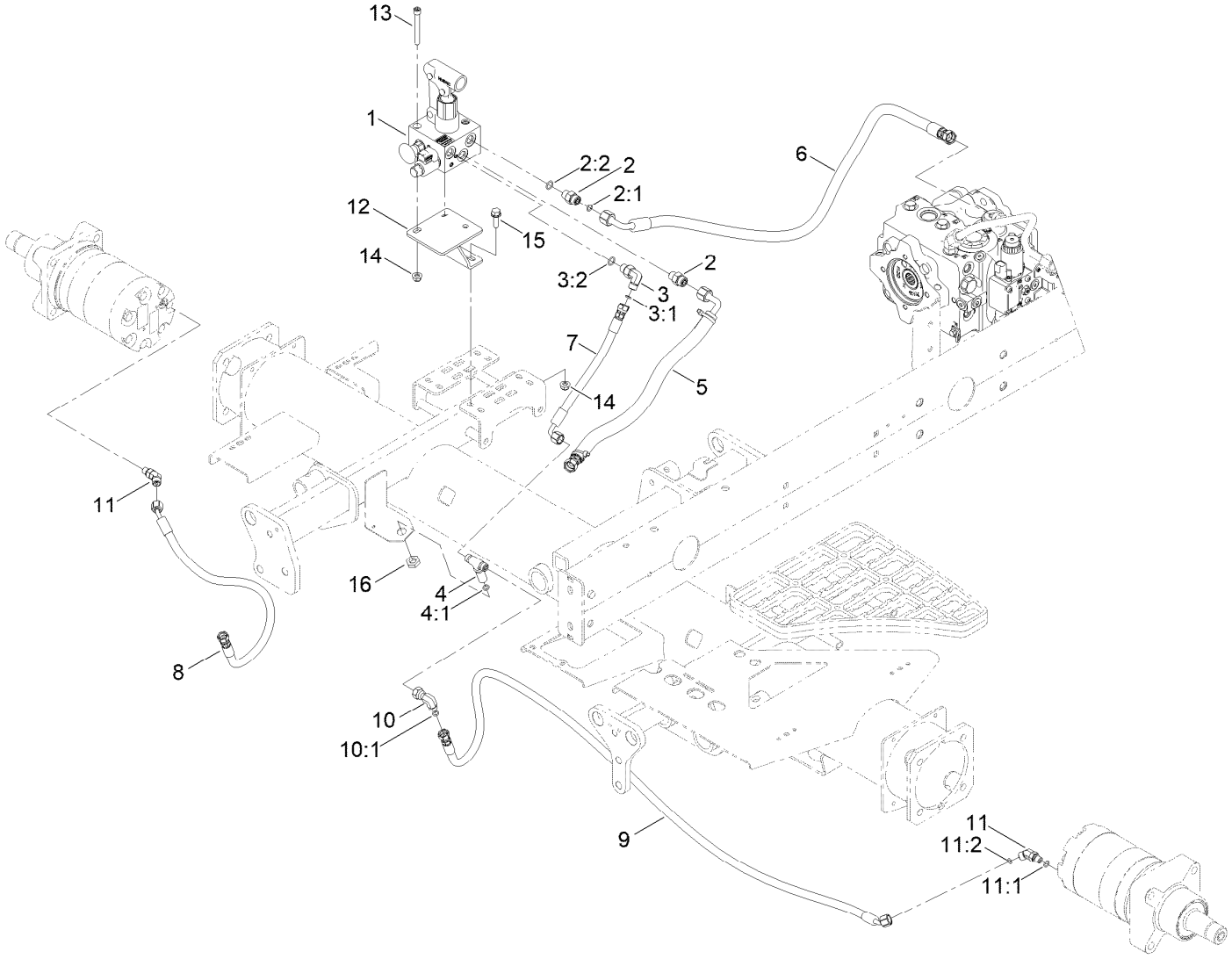

Hydraulic Brake Assembly

Ref.	Part Number	Qty.	Description
1	139-6046	1	Manifold-Brake Release
2	340-2	2	Fitting-Straight
2:1	237-22	1	O-Ring
2:2	237-42	1	O-Ring
3	340-82	1	Fitting-Elbow, 90 DEG
3:1	237-42	1	O-Ring
3:2	237-21	1	O-Ring
4	140-7452	1	Fitting-Tee, Bulkhead
4:1	237-21	3	O-Ring
5	163-3508	1	Hose ASM-HYD
6	145-2455	1	Hose ASM-Hydraulic
7	121-4455	1	Hose-HYD
8	145-2599	1	Hose ASM-HYD HP

Ref.	Part Number	Qty.	Description
9	115-2029	1	HYD Hose ASM
10	92-2745	1	Elbow-90
10:1	237-21	1	O-Ring
11	340-103	2	Fitting-HYD, 45 DEG
11:1	237-78	1	O-Ring
11:2	237-21	1	O-Ring
12	145-2459-03	1	Mount - Brake Release [black]
13	3274-40	3	Screw-HSH
14	119-4041	5	Nut-HF
15	3234-29	2	Screw-HHF
16	340-78	1	Nut-Lock

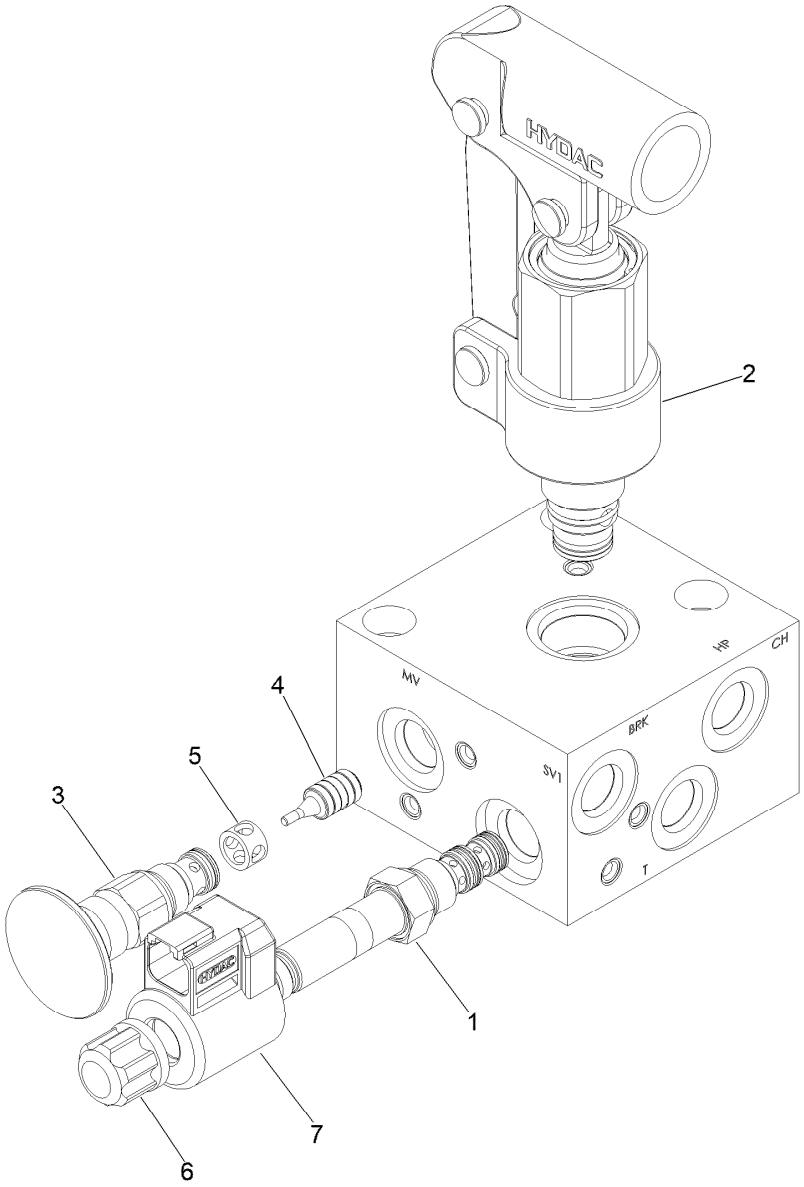

Brake Release Manifold Assembly No. 139-6046

Ref.	*Part Number*	*Qty.*	*Description*
1	145-2563	1	Directional Valve, 3W/2P
2	145-2564	1	Hand Pump
3	145-2565	1	Manual Valve, N.O.
4	145-2566	1	Pilot Piston Assy, Rvs06
5	145-2567	1	Spacer
6	145-2569	1	Coil Nut, Tall (06 Valves)
S1	145-2568	1	Coil 12Dn01-32-1329

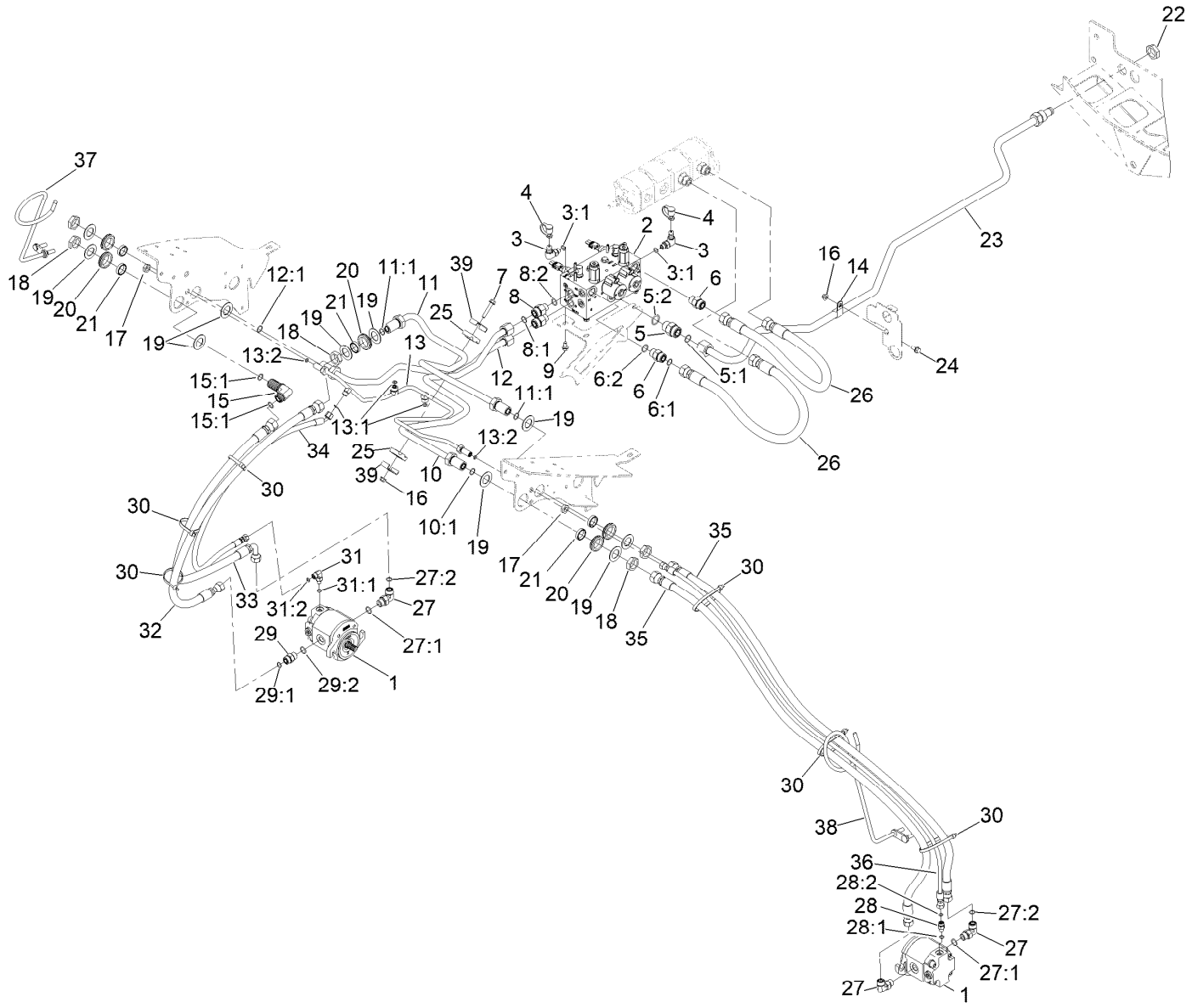

No. 1, 4 and 5 Reel Drive Hydraulic Assembly

Ref.	Part Number	Qty.	Description
1	120-6272	3	HYD Motor ASM
2	121-5628	1	Hydraulic Manifold ASM
3	59-7410	2	Fitting-Diagnostic
3:1	237-42	1	O-Ring
4	354-79	2	Cap-Dust
5	340-9	1	Fitting-STR
5:1	237-58	1	O-Ring
5:2	237-81	1	O-Ring
6	340-7	2	Fitting-Straight
6:1	237-65	1	O-Ring
6:2	237-80	1	O-Ring
7	94-5780	1	Screw-HWH
8	340-155	2	Fitting-Straight
8:1	237-79	1	O-Ring
8:2	237-151	1	O-Ring
9	3234-14	3	Screw-HHF
10	145-2530	1	Hydraulic Tube ASM
10:1	237-65	1	O-Ring
11	117-0137	1	Tube ASM
11:1	237-65	2	O-Ring
12	145-2529	1	Hydraulic Tube ASM

Ref.	Part Number	Qty.	Description
12:1	237-65	1	O-Ring
13	163-3513	1	Hydraulic Tube ASM
13:1	237-22	2	O-Ring
13:2	237-21	3	O-Ring
14	2412-4	1	Clamp-R
15	340-72	1	Fitting-Bulkhead, 90 DEG
15:1	237-65	2	O-Ring
16	119-4041	2	Nut-HF
17	340-78	2	Nut-Lock
18	340-74	5	Nut-Lock, Bulkhead
19	69-9010	10	Washer
20	240-3	5	Grommet-Rubber
21	125-1984	5	Spacer
22	340-126	1	Nut-Bulkhead
23	108-1700	1	Tube ASM
24	3234-5	1	Screw-HHF
25	56-7970	2	Clamp-Tube
26	108-1686	2	Hose-HYD
27	340-98	5	Fitting-Elbow, 90 DEG
27:1	237-79	1	O-Ring
27:2	237-30	1	O-Ring

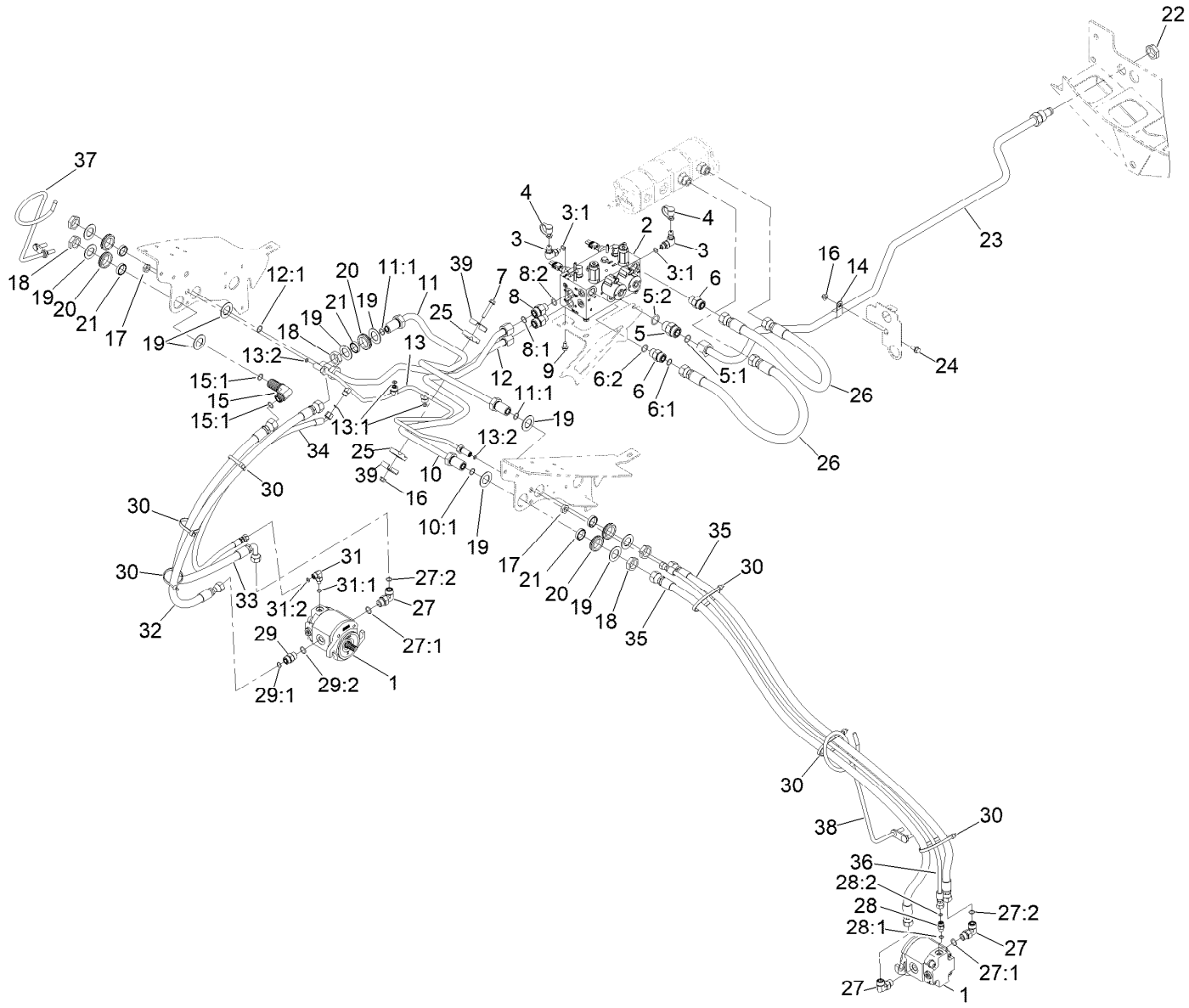

No. 1, 4 and 5 Reel Drive Hydraulic Assembly (continued)

Ref.	Part Number	Qty.	Description
28	340-92	2	Fitting-Straight
28:1	237-78	1	O-Ring
28:2	237-21	1	O-Ring
29	340-4	1	Fitting-Straight
29:1	237-30	1	O-Ring
29:2	237-79	1	O-Ring
30	3334-945	9	Tie-Cable
31	340-132	1	Fitting-Elbow, 90 DEG
31:1	237-78	1	O-Ring
31:2	237-21	1	O-Ring
32	114-0633	1	Hose-HYD
33	117-5190	1	Hose-HYD
34	140-7456	1	Hose ASM
35	117-5188	4	Hose-HYD
36	106-3680	2	Hose-HYD
37	139-5995	1	Guide-Hose, RH
38	139-5996	1	Hose Guide ASM-LH
39	119-1419	2	Plate-Clamp

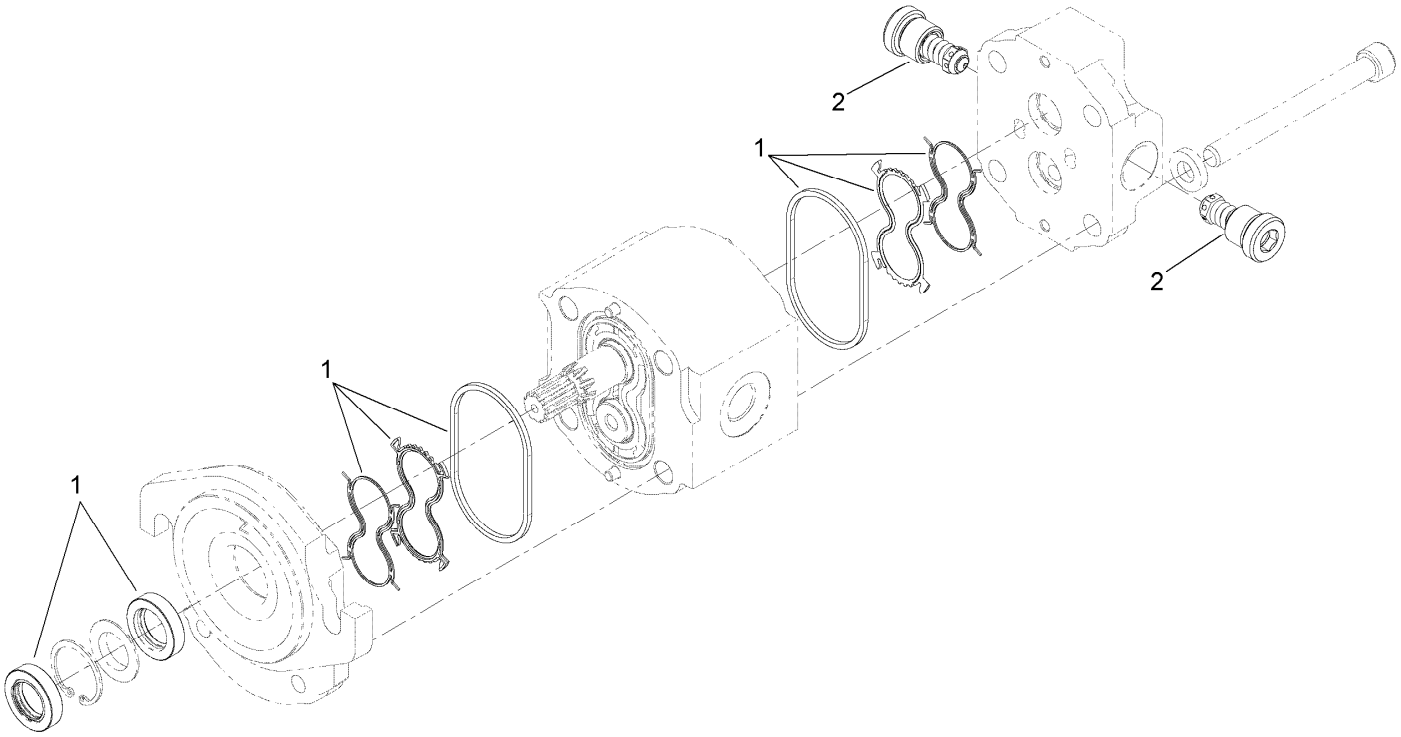

Hydraulic Motor Assembly No. 120-6272

Ref.	*Part Number*	*Qty.*	*Description*
1	145-2786	1	Seal Kit
2	117-5107	1	Valve-Check

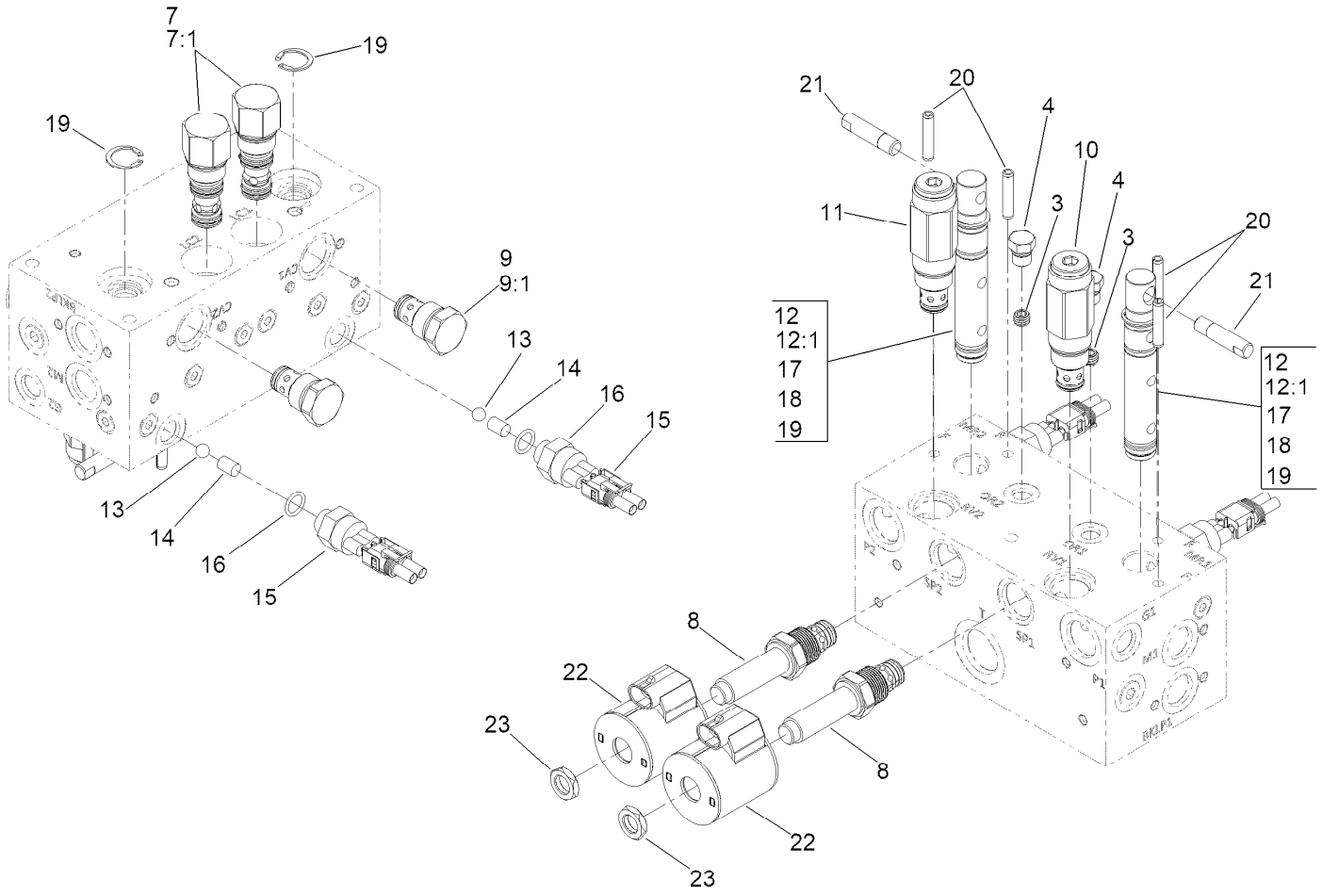

Manifold Assembly No. 121-5628

Ref.	Part Number	Qty.	Description
3	110-8883	2	Plug-Orifice (0.040)
4	117-0115	2	Plug
7	120-1693	2	Compensator-Pressure
7:1	119-2159	1	Seal Kit
8	138-6961	2	Valve-Proportional, NC
9	110-8881	2	Valve-Check
9:1	105-9159	1	Seal Kit ●
10	138-6962	1	Valve-Relief, 2500 PSI
11	138-6963	1	Valve-Relief, 3500 PSI
12	117-0108	2	Spool-Rotary
12:1	117-0109	1	Seal Kit

Ref.	Part Number	Qty.	Description
13	117-4605	2	Ball-SS
14	120-1650	2	Pin
15	72-4310	2	Switch-Ball
16	110-8757	2	O-Ring
17	117-4606	6	O-Ring
18	112-6534	4	Ring-Back Up
19	112-6532	4	Ring-Retaining
20	112-6531	4	Pin-Spring
21	110-8758	2	Handle-Spool
22	110-6344	2	Coil-12V, DC
23	110-2634	2	Nut-Coil

● Not illustrated

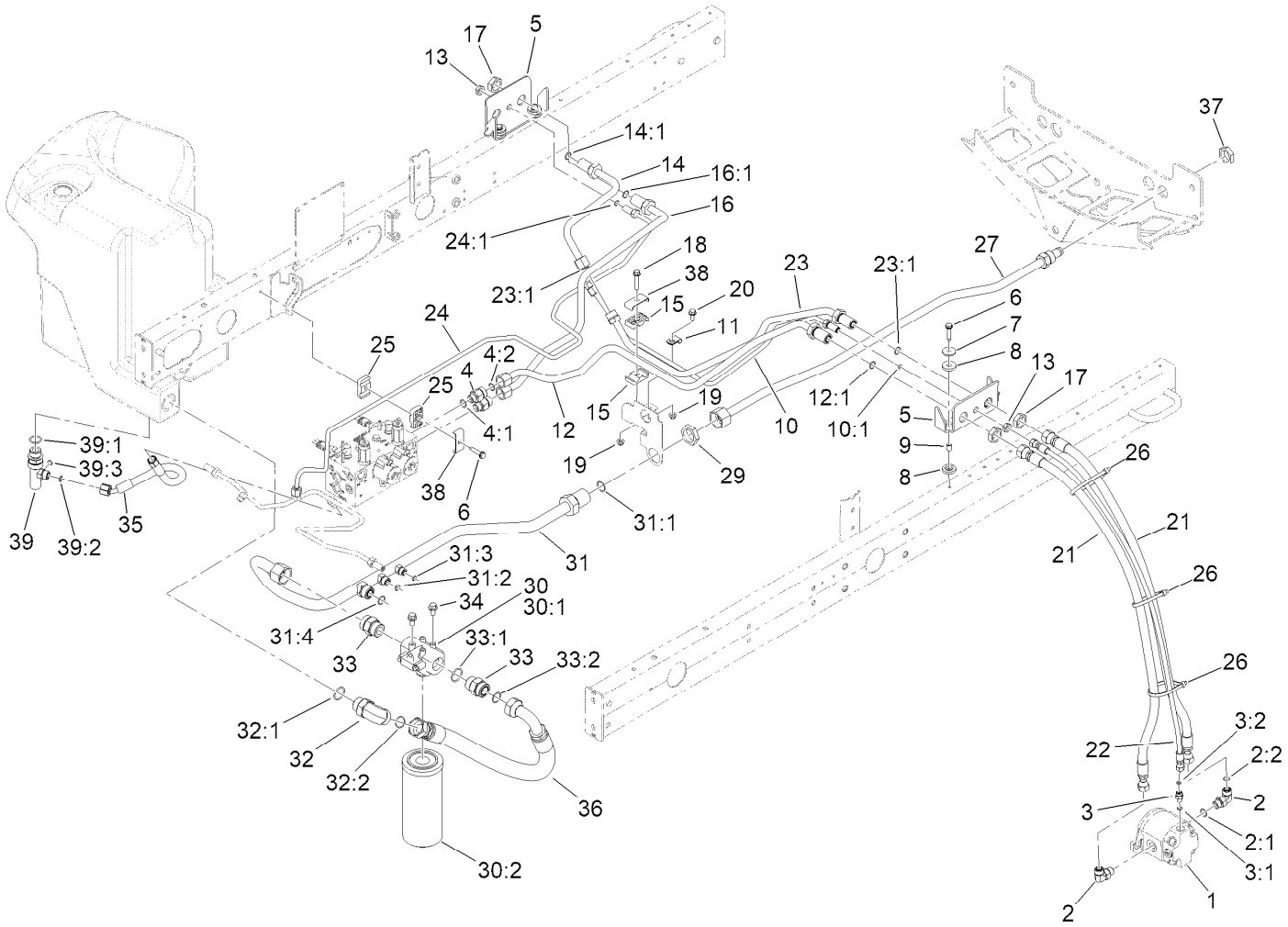

No. 2 and 3 Reel Drive Hydraulic Assembly

Ref.	Part Number	Qty.	Description
1	120-6272	2	HYD Motor ASM
2	340-98	4	Fitting-Elbow, 90 DEG
2:1	237-79	1	O-Ring
2:2	237-30	1	O-Ring
3	340-92	2	Fitting-Straight
3:1	237-78	1	O-Ring
3:2	237-21	1	O-Ring
4	340-155	2	Fitting-Straight
4:1	237-79	1	O-Ring
4:2	237-151	1	O-Ring
5	117-0174-03	2	Bracket-Bulkhead
6	32144-57	5	Screw-Thd Roll
7	105-3048	4	Washer-Flat
8	240-11	8	Bushing-Flange
9	99-8611	4	Spacer
10	145-2532	1	Hydraulic Tube ASM
10:1	237-21	1	O-Ring
11	2412-113	1	Clamp-R

Ref.	Part Number	Qty.	Description
12	145-2528	1	Hydraulic Tube ASM
12:1	237-65	1	O-Ring
13	340-78	2	Nut-Lock
14	117-0140	1	Tube ASM
14:1	237-65	1	O-Ring
15	56-7971	2	Clamp-Tube
16	145-2527	1	Hydraulic Tube ASM
16:1	237-65	1	O-Ring
17	340-74	4	Nut-Lock, Bulkhead
18	94-5780	1	Screw-HWH
19	119-4041	2	Nut-HF
20	3234-5	1	Screw-HHF
21	114-0633	4	Hose-HYD
22	98-4590	2	Hose-HYD
23	117-0177	1	Tube ASM
23:1	237-65	2	O-Ring
24	145-2533	1	Hydraulic Tube ASM
24:1	237-21	1	O-Ring

● Not illustrated

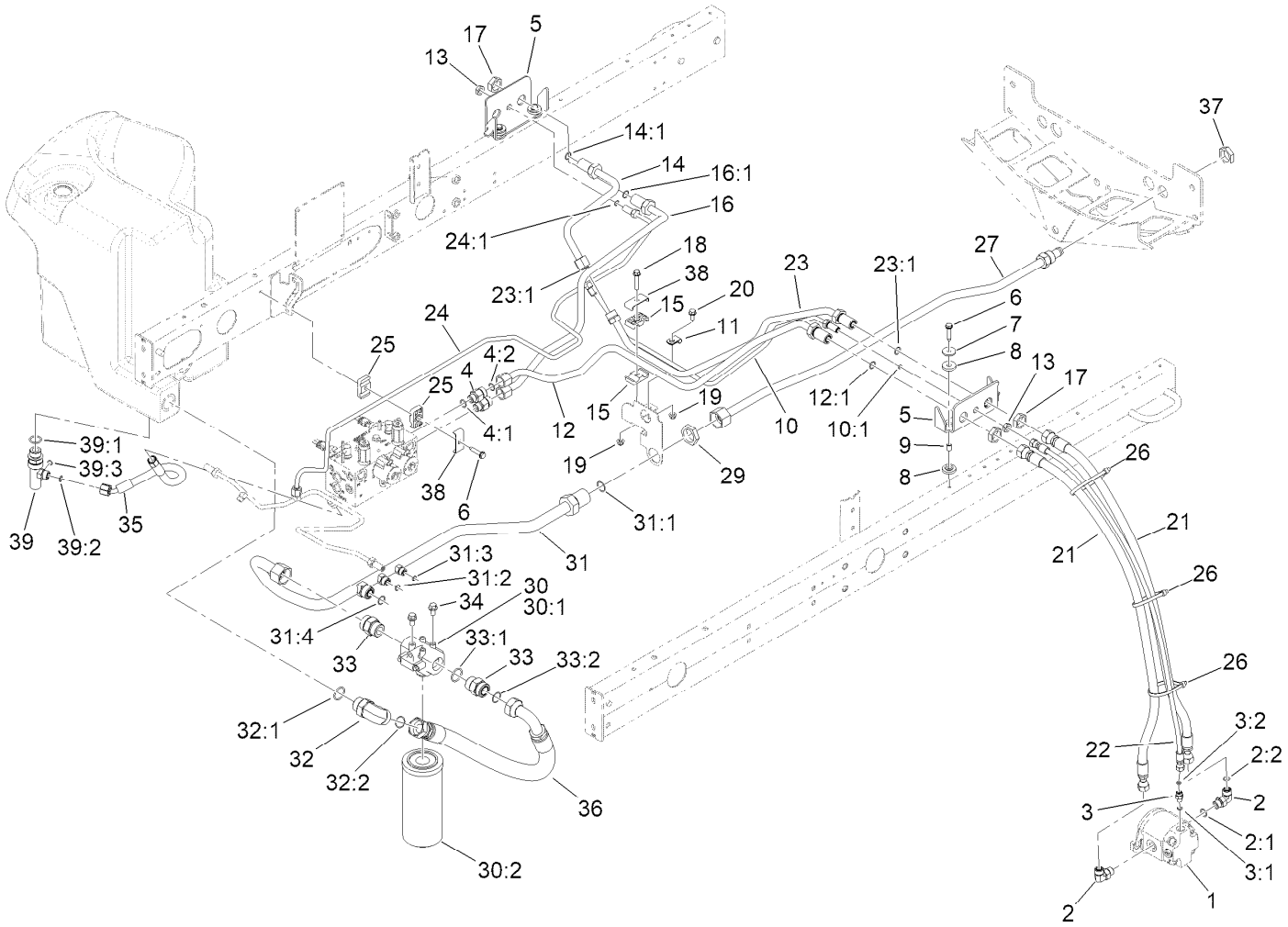

No. 2 and 3 Reel Drive Hydraulic Assembly (continued)

Ref.	Part Number	Qty.	Description
24:2	237-22	1	O-Ring ●
25	56-7972	2	Clamp-Tube
26	3334-945	6	Tie-Cable
27	108-1691	1	Tube ASM
29	340-128	1	Nut-Bulkhead
30	98-3923	1	Oil Filter ASM
30:1	104-0080	1	Filter Head ASM
30:2	94-2621	1	Element-Filter
31	144-2055	1	Tube ASM-Hydraulic
31:1	340-65	1	O-Ring
31:2	237-30	1	O-Ring
31:3	237-22	1	O-Ring
31:4	237-58	1	O-Ring
32	340-129	1	Fitting-Elbow, 90 DEG

Ref.	Part Number	Qty.	Description
32:1	237-146	1	O-Ring
32:2	340-65	1	O-Ring
33	104-3797	2	Fitting-Straight
33:1	237-146	1	O-Ring
33:2	340-65	1	O-Ring
34	3234-1	2	Screw-HHF
35	163-3514	1	Hose ASM-HYD
36	108-1689	1	Hose-HYD
37	340-126	1	Nut-Bulkhead
38	119-1419	2	Plate-Clamp
39	144-2080	1	Fitting-Manifold
39:1	237-81	1	O-Ring
39:2	237-30	1	O-Ring
39:3	237-22	1	O-Ring

● Not illustrated

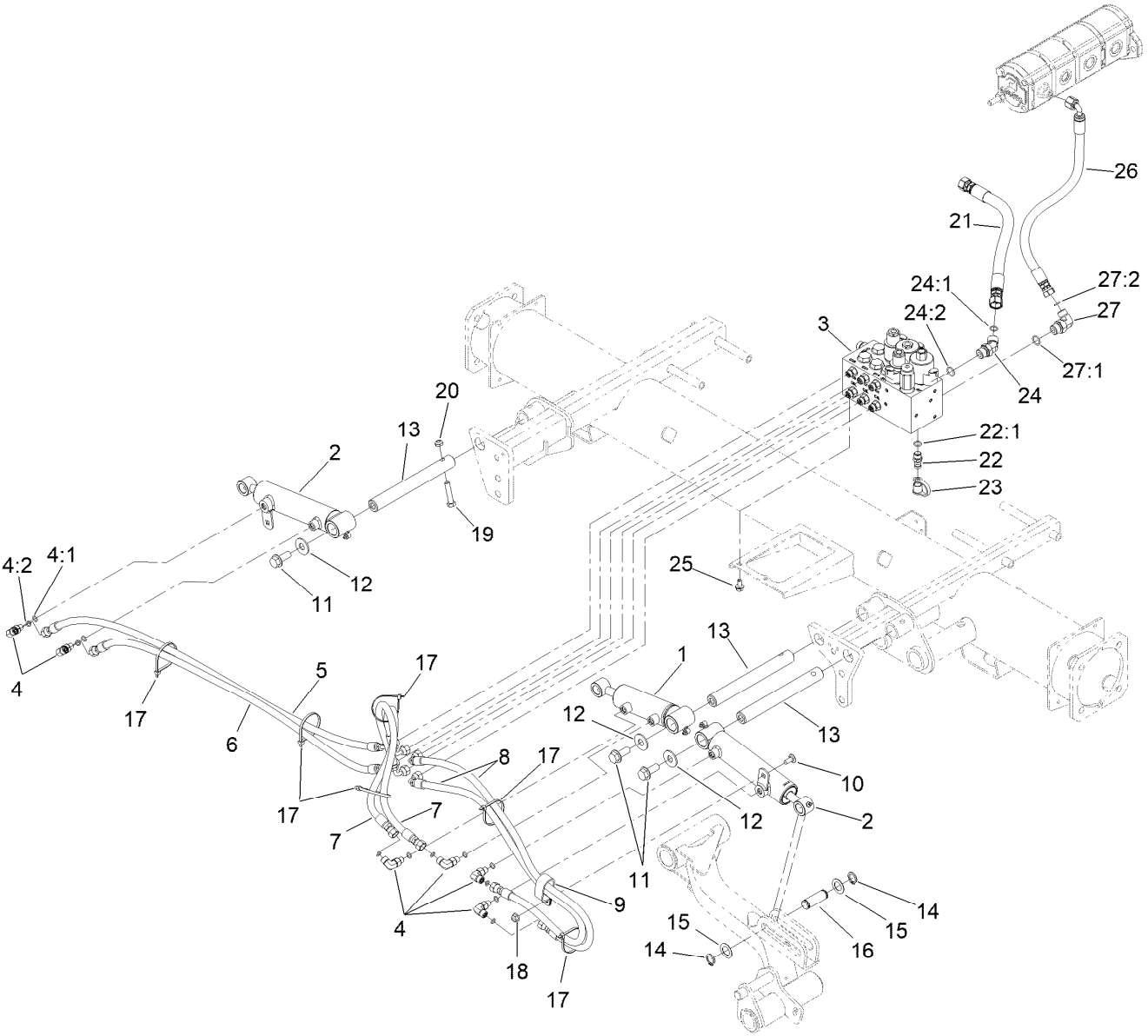

No. 1, 4 and 5 Lift Arm Hydraulic Assembly

Ref.	Part Number	Qty.	Description
1	163-2624	1	Cylinder-Hydraulic
2	163-3534	2	Cylinder-Hydraulic
3	105-7577	1	HYD Lift Block Manifold ASM
4	340-132	6	Fitting-Elbow, 90 DEG
4:1	237-78	1	O-Ring
4:2	237-21	1	O-Ring
5	106-3692	1	Hose-HYD
6	106-3693	1	Hose-HYD
7	93-6887	2	Hose-HYD
8	85-4940	2	Hose-HYD
9	2412-137	1	Clamp-R, Double
10	137-3061	1	Bolt-CARR
11	3234-38	3	Screw-HHF
12	3256-6	3	Washer-Flat
13	117-0148	3	Pin-Cylinder
14	32120-93	6	Ring-Retaining
15	3-6498	6	Washer-Thrust
16	104-0046	3	Pin-Slide, Cylinder
17	3290-379	6	Tie-Cable
18	119-4041	1	Nut-HF
19	323-9	3	Screw-HH
20	3296-59	3	Nut-Lock, NI
21	117-0729	1	Hose ASM
22	59-7410	1	Fitting-Diagnostic
22:1	237-42	1	O-Ring
23	354-79	1	Cap-Dust
24	340-101	1	Fitting-HYD, 45 DEG
24:1	237-30	1	O-Ring
24:2	237-79	1	O-Ring
25	3234-14	2	Screw-HHF
26	145-2585	1	Hose ASM-HYD
27	340-18	1	Fitting-HYD, 90 DEG
27:1	237-79	1	O-Ring
27:2	237-22	1	O-Ring

Hydraulic Cylinder Assembly No. 163-2624

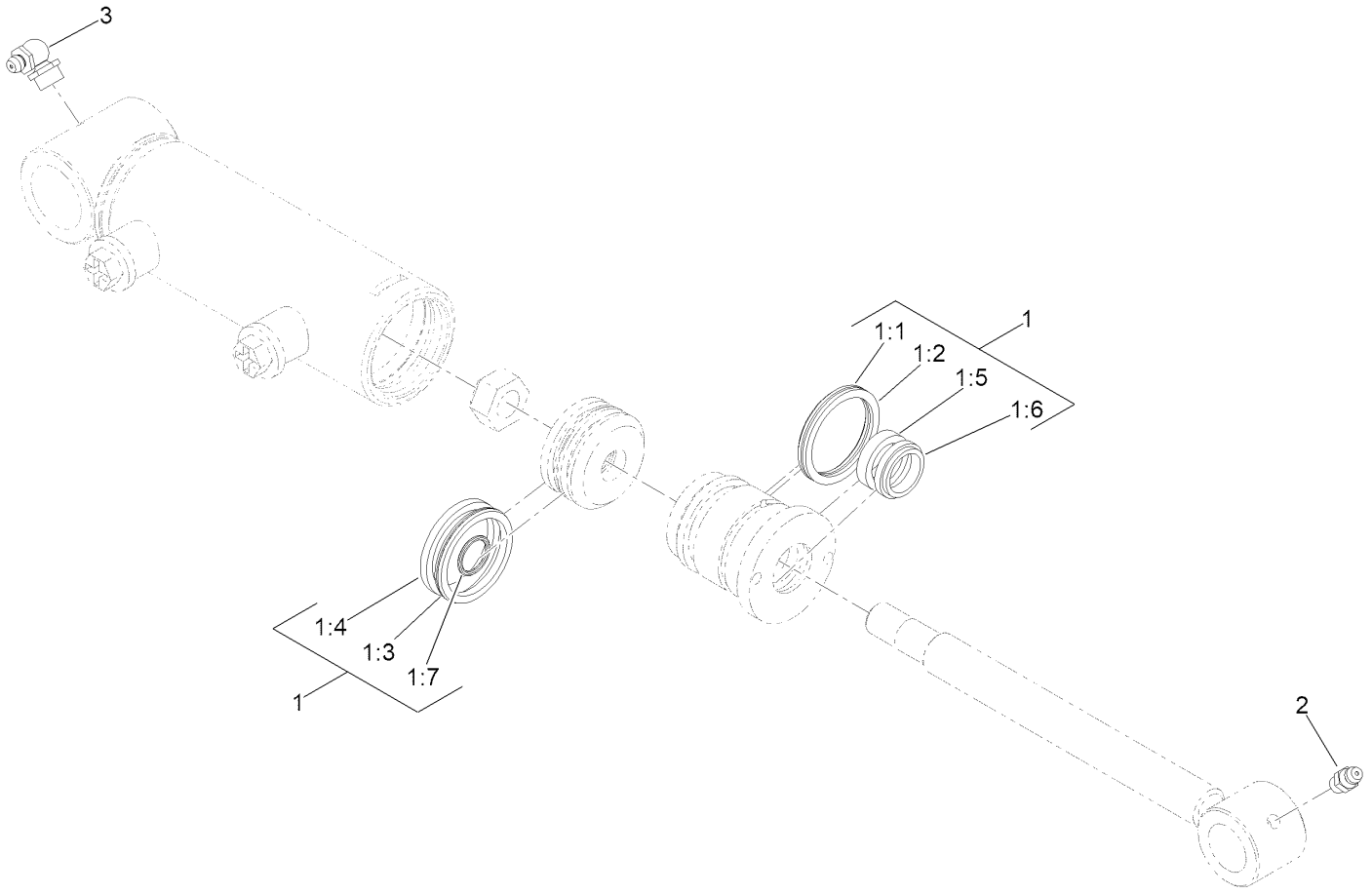

Hydraulic Cylinder Assembly No. 163-2624 (continued)

Ref.	Part Number	Qty.	Description
1	163-3529	1	Seal Kit
1:1		1	O-Ring ●
1:2		1	Backup ●
1:3		1	Pps Seal ●
1:4		1	Wear Ring-Ht ●
1:5		1	Bt Seal ●
1:6		1	Dust Seal-Dt ●
1:7		1	O-Ring ●
2	302-5	1	Fitting-Grease
3	302-33	1	Fitting-Grease

● Not serviced separately

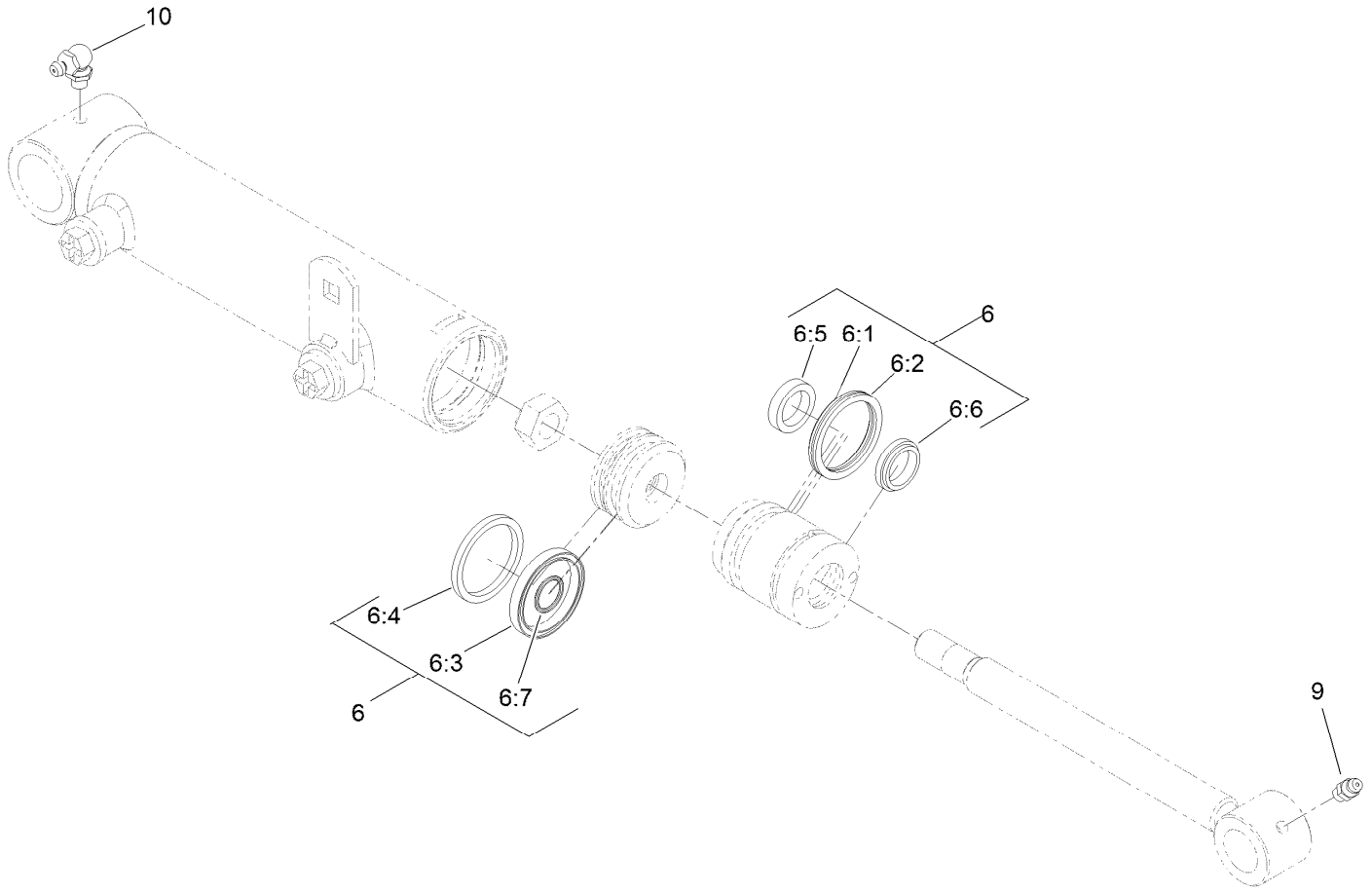

Hydraulic Cylinder Assembly No. 163-3534

Ref.	*Part Number*	*Qty.*	*Description*
6	163-3529	1	Seal Kit
6:1		1	O-Ring ●
6:2		1	Backup ●
6:3		1	Pps Seal ●
6:4		1	Wear Ring-Ht ●
6:5		1	Bt Seal ●
6:6		1	Dust Seal-Dt ●
6:7		1	O-Ring ●
9	302-5	1	Fitting-Grease
10	302-60	1	Fitting-Grease

● Not serviced separately

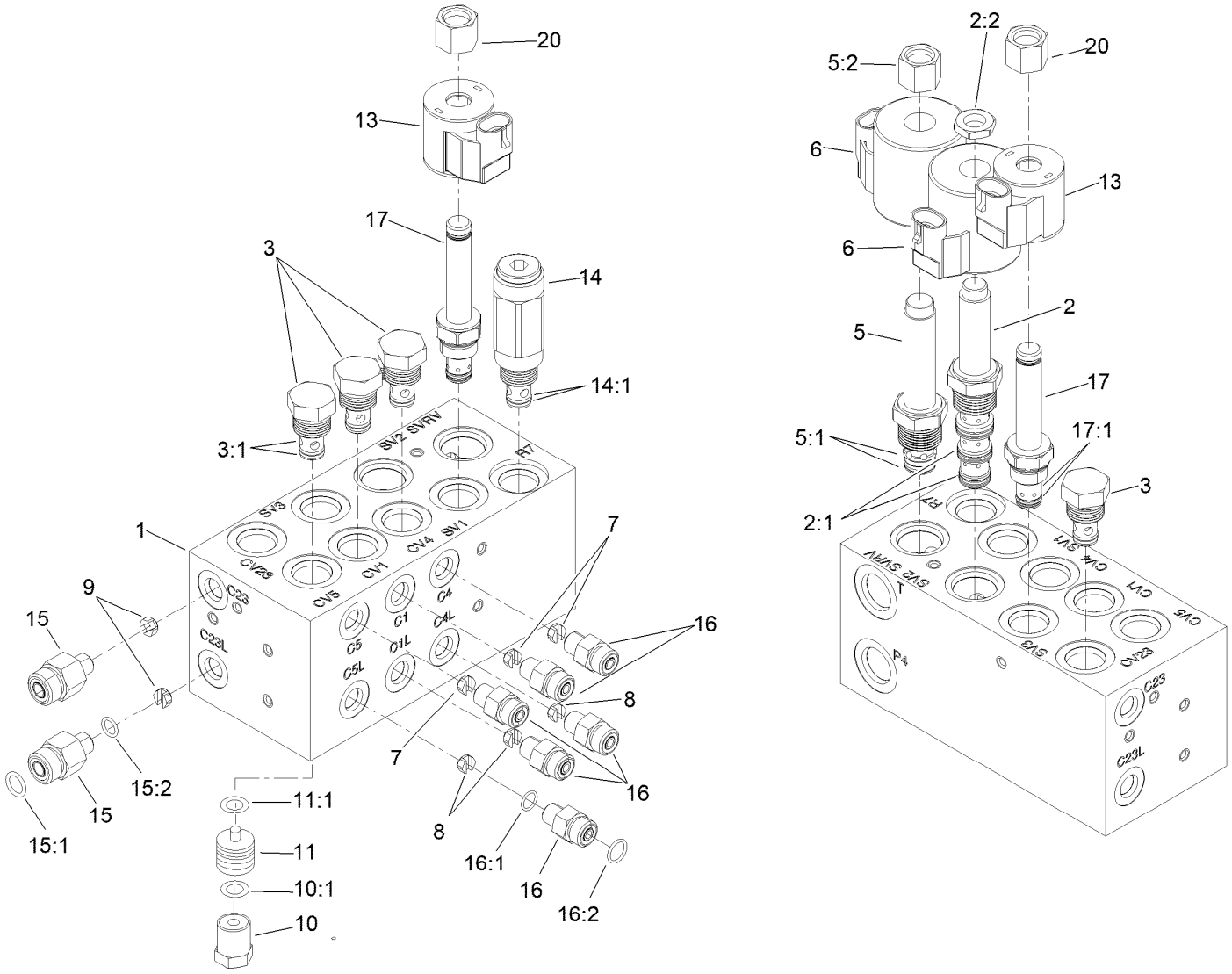

Hydraulic Manifold Block Assembly No. 105-7577

Ref.	Part Number	Qty.	Description
1		1	Block-Manifold ●
2	110-8906	1	Valve-Solenoid
2:1	110-8908	1	Spool Valve Seal Kit
2:2	110-2634	1	Nut-Coil
3	110-9006	4	Valve-Check
3:1	105-9156	1	Seal Kit
5	110-8905	1	Valve-Relief, Solenoid
5:1	110-6316	1	Seal Kit
5:2	130-8180	1	Nut-Coil (9/16-24 Unef-2B)
6	110-6344	2	Coil-12V, DC
7	110-8904	3	Orifice-Control, Flow (0.028)
8	110-8903	3	Orifice-Control, Flow (0.055)
9	110-8902	2	Orifice-Control, Flow (0.046)
10	354-70	4	Plug-Hex, Hollow
10:1	237-80	1	O-Ring

Ref.	Part Number	Qty.	Description
11	110-8901	4	Piston-Pilot
11:1	110-8900	1	O-Ring
13	110-0497	2	Coil-Solenoid
14	110-8899	1	Valve-Relief
14:1	105-9156	1	Seal Kit
15	340-88	2	Fitting-Straight
15:1	237-22	1	O-Ring
15:2	237-78	1	O-Ring
16	340-92	6	Fitting-Straight
16:1	237-78	1	O-Ring
16:2	237-21	1	O-Ring
17	147-3090	2	Valve-Solenoid
17:1	107-7527	1	Seal Kit
20	107-7812	2	Nut-Solenoid

● Not serviced separately

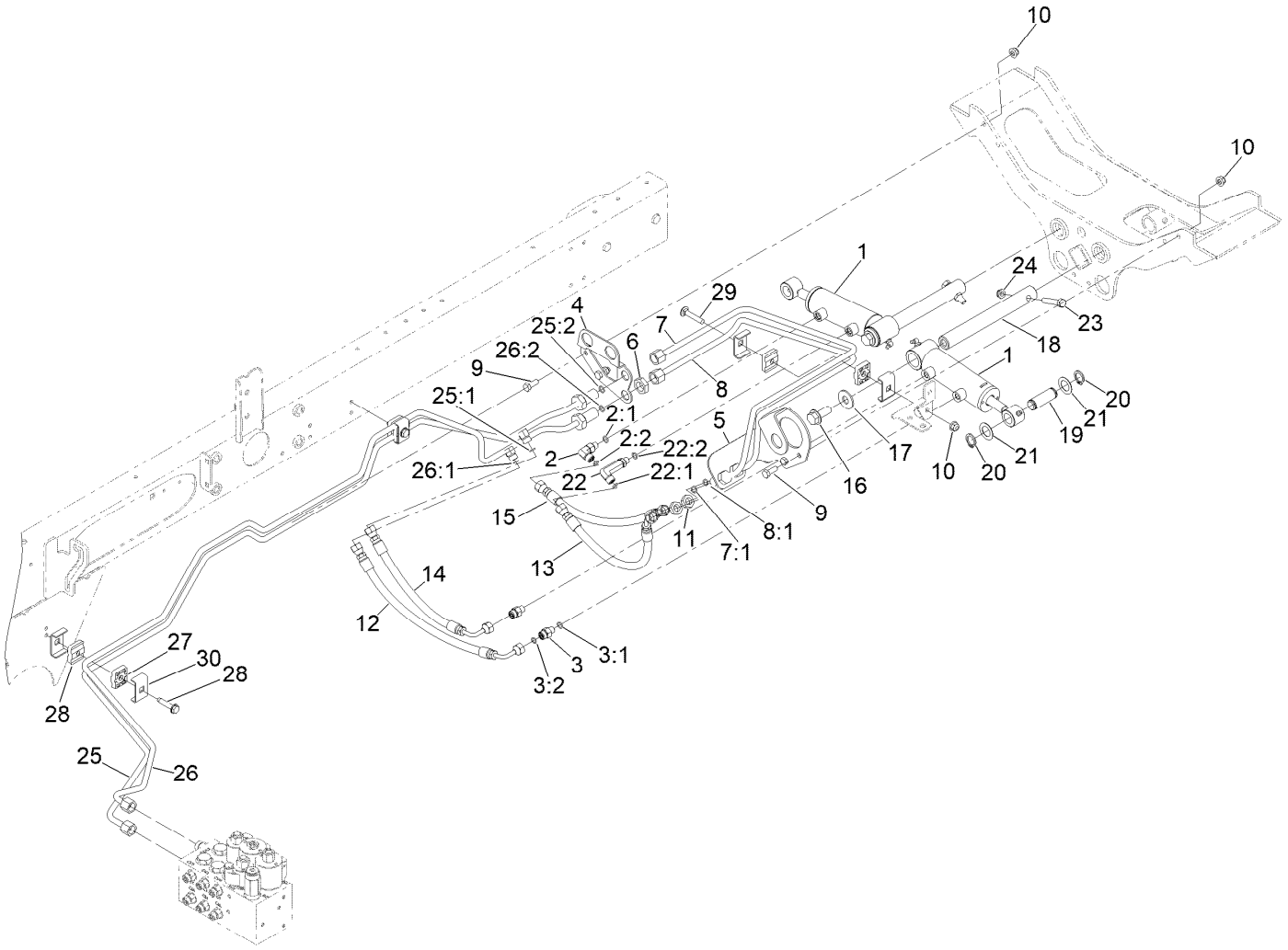

Rear Lift Hydraulic Assembly

Ref.	Part Number	Qty.	Description
1	163-2624	2	Cylinder-Hydraulic
2	340-132	1	Fitting-Elbow, 90 DEG
2:1	237-78	1	O-Ring
2:2	237-21	1	O-Ring
3	340-92	2	Fitting-Straight
3:1	237-78	1	O-Ring
3:2	237-21	1	O-Ring
4	120-3782-0P	1	Brkt-Bulhead, RH
5	110-0917-0P	1	Bracket-Bulkhead, LH
6	340-70	2	Nut-Lock
7	133-2987	1	Tube-ASM
7:1	237-21	1	O-Ring
8	133-2986	1	Tube-ASM
8:1	237-21	1	O-Ring
9	322-4	4	Screw-HH
10	119-4041	5	Nut-HF
11	340-78	2	Nut-Lock
12	110-0930	1	Hose-HYD
13	110-8966	1	Hose-HYD
14	110-0929	1	Hose-HYD
15	110-0931	1	Hose-HYD

Ref.	Part Number	Qty.	Description
16	3234-38	2	Screw-HHF
17	3256-6	2	Washer-Flat
18	117-0148	2	Pin-Cylinder
19	104-0046	2	Pin-Slide, Cylinder
20	32120-93	4	Ring-Retaining
21	3-6498	4	Washer-Thrust
22	100-7695	1	Fitting-Elbow 90
22:1	237-78	1	O-Ring
22:2	237-21	1	O-Ring
23	323-9	2	Screw-HH
24	3296-59	2	Nut-Lock, NI
25	145-2552	1	Hydraulic Tube ASM
25:1	237-21	1	O-Ring
25:2	237-22	1	O-Ring
26	145-2553	1	Hydraulic Tube ASM
26:1	237-21	1	O-Ring
26:2	237-22	1	O-Ring
27	32144-57	2	Screw-Thd Roll
28	56-7973	6	Clamp-Tube
29	3230-5	1	Bolt-CARR
30	119-1418	4	Plate-Clamp, Short

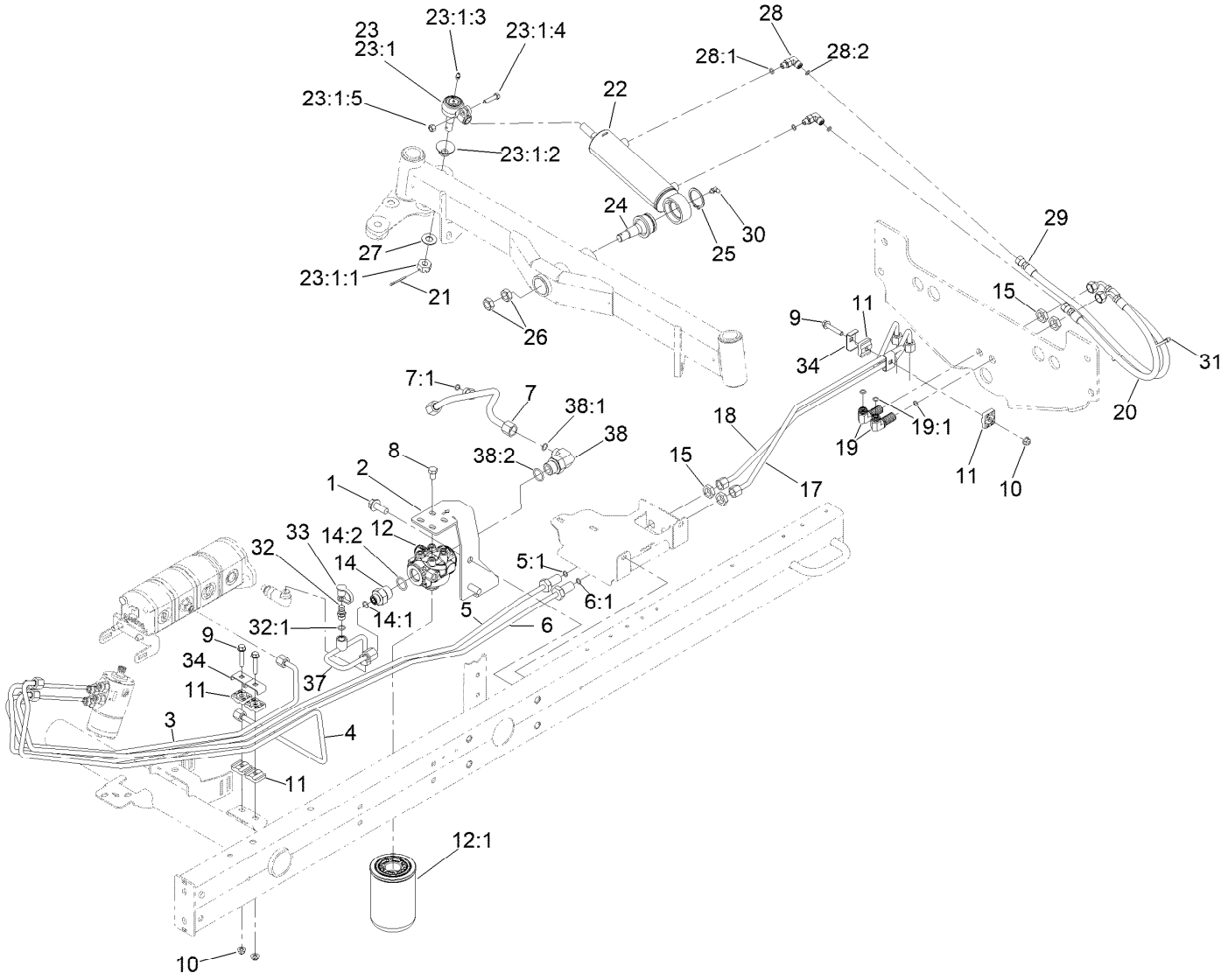

Steering Hydraulic Assembly

Ref.	Part Number	Qty.	Description
1	3234-38	2	Screw-HHF
2	145-2477-0P	1	Bracket-Mount, Filter
3	144-2096	1	Tube ASM-Hydraulic
4	144-2054	1	Tube ASM-Hydraulic
5	144-2097	1	Tube ASM-Hydraulic
5:1	237-22	1	O-Ring
6	144-2098	1	Tube ASM-Hydraulic
6:1	237-22	1	O-Ring
7	145-2562	1	Hydraulic Tube ASM
7:1	237-22	1	O-Ring
8	33115-016	4	Screw-HH
9	94-5780	3	Screw-HWH
10	119-4041	3	Nut-HF
11	56-7973	6	Clamp-Tube
12	93-2242	1	Oil Filter ASM
12:1	75-1310	1	Filter-HYD
14	100-4240	1	Fitting-STR
14:1	237-30	1	O-Ring

Ref.	Part Number	Qty.	Description
14:2	237-81	1	O-Ring
15	340-70	4	Nut-Lock
17	110-9019	1	Tube-HYD
18	110-9020	1	Tube-HYD
19	340-154	2	Union-Bulkhead
19:1	237-22	2	O-Ring
20	110-0928	1	Hose-HYD
21	3272-12	1	Pin-Cotter
22	110-9035	1	HYD Cylinder ASM
23	106-6895-03	1	Ball Joint ASM
23:1		1	Joint-Ball ●
23:1:1	32136-13	1	Nut-SHH
23:1:2	106-6896	1	Seal
23:1:3	302-5	1	Fitting-Grease
23:1:4	3210-7	1	Screw-HH
23:1:5	32152-5	1	Nut-Hex
24	106-6774	1	Joint-Ball
25	32151-104	1	Ring-Retaining, External

● Not serviced separately

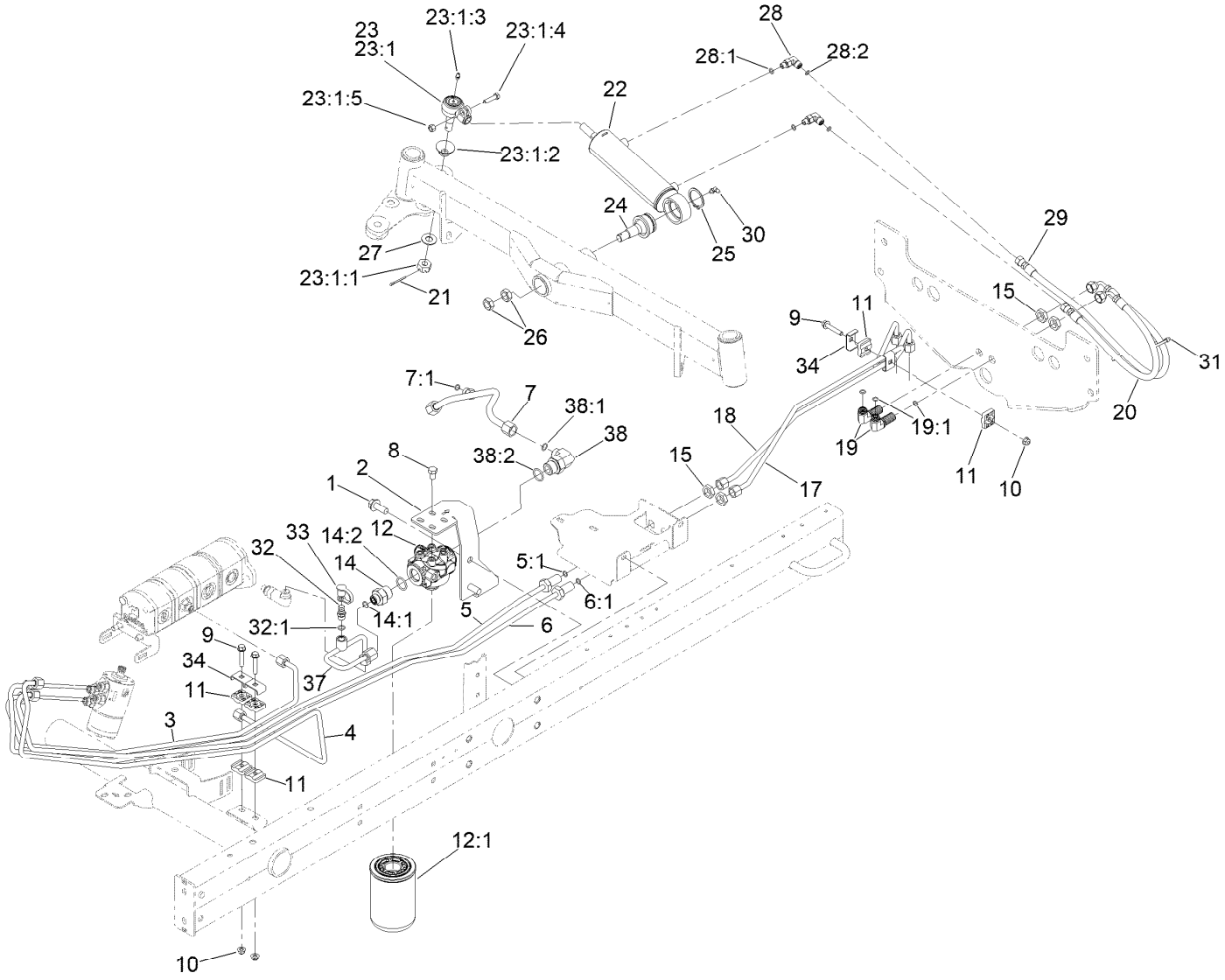

Steering Hydraulic Assembly (continued)

Ref.	Part Number	Qty.	Description
26	3220-6	2	Nut-Jam
27	69-8980	1	Washer
28	340-132	2	Fitting-Elbow, 90 DEG
28:1	237-78	1	O-Ring
28:2	237-21	1	O-Ring
29	110-0973	1	Hose-HYD
30	302-40	1	Fitting-Grease, 90 DEG
31	3290-378	2	Tie-Cable

Ref.	Part Number	Qty.	Description
32	59-7410	1	Fitting-Diagnostic
32:1	237-42	1	O-Ring
33	353-947	1	Cap-Dust, Black
34	119-1418	4	Plate-Clamp, Short
37	145-2478	1	Tube ASM-Hydraulic
38	340-131	1	Fitting-HYD, 90 DEG
38:1	237-30	1	O-Ring
38:2	237-81	1	O-Ring

● Not serviced separately

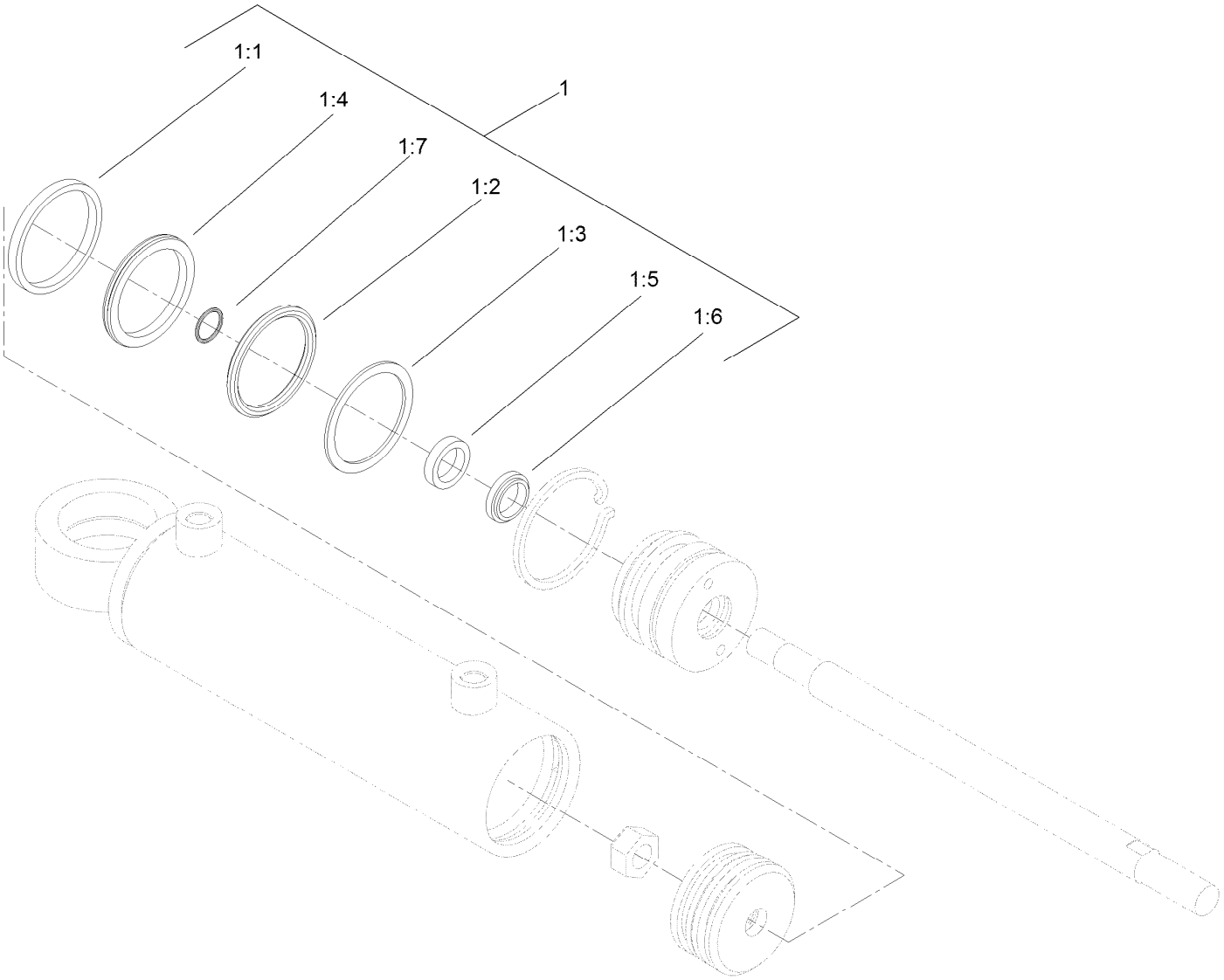

Hydraulic Cylinder Assembly No. 110-9035

Ref.	*Part Number*	*Qty.*	*Description*
1	114-8875	1	Seal Kit
1:1		1	O-Ring ●
1:2		1	Backup ●
1:3		1	Bp Seal ●
1:4		1	Wear Ring ●
1:5		1	Bt Seal ●
1:6		1	Dust Seal ●
1:7		1	O-Ring ●

● Not serviced separately

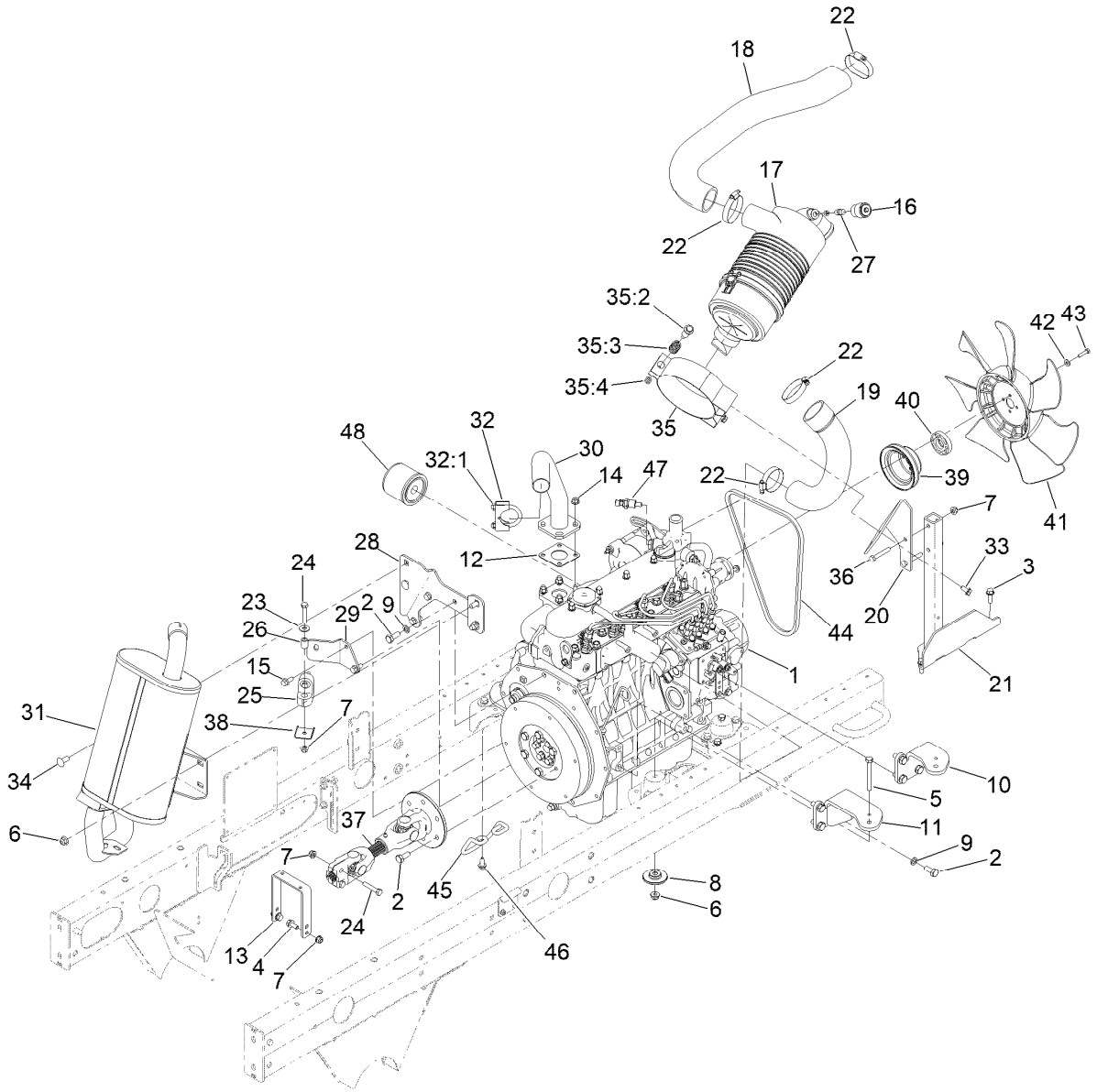

Engine, Air Cleaner and Drive Shaft Assembly

Ref.	Part Number	Qty.	Description
1	132-5206	1	Engine-Kubota, V1505
2	43-0090	19	Screw-HH
3	3234-29	3	Screw-HHF
4	3234-5	2	Screw-HHF
5	323-14	4	Screw-HH
6	119-4042	10	Nut-HF, NI
7	119-4041	11	Nut-HF
8	138-6462	4	Support-Isolator
9	48-9590	13	Washer-Lock
10	115-8066-0P	2	Mount-Engine
11	120-3812-0P	2	Mount ASM [primed]
12	99-8343	1	Gasket-Muffler
13	108-1799-0P	1	Hoop-Guard
14	104-2612	4	Nut-HF
15	33104-020	4	Screw-HHF
16	93-9164	1	Indicator-Mini
17	106-5277	1	Air Cleaner ASM
18	117-5162	1	Hose-Formed
19	117-5164	1	Hose-Formed
20	127-2695-0P	1	Bracket-Air Cleaner
21	121-5610-0P	1	Stand W.A. Air Cleaner (Welded)
22	2412-130	4	Clamp-Hose
23	3256-3	2	Washer-Flat
24	323-9	4	Screw-HH
25	95-5622	1	Hanger-Rubber
26	93-5023	2	Spacer
27	94-1416	1	Adapter-Indicator
28	108-1785-0P	1	Bracket -Support, Muffler
29	110-8974-0P	1	Bracket-Tail Pipe
30	108-1782	1	Header
31	114-8897	1	Muffler
32	2112-9	1	Clamp
32:1	32128-20	2	Nut-HF
33	3234-14	2	Screw-HHF
34	3231-27	4	Screw-CARR
35	100-4825	1	Band-Mounting, Air Cleaner
35:2	94-3653	1	Bolt
35:3	94-3654	1	Spring
35:4	33024-00	1	Nut-Lock, NI
36	322-10	2	Screw-HH

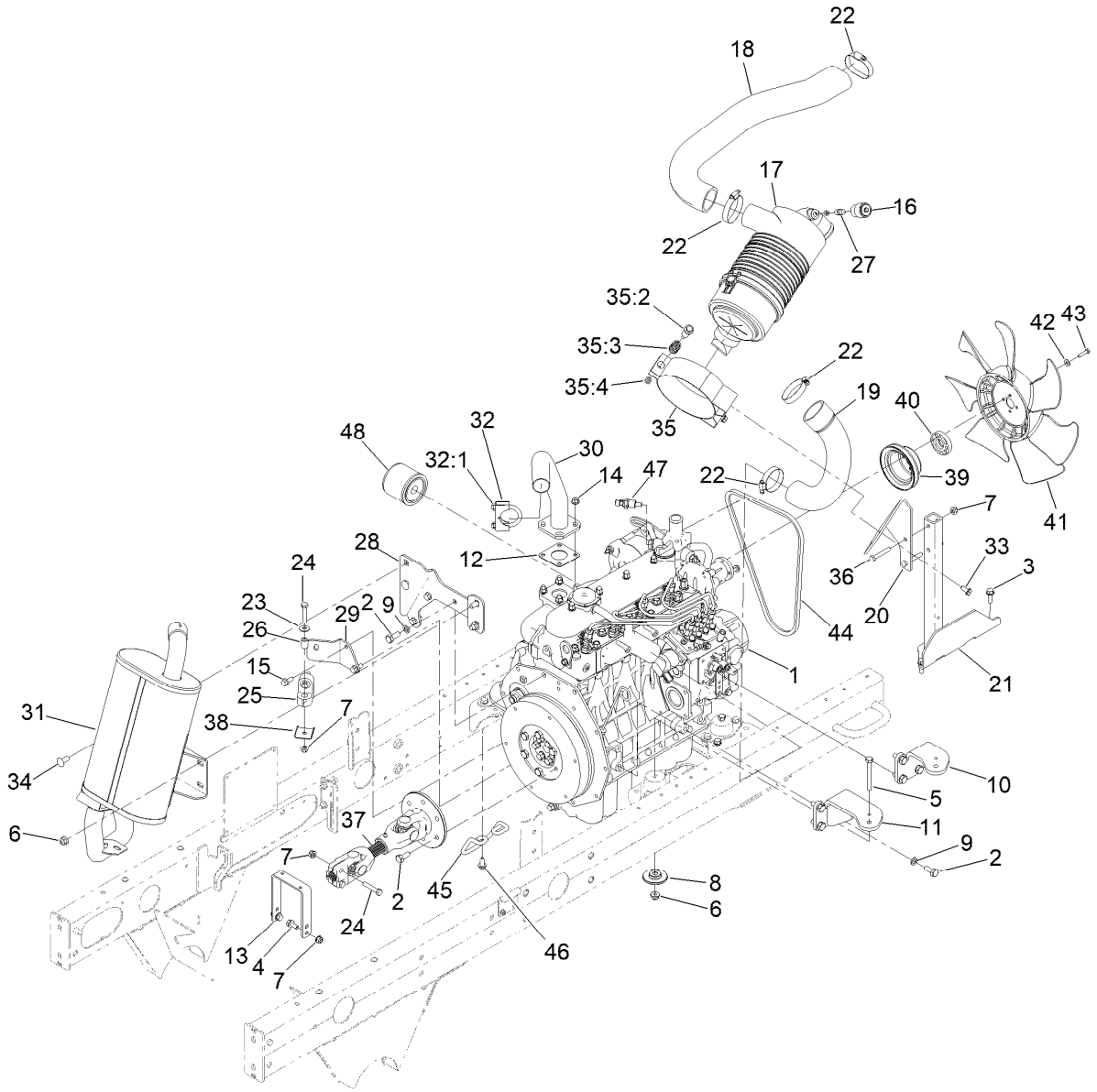

Engine, Air Cleaner and Drive Shaft Assembly (continued)

Ref.	Part Number	Qty.	Description
37	144-2053	1	Driveshaft ASM
38	110-8976	1	Plate-Support, Isolator
39	110-0972	1	Pulley
40	104-4247	1	Spacer-Fan
41	110-0966	1	Fan-Cooling
42	3256-22	4	Washer-Flat

Ref.	Part Number	Qty.	Description
43	33113-025	4	Screw-HH
44	98-9676	1	V-Belt
45	127-2612	1	Guard-Pipe, Tail
46	32104-32	2	Screw-HWH
47	119-4478	1	Sender-Temperature
48	108-3841	1	Filter-Oil

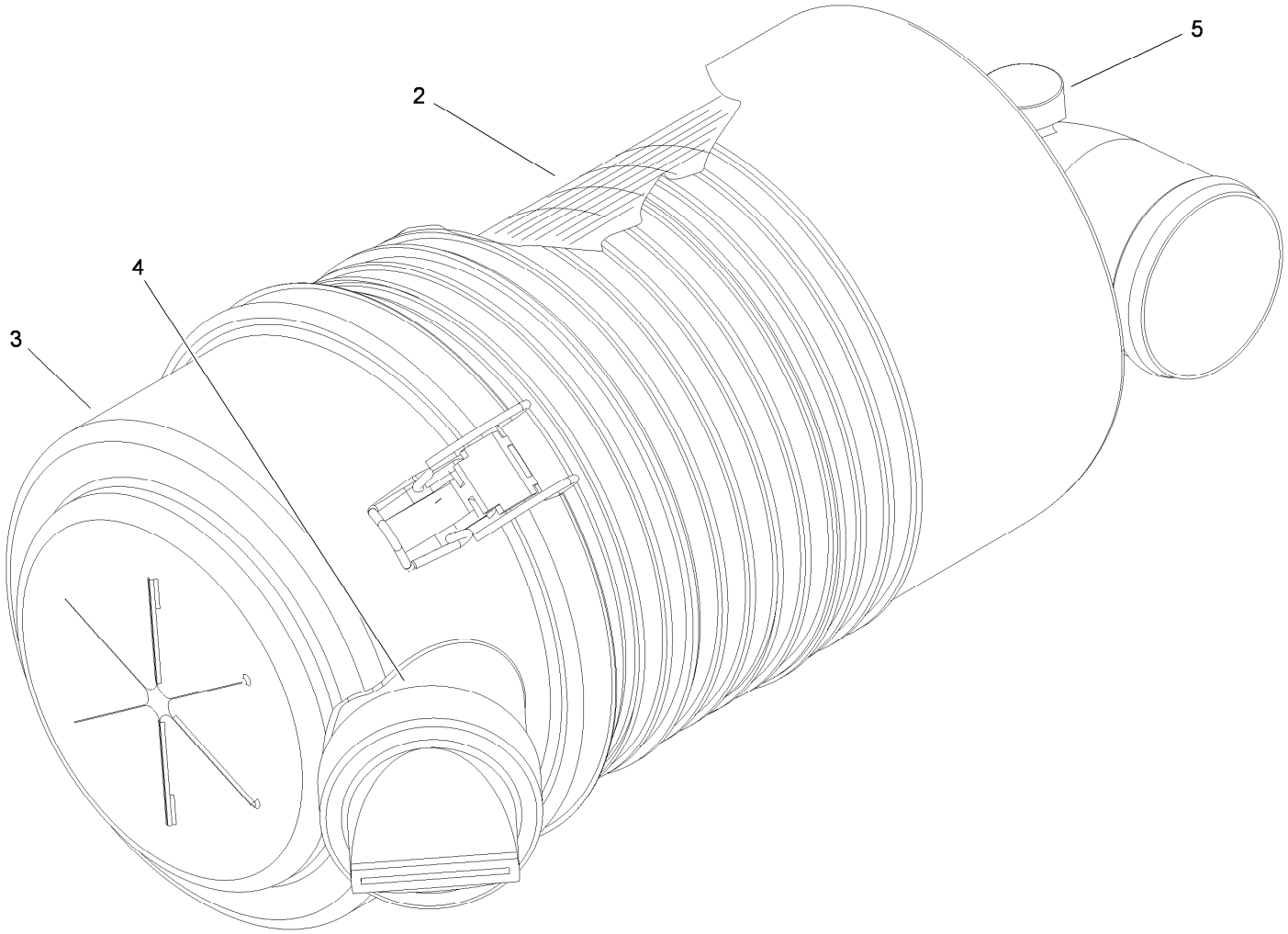

Air Cleaner Assembly No. 106-5277

Ref.	*Part Number*	*Qty.*	*Description*
2	108-3810	1	Filter-Air
3	98-9771	1	Cover ASM
4	87-9400	1	Valve-Vacuator
5	285-17	1	Plug-Pipe

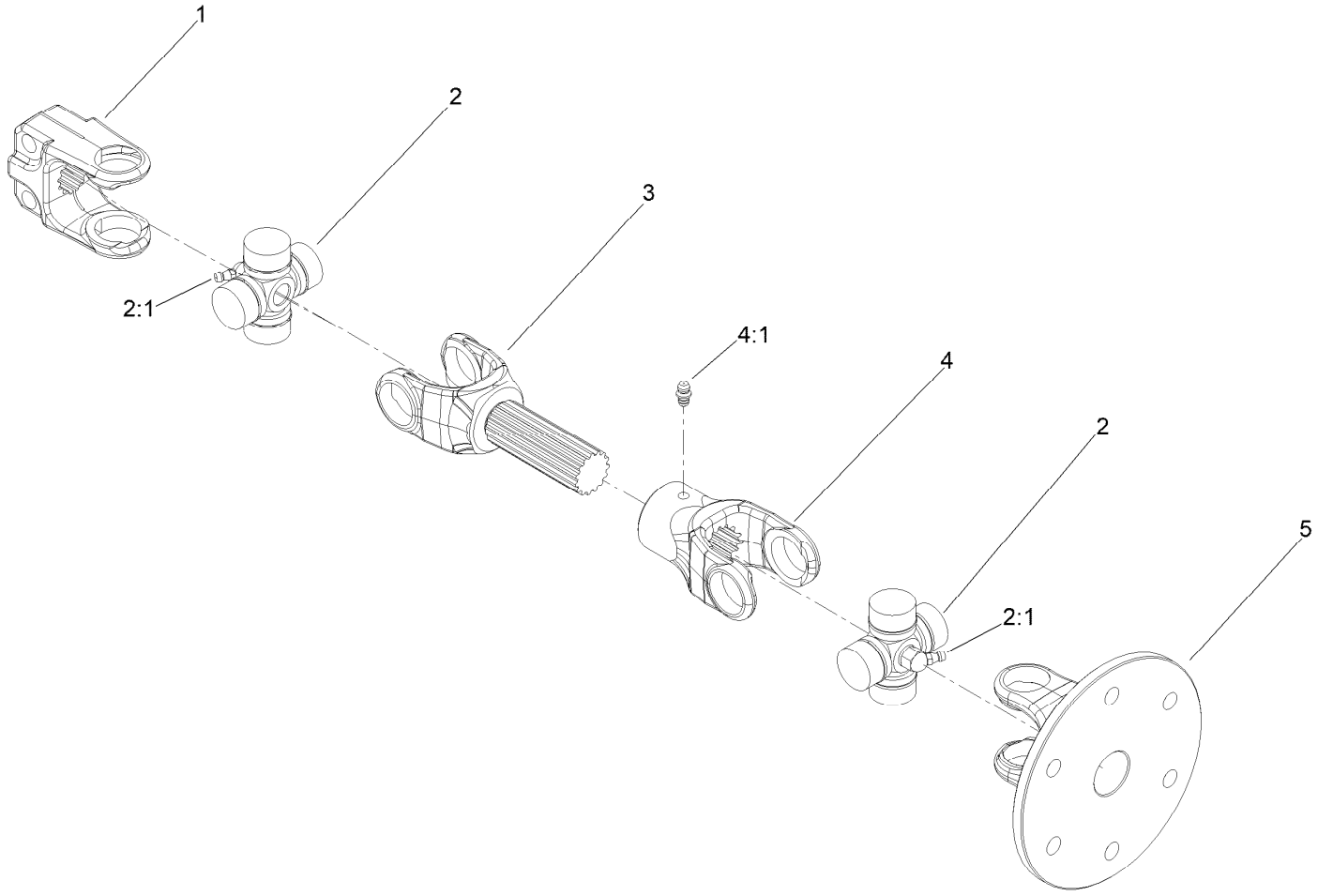

Drivershaft Assembly No. 144-2053

Ref.	*Part Number*	*Qty.*	*Description*
1	145-2543	1	Yoke And Shaft ASM
2	54-9180	2	U-Joint Kit
2:1	62-3820	1	Fitting-Grease
3	127-2553	1	Yoke-Shaft
4	127-2554	1	Yoke-Telescoping
4:1	302-22	1	Fitting-Grease
5	145-2535	1	Yoke-Driveshaft, 13T

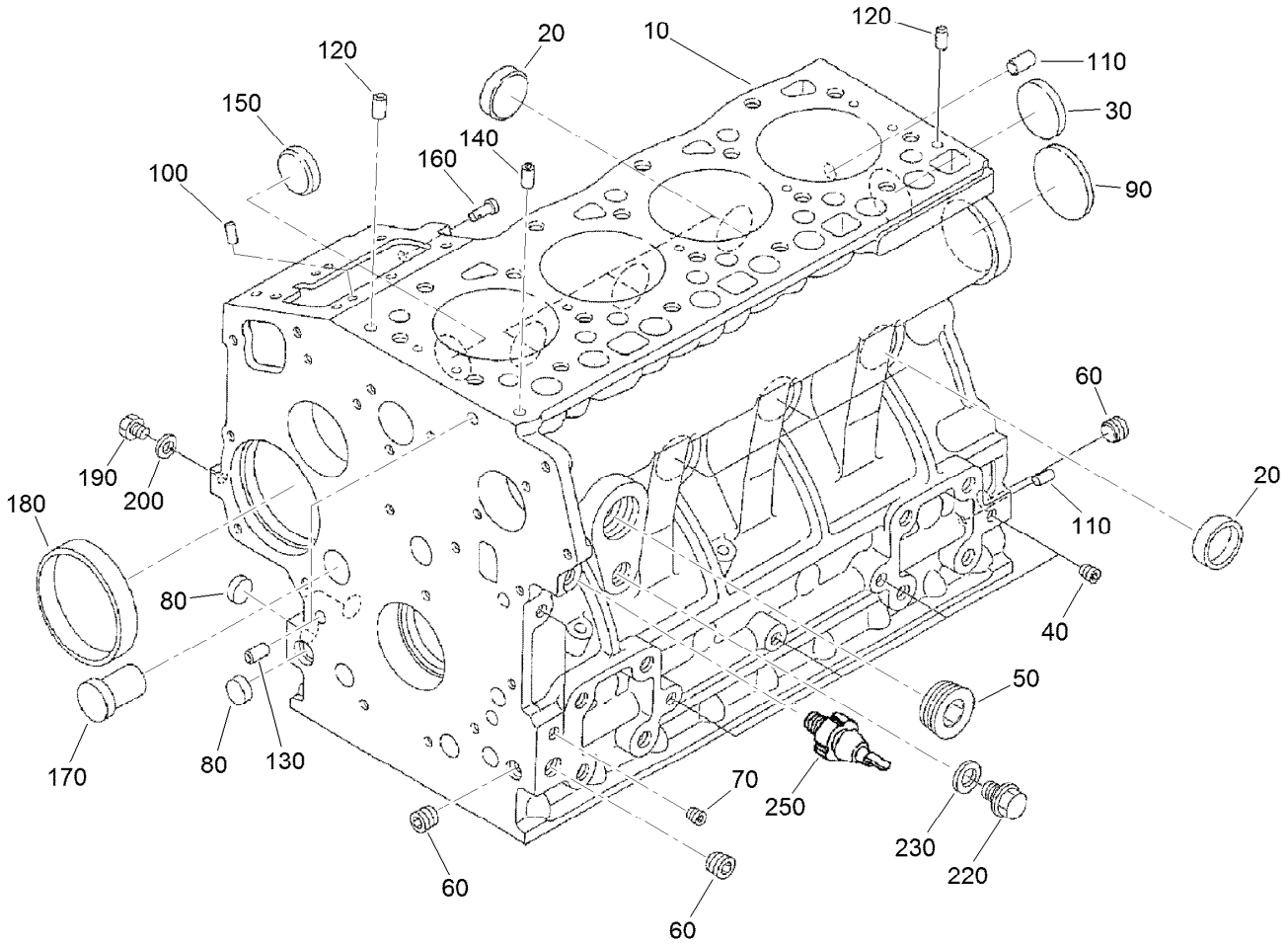

Crankcase Assembly

Ref.	Part Number	Qty.	Description
10	120-2558	1	Crankcase ASM
20	98-9398	6	Cap-Sealing
30	98-7539	1	Cap-Sealing
40	98-9687	4	Plug
50	105-3779	1	Plug
60	98-9597	3	Plug
70	98-7487	2	Plug
80	98-9379	3	Plug-Expansion
90	98-9668	1	Plug-Expansion
100	98-9375	2	Pin-Straight
110	98-9377	2	Pin-Straight
120	98-9376	2	Pin-Straight

Ref.	Part Number	Qty.	Description
130	98-9387	2	Pin-Pipe
140	98-9539	1	Pin-Pipe
150	98-9599	1	Plug
160	105-3796	1	Pin-Spring, Start
170	98-9675	1	Plug
180	98-9656	1	Bushing-Governor, Gear
190	98-7507	1	Plug
200	98-7428	1	Gasket
220	99-3447	1	Plug
230	106-7056	1	Gasket
250	98-9416	1	Switch-Oil

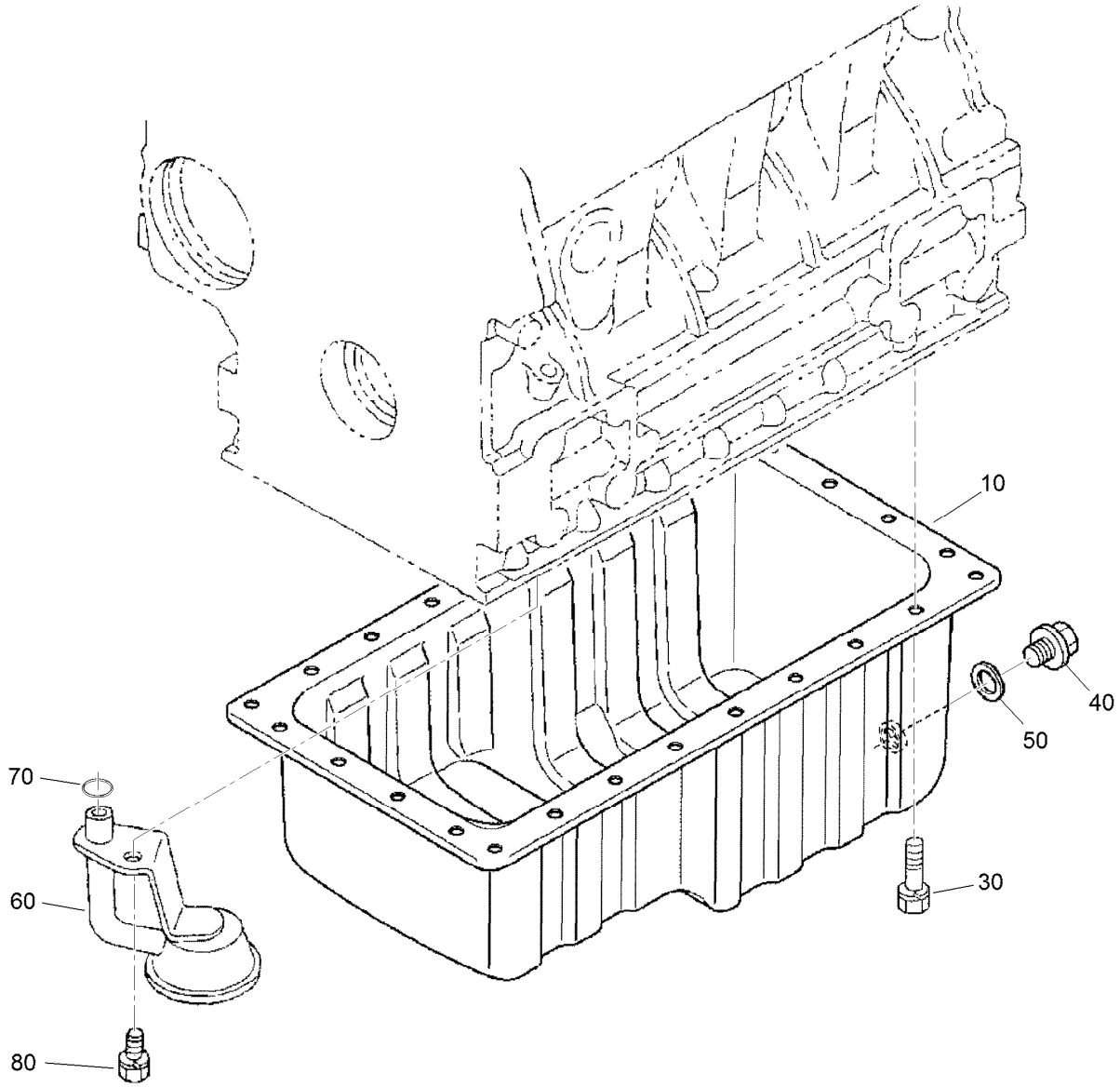

Oil Pan Assembly

Ref.	*Part Number*	*Qty.*	*Description*
10	112-0186	1	Oil Pan ASM
30	98-9351	26	Bolt
40	114-8151	1	Plug-Drain
50	98-7524	1	Gasket
60	112-7003	1	Head-Filter, Oil
70	105-3776	1	O-Ring
80	98-7526	1	Bolt

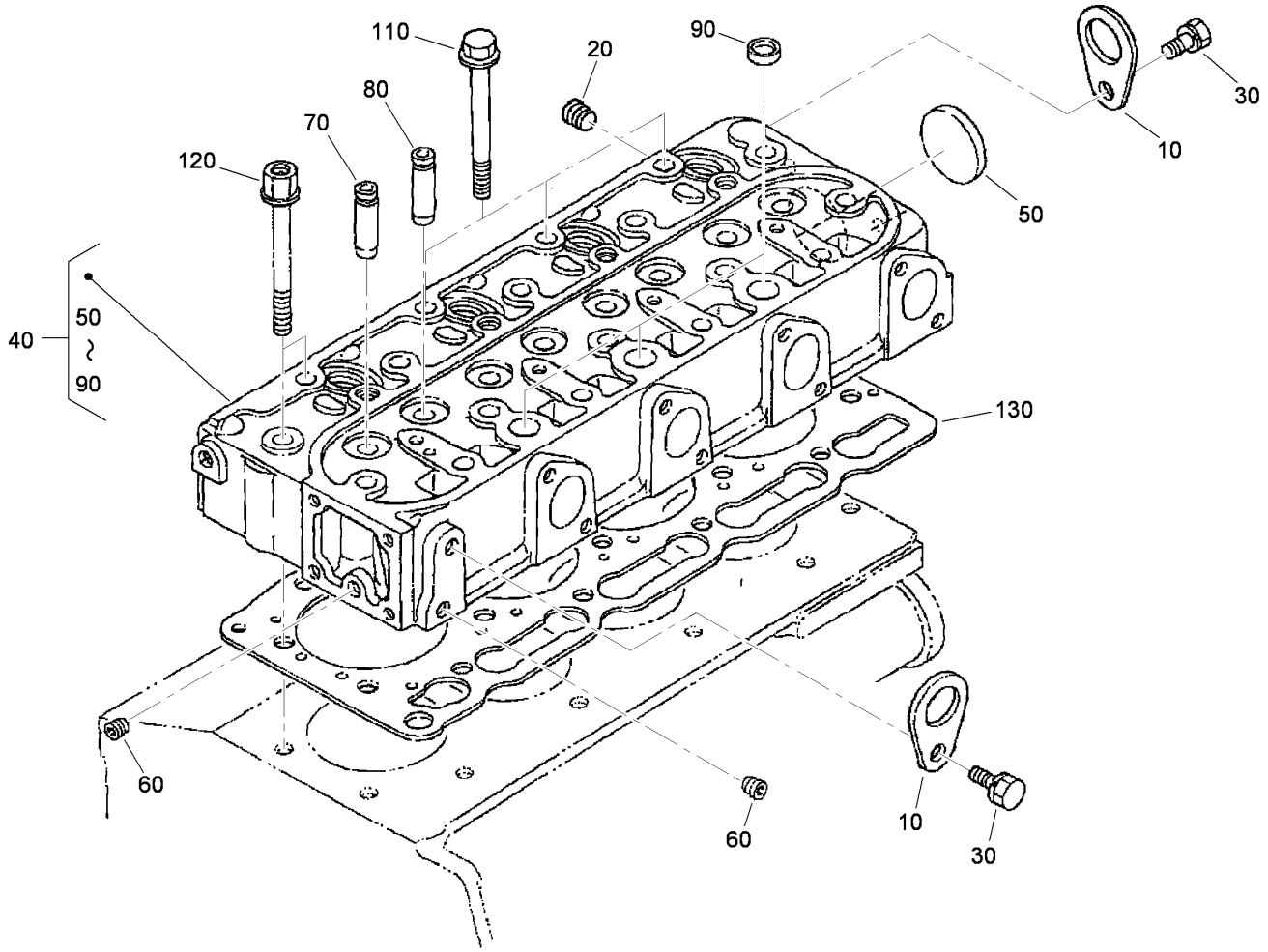

Cylinder Head Assembly

Ref.	*Part Number*	*Qty.*	*Description*
10	98-7531	2	Hook-Engine
20	98-9444	1	Plug
30	100-9195	2	Bolt
40	115-3012	1	Cylinder Head ASM
50	105-3705	1	Cap-Sealing
60	98-9687	2	Plug
70	107-9066	4	Guide-Valve, Inlet
80	107-9067	4	Guide-Valve, Exhaust
90	98-9389	3	Cap-Sealing
110	98-9479	16	Bolt-Head, Cylinder
120	98-9647	2	Bolt-Head, Cylinder
130	108-2855	1	Gasket-Head, Cylinder

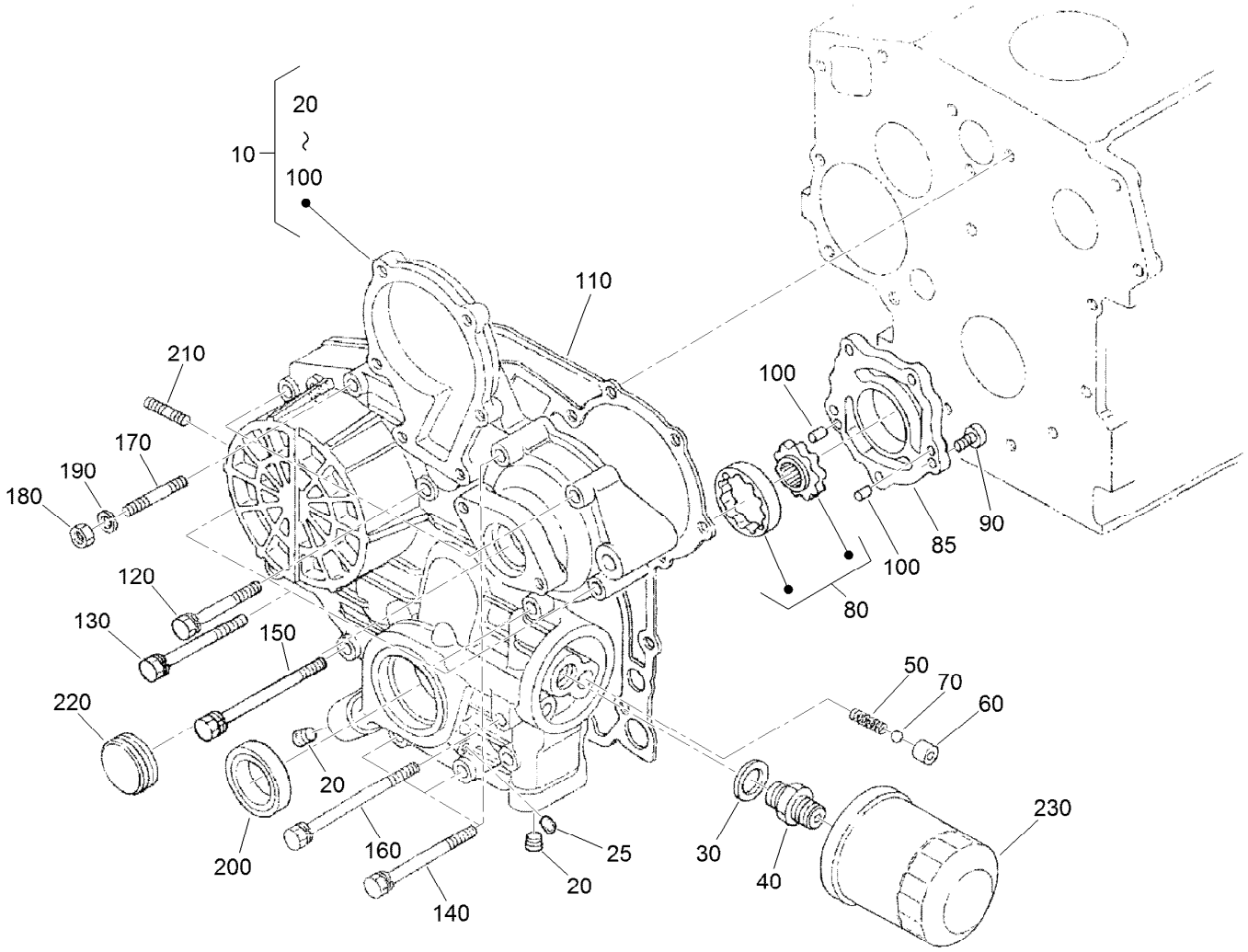

Gear Case Assembly

Ref.	Part Number	Qty.	Description
10	115-4111	1	Gear Case ASM
20	127-0425	2	Plug
25	98-7487	1	Plug
30	98-7562	1	Washer-Plain
40	98-9388	1	Joint-Pipe
50	98-9544	1	Spring
60	98-9543	1	Seat-Valve
70	98-9380	1	Ball
80	98-9540	1	Oil Pump Rotor ASM
85	107-9069	1	Cover-Pump, Oil
90	107-9071	5	Screw
100	107-9072	2	Pin-Straight
110	98-9633	1	Gasket-Case, Gear

Ref.	Part Number	Qty.	Description
120	100-1765	3	Bolt
130	105-3797	4	Bolt
140	98-9356	4	Bolt
150	107-9074	1	Bolt
160	98-9586	1	Bolt
170	105-3709	1	Stud
180	98-7572	1	Nut
190	98-7699	1	Washer-Spring
200	98-9482	1	Seal-Oil
210	105-3710	2	Stud
220	99-3515	1	Plug-Gearcase
230	108-3841	1	Filter-Oil

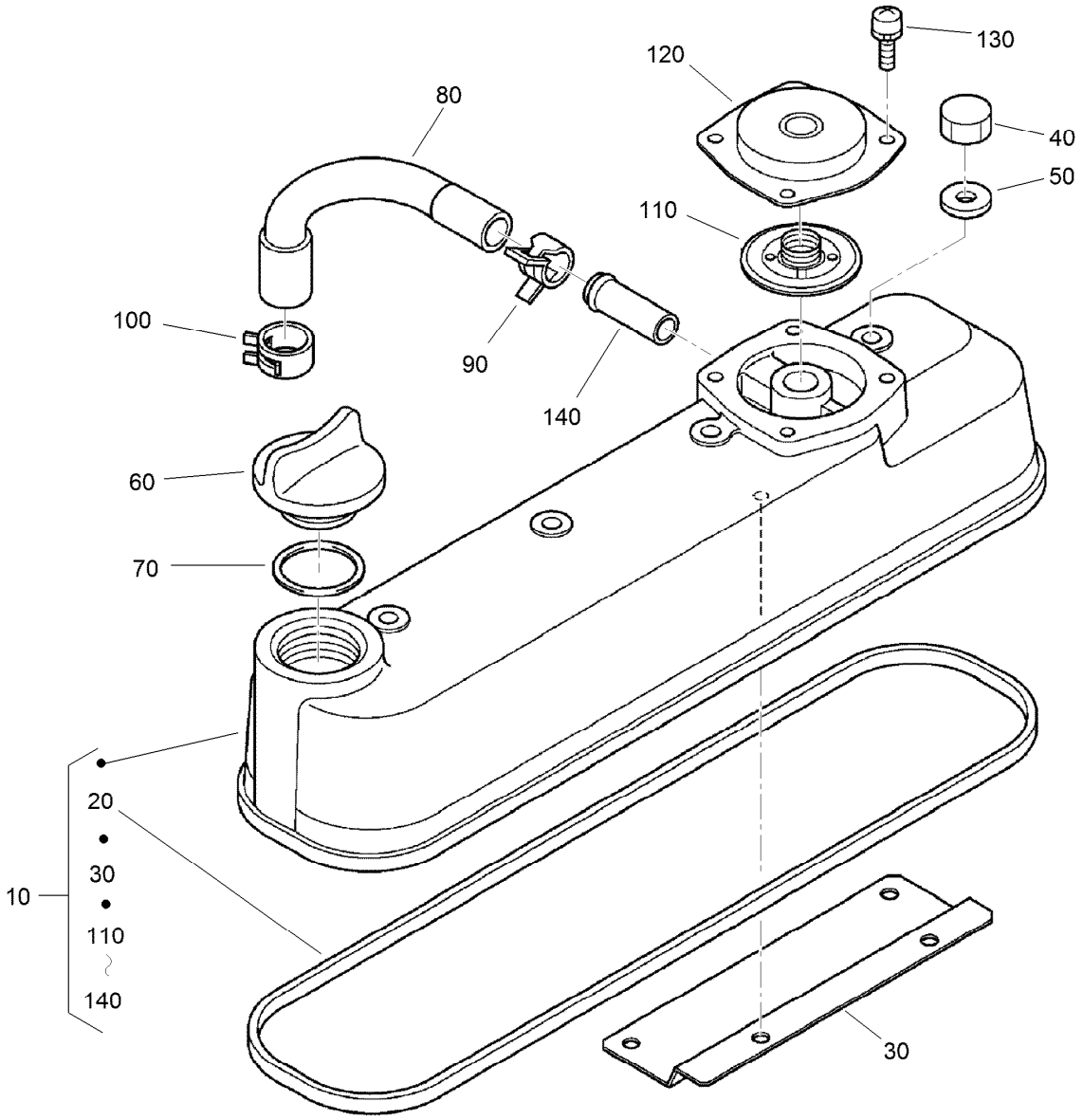

Cylinder Head Cover Assembly

Ref.	*Part Number*	*Qty.*	*Description*
10	115-4130	1	Cylinder Head Cover ASM
20	105-3712	1	Gasket-Cover, Head
30	108-2857	1	Shield-Breather
40	98-9455	4	Nut-Cap
50	98-9454	4	Gasket
60	107-9075	1	Plug-Filler, Oil
70	99-3446	1	O-Ring
80	108-2858	1	Tube-Breather
90	108-2859	1	Clamp-Hose
100	108-2860	1	Clamp-Hose
110	110-3715	1	Valve-Breather
120	110-3714	1	Cover-Breather
130	98-9364	4	Screw (With Washer)
140	98-7766	1	Pipe-Return, Water

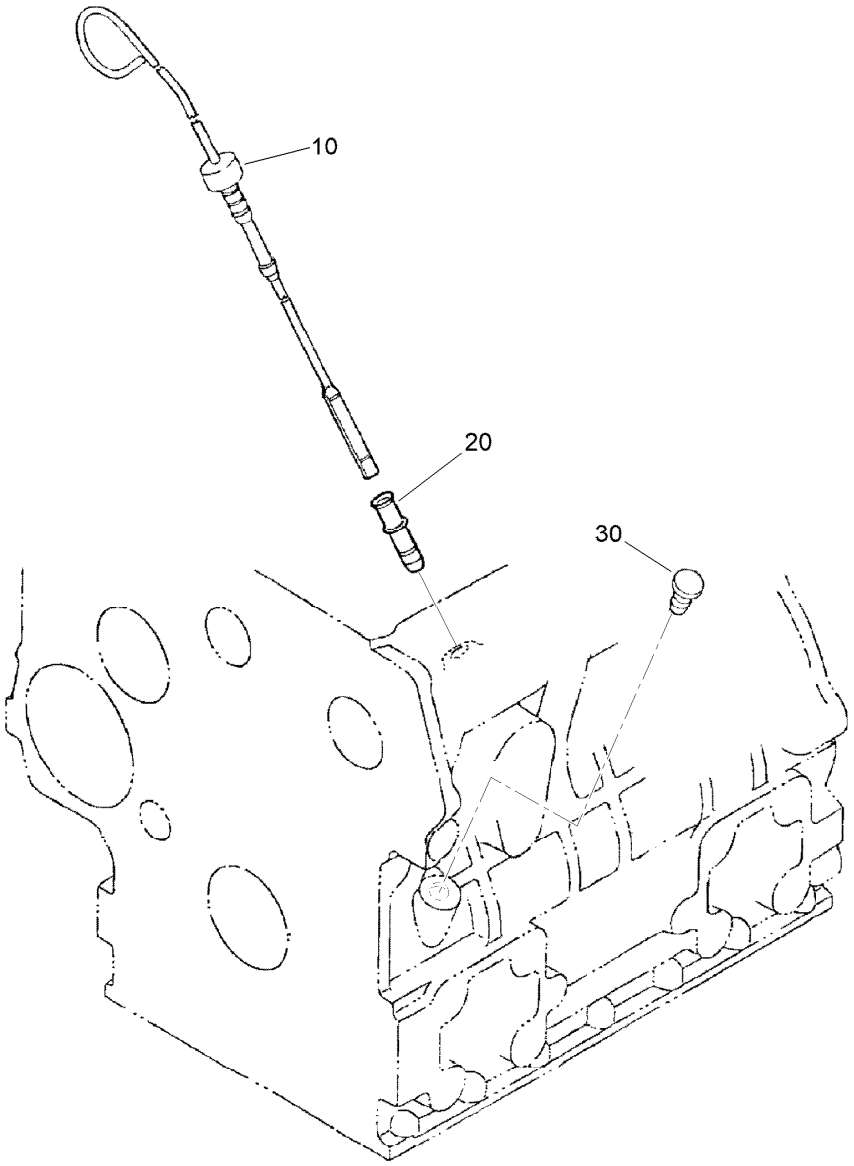

Dipstick and Guide Assembly

Ref.	*Part Number*	*Qty.*	*Description*
10	105-3714	1	Gauge-Oil
20	105-4580	1	Guide-Gauge, Oil
30	110-3720	1	Plug-Gauge, Oil

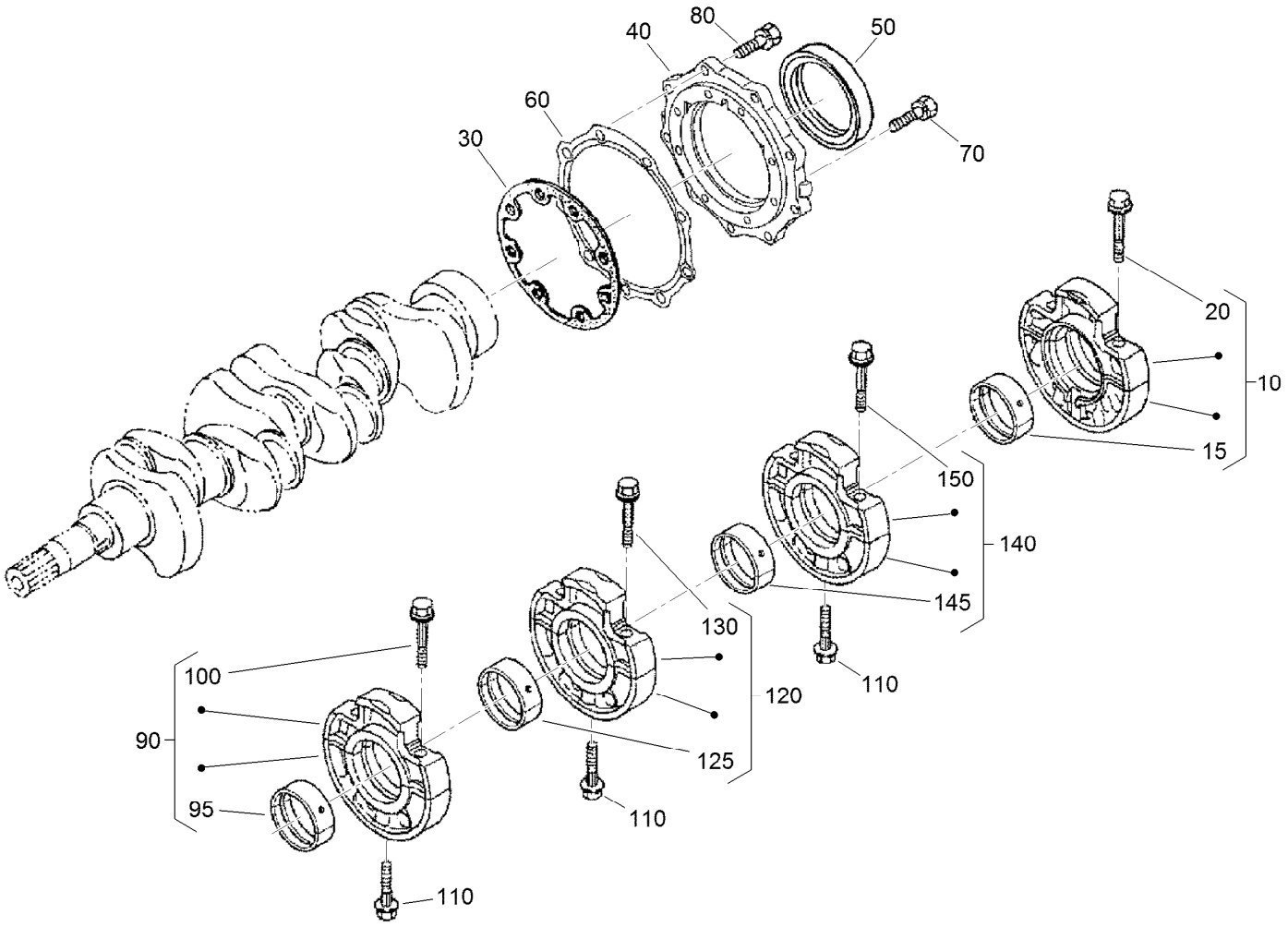

Main Bearing Case Assembly

Ref.	Part Number	Qty.	Description
10	112-7026	1	Wheel Bearing Case ASM
15	112-7045	1	Metal-Crankshaft
20	98-9484	2	Bolt-Case, Bearing
30	98-9634	1	Gasket-Case, Bearing
40	112-7046	1	Cover-Case, Bearing
50	112-0180	1	Seal-Oil
60	112-7037	1	Gasket-Cover, Case
70	98-9352	8	Bolt
80	98-7568	9	Bolt
90	115-4106	1	Main Bearing Case ASM
95	98-9524	1	Metal-Crankshaft (STD Set)
100	98-9484	2	Bolt-Case, Bearing
110	98-9485	3	Bolt-Case, Bearing
120	115-4107	1	Main Bearing Case ASM
125	115-4106	1	Main Bearing Case ASM
130	98-9484	2	Bolt-Case, Bearing
140	130-1265	1	Main Bearing Case ASM
145	115-4106	1	Main Bearing Case ASM
150	98-9484	2	Bolt-Case, Bearing

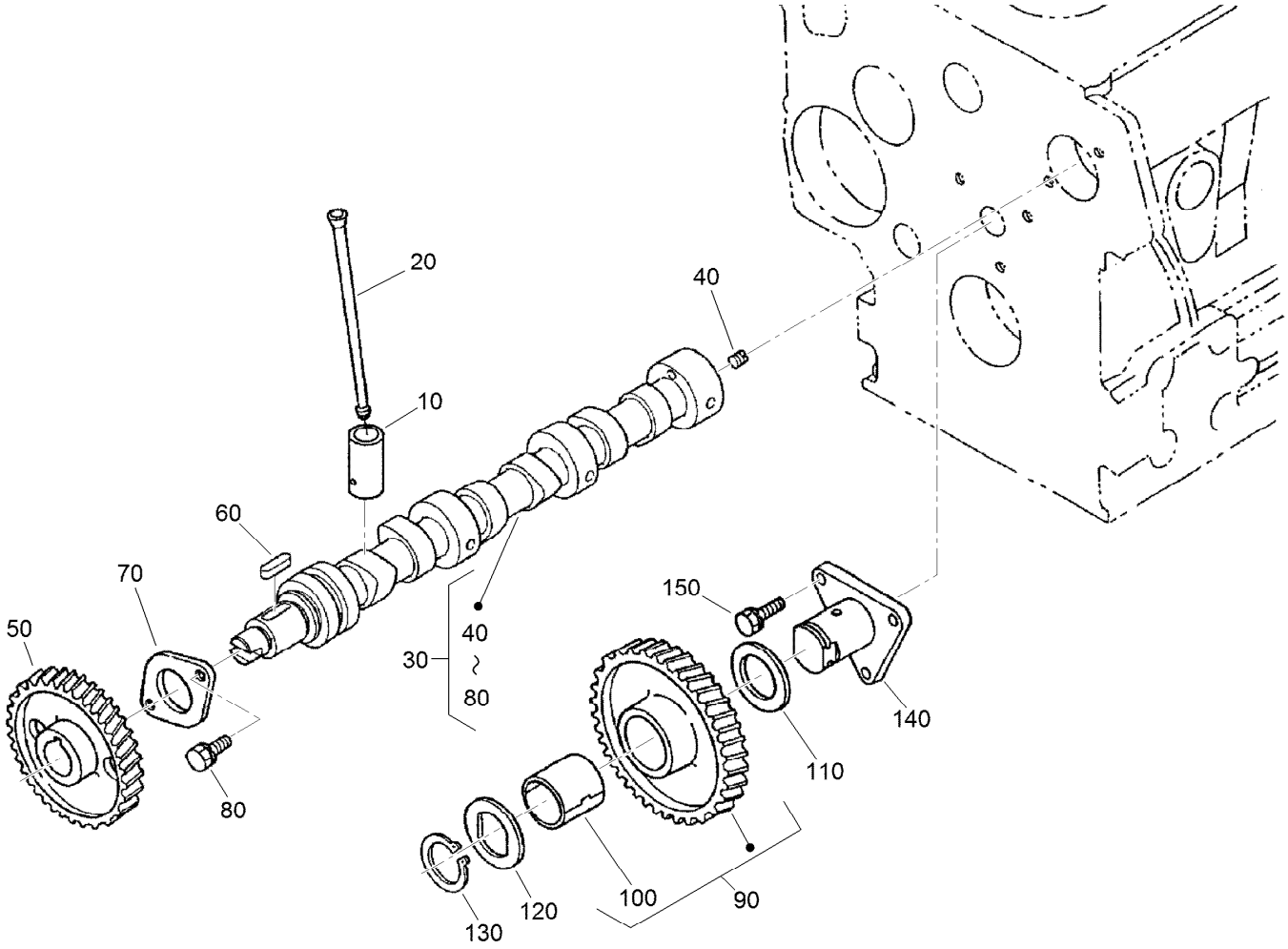

Camshaft and Idle Gear Assembly

Ref.	*Part Number*	*Qty.*	*Description*
10	112-0185	8	Tappet
20	98-9509	8	Rod-Push
30	115-4128	1	Camshaft ASM
40	98-7449	1	Screw-Set
50	120-3116	1	Camshaft ASM
60	98-9378	1	Key-Feather
70	98-9510	1	Stopper-Camshaft
80	98-7692	2	Bolt
90	98-9649	1	Idle Gear ASM
100	98-9650	1	Bushing-Gear, Idle
110	98-9535	1	Collar-Gear, Idle
120	98-9536	1	Collar-Gear, Idle
130	98-9534	1	Circlip-Gear, Idle
140	98-9533	1	Shaft-Gear, Idle
150	98-7692	3	Bolt

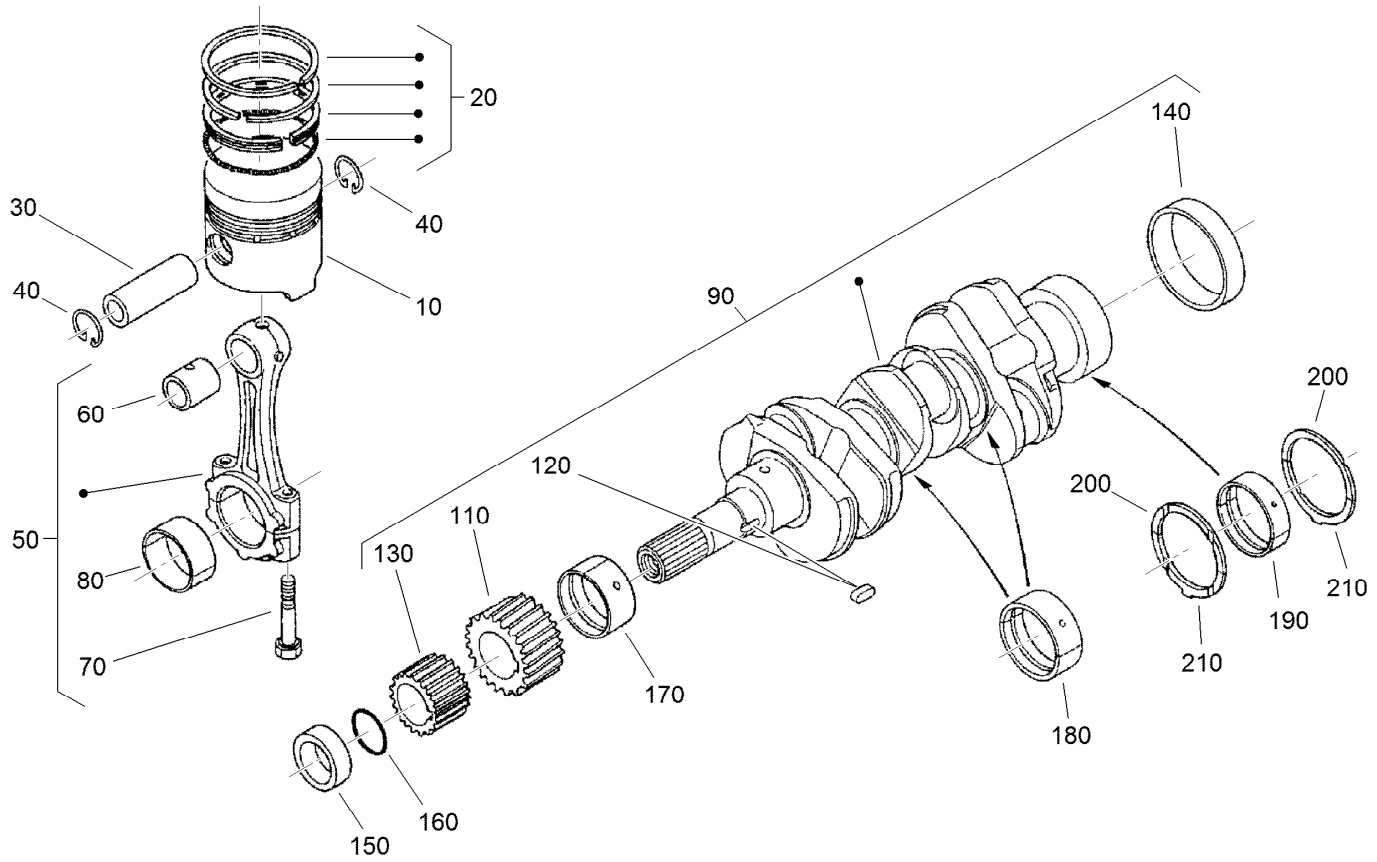

Piston and Crankshaft Assembly

Ref.	Part Number	Qty.	Description
10	112-8404	4	Piston (STD)
10	112-8414	4	Piston (+0.5Mm)
20	98-9551	4	Piston Ring ASM (STD)
20	108-1404	4	Piston Ring ASM (+0.5MM)
30	98-9513	4	Pin-Piston
40	98-9514	8	Circlip-Pin, Piston
50	117-7586	4	Connecting Rod ASM
60	115-3014	4	Bushing-Pin, Piston
70	98-9517	8	Bolt-Rod, Connecting
80	98-9520	4	Bearing-Rod (0.4MM)
80	98-9519	4	Bearing-Rod (-0.2MM)
80	98-9518	4	Metal-Crankpin (STD)
90	105-3718	1	Crankshaft ASM
110	98-9532	1	Gear-Crankshaft
120	98-9666	1	Key
130	98-9542	1	Gear-Drive, Oil Pump
140	98-9522	1	Sleeve-Crankshaft

Ref.	Part Number	Qty.	Description
150	98-9521	1	Collar-Crankshaft
160	105-3783	1	O-Ring
170	98-9523	1	Metal Crankshaft (STD)
170	98-9528	1	Bearing-Main (-0.2MM)
170	98-9529	1	Bearing-Main (0.4MM)
180	98-9524	3	Metal-Crankshaft (STD Set)
180	127-0433	3	Metal-Crankshaft (-0.2MM)
180	98-9531	3	Bearing-Main (0.4MM)
190	112-7006	1	Bearing-Main (STD)
190	112-7007	1	Metal-Crankshaft (.2MM)
190	112-7008	1	Metal-Crankshaft (.4MM)
200	112-7045	2	Metal-Crankshaft
200	112-7039	2	Metal-Crankshaft (0.2Mm)
200	112-7040	2	Metal-Crankshaft (-0.4Mm)
210	98-9688	2	Bearing-Thrust (STD)
210	127-0437	2	Metal-Side (+0.2MM)
210	127-0438	2	Metal-Side (+0.40MM)

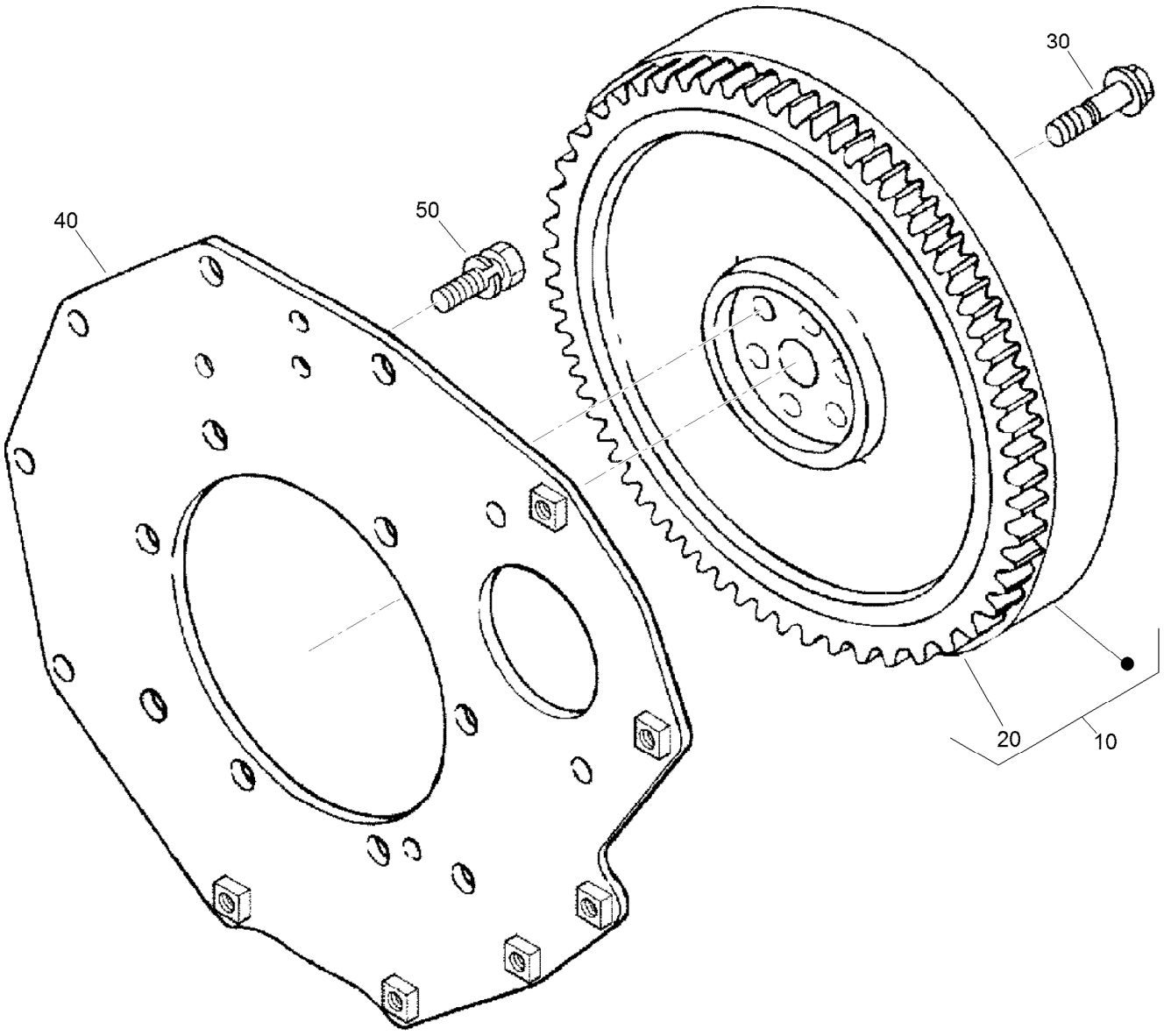

Flywheel Assembly

Ref.	*Part Number*	*Qty.*	*Description*
10	105-3721	1	Flywheel ASM
20	115-3015	1	Gear-Ring
30	98-9537	6	Bolt-Flywheel
40	98-9486	1	Plate-End, Rear
50	98-9392	8	Bolt

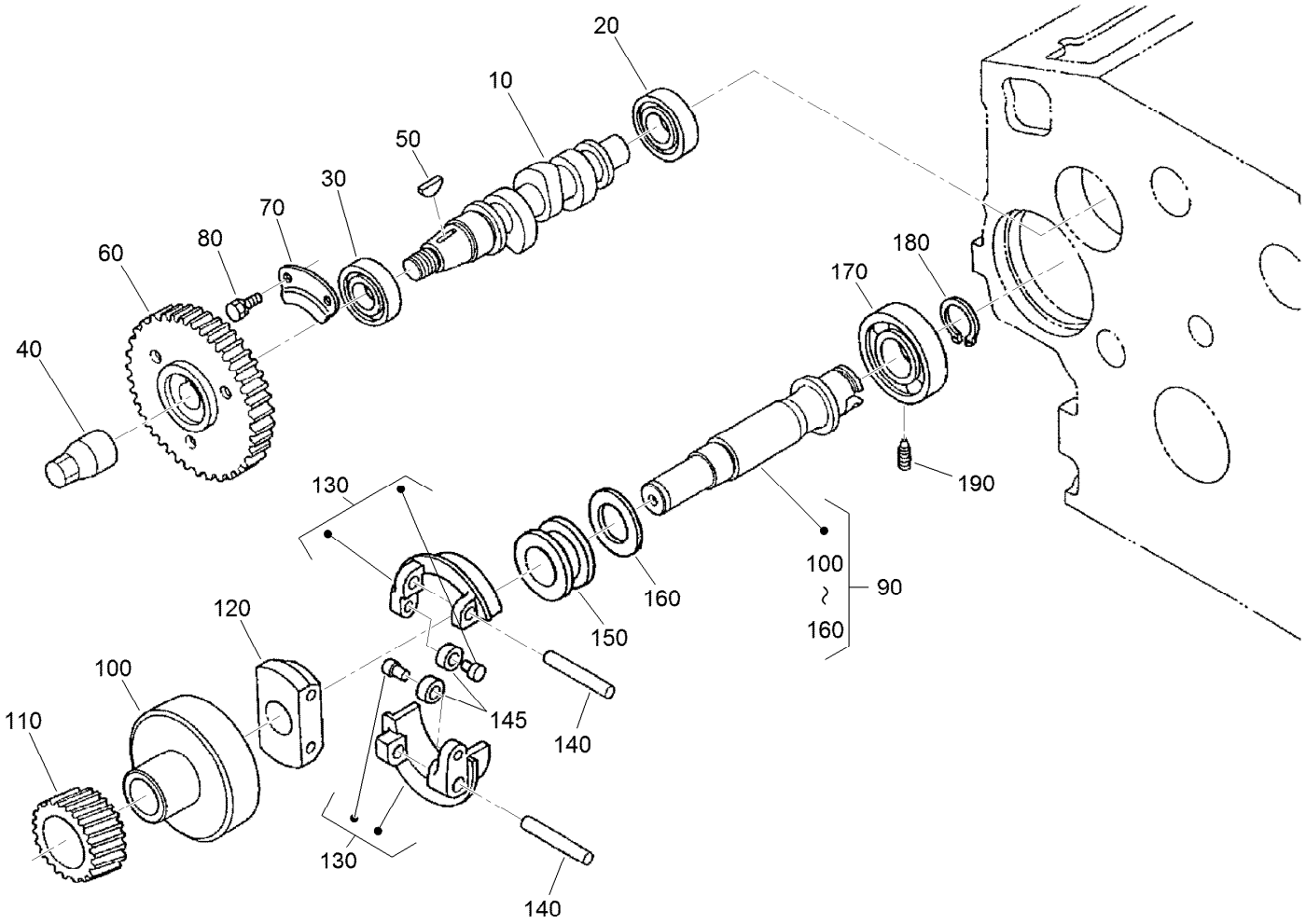

Fuel Camshaft and Governor Shaft Assembly

Ref.	Part Number	Qty.	Description
10	105-3723	1	Camshaft-Fuel
20	107-9077	1	Bearing-Ball
30	107-9078	1	Bearing-Ball
40	98-9590	1	Nut-Cap
50	98-9595	1	Key-Woodruff
60	98-9669	1	Gear-Pump, Injection
70	98-9511	1	Stopper-Fuel, Camshaft
80	98-7692	2	Bolt
90	105-3724	1	Governor Shaft ASM
100	98-9562	1	Holder-Gear, Governor

Ref.	Part Number	Qty.	Description
110	98-9673	1	Gear-Governor
120	98-9561	1	Holder-Weight, Governor
130	98-9559	2	Governor Weight ASM
140	98-9560	2	Shaft-Weight, Governor
145	98-9692	2	Roller
150	98-9563	1	Sleeve-Governor
160	98-9564	1	Washer-Thrust
170	107-9079	1	Bearing-Ball
180	98-9657	1	Circlip-Shaft, Governor
190	98-9565	1	Screw-Set

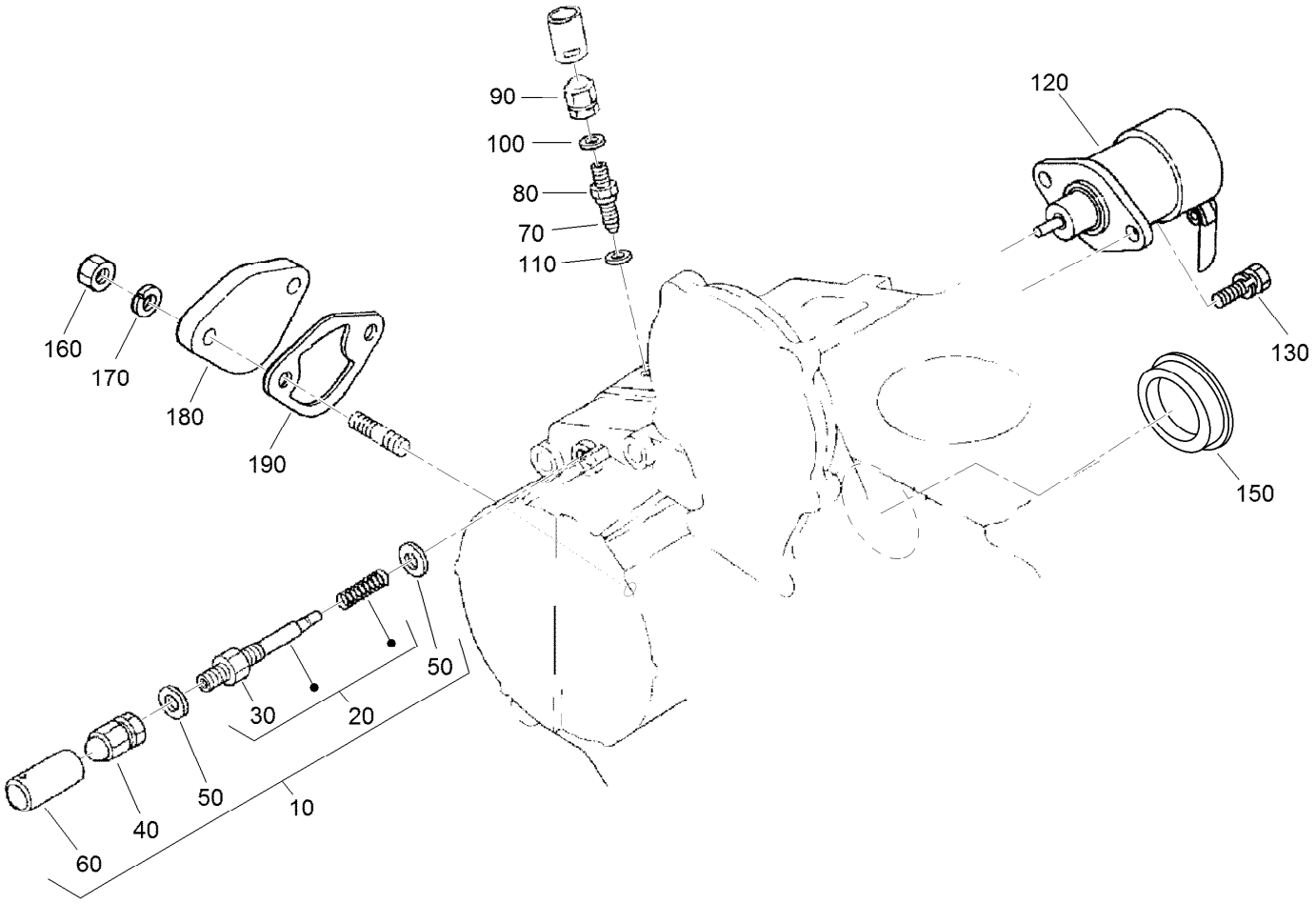

Idle Apparatus Assembly

Ref.	*Part Number*	*Qty.*	*Description*
10	98-9678	1	Idle Apparatus ASM
20	112-7014	1	Adjusting Bolt ASM
30	98-9439	1	Nut
40	112-0181	1	Nut
50	98-7654	2	Gasket
60	98-7656	1	Cap
70	112-7015	1	Bolt-Adjusting
80	100-2175	1	Nut-Lock
90	112-0181	1	Nut
100	98-7654	1	Gasket
110	107-9081	1	Gasket
120	104-5155	1	Solenoid-Stop
130	115-3039	2	Bolt-HSH
150	112-7016	1	Cover-Pump
160	98-7572	2	Nut
170	98-7699	2	Washer-Spring
180	99-3514	1	Cover
190	98-9636	1	Gasket-Pump, Fuel

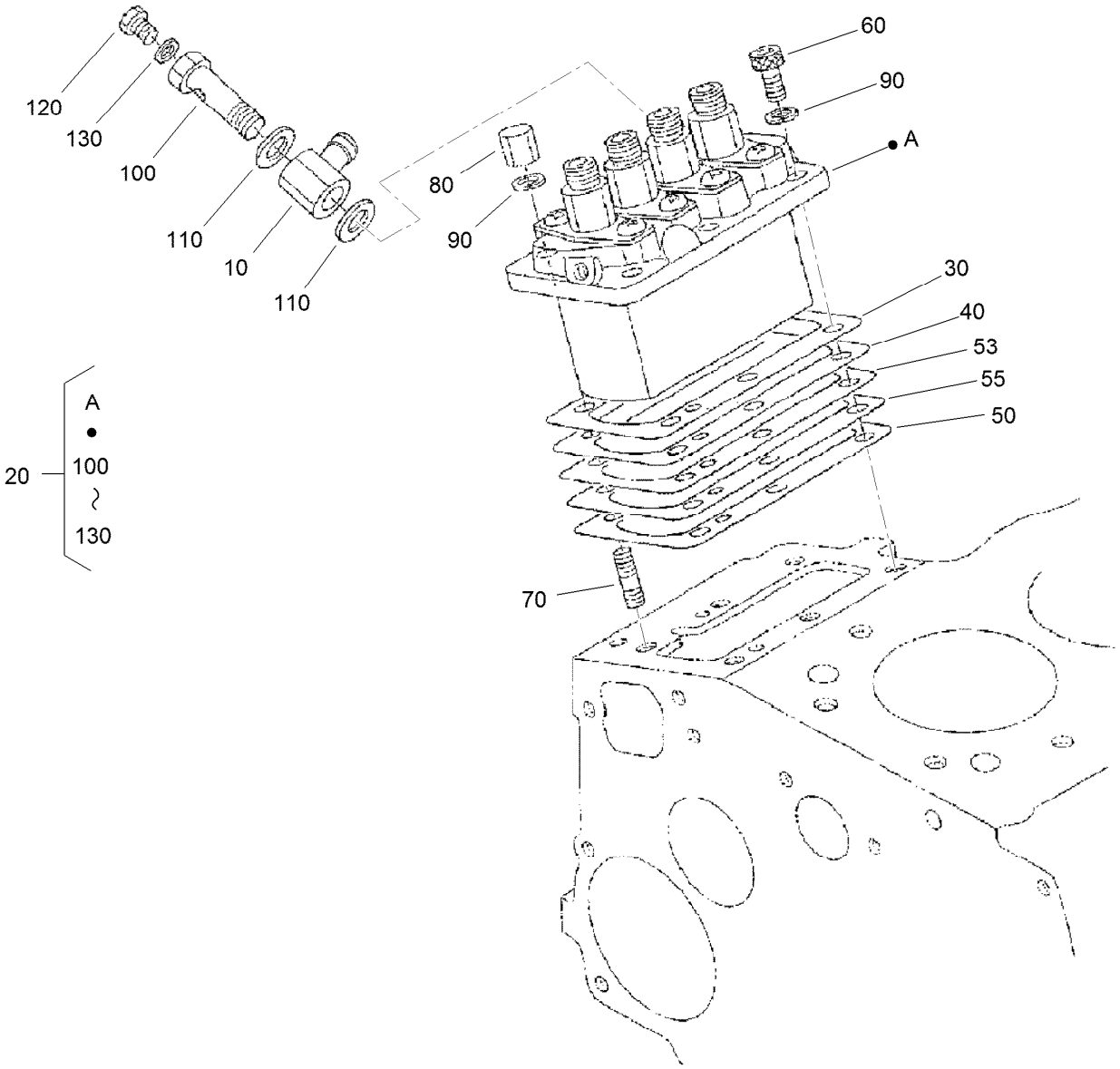

Injection Pump Assembly

Ref.	*Part Number*	*Qty.*	*Description*
10	98-9596	1	Joint-Eye
20	105-3727	1	Injection Pump ASM
30	105-3728	1	Shim-Pump, Injection (.20MM)
40	105-3729	1	Shim-Pump, Injection (.25MM)
50	105-3730	1	Shim-Pump, Injection (.30MM)
53	115-3016	1	Shim-Pump, Injection (.350MM)
55	115-3017	1	Shim-Pump, Injection (.175MM)
60	98-9361	3	Bolt-HSH
70	98-9438	3	Stud
80	98-9440	3	Nut-Cap
90	98-7699	6	Washer-Spring
100	98-9464	1	Bolt-Joint
110	98-9445	2	Gasket
120	98-9430	1	Screw
130	98-9446	1	Gasket

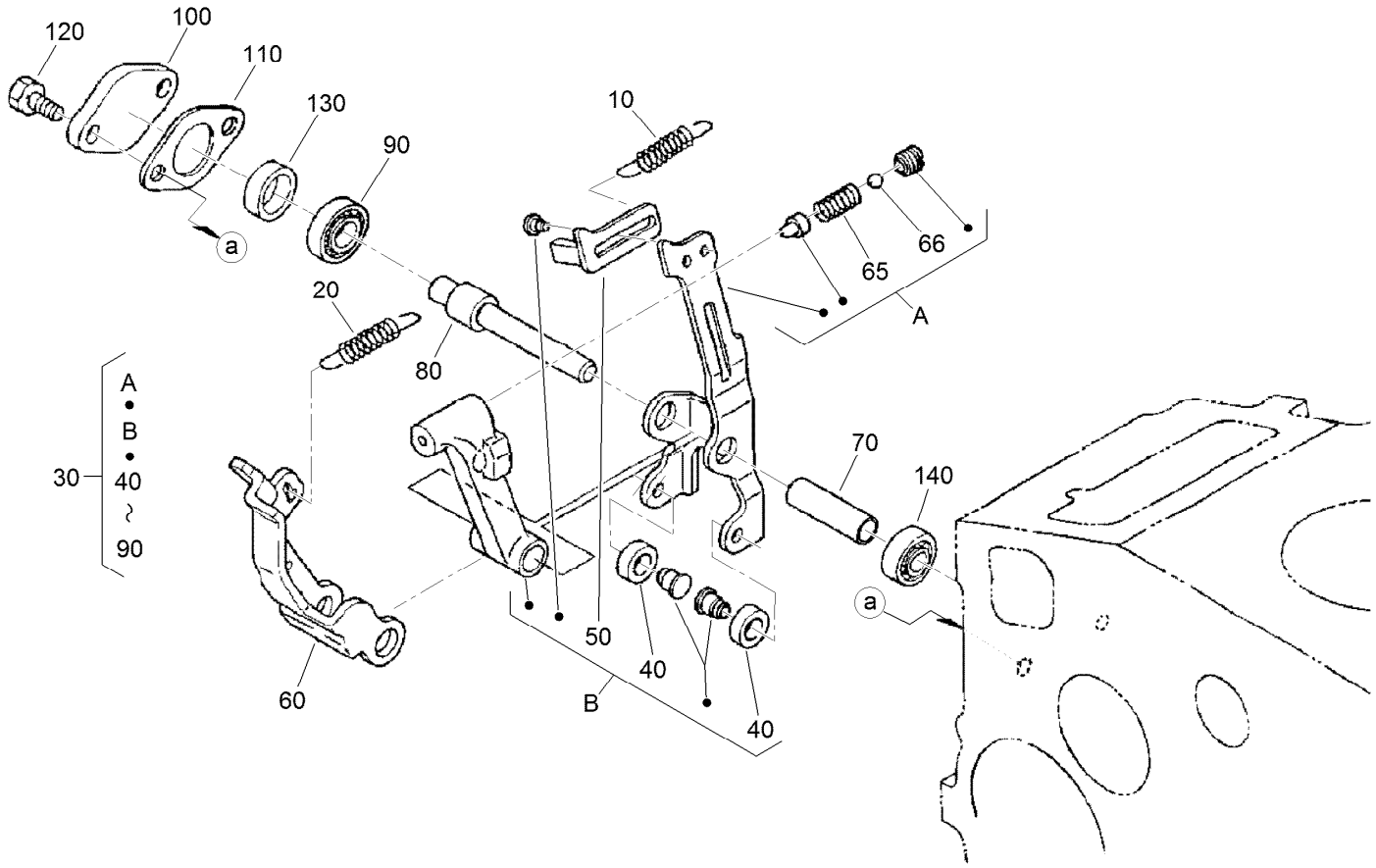

Governor Assembly

Ref.	Part Number	Qty.	Description
10	105-3741	1	Spring-Start
20	98-9681	1	Spring-Governor
30	115-4502	1	Fork Lever ASM
40	98-9692	2	Roller
50	107-9083	1	Lever-Thrust
60	107-9084	1	Lever-Fork
65	108-2867	1	Spring
66	98-7580	2	Ball

Ref.	Part Number	Qty.	Description
70	107-9085	1	Shaft-Lever, Fork
80	107-9086	1	Shaft-Lever, Fork
90	98-9570	1	Bearing-Miniaturize
100	115-4122	1	Cover-Shaft, Fork Lever
110	98-9682	1	Gasket
120	98-9350	2	Bolt
130	98-9567	1	Collar
140	98-9571	1	Bearing-Miniaturize

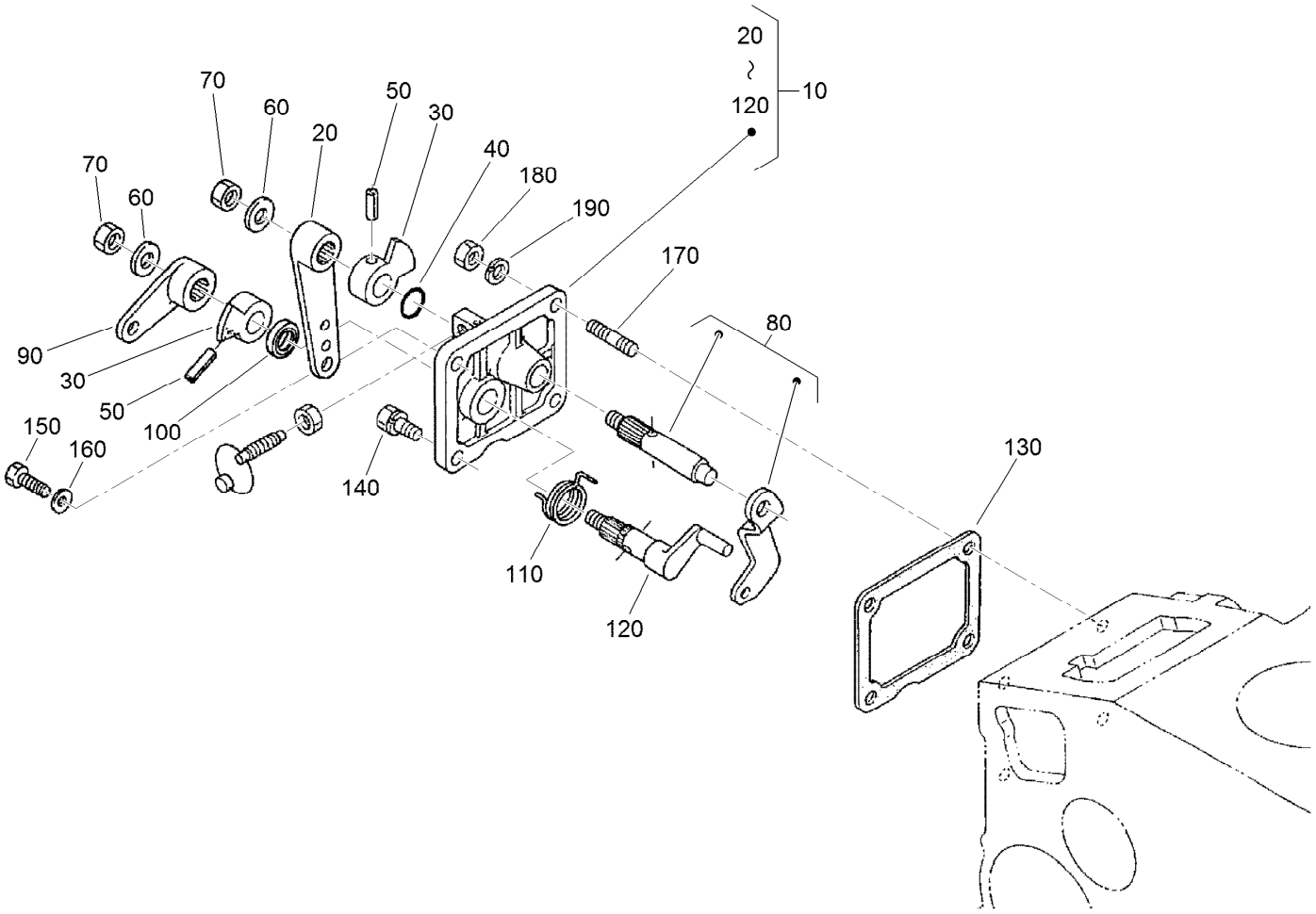

Speed Control Plate Assembly

Ref.	Part Number	Qty.	Description
10	105-3735	1	Control Plate ASM
20	98-9662	1	Lever-Control, Speed
30	98-9572	2	Lever-Control, Speed
40	105-3788	1	O-Ring
50	98-7602	2	Pin-Spring
60	98-9594	2	Washer-Plain
70	98-9589	2	Nut
80	98-9658	1	Governor Lever ASM
90	98-9663	1	Lever-Stop, Engine
100	98-7601	1	Seal-Oil

Ref.	Part Number	Qty.	Description
110	98-9472	1	Spring-Return
120	98-9664	1	Shaft-Lever, Stop
130	98-9637	1	Gasket
140	98-7692	1	Bolt
150	99-8348	1	Bolt
160	98-7654	2	Gasket
170	105-3710	2	Stud
180	98-7572	2	Nut
190	98-7699	2	Washer-Spring

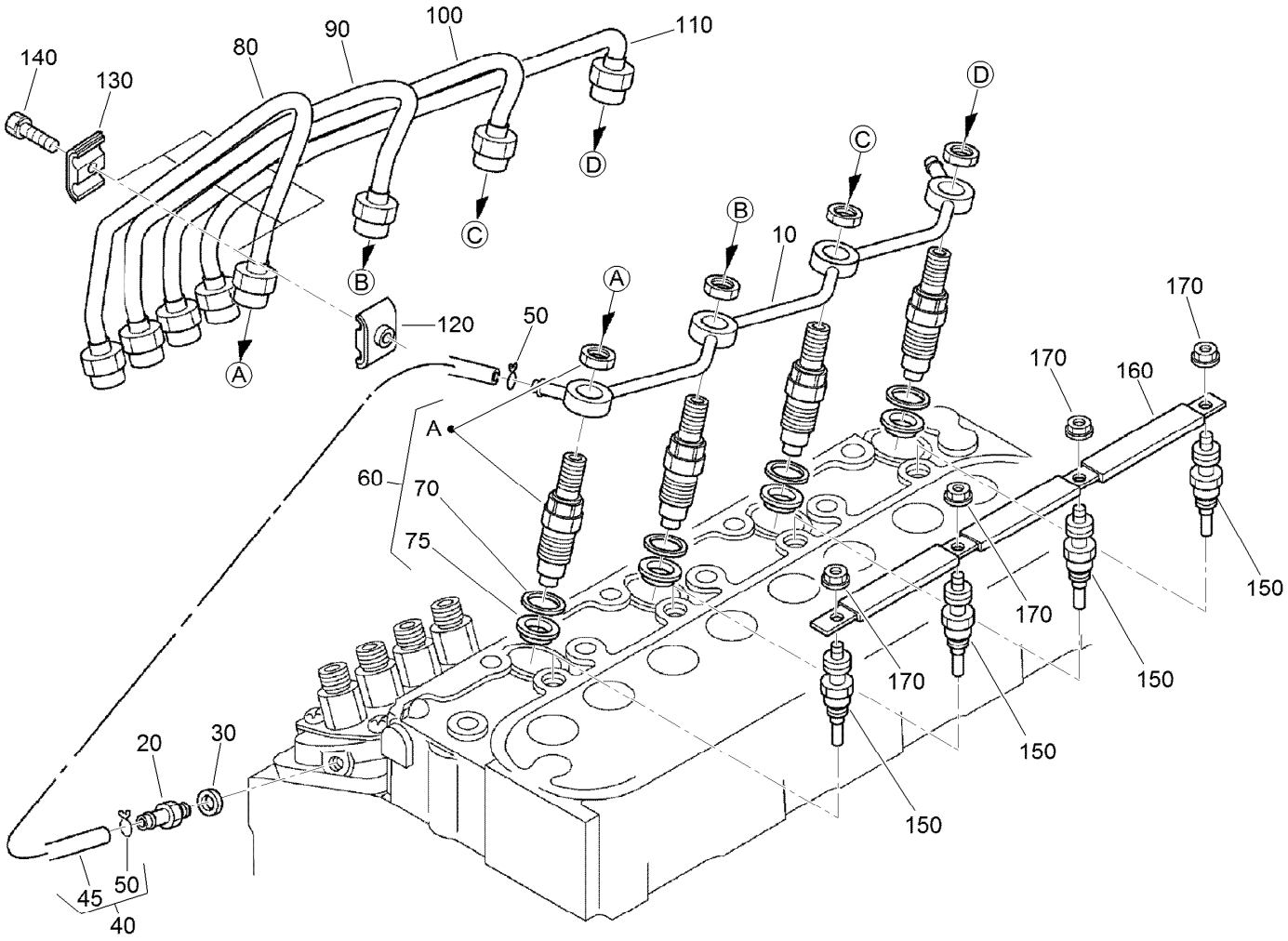

Nozzle Holder and Glow Plug Assembly

Ref.	Part Number	Qty.	Description
10	105-3737	1	Over Flow Pipe ASM
20	98-9431	1	Screw-Bleeder, Air
30	98-7654	1	Gasket
40	98-9420	1	Overflow Pipe ASM
45	112-0182	1	Pipe-Overflow
50	98-7671	2	Clip-Pipe
60	115-3018	4	Nozzle Holder Kit
70	98-7676	4	Gasket
75	98-7677	4	Seal-Heat
80	98-9653	1	Pipe-Injection
90	98-9654	1	Pipe-Injection
100	98-9655	1	Pipe-Injection
110	105-3738	1	Pipe-Injection
120	98-7682	3	Clamp-Pipe
130	98-7683	3	Clamp-Pipe
140	98-7684	3	Screw (W/Washer)
150	115-3019	4	Plug-Glow
160	105-3739	1	Cord-Plug, Glow
170	99-8377	4	Nut-Flange

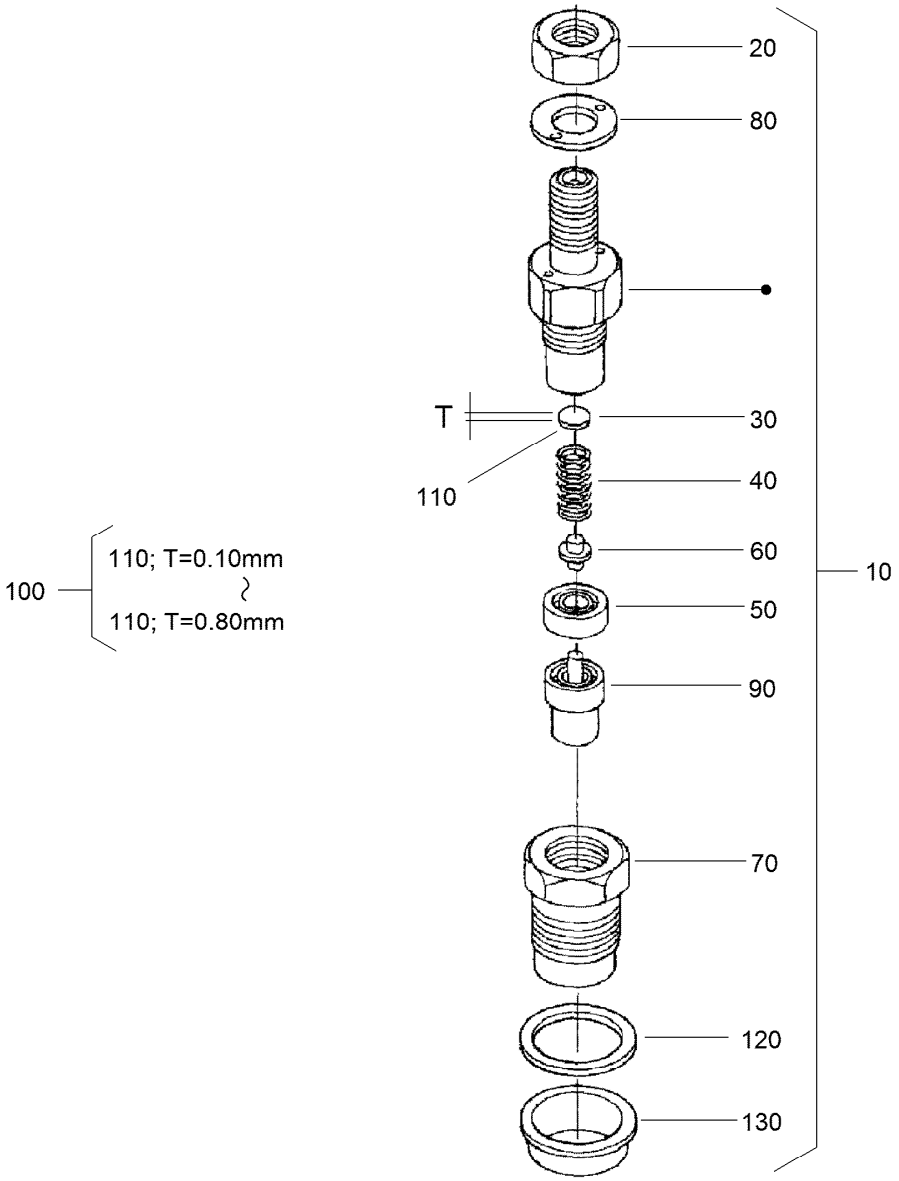

Nozzle Holder Component Assembly

Ref.	Part Number	Qty.	Description
10	115-3018	4	Nozzle Holder Kit
20	99-8301	4	Nut
30	99-8302	4	Washer-Adjusting
40	99-8303	4	Spring-Nozzle
50	99-8304	4	Spacer-Distance
60	99-8305	4	Rod-Push
70	99-8306	4	Nut-Nozzle
80	99-8307	4	Washer-Plain
90	115-3020	4	Piece-Nozzle
100	99-8309	4	Adjusting Washer ASM
110	99-8310	4	Washer-Adjust (0.10MM)

Ref.	Part Number	Qty.	Description
110	99-8311	4	Washer-Adjust (0.20MM)
110	99-8312	4	Washer-Adjust (0.30MM)
110	99-8313	4	Washer-Adjust (0.40MM)
110	99-8314	4	Washer-Adjust (0.50MM)
110	99-8315	4	Washer-Adjust (0.52MM)
110	99-8316	4	Washer-Adjust (0.54MM)
110	99-8317	4	Washer-Adjust (0.56MM)
110	99-8318	4	Washer-Adjust (0.58MM)
110	99-8319	4	Washer-Adjust (0.80MM)
120	98-7676	4	Gasket
130	98-7677	4	Seal-Heat

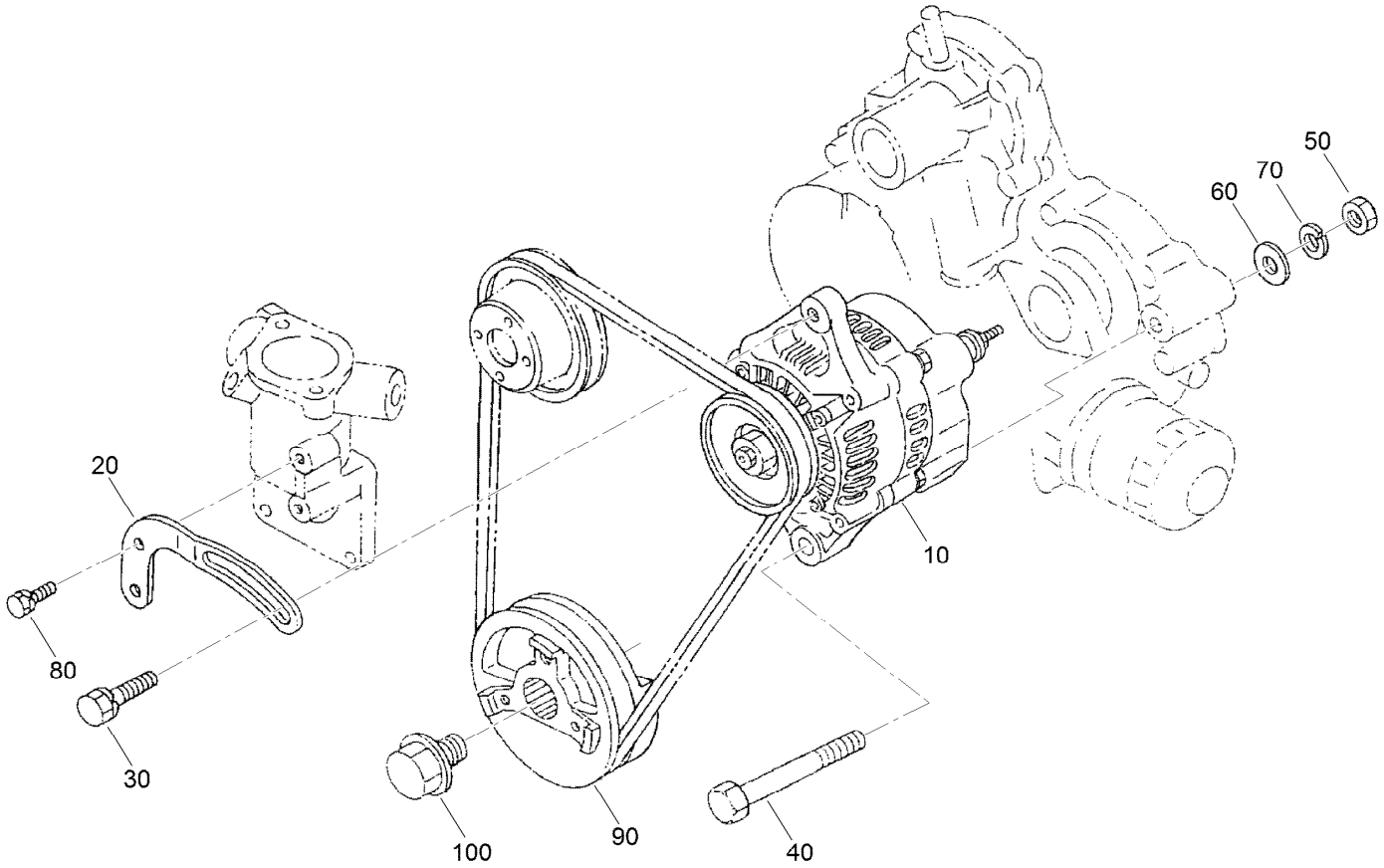

Alternator and Pulley Assembly

Ref.	*Part Number*	*Qty.*	*Description*
10	98-9474	1	Alternator ASM
20	112-7047	1	Stay-Dynamo
30	108-7088	1	Bolt
40	98-9360	1	Bolt
50	98-7737	1	Nut
60	98-9366	1	Washer-Plain
70	98-7738	1	Washer-Spring
80	98-7692	1	Bolt
90	105-3745	1	Pulley-Drive, Fan
100	98-9585	1	Bolt

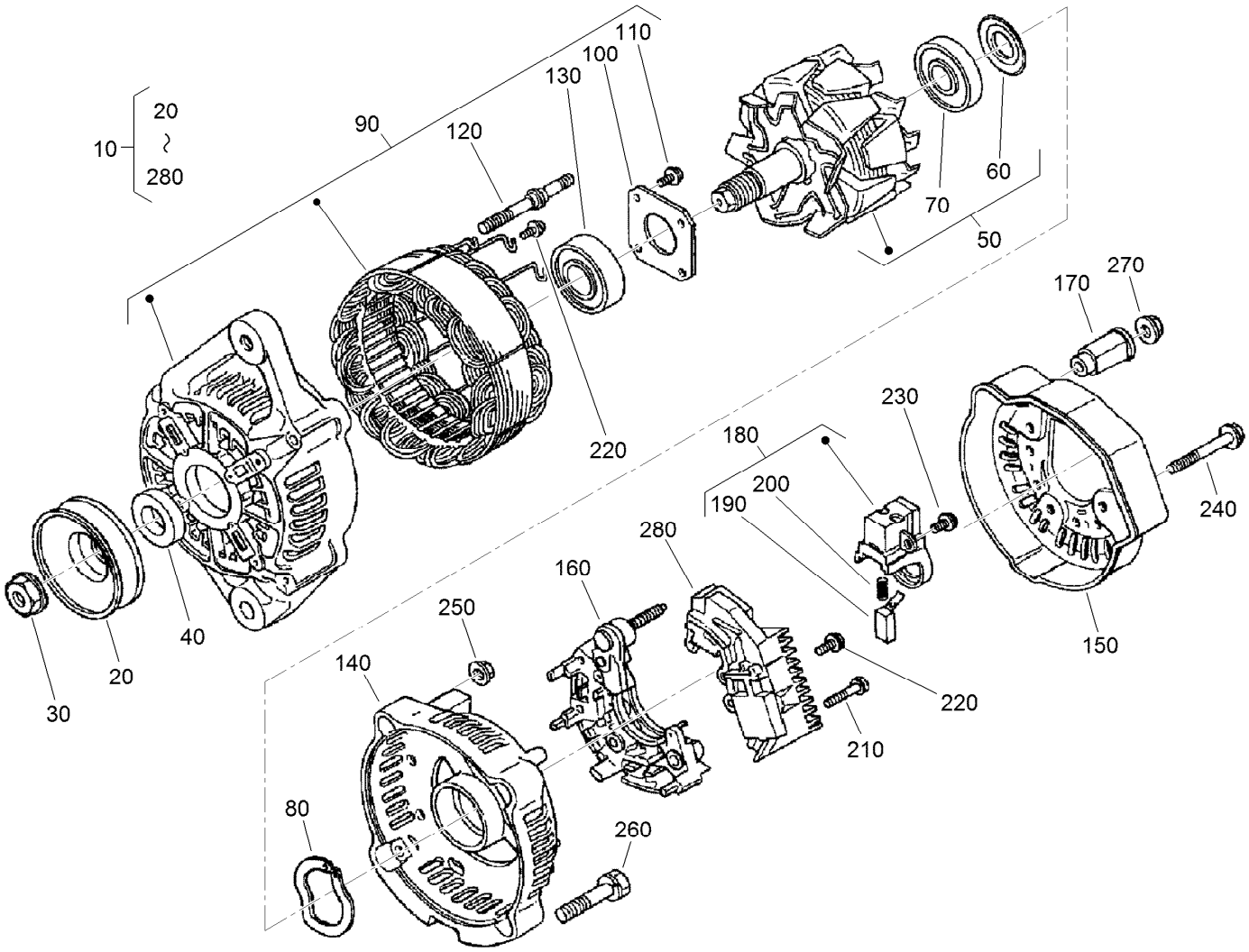

Alternator Components Assembly

Ref.	Part Number	Qty.	Description
10	98-9474	1	Alternator ASM
20	98-9453	1	Pulley-Dynamo
30	98-7708	1	Nut
40	98-7709	1	Collar
50	107-0136	1	Rotor ASM
60	98-7711	1	Cover-Bearing
70	107-0138	1	Bearing-Ball
80	98-7713	1	Washer-Thrust
90	107-0139	1	Drive End Frame ASM
100	98-7715	1	Plate-Retainer
110	98-7716	4	Screw-Head, Round
120	98-7717	2	Bolt-Through
130	133-2811	1	Bearing
140	107-9087	1	Frame-End

Ref.	Part Number	Qty.	Description
150	107-0140	1	Cover-End
160	98-7721	1	Rectifier ASM
170	98-7722	1	Bushing-Insulation
180	107-0141	1	Brush Holder ASM
190	98-7724	2	Brush
200	98-7725	2	Spring-Brush
210	98-7726	2	Screw-Head, Round
220	98-7727	6	Screw-Head, Round
230	98-7728	1	Screw-Head, Round
240	98-7729	3	Bolt
250	98-7730	2	Nut
260	98-7731	2	Bolt
270	98-7732	1	Nut
280	110-3799	1	Regulator ASM

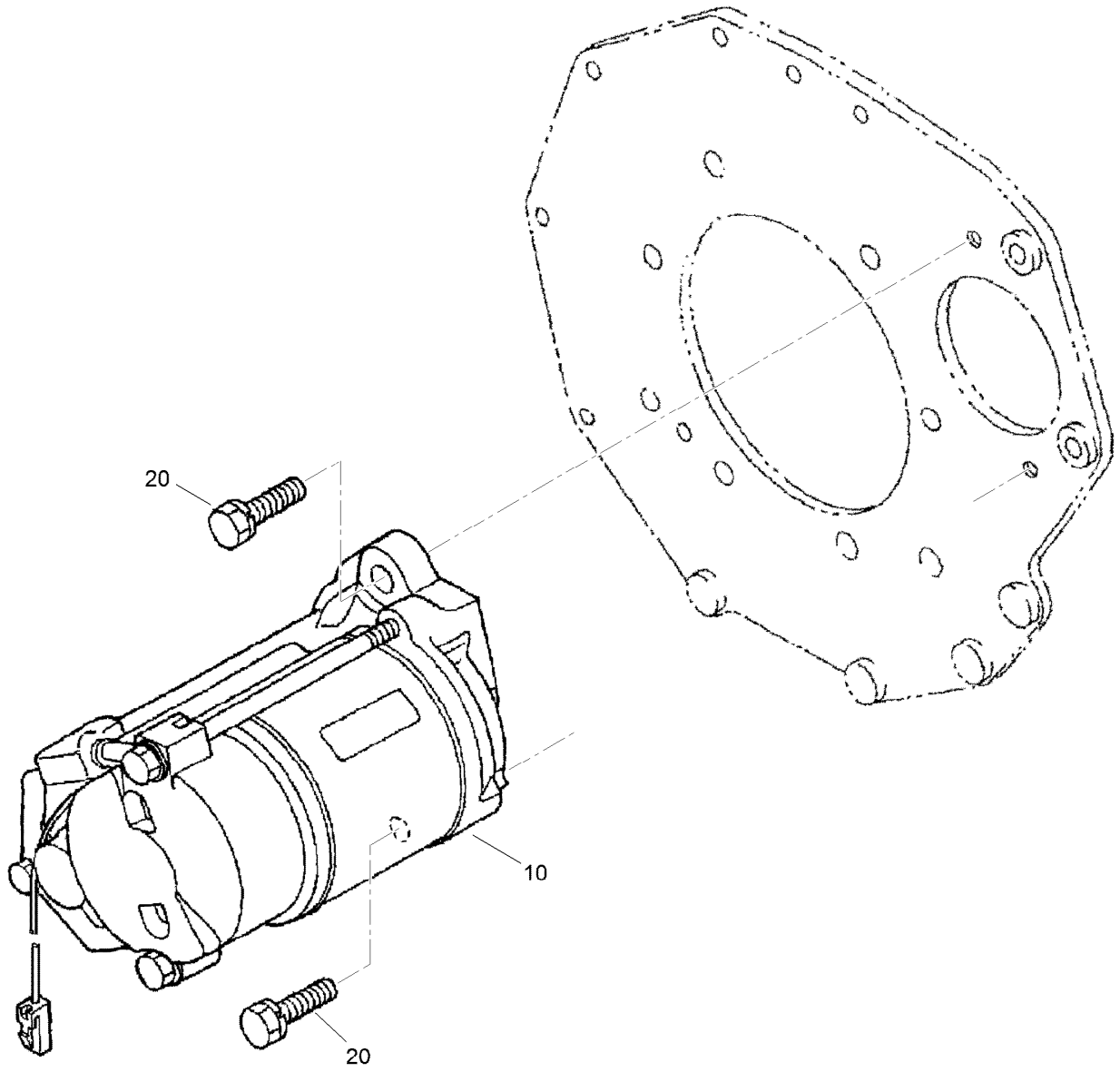

Starter Assembly

Ref.	*Part Number*	*Qty.*	*Description*
10	98-9705	1	Starter ASM
20	98-7697	2	Bolt

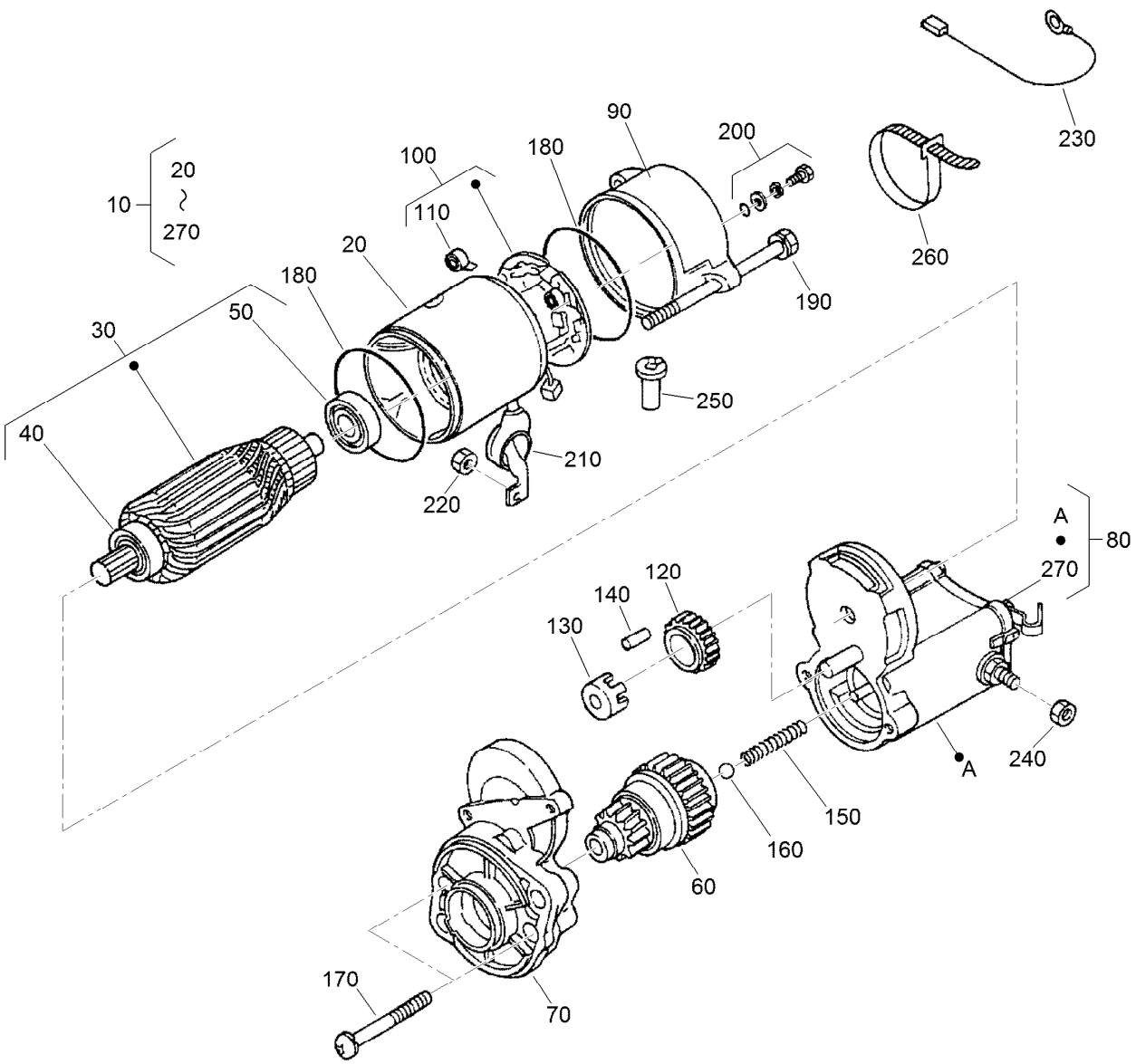

Starter Component Part Assembly No. 111-7496

Ref.	Part Number	Qty.	Description
10	98-9705	1	Starter ASM
20	104-8608	1	Yoke ASM
30	98-7742	1	Armature ASM
40	98-7744	1	Bearing
50	98-7743	1	Bearing
60	99-8373	1	Clutch-Running, Over
70	99-8374	1	Frame-End, Drive
80	105-3746	1	Magnetic Switch ASM
90	98-7748	1	Frame-End
100	98-7749	1	Brush Holder ASM
110	98-7750	4	Spring-Brush
120	98-7751	1	Gear
130	98-7752	1	Retainer
140	98-7753	5	Roller

Ref.	Part Number	Qty.	Description
150	98-7754	1	Spring
160	98-7755	1	Ball
170	98-7756	2	Bolt
180	98-7757	2	O-Ring
190	100-9240	2	Bolt
200	98-7758	2	Bolt ASM
210	99-8375	1	Cover
220	99-8371	1	Nut-Hex
230	98-9711	1	Cord-Solenoid, Stop
240	99-8376	1	Nut-Hex
250	98-7759	1	Pipe-Drain
260	98-9712	1	Band-Cover
270	105-2886	1	Cover ASM

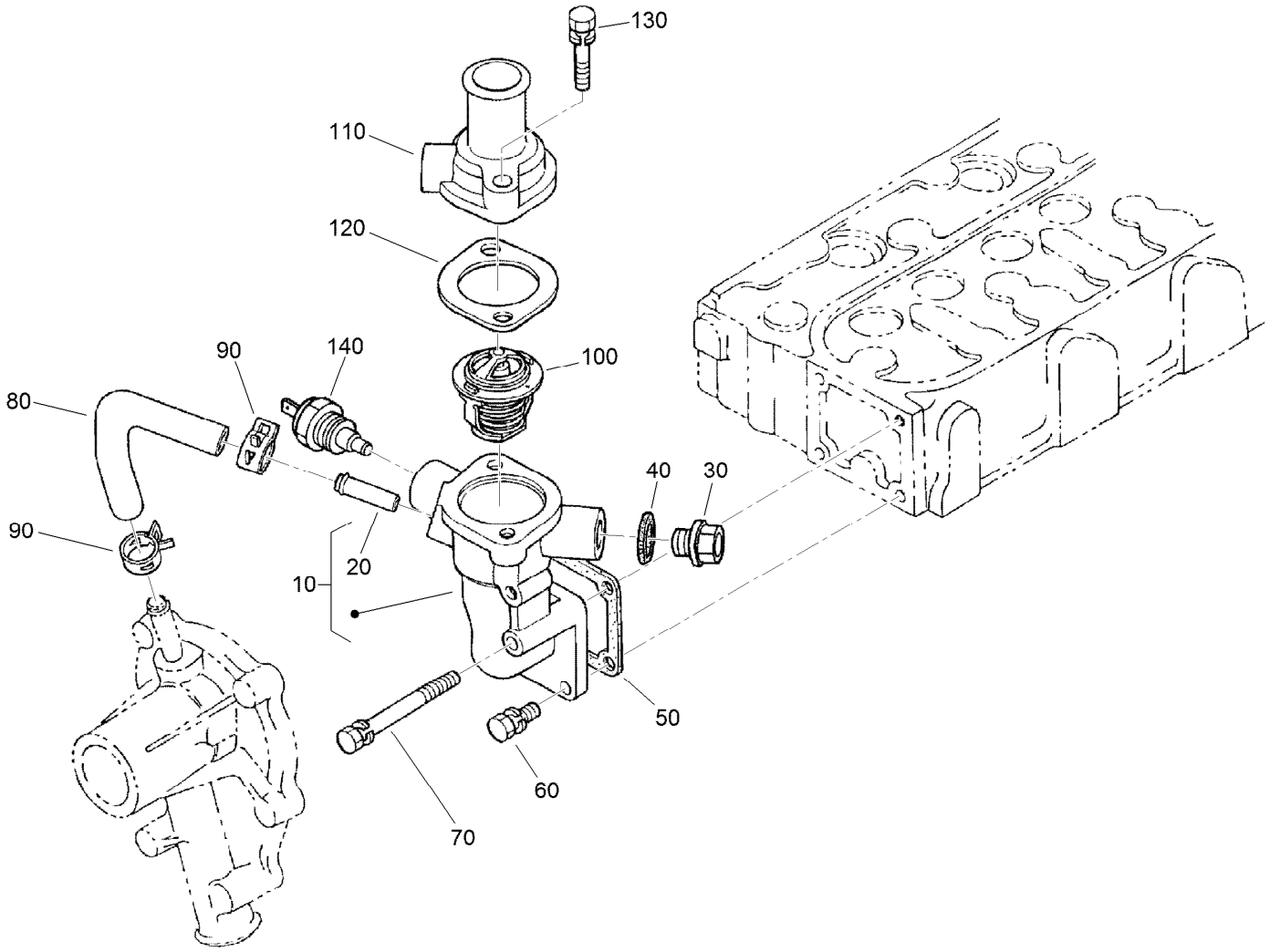

Thermostat Assembly

Ref.	*Part Number*	*Qty.*	*Description*
10	98-9713	1	Water Flange ASM
20	98-9580	1	Pipe-Return, Water
30	105-3747	1	Plug
40	99-3583	1	Gasket
50	98-9638	1	Gasket-Flange, Water
60	98-7692	3	Bolt
70	98-9356	1	Bolt
80	98-9578	1	Pipe-Return, Water
90	98-9579	2	Band-Pipe
100	98-7778	1	Thermostat ASM
110	98-9471	1	Cover-Thermostat
120	105-3748	1	Gasket-Thermostat
130	98-7777	2	Bolt
140	112-0183	1	Switch-Thermometer

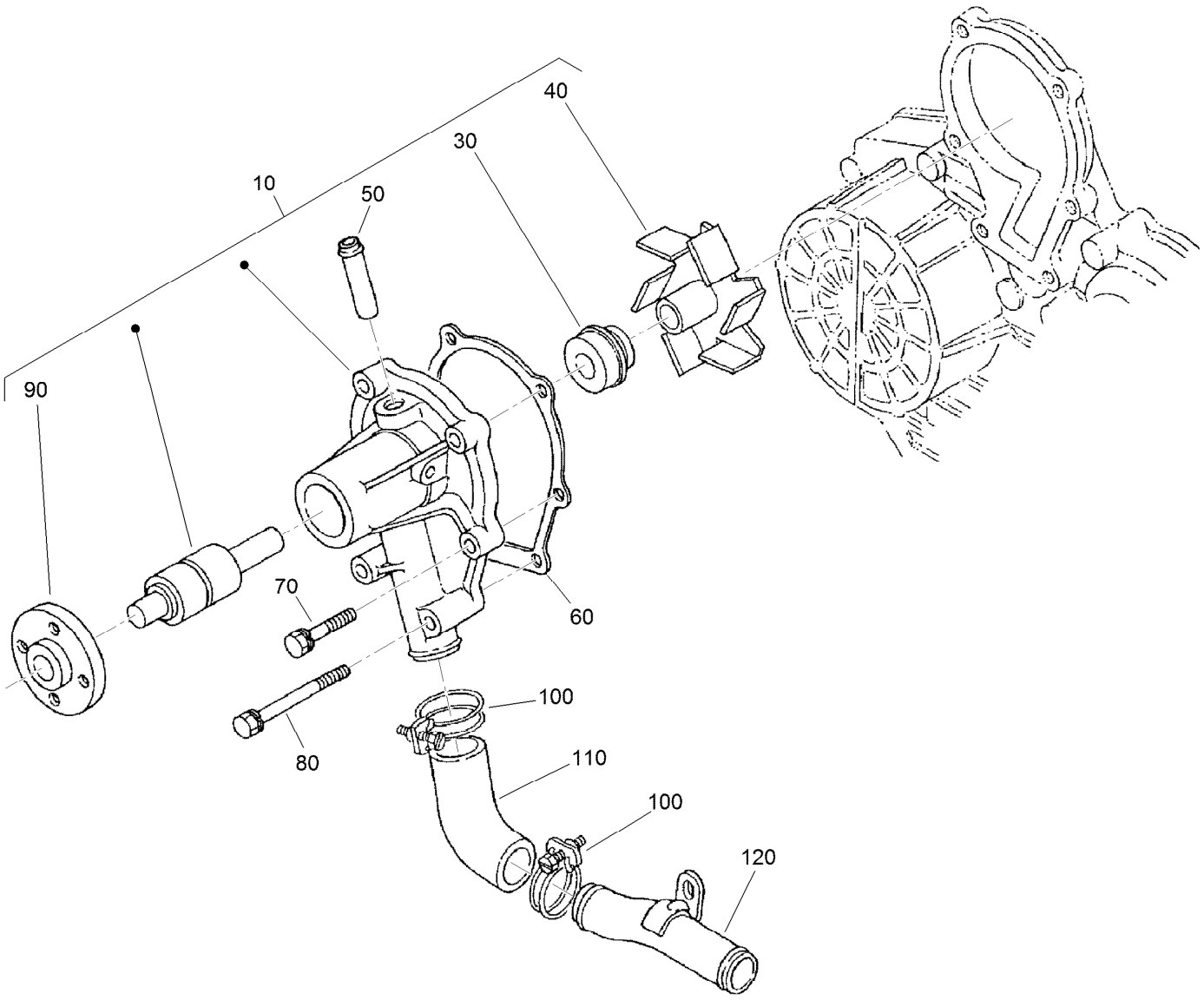

Water Pump Assembly

Ref.	*Part Number*	*Qty.*	*Description*
10	107-9089	1	Water Pump ASM
30	105-3750	1	Mechanical Seal ASM
40	112-7017	1	Impeller-Pump, Water
50	100-1932	1	Pipe-Return, Water
60	99-3454	1	Gasket-Pump, Water
70	98-9353	4	Bolt
80	107-9090	2	Bolt
90	99-3516	1	Flange-Pump, Water
100	98-9717	2	Clamp
110	107-9091	1	Pipe-Water
120	98-9716	1	Pipe-Water

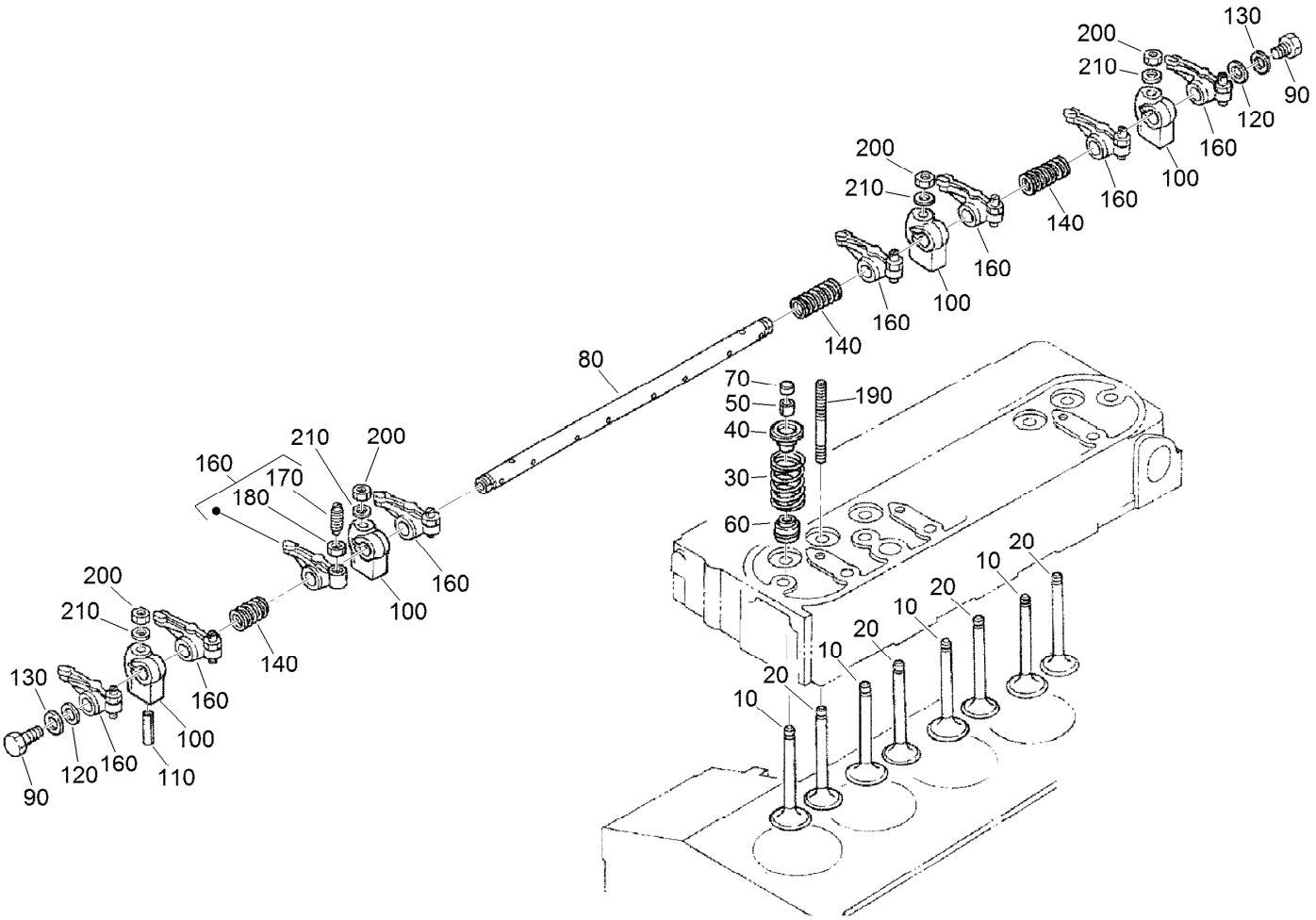

Valve and Rocker Arm Assembly

Ref.	Part Number	Qty.	Description
10	112-7018	4	Valve-Inlet
20	112-7021	4	Valve-Exhaust
30	98-9648	8	Spring-Valve
40	107-9092	8	Retainer-Spring
50	98-9390	8	Collet-Spring, Valve
60	99-8385	8	Seal-Stem, Valve
70	98-9497	8	Cap-Valve
80	105-3790	1	R-Arm Shaft ASM
90	100-1762	2	Bolt
100	98-9505	4	Bracket-Arm, Rocker

Ref.	Part Number	Qty.	Description
110	105-3758	1	Pin-Spring
120	98-9507	2	Washer-Shaft, Rocker Arm
130	110-3832	2	Washer-Plain
140	98-9504	2	Spring-Arm, Rocker
160	112-7020	8	Rocker Arm ASM
170	98-9502	8	Screw-Adjusting
180	98-9503	8	Nut
190	98-9506	4	Stud
200	98-9393	4	Nut
210	98-9385	4	Washer-Flat

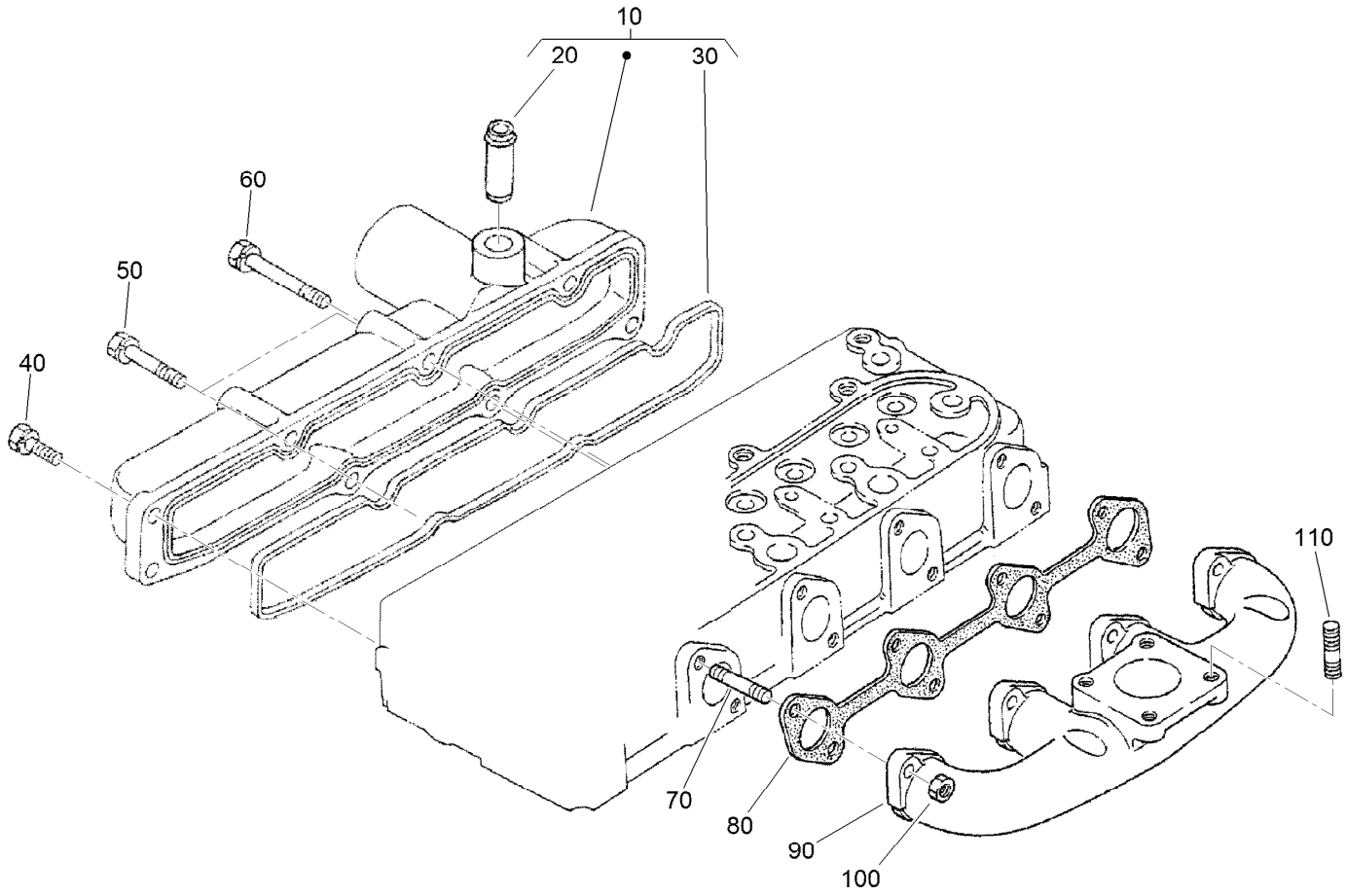

Intake and Exhaust Manifold Assembly

Ref.	*Part Number*	*Qty.*	*Description*
10	108-2874	1	Intake Manifold ASM
20	98-9492	1	Joint-Pipe, Breather
30	105-3760	1	Gasket-Manifold, Intake
40	98-7605	3	Bolt
50	98-9353	2	Bolt
60	105-3797	3	Bolt
70	98-9588	8	Stud
80	105-3765	1	Gasket-Manifold, Exhaust
90	112-0187	1	Manifold-Exhaust
100	98-9665	8	Nut
110	98-7769	4	Stud

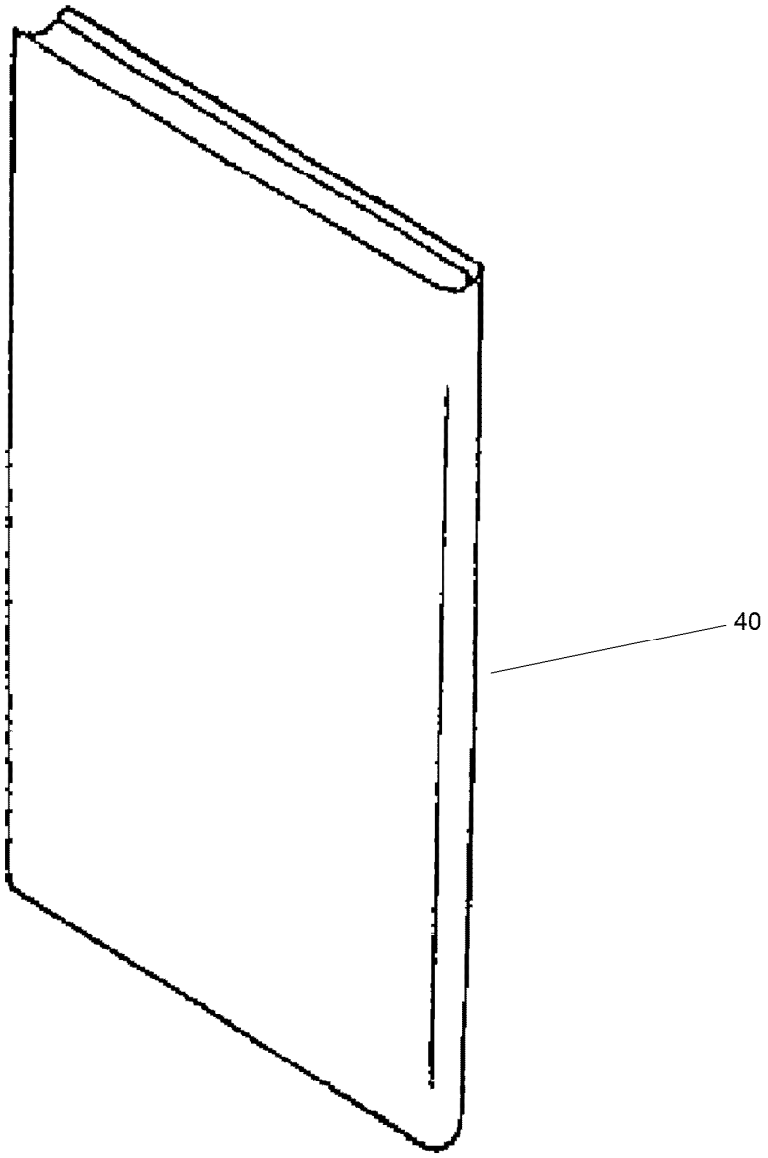

Muffler Gasket and Operator Manual Assembly

Ref.	*Part Number*	*Qty.*	*Description*
40	115-4104	1	Operator Manual

Attachments and Accessories

For 03964 — Reelmaster 5510-D Traction Unit

Product Name	Model/Part
Operator Cooling Fan	03247
Switch Panel-Universal Sunshade	03248
Operator Golf Ball Guard, Reelmaster 3100/3500/5010 or Groundsmaster 3500/4300 Series Traction Unit	03614
Verticutter for 7in Reel Cutting Unit	03619
8-Blade Radial Reel DPA Cutting Unit with 7in Reel	03638
8-Blade Forward Swept Reel DPA Cutting Unit with 7in Reel	03639
11-Blade Forward Swept Reel DPA Cutting Unit with 7in Reel	03641
7-in, 11 Blade ES (RR) DPA Cutting Unit	03643
CrossTrax All-Wheel Drive Kit, Reelmaster 5010-H, 5410-D, or 5510-D Series Traction Unit	03645
Air Ride Seat Suspension Kit	03667
Turf Evaluator	04399
Wheel Weight Kit	104-1478
Premium All Purpose Grease (Tube)	108-1190
5in Air Cleaner Safety Element	114-4057
Premium Engine Oil 10w30 (55 Gallon Drum)	121-6392
Premium Engine Oil 10w30 (5 Gallon Pail)	121-6393
Smooth Rear Tire	127-2796
Hi-Back Seat Cover	133-1308
Smooth Front Tire	133-2940
PX Hydraulic Fluid (5 Gal)	133-8086
PX Hydraulic Fluid (55 Gal)	133-8087
Pin and Lanyard Asm	136-8045
Beacon Kit	138-2699
Power Harness Kit (RM5XXX)	138-2994
Work Lights Kit, Groundsmaster and Reelmaster Traction Units with Universal Sunshade	140-1554
MVP Kit-Hyd Hose	145-2576
MVP Kit 1000 Hour-RM5510 Kubota V1505	145-2578
Cylinder Retraction Limit Kit	164-1874
Brush and Handle Kit	29-9100
White Universal Sunshade	30669
Red Universal Sunshade	30671
EU Light Kit	31579
New Red Paint - Gallon	361-11
Dark Metallic Gray Aerosol Paint	361-12
Semi-Gloss Black Spray Paint	361-9
Air Dry Red Paint - Qt	5340
Spark Arrestor	98-9099

Notes:

Notes:

Notes:



Count on it.