Form No. 3484-829 Rev A

TORO®

Count on it.

Operator's Manual

Dingo® TXL 2000 Tool Carrier

Model No. 22530—Serial No. 422200000 and Up

Model No. 22531—Serial No. 419000000 and Up

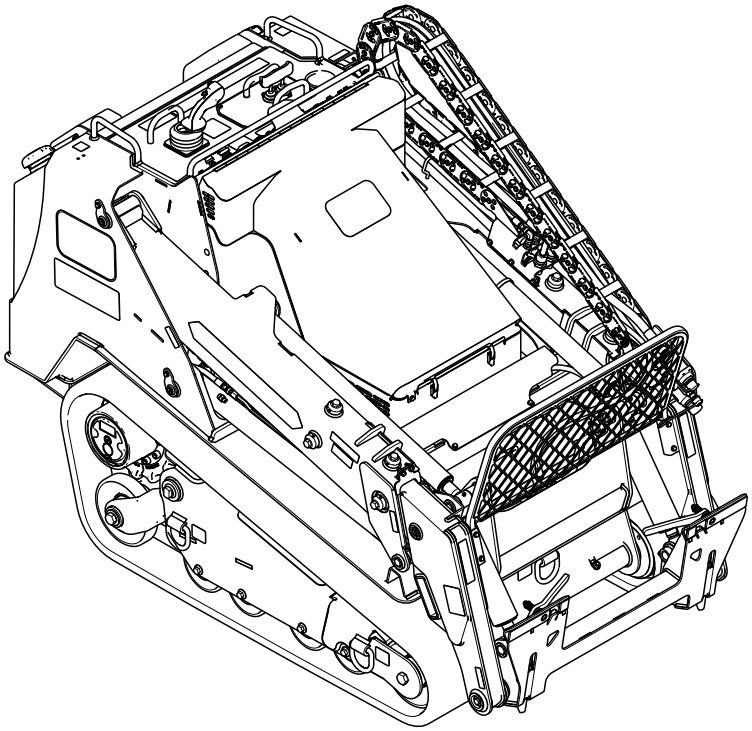

Register at www.Toro.com.
Original Instructions (EN)

3484-829

It is a violation of California Public Resource Code Section 4442 or 4443 to use or operate the engine on any forest-covered, brush-covered, or grass-covered land unless the engine is equipped with a spark arrester, as defined in Section 4442, maintained in effective working order or the engine is constructed, equipped, and maintained for the prevention of fire.

The enclosed engine owner's manual is supplied for information regarding the US Environmental Protection Agency (EPA) and the California Emission Control Regulation of emission systems, maintenance, and warranty. Replacements may be ordered through the engine manufacturer.

⚠ WARNING

CALIFORNIA
Proposition 65 Warning

Diesel engine exhaust and some of its constituents are known to the State of California to cause cancer, birth defects, and other reproductive harm.

Battery posts, terminals, and related accessories contain lead and lead compounds, chemicals known to the State of California to cause cancer and reproductive harm. Wash hands after handling.

Use of this product may cause exposure to chemicals known to the State of California to cause cancer, birth defects, or other reproductive harm.

Introduction

This machine is a tool carrier intended for use in various earth and materials moving activities for landscaping and construction work. It is designed to operate a wide variety of attachments, each of which perform a specialized function. Using this product for purposes other than its intended use could prove dangerous to you and bystanders. Do not modify the machine or attachments.

This machine should be operated, serviced, and repaired only by professionals familiar with its characteristics and acquainted with the relevant safety procedures.

Operate this machine in ambient temperatures from -18 to 38°C (0 to 100 °F). Contact your Authorized Service Dealer for provisions required for operating in extreme temperatures.

Read this information carefully to learn how to operate and maintain your product properly and to avoid injury and product damage. You are responsible for operating the product properly and safely.

Visit www.Toro.com for product safety and operation training materials, accessory information, help finding a dealer, or to register your product.

Whenever you need service, genuine Toro parts, or additional information, contact an Authorized Service Dealer or Toro Customer Service and have the model and serial numbers of your product ready. Figure 1 identifies the location of the model and serial numbers on the product. Write the numbers in the space provided.

Important: **With your mobile device, you can scan the QR code on the serial number decal (if equipped) to access warranty, parts, and other product information.**

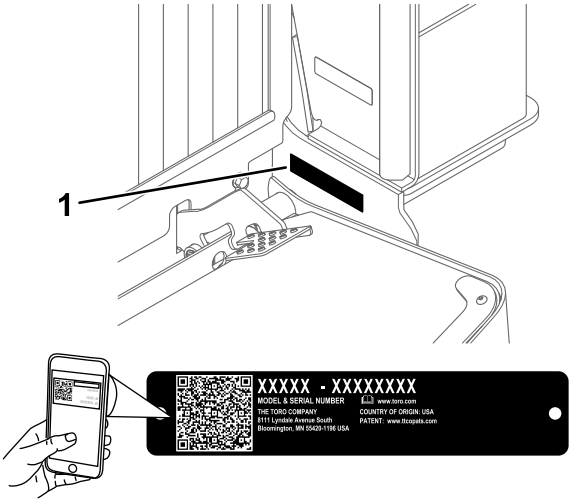

g616962

Figure 1

1. Model and serial number location

Model No. _____

Serial No. _____

© 2026—The Toro® Company
8111 Lyndale Avenue South
Bloomington, MN 55420

Contact us at www.Toro.com.
Printed in the USA
All Rights Reserved

This manual identifies potential hazards and has safety messages identified by the safety-alert symbol (Figure 2), which signals a hazard that may cause serious injury or death if you do not follow the recommended precautions.

g000502

Figure 2

Safety-alert symbol

The safety-alert symbol appears above information that alerts you to unsafe actions or situations and is followed by the word **DANGER**, **WARNING**, or **CAUTION**.

DANGER indicates an imminently hazardous situation which, if not avoided, **will** result in death or serious injury.

WARNING indicates a potentially hazardous situation which, if not avoided, **could** result in death or serious injury.

CAUTION indicates a potentially hazardous situation which, if not avoided, **may** result in minor or moderate injury.

This manual uses two other words to highlight information. **Important** calls attention to special mechanical information and **Note** emphasizes general information worthy of special attention.

Contents

Safety 4
General Safety 4
Safety and Instructional Decals 5
Product Overview 12
Controls 12
Joystick Controls 15
InfoCenter Display 16
Specifications 20
Attachments/Accessories 20
Before Operation 21
Before Operation Safety 21
Adding Fuel 21
Performing Daily Maintenance 22
During Operation 23
During Operation Safety 23
Starting the Engine 24
Driving the Machine 25
Shutting Off the Engine 25
Using Attachments 25
Understanding Smart Power® Traction 27
Understanding the Smart Load System 27
After Operation 27
After Operation Safety 27
Retrieving a Stuck Machine 27
Moving a Non-Functioning Machine 28
Hauling the Machine 29
Lifting the Machine 31
Maintenance 32
Maintenance Safety 32
Recommended Maintenance Schedule(s) 32
Pre-Maintenance Procedures 34
Using the Cylinder Lock 34
Accessing Internal Components 35
Removing the Front Cover Assembly 36
Lubrication 37
Lubricating the Machine 37
Engine Maintenance 38
Engine Safety 38
Servicing the Air Cleaner 38
Servicing the Engine Oil 39
Fuel System Maintenance 41
Draining the Water Separator 41
Replacing the Water Separator Filter 42
Replacing the Fuel Filter Canister 42
Checking the Fuel Lines and Connections 42
Bleeding the Fuel System 43
Draining the Fuel Tank(s) 43
Electrical System Maintenance 43
Electrical System Safety 43
Using the Battery-Disconnect Switch 43
Servicing the Battery 44
Jump-Starting the Machine 45
Servicing the Fuses 47
Drive System Maintenance 48
Replacing the Drive-Motor Planetary Gear Oil 48
Servicing the Tracks 49
Cooling System Maintenance 52
Cooling System Safety 52
Servicing the Cooling System 52
Changing the Engine Coolant 53
Belt Maintenance 53
Checking and Adjusting the Alternator Belt Tension 53
Controls System Maintenance 54
Adjusting the Controls 54
Hydraulic System Maintenance 54
Hydraulic System Safety 54
Relieving Hydraulic Pressure 54
Hydraulic-Fluid Specifications 55
Checking the Hydraulic-Fluid Level 55
Replacing the Hydraulic Filters 56
Changing the Hydraulic Fluid 57
Loader Maintenance 58
Torquing the Loader Arm Adjustment Screws 58
Cleaning 59
Removing Debris 59

Cleaning the Chassis 59
Storage 60
Storage Safety 60
Storage 60
Decommissioning the Machine 60
Troubleshooting 61

Safety

General Safety

⚠ DANGER

There may be buried utility lines in the work area. Digging into them may cause a shock or an explosion.

Have the property or work area marked for buried lines and do not dig in marked areas. Contact your local marking service or utility company to have the property marked (for example, in the US, call 811 or in Australia, call 1100 for the nationwide marking service).

Always follow all safety instructions to avoid serious injury or death.

- Do not exceed the rated operating capacity, as the machine may become unstable, which may result in loss of control.
- Do not transport a load with the arms raised or extended; always transport loads close to the ground, with the loader arms retracted.
- Slopes are a major factor related to loss-of-control and tip-over accidents, which can result in severe injury or death. **Operating the machine on any slope or uneven terrain requires extra caution.**
- **Operate the machine up and down slopes with the heavy end of the machine uphill and the load close to the ground and the loader arms retracted.** Weight distribution changes with attachments. An empty load-bearing attachment makes the rear of the machine the heavy end, and a full load-bearing attachment makes the front of the machine the heavy end. Most other attachments make the front of the machine the heavy end.
- Have the property or work area marked for buried lines and other objects, and do not dig in marked areas.
- Read and understand the content of this *Operator's Manual* before starting the engine.
- Use your full attention while operating the machine. Do not engage in any activity that causes distractions; otherwise, injury or property damage may occur.
- Never allow children or untrained people to operate the machine.
- Keep your hands and feet away from the moving components and attachments.
- Do not operate the machine without the guards and other safety protective devices in place and working on the machine.

- Keep bystanders and pets away from the machine.
- Stop the machine, shut off the engine, and remove the key before servicing, fueling, or unclogging the machine.

Improperly using or maintaining this machine can result in injury. To reduce the potential for injury, comply with these safety instructions and always pay attention to the safety-alert symbol ⚠, which means Caution, Warning, or Danger—personal safety instruction. Failure to comply with these instructions may result in personal injury or death.

Safety and Instructional Decals

Safety decals and instructions are easily visible to the operator and are located near any area of potential danger. Replace any decal that is damaged or missing.

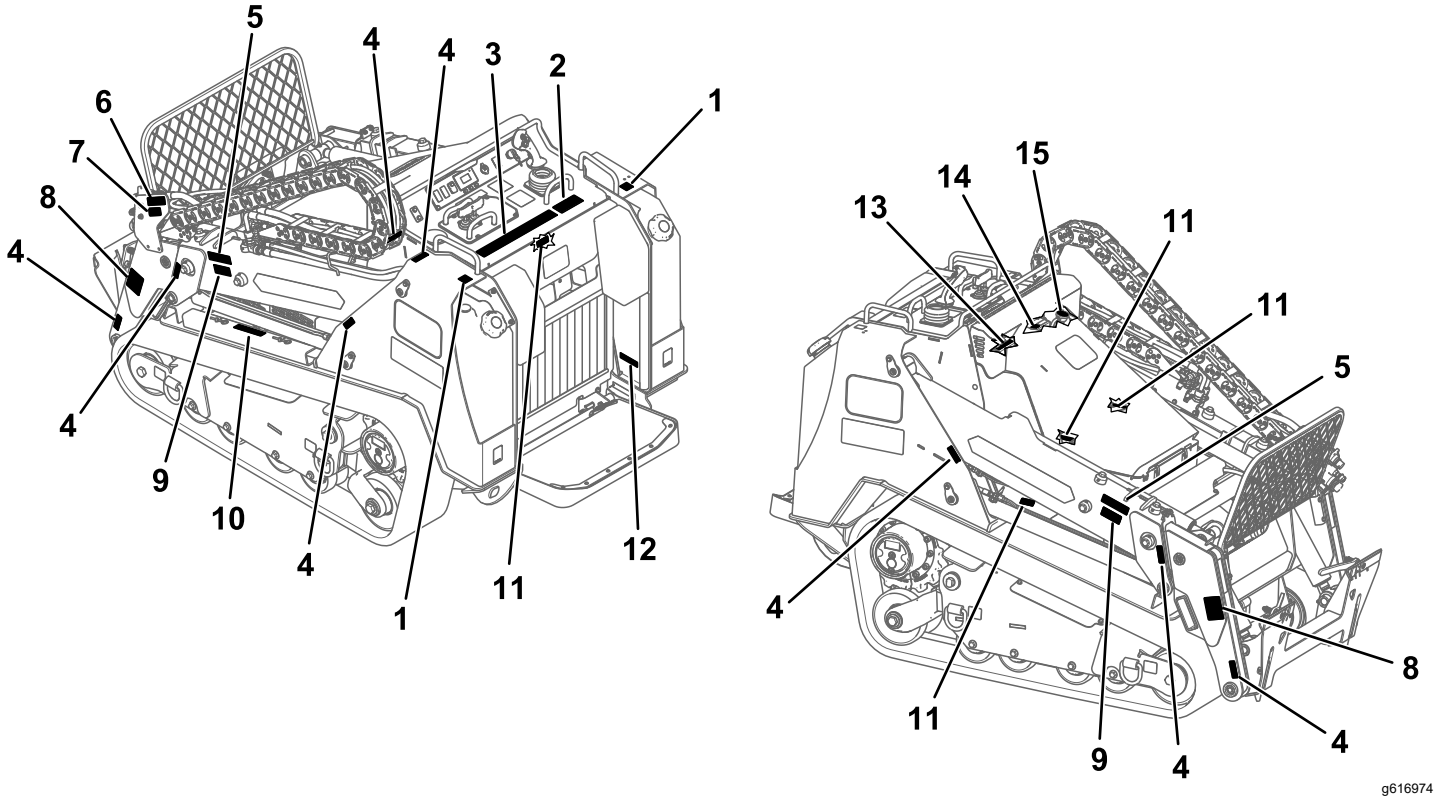

Figure 3
Safety Decal Locations

1. 163-5287	6. 115-4855	11. 115-2047 (inside the machine)
2. 139-1162	7. 139-1173	12. 133-8062
3. 145-0637	8. 139-1164	13. 93-7814 (inside the machine)
4. 120-0625	9. 139-1159	14. 93-6681 (inside the machine)
5. 139-1158	10. 115-4858	15. 106-6755 (inside the machine)

Battery Symbols

Some or all of these symbols are on your battery.

1. Explosion hazard
2. No fire, open flame, or smoking
3. Caustic liquid/chemical burn hazard
4. Wear eye protection.
5. Read the *Operator's Manual*.
6. Keep bystanders away from the battery.
7. Wear eye protection; explosive gases can cause blindness and other injuries.
8. Battery acid can cause blindness or severe burns.
9. Flush eyes immediately with water and get medical help fast.
10. Contains lead; do not discard

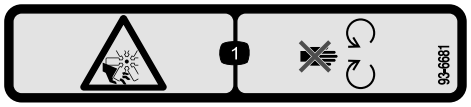

decal93-6681

93-6681

1. Cutting/dismemberment hazard, fan—stay away from moving parts.

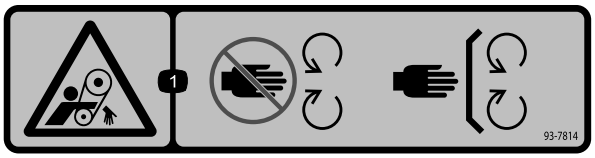

decal93-7814

93-7814

1. Entanglement hazard, belt—stay away from moving parts; keep all guards and shields in place.

decal106-6755

106-6755

1. Engine coolant under pressure.
2. Explosion hazard—read the *Operator's Manual.*
3. Warning—do not touch the hot surface.
4. Warning—read the *Operator's Manual.*

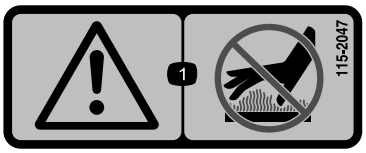

decal115-2047

115-2047

1. Warning—do not touch the hot surface.

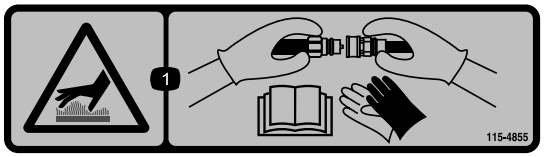

decal115-4855

115-4855

1. Hot surface/burn hazard—wear protective gloves when handling the hydraulic couplers and read the *Operator's Manual* for information on handling hydraulic components.

decal115-4858

115-4858

1. Crushing hazard of hands or feet—install the cylinder lock.

decal115-4865

115-4865

1. Engine coolant
2. Read the *Operator's Manual*.

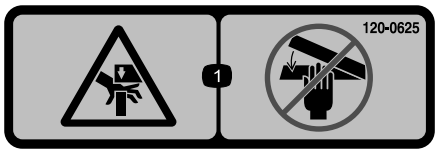

decal120-0625

120-0625

1. Pinch point, hand—keep hands away.

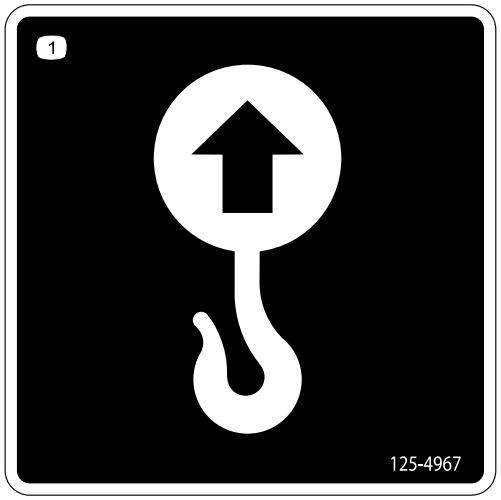

decal125-4967

125-4967

1. Lift point

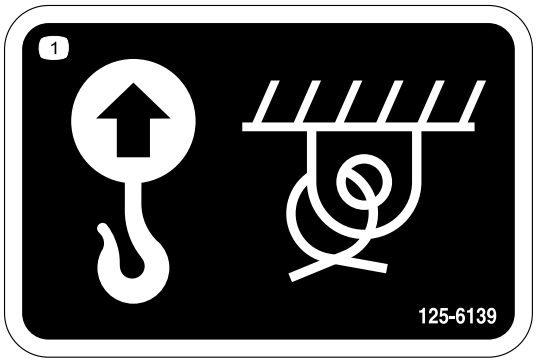

decal125-6139

125-6139

1. Lift point and tie-down point

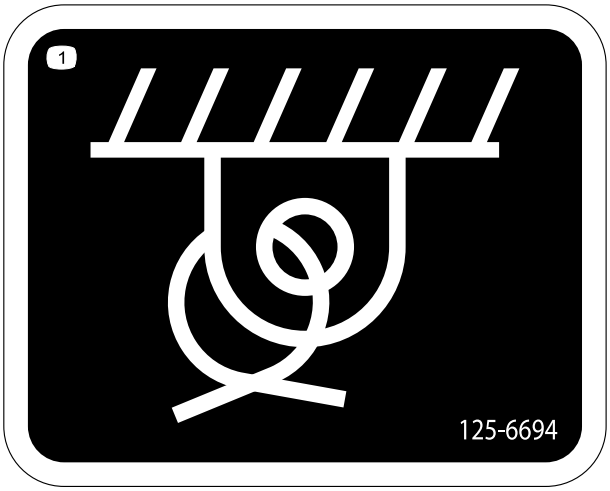

decal125-6694

125–6694

1. Tie down location

---

decal133-8062

133-8062

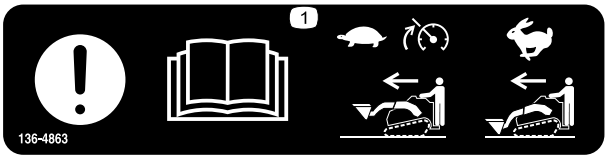

decal136-4863

136-4863

1. Attention—read the *Operator's Manual*; Smart Load will engage and slow the traction speed when the attachment is raised; lower the attachment to drive quickly.

---

decal137-5409

137-5409

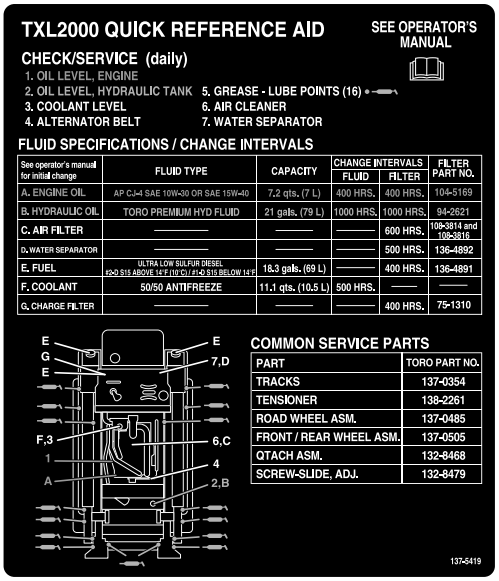

decal137-5419

137-5419

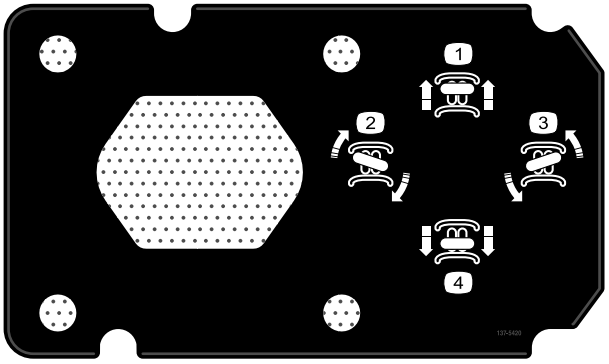

decal137-5420

137-5420

1. Move forward
2. Turn right
3. Turn left
4. Move rearward

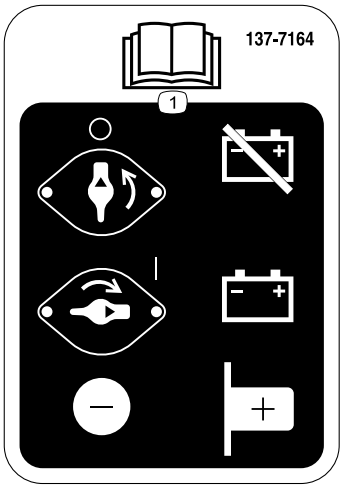

decal137-7164

137-7164

1. Read the *Operator's Manual*—rotate counterclockwise to disconnect the battery; rotate clockwise to connect the battery; the negative post is located below the switch; the positive post is located to the side of the switch.

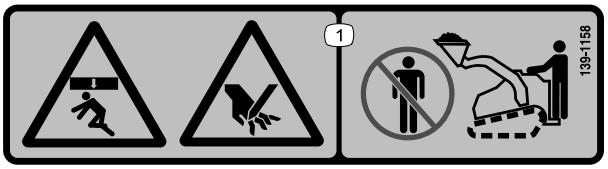

decal139-1158

139-1158

1. Crushing hazard, from above, and pinching hazard—stay away from the bucket and loading arms.

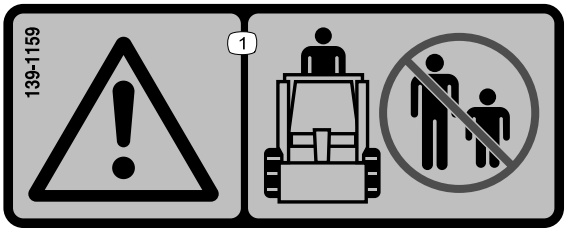

decal139-1159

139-1159

1. Warning—keep bystanders away.

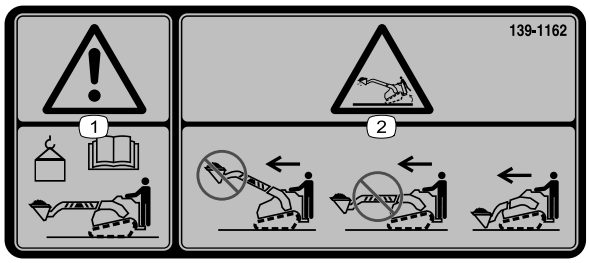

decal139-1162

139-1162

1. Warning—read the *Operator's Manual* for the bucket maximum weight limit.
2. Tipping hazard—do not drive the machine with the load raised or the arms extended; carry the load close to the ground with the arms retracted when driving.

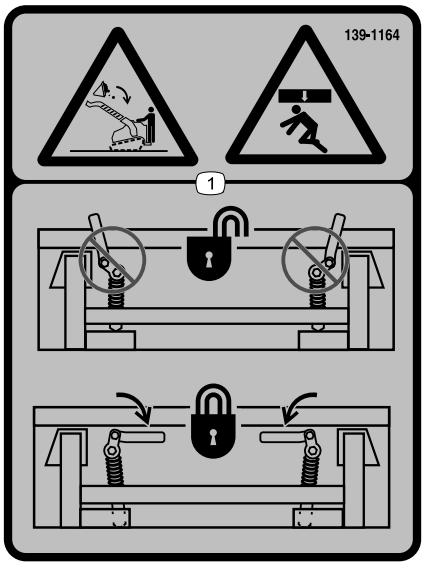

decal139-1164

139-1164

1. Crushing hazard from above, falling load—ensure that the quick-attach levers are locked.

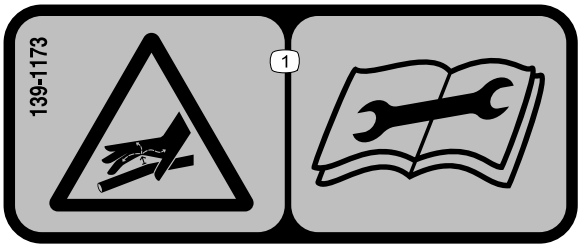

decal139-1173

139-1173

1. High-pressure fluid hazard, injection into the body—read the *Operator's Manual* before performing maintenance.

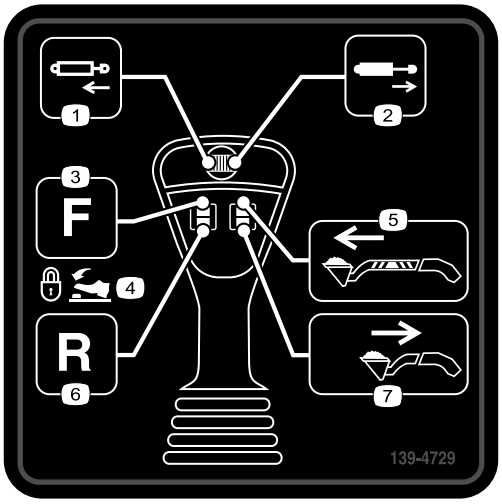

decal139-4729

139-4729

1. Retract the hydraulic cylinder (optional)
2. Extend the hydraulic cylinder (optional)
3. Attachment flow—Forward
4. Press the pedal to lock the flow position.
5. Extend the arms (telescoping model only)
6. Attachment flow—Reverse
7. Retract the arms (telescoping model only)

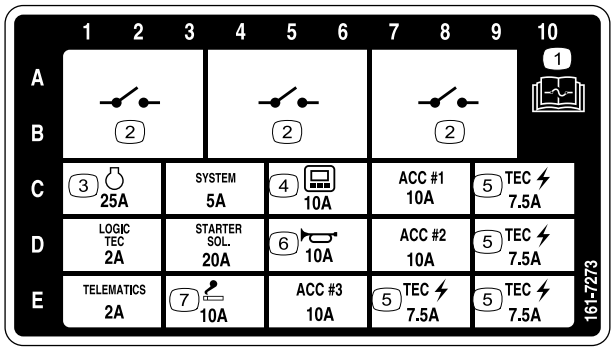

decal161-7273

161-7273

1. Read the *Operator's Manual* for fuse information.
2. Relay
3. Engine
4. Display
5. Electrical power
6. Horn
7. Power point

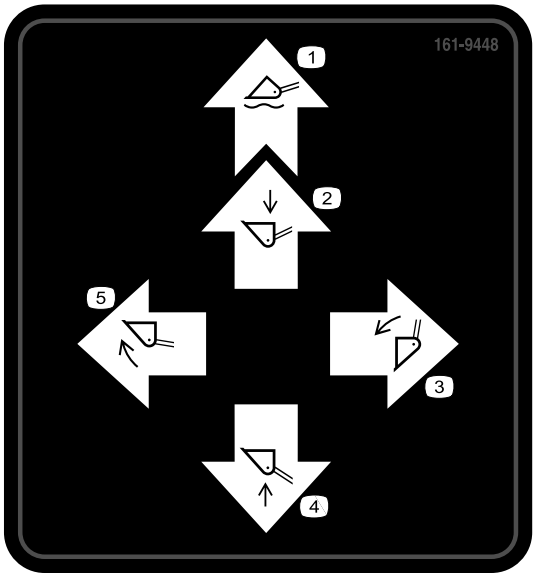

decal161-9448

161-9448

1. Float the attachment.
2. Lower the attachment.
3. Tilt the attachment forward.
4. Raise the attachment.
5. Tilt the attachment rearward.

decal163-5287

163-5287

1. Explosion hazard—shut off the engine; do not expose to fire or open flame.

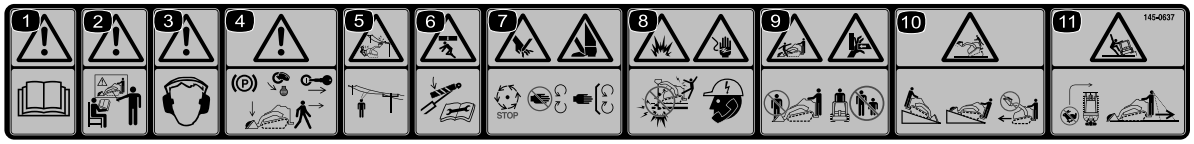

decal145-0637

145-0637

1. Warning—read the *Operator's Manual*.
2. Warning—receive training before operating the machine.
3. Warning—wear hearing protection.
4. Warning—engage the parking brake, lower the attachment to the ground, shut off the engine, and remove the key from the ignition before leaving the machine.
5. Electrocution hazard, power lines—check for power lines in the area before using the machine.
6. Crushing hazard—install the cylinder lock; read the *Operator's Manual* before servicing or performing maintenance.
7. Cutting/severing hazard of hand or foot—wait for all moving parts to stop before servicing; keep away from moving parts; keep all guards and shields in place.
8. Explosion hazard; electrocution hazard—call the local utilities hotline before beginning work in an area.
9. Crushing hazard—keep away from the attachment when operating the machine; keep bystanders away from the machine.
10. Tipping hazard—always move up or down slopes with the attachment lowered; never drive on a slope with the attachment raised; always operate with the heavy end uphill; always carry loads low; never jerk the control levers; use a steady, even motion.
11. Tipping hazard—do not make fast turns; always check behind you before reversing the machine.

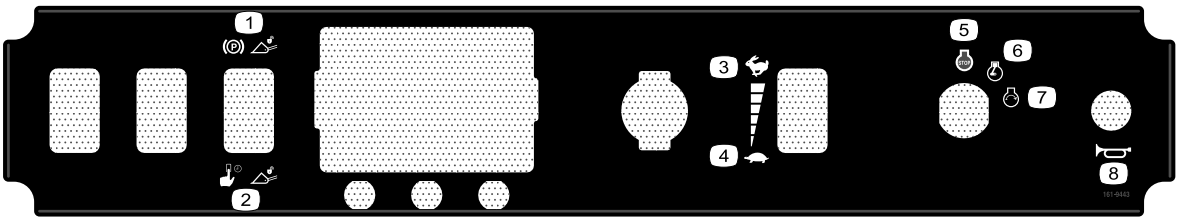

decal161-9443

161-9443

1. Parking brake and loader controls—enable
2. Loader controls—press and continuously hold to enable
3. Fast
4. Slow
5. Engine—stop
6. Engine—run
7. Engine—start
8. Horn

Product Overview

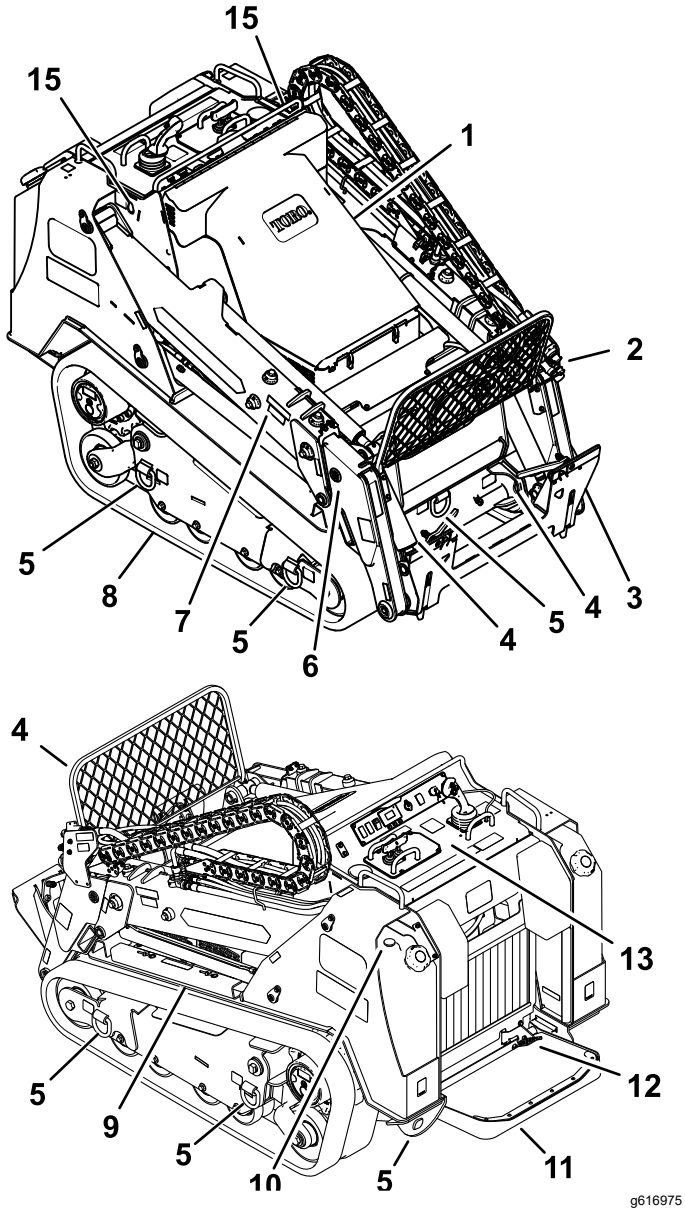

Figure 4

1. Hood
2. Auxiliary hydraulic couplers
3. Mount plate
4. Lift/tie-down point
5. Tie-down loop
6. Lower loader arm
7. Upper loader arm
8. Track
9. Cylinder lock
10. Fuel gauge
11. Operator platform
12. Auxiliary-hydraulics lock pedal
13. Control panel
14. Debris shield
15. Lift point

Controls

Control Panel

Become familiar with all the controls (Figure 5) before you start the engine and operate the traction unit.

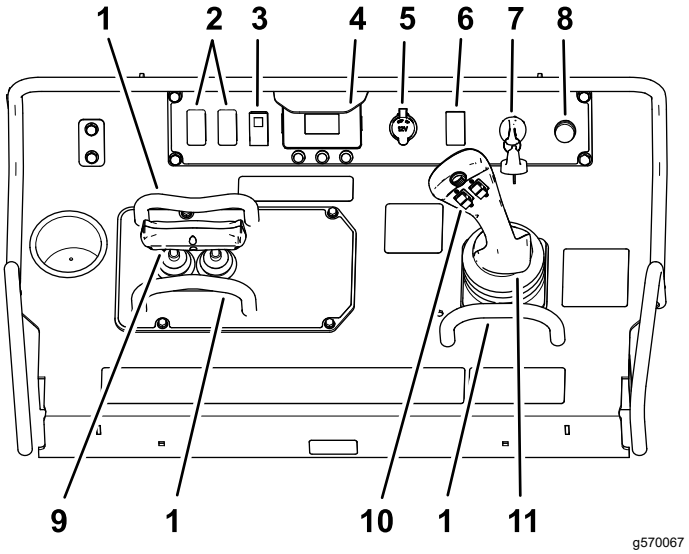

Figure 5

1. Reference bar
2. Plug
3. Parking brake/machine-enable switch
4. InfoCenter
5. Power socket
6. Throttle switch
7. Key switch
8. Horn
9. Traction control
10. Joystick controls
11. Loader arm/attachment-tilt lever

Key Switch

The key switch, used to start and shut off the engine, has 3 positions: OFF, RUN, and START. Refer to Starting the Engine (page 24).

Parking-Brake/Machine-Enable Switch

The traction and loader-arm controls are automatically disabled when starting the machine. The parking brake engages automatically when you shut off the machine.

Press the switch to disengage the parking brake and enable the traction and loader-arm controls; press the switch again to engage the parking brake and disable the controls.

Note: The light on the switch illuminates when the parking brake is engaged.

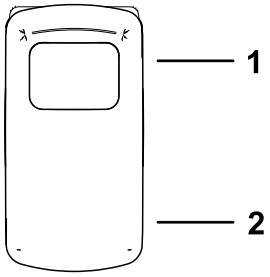

g530256

Figure 6

1. Disengage the parking brake and enable the traction and loader-arm controls.
2. Press and continuously hold to enable the loader-arm controls only.

Throttle Switch

Press the switch forward for 2 or more seconds to set the throttle at HIGH IDLE; press the switch rearward for 2 or more seconds to set the throttle at LOW IDLE; or momentarily press the switch in either direction to increase or decrease the engine speed in 100-rpm increments.

Reference Bar

When driving the traction unit, use the reference bar as a handle and a leverage point for controlling the traction control and the joystick lever. To ensure smooth, controlled operation, do not take your hands off the reference bars while operating the machine.

Traction Control

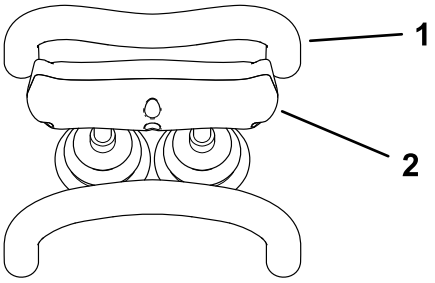

g264835

Figure 7

1. Reference bar
2. Traction control

- To move forward, move the traction control forward (Figure 8).

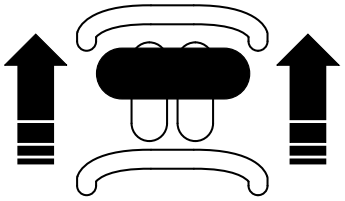

g264830

Figure 8

- To move rearward, move the traction control rearward (Figure 9).

  Important: **When reversing, look behind you for obstructions and keep your hands on the reference bar.**

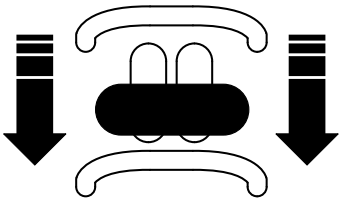

g264831

Figure 9

- To turn right, rotate the traction control clockwise (Figure 10).

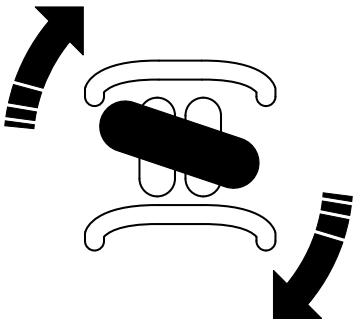

Figure 10

- To turn left, rotate the traction control counterclockwise (Figure 11).

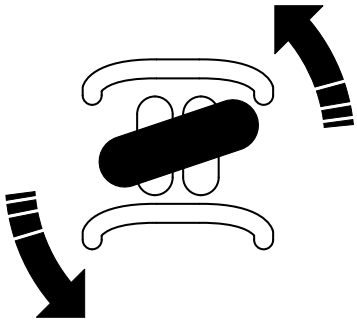

Figure 11

- To stop the machine, release the traction control (Figure 7).

Note: The farther you move the traction control in any direction, the faster the machine moves in that direction.

Loader Arm/Attachment-Tilt Lever

- To tilt the attachment forward, slowly move the lever to the right (Figure 12).
- To tilt the attachment rearward, slowly move the lever to the left (Figure 12).
- To lower the loader arms, slowly move the lever forward (Figure 12).
- To raise the loader arms, slowly move the lever rearward (Figure 12).

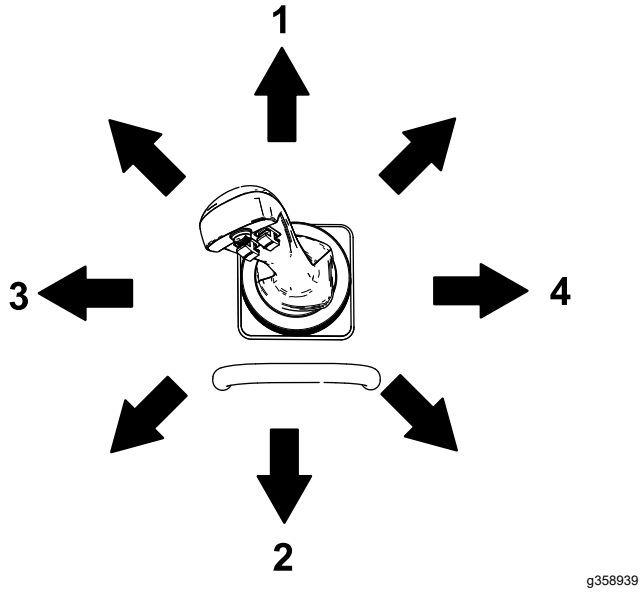

Figure 12

1. Lower the loader arms.
2. Raise the loader arms.
3. Tilt the attachment rearward.
4. Tilt the attachment forward.

By moving the lever to an intermediate position (e.g., forward and left), you can move the loader arms and tilt the attachment at the same time.

Joystick Controls

Primary-Attachment Switch

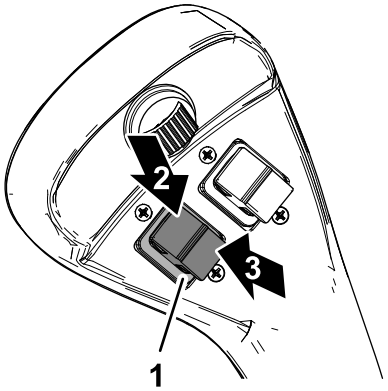

g359406

Figure 13

1. Hydraulic-attachment switch
2. Forward hydraulic-flow direction
3. Reverse hydraulic-flow direction

- Press and hold the hydraulic-attachment switch up to operate a hydraulic attachment in the forward hydraulic-flow direction (Figure 13).
- Release the secondary-attachment switch to stop the attachment.
- Press and hold the hydraulic-attachment switch down to operate a hydraulic attachment in the reverse hydraulic-flow direction.

  Note: The primary-attachment switch is pressure sensitive; the further you press a switch, the faster the hydraulics flow for the attachment.

Loader Arm Extend/Retract Switch

⚠ WARNING

Moving the machine while the loader arms are extended may affect the stability of the machine.

Minimize machine movement while the loader arms are extended.

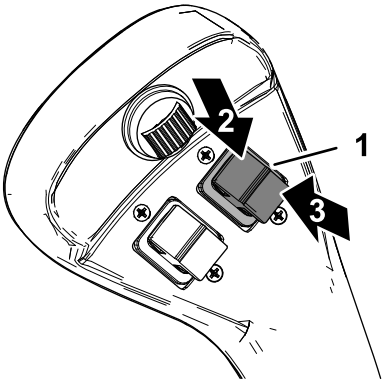

g358952

Figure 14

1. Loader arm extend/retract switch
2. Extend loader arms
3. Retract loader arms

- Press the loader arm extend/retract switch (Figure 14) up to extend the loader arms.
- Release the extend/retract switch to stop the loader arms.
- Press the loader arm extend/retract switch down to retract the loader arms.

Note: The loader arm extend/retract switch is pressure sensitive; the further you press a switch, the faster the loader arms move.

Secondary-Attachment Switch

Use the secondary-attachment switch (Figure 15) to control certain optional attachments.

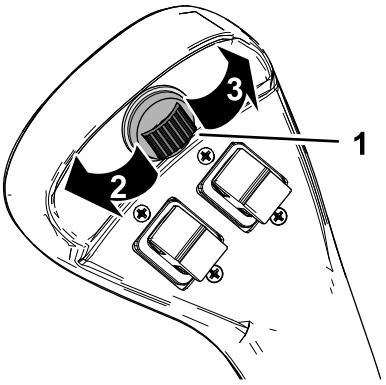

g359407

Figure 15

1. Secondary-attachment switch
2. Extend/forward direction (left-detent position)
3. Retract/reverse direction (right-detent position)

- Push the secondary-attachment switch to the right until it locks into position to run a hydraulic attachment in the forward direction (Figure 15). Use the primary-attachment switch to control the function; refer to Primary-Attachment Switch (page 15).

- Push the secondary-attachment switch to the center position to return to using the primary attachment function.
- Push the secondary-attachment switch to the left until it locks into position to operate a hydraulic attachment in the reverse direction. Use the primary-attachment switch to control the function; refer to Primary-Attachment Switch (page 15).

Auxiliary-Hydraulics Lock Pedal

Press and hold the primary-attachment switch on the joystick for more than 1 second, then use your right foot to press the pedal to continue the full forward or reverse flow of the auxiliary hydraulics and free your hand for other controls.

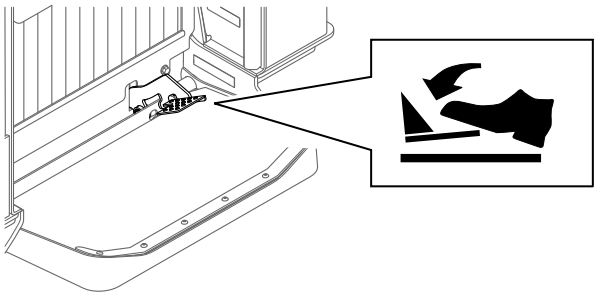

g570078

Figure 16

Fuel Gauge

This gauge measures the amount of fuel in the fuel tank(s).

InfoCenter Display

The InfoCenter LCD display shows information about your machine, such as the operating status, various diagnostics and other information about the machine (Figure 17). There is a splash screen and main information screen of the InfoCenter. You can switch between the splash screen and main information screen at any time by pressing any of the InfoCenter buttons and then selecting the appropriate directional arrow.

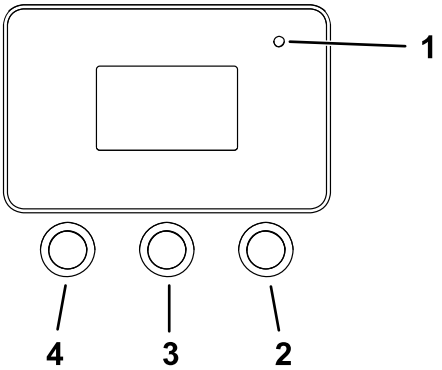

g264015

Figure 17

1. Indicator light
2. Right button
3. Middle button
4. Left button

- Left Button, Menu Access/Back Button—press this button to access the InfoCenter menus. You can use it to exit any menu that you are currently using.
- Middle Button—use this button to scroll down menus.
- Right Button—use this button to open a menu where a right arrow indicates additional content.

Note: The purpose of each button may change depending on what is required at the time. Each button is labeled with an icon displaying its current function.

InfoCenter Icon Description

	Menu access
	Next
	Previous
	Scroll down
	Enter
	Change the next value in the list
	Increase
	Decrease
	Save value
	Exit menu
	Check PIN entry

InfoCenter Icon Description (cont'd.)

	Hour meter
	Adjust digit
	Transport-speed screen access
	Transport speed—adjust the traction speed but maintain engine speed; refer to Setting the Maximum Transport Speed (page 18).
	Engine-coolant temperature
	Engine speed
	Battery voltage
	Smart Load is active; refer to Understanding the Smart Load System (page 27).
	Indicates when scheduled service should be performed
SMART POWER	Smart Power is active; refer to Understanding Smart Power® Traction (page 27).

Using the Menus

To access the InfoCenter menu system, press the menu access button i while at the main screen. This will bring you to the main menu. Refer to the following tables for a synopsis of the options available from the menus:

Main Menu	
Menu Item	**Description**
Faults	The Faults menu contains a list of the recent machine faults. Refer to the Service Manual or your Authorized Service Dealer for more information on the Faults menu and the information contained there.
Service	The Service menu contains information on the machine such as hours of use and other similar numbers.
Diagnostics	The Diagnostics menu displays the state of each machine switch, sensor and control output. You can use this to troubleshoot certain issues as it will quickly tell you which machine controls are on and which are off.
Settings	The Settings menu allows you to customize and modify configuration variables on the InfoCenter display.
About	The About menu lists the model number, serial number, and software version of your machine.

Service	
Menu Item	**Description**
Hours	Lists the total number of hours that the machine, engine, auxiliary hydraulics, and SmartPower have been on, as well as the number of hours for engine service and hydraulic service.
Counts	Lists the number of starts that the machine has experienced, the number of times the machine has warned that the engine temperature is too high, and the number of times the engine has shut off due to high temperatures.

Diagnostics	
Menu Item	**Description**
Traction	Indicates the inputs and outputs for driving the machine.
Auxiliary	Indicates the inputs and outputs for engaging auxiliary hydraulics.
Engine	Indicates the inputs and outputs for starting the engine.
Boom	Indicates the inputs and outputs for extending and retracting the telescoping arms.

Settings	
Menu Item	**Description**
Units	Controls the units used on the InfoCenter; the menu choices are Imperial or Metric.
Language	Controls the language used on the InfoCenter.
Brightness	Controls the brightness of the LCD display.
Contrast	Controls the contrast of the LCD display.
Smart Power	Smart Power prevents bogging down in heavy conditions by automatically controlling the machine speed and optimizing performance.
Protected Menus	Grants access to protected menus.
Protect Settings	Changes whether a pin is required in Protected Menus.
Transport Speed	Controls the maximum speed while in transport.

About	
Menu Item	**Description**
Model	Lists the model number of the machine
Serial	Lists the serial number of the machine
Software	Lists the system software revision of the machine.
Display	Lists the display software revision of the InfoCenter.

Setting the Maximum Transport Speed

For applications requiring a lower transport speed, you can adjust the maximum transport speed without affecting the engine speed.

1. From the SPLASH SCREEN or HOME SCREEN, press the transport-speed screen access button (middle button) twice.

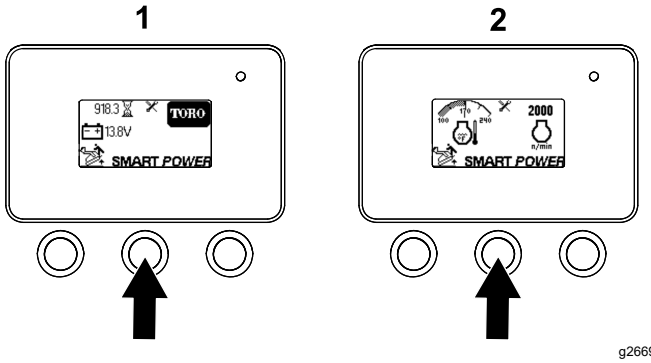

Figure 18

1. Splash screen
2. Home screen

2. In the MAX SPEED SCREEN, adjust the maximum speed using the middle and right buttons.

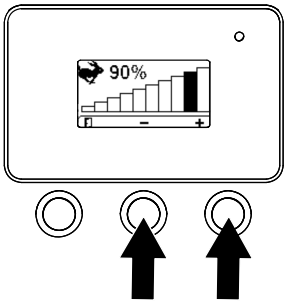

Figure 19

Accessing Protected Menus

The TRANSPORT SPEED is adjustable within the SETTINGS MENU of the InfoCenter. These settings are in the Protected Menu.

Note: The factory default PIN code for you machine is either 0000 or 1234.

If you changed the PIN code and forgot the code, contact your Authorized Service Dealer for assistance.

1. From the MAIN MENU, use the center button to scroll down to the SETTINGS MENU and press the right button (Figure 20).

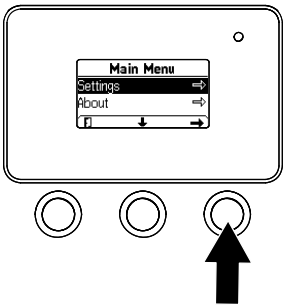

g264775

Figure 20

2. In the SETTINGS MENU, use the center button to scroll down to the PROTECTED MENU and press the right button (Figure 21A).

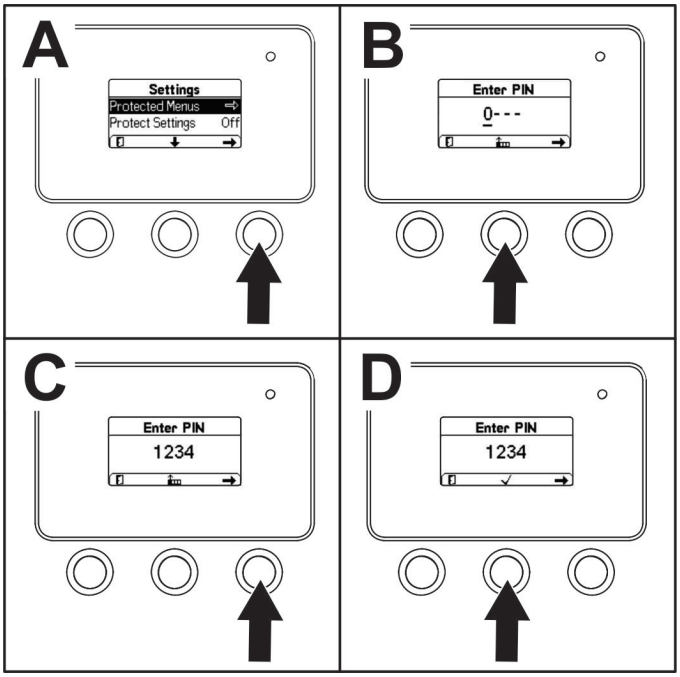

g264249

Figure 21

3. To enter the PIN code, press the center button until the correct first digit appears, then press the right button to move on to the next digit (Figure 21B and Figure 21C). Repeat this step until the last digit is entered and press the right button once more.
4. Press the middle button to enter the PIN code (Figure 21D).

   Note: If the InfoCenter accepts the PIN code and the protected menu is unlocked, the word "PIN" displays in the upper right corner of the screen.

You can view and change the settings in the PROTECTED MENU. Once you access the PROTECTED MENU, scroll down to PROTECT SETTINGS option. Use the right button to change the setting. Setting the Protect Settings to OFF allows you to view and change the settings in the PROTECTED MENU without entering the PIN code. Setting the Protect Settings to ON hides the protected options and requires you to enter the PIN code to change the setting in the PROTECTED MENU.

Setting the Maximum Allowed Transport Speed

1. In the SETTINGS MENU, scroll down to TRANSPORT SPEED and press the right button.
2. Use the right button to increase the maximum transport speed (30% to 100%).
3. Use the center button to decrease the maximum transport speed (30% to 100%).
4. Press the left button to exit.
5. When finished with the PROTECTED MENU, press the left button to exit to the MAIN MENU, then press the left button to exit to the RUN MENU.

Specifications

Note: Specifications and design are subject to change without notice.

Model 22530

Width	137 cm (54 inches)
Length	251 cm (99 inches)
Height	173 cm (68 inches)
Weight	3034 kg (6,690 lb)
Operating capacity (35% of tipping capacity[1]) • Arms retracted • Arms extended	 907 kg (2,000 lb) 417 kg (920 lb)
Tipping capacity[1] • Arms retracted • Arms extended	 2592 kg (5,715 lb) 1188 kg (2,620 lb)
Wheelbase	137 cm (54 inches)
Dump height (with standard bucket) • Arms retracted • Arms extended	 163 cm (64 inches) 226 cm (89 inches)
Reach—fully raised (with standard bucket) • Arms retracted • Arms extended	 66 cm (26 inches) 115 cm (45 inches)
Height to hinge pin (with standard bucket in highest position) • Arms retracted • Arms extended	 251 cm (99 inches) 312 cm (123 inches)

1. The operating capacity is calculated as 35% of the tipping capacity with a standard bucket and 75 kg (165 lb) operator, per ISO 14397-1. Other attachments will have different operating capacities; refer to the Operator's Manual or load capacity decal for the attachment.

Model 22531

Width	137 cm (54 inches)
Length	251 cm (99 inches)
Height	173 cm (68 inches)
Weight	2828 kg (6,235 lb)
Operating capacity (35% of tipping capacity[1])	907 kg (2,000 lb)
Tipping capacity[1]	2592 kg (5,715 lb)
Wheelbase	137 cm (54 inches)
Dump height (with standard bucket)	163 cm (64 inches)
Reach—fully raised (with standard bucket)	66 cm (26 inches)
Height to hinge pin (with standard bucket in highest position)	251 cm (99 inches)

1. The operating capacity is calculated as 35% of the tipping capacity with a standard bucket and 75 kg (165 lb) operator, per ISO 14397-1. Other attachments will have different operating capacities; refer to the Operator's Manual or load capacity decal for the attachment.

Attachments/Accessories

A selection of Toro-manufactured attachments and accessories is available for use with the machine to enhance and expand its capabilities. Contact your Authorized Service Dealer or authorized Toro distributor or go to www.Toro.com for a list of all Toro-manufactured attachments and accessories.

To ensure optimum performance, use genuine Toro replacement parts and accessories. Toro accepts no liability for machine damage or personal injury that results from the use of other manufacturer attachments. The user accepts the burden of these risks.

Operation

Note: Determine the left and right sides of the machine from the normal operating position.

Before Operation

Before Operation Safety

General Safety

- Never allow children or untrained people to operate or service the machine. Local regulations may restrict the age or require certified training of the operator. The owner is responsible for training all operators and mechanics.
- Become familiar with the safe operation of the equipment, operator controls, and safety decals.
- Always engage the parking brake (if equipped), shut off the engine, remove the key, wait for all moving parts to stop, and allow the machine to cool before adjusting, servicing, cleaning, or storing the machine.
- Know how to stop the machine and shut off the engine quickly.
- Check that the safety switches, and shields are attached and functioning properly. Do not operate the machine unless they are functioning properly.
- Locate the pinch-point areas marked on the machine and attachments; keep your hands and feet away from these areas.
- Before operating the machine with an attachment, ensure that the attachment is properly installed. Read all the attachment manuals.
- Evaluate the terrain to determine what accessories and attachments you need to properly and safely perform the job.
- Have the property or work area marked for buried lines and other objects, and do not dig in marked areas; note the location of unmarked objects and structures, such as underground storage tanks, wells, and septic systems.
- Inspect the area where you will use the equipment for uneven surfaces or hidden hazards.
- Ensure that the area is clear of bystanders before operating the machine. Stop the machine if anyone enters the area.

Fuel Safety

- Use extreme care when handling fuel. It is flammable and its vapors are explosive.
- Extinguish all cigarettes, cigars, pipes, and other sources of ignition.
- Use only an approved fuel container.
- Do not remove the fuel cap or fill the fuel tank while the engine is running or hot.
- Do not add or drain fuel in an enclosed space.
- Do not store the machine or fuel container where there is an open flame, spark, or pilot light, such as on a water heater or other appliance.
- If you spill fuel, do not attempt to start the engine; avoid creating any source of ignition until the fuel vapors have dissipated.
- To prevent a static charge from igniting the fuel, remove the machine from the truck or trailer and refuel it on the ground, away from all vehicles. If this is not possible, place a portable fuel container on the ground, away from all vehicles, and fill it; then refuel the machine from the fuel container rather than from a fuel-dispenser nozzle.
- Keep the fuel-dispenser nozzle in contact with the rim of the fuel tank or container opening at all times until fueling is complete. Do not use a nozzle lock-open device.

Adding Fuel

Recommended Fuel

Use only clean, fresh diesel fuel or biodiesel fuels with ultra low (<15 ppm) sulfur content. The minimum cetane rating should be 45. A cetane rating greater than 50 is preferred, especially at temperatures below -20°C (-4°F) or at elevations above 1500 m (5000 ft). Purchase fuel in quantities that you can use within 180 days to ensure fuel freshness.

Using non-ultra low sulfur fuel will damage the engine emissions system.

Use summer-grade diesel fuel (No. 2-D or No. 2-D S15) at temperatures above -10°C (14°F) and winter grade (No. 1-D or No. 1-D S15) below that temperature. Using winter-grade fuel at lower temperatures provides lower flash point and cold flow characteristics, which eases starting and reduces fuel filter plugging.

Using summer-grade fuel above -10°C (14°F) contributes toward longer fuel pump life and increased power compared to winter-grade fuel.

Important: **Do not use kerosene or gasoline instead of diesel fuel. Failure to observe this caution will damage the engine.**

Biodiesel Ready

This machine can also use a biodiesel blended fuel of up to B5 (5% biodiesel, 95% petrodiesel). The

petrodiesel portion should be low or ultra low sulfur. Observe the following precautions:

- The biodiesel portion of the fuel must meet specification ASTM D6751 or EN14214.
- The blended fuel composition should meet ASTM D975 or EN590.
- Painted surfaces may be damaged by biodiesel blends.
- Use B5 (biodiesel content of 5%) or lesser blends in cold weather.
- Monitor seals, hoses, gaskets in contact with fuel as they may degrade over time.
- Fuel filter plugging may occur for a time after converting to biodiesel blends.
- Contact your distributor for more information on biodiesel.

Filling the Fuel Tanks

Fuel tank capacity: 35 L (9.3 US gallons) per tank

1. Park the machine on a level surface, engage the parking brake, and lower the loader arms.
2. Shut off the engine and remove the key.
3. Remove the fuel cap.
4. Fill the tank with fuel up to the filler neck.
5. Install the cap.

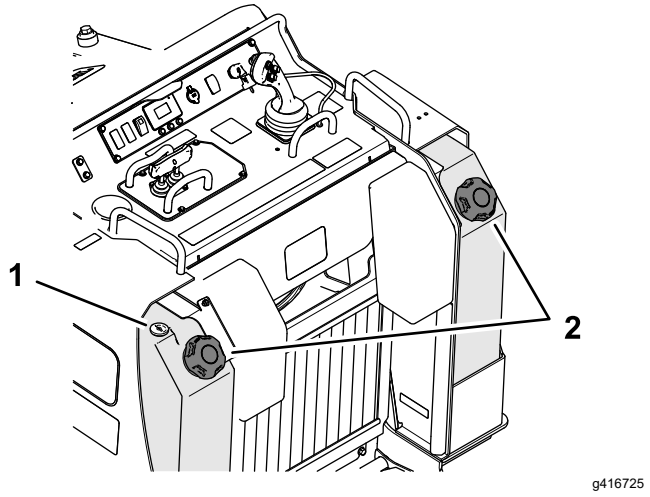

Figure 22

1. Fuel gauge
2. Fuel tank caps

Performing Daily Maintenance

Before starting the machine each day, perform the Each Use/Daily procedures listed in the Maintenance (page 32).

Important: **Check the hydraulic-fluid level and bleed the fuel system before starting the engine for the first time; refer to Checking the Hydraulic-Fluid Level (page 55) and Bleeding the Fuel System (page 43).**

During Operation

During Operation Safety

General Safety

- Do not exceed the rated operating capacity, as the machine may become unstable, which may result in loss of control. The operating capacity is reduced if you extend the loader arms to the point where you can see the striped decal inside the arms.
- Do not transport an attachment/load with the arms raised or extended; always transport the attachments/load close to the ground, with the loader arms retracted.
- Attachments can change the stability and the operating characteristics of the machine.
- For machines with a platform:
  - Lower the loader arms before stepping off the platform.
  - Do not try to stabilize the machine by putting your foot on the ground. If you lose control of the machine, step off the platform and away from the machine.
  - Do not place your feet under the platform.
  - Do not move the machine unless you are standing with both feet on the platform and your hands are holding onto the reference bars or the loader control.
- Use your full attention while operating the machine. Do not engage in any activity that causes distractions; otherwise, injury or property damage may occur.
- Look behind and down before backing up to ensure that the path is clear.
- Never jerk the controls; use a steady motion.
- The owner/user can prevent and is responsible for accidents that may cause personal injury or property damage.
- Wear appropriate clothing including eye protection, long pants, substantial slip-resistant footwear, and hearing protection; also wear a respirator or dust mask in dusty conditions. Tie back long hair and do not wear loose clothing or loose jewelry.
- Do not operate the machine when you are tired, ill, or under the influence of alcohol or drugs.
- Never carry passengers and keep pets and bystanders away from the machine.
- Operate the machine only in good light, keeping away from holes and hidden hazards.
- Ensure that all the drives are in neutral before starting the engine. Start the engine only from the operator's position on the platform.
- Use care when approaching blind corners, shrubs, trees, or other objects that may obscure vision.
- Slow down and use caution when making turns and crossing roads and sidewalks. Watch for traffic.
- Stop the attachment when you are not working.
- Stop the machine, shut off the engine, remove the key, and inspect the machine if you strike an object. Make any necessary repairs before resuming operation.
- Never run an engine in an enclosed area.
- Never leave a running machine unattended.
- Before leaving the operating position, do the following:
  - Park the machine on a level surface.
  - Lower the loader arms and disengage the auxiliary hydraulics.
  - Engage the parking brake.
  - Shut off the engine and remove the key.
- Do not operate the machine when there is the risk of lightning.
- Operate the machine only in areas where there is sufficient clearance for you to safely maneuver. Be aware of obstacles in close proximity to you. Failure to maintain adequate distance from trees, walls, and other barriers may result in injury as the machine backs up during operation if you are not attentive to the surroundings.
- Check for overhead clearance (i.e., electrical wires, branches, and doorways) before driving under any objects and do not contact them.
- Do not overfill the attachment and always keep the load level when raising the loader arms. Items in the attachment could fall and cause injury.

Slope Safety

- **Operate the machine up and down slopes with the heavy end of the machine uphill.** Weight distribution changes with attachments. An empty load-bearing attachment makes the rear of the machine the heavy end, and a full load-bearing attachment makes the front of the machine the heavy end. Most other attachments make the front of machine the heavy end.
- Raising or extending the loader arms on a slope affects the stability of the machine. Keep the loader arms in the lowered and retracted position when on slopes.

- Slopes are a major factor related to loss of control and tip-over accidents, which can result in severe injury or death. **Operating the machine on any slope or uneven terrain requires extra caution.**
- Establish your own procedures and rules for operating on slopes. These procedures must include surveying the site to determine which slopes are safe for machine operation. Always use common sense and good judgment when performing this survey.
- Slow down and use extra care on hillsides. Ground conditions can affect the stability of the machine.
- Avoid starting or stopping on a slope. If the machine loses traction, proceed slowly, straight down the slope.
- Avoid turning on slopes. If you must turn, turn slowly and keep the heavy end of the machine uphill.
- Keep all movements on slopes slow and gradual. Do not make sudden changes in speed or direction.
- If you feel uneasy operating the machine on a slope, do not do it.
- Watch for holes, ruts, or bumps, as uneven terrain could overturn the machine. Tall grass can hide obstacles.
- Use caution when operating on wet surfaces. Reduced traction could cause sliding.
- Evaluate the area to ensure that the ground is stable enough to support the machine.
- Use caution when operating the machine near the following:
  - Drop-offs
  - Ditches
  - Embankments
  - Bodies of water

  The machine could suddenly roll over if a track goes over the edge or the edge caves in. Maintain a safe distance between the machine and any hazard.
- Do not remove or add attachments on a slope.
- Do not park the machine on a hillside or slope.

Utility Line Safety

- If you strike a utility line, do the following:
  - Shut off the machine and remove the key.
  - Remove all individuals from the work area.
  - Immediately contact the proper emergency and utility authorities to secure the area.
  - If you damage a fiber-optic cable, do not look into the exposed light.
- Do not leave the operator's platform if the machine is charged with electricity. You will be safe as long as you do not leave the platform.
  - Touching any part of the machine may ground you.
  - Do not allow another individual to touch or approach the machine when charged.
  - Always assume the machine is charged if you strike an electrical or communication line. Do not attempt to leave the machine.
- Leaking gas is both flammable and explosive and may cause serious injury or death. Do not smoke while operating the machine.

Starting the Engine

1. Ensure that the battery-disconnect switch is in the ON position; refer to Using the Battery-Disconnect Switch (page 43).
2. Ensure that the traction-control is in the NEUTRAL position.
3. Insert the key into the key switch and turn it to the ON position.

   Note: In cold weather, wait for the glow plugs to heat the engine before starting the machine.
4. Turn the key to the START position. When the engines starts, release the key.

   Important: **Do not engage the starter for more than 10 seconds at a time. If the engine fails to start, wait 30 seconds for the starter to cool down between attempts. Failure to follow these instructions could burn out the starter motor.**

   Important: **Running the engine at high speeds when the hydraulic system is cold (i.e., when the air temperature is at or below freezing) could damage the hydraulic system. When starting the engine in cold conditions, allow it to run at mid-throttle for 2 to 5 minutes before increasing it to high throttle.**

   Note: If the outdoor temperature is below freezing, store the machine in a garage to keep it warmer and to aid in starting.

Driving the Machine

Use the traction controls to move the machine. The farther you move the traction controls in any direction, the faster the machine moves in that direction. Release the traction controls to stop the machine.

The throttle control regulates the engine speed as measured in rpm (revolutions per minute). Run the engine at high throttle for best performance. You can, however, use the transport speed control in the InfoCenter to operate the machine at lower speeds and retain full engine speed; refer to Setting the Maximum Transport Speed (page 18).

Shutting Off the Engine

1. Park the machine on a level surface and lower the loader arms.
2. Disengage the auxiliary hydraulics.
3. Set the throttle to low idle.
4. If the engine has been working hard or is hot, let it idle for 5 minutes before turning the key switch to the OFF position.

   Note: This helps to cool the engine before you shut it off. In an emergency, you can shut off the engine immediately.
5. Turn the key switch to the OFF position and remove the key.

⚠ CAUTION

A child or untrained bystander could attempt to operate the traction unit and be injured.

Remove the key from the key switch when leaving the traction unit, even if just for a few seconds.

Using Attachments

This is a multipurpose machine intended for use in various activities. It is designed to operate safely with a variety of Toro-manufactured attachments, each of which performs a specialized function. Toro accepts no liability for machine damage or personal injury that results from the use of other manufacturers attachments. The user accepts the burden of these risks.

Read the attachment *Operator's Manual* before you use the attachment.

Important: **Attachments can change the stability and the operating characteristics of the machine.**

Installing an Attachment

Important: **Before installing the attachment, ensure that the mount plates are free of any dirt or debris and that the pins move freely. If the pins do not move freely, grease them.**

1. Position the attachment on a level surface with enough space behind it to accommodate the machine.
2. Rotate the quick-attach levers outward to raise the quick-attach pins.

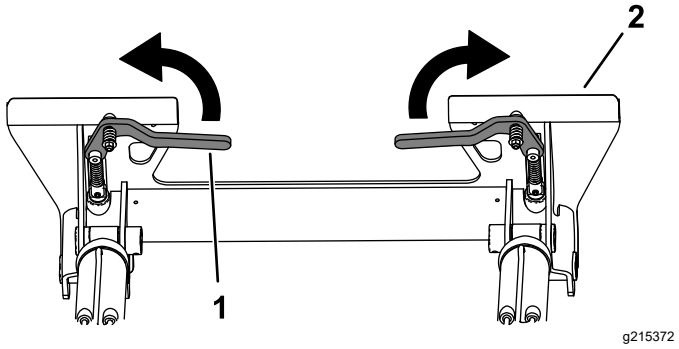

Figure 23

1. Quick-attach lever
2. Attachment mount plate

3. Start the engine.
4. Tilt the attachment mount plate forward.
5. Position the mount plate into the upper lip of the attachment receiver plate.

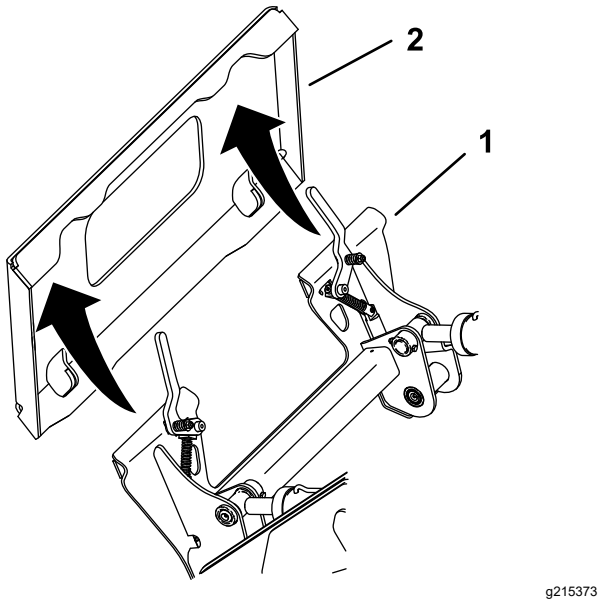

Figure 24

1. Mount plate
2. Receiver plate

6. Raise the loader arms while tilting back the mount plate at the same time.

Important: **Raise the attachment enough to clear the ground and tilt the mount plate all the way back.**

7. Shut off the engine and remove the key.
8. Rotate the quick-attach levers inward, ensuring that the quick-attach pins are fully seated in the mount plate.

⚠ WARNING

If you do not fully seat the quick-attach pins through the attachment mount plate, the attachment could fall off the machine, crushing you or bystanders.

Ensure that the quick-attach pins are fully seated in the attachment mount plate.

Connecting the Hydraulic Hoses

⚠ WARNING

Hydraulic fluid escaping under pressure can penetrate skin and cause injury. Fluid injected into the skin must be surgically removed within a few hours by a doctor familiar with this form of injury; otherwise, gangrene may result.

- **Keep your body and hands away from pinhole leaks or nozzles that eject high-pressure hydraulic fluid.**
- **Use cardboard or paper to find hydraulic leaks; never use your hands.**

⚠ WARNING

Hydraulic couplers, hydraulic lines/valves, and hydraulic fluid may be hot. If you contact hot components, you may be burned.

- **Wear gloves when operating the hydraulic couplers.**
- **Allow the machine to cool before touching hydraulic components.**
- **Do not touch hydraulic fluid spills.**

If the attachment requires hydraulics for operation, connect the hydraulic hoses as follows:

1. Shut off the engine and remove the key.
2. Remove the protective covers from the hydraulic connectors on the machine.
3. Ensure that all foreign matter is cleaned from the hydraulic connectors.
4. Push the attachment female connector onto the male connector on the machine.
5. Push the attachment male connector into the female connector on the machine.
6. Confirm that the connection is secure by pulling on the hoses.

Removing an Attachment

1. Park the machine on a level surface.
2. Lower the attachment to the ground.
3. Shut off the engine and remove the key.
4. Raise the quick-attach pins by rotating the levers outward.
5. If the attachment uses hydraulics, slide the collars back on the hydraulic couplers and disconnect them.

   Important: **Connect the attachment hoses together to prevent hydraulic system contamination during storage.**

   ⚠ CAUTION

   Hydraulic couplers, hydraulic lines/valves, and hydraulic fluid may be hot. If you contact hot components, you may be burned.

   - **Wear gloves when operating the hydraulic couplers.**
   - **Allow the machine to cool before touching hydraulic components.**
   - **Do not touch hydraulic fluid spills.**

6. Install the protective covers onto the hydraulic couplers on the machine.
7. Start the engine, tilt the mount plate forward, and back the machine away from the attachment.

Understanding Smart Power® Traction

The Smart Power® function senses the load on the engine and adjusts the maximum traction speed while maintaining the engine speed so that you can optimize performance in powered attachments. For example, when using the trencher attachment, Smart Power reduces the traction speed so that you have maximum, continuous power while digging.

Engage the attachment hydraulics and slowly move the traction control to activate Smart Power.

Note: To use this function, ensure that Smart Power is set to ON in the Settings section of the InfoCenter; refer to InfoCenter Display (page 16). For some applications, such as digging and grading, the machine may perform better with Smart Power set to OFF.

Understanding the Smart Load System

When you raise the loader arms above a certain level (slightly above parallel to the ground), the Smart Load system will automatically reduce the maximum traction speed to 50%. The engine speed will remain the same.

Note: If the maximum traction speed is already set 50% or below in the InfoCenter, the traction speed will not automatically change.

For telescoping machines:

The Smart Load system also measures the hydraulic pressure in the loader arm cylinders to determine the maximum reach.

When you extend the loader arms to the maximum reach for the arm height and load weight, the InfoCenter will display the Smart Load icon (Figure 25) and flash the indicator light, an alarm will beep, and the arms will stop extending.

To extend the loader arms further, lighten the load.

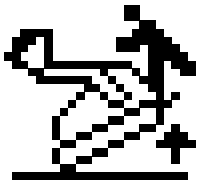

g270732

Figure 25

After Operation

After Operation Safety

General Safety

- Engage the parking brake (if equipped), lower the loader arms, shut off the engine, remove the key, wait for all movement to stop, and allow the machine to cool before adjusting, cleaning, storing, or servicing it.
- Clean debris from the attachments, drives, mufflers, and engine to help prevent fires. Clean up oil or fuel spills.
- Keep all parts in good working condition and all hardware tightened.
- Do not touch parts that may be hot from operation. Allow them to cool before attempting to maintain, adjust, or service the machine.
- Use care when loading or unloading the machine into a trailer or truck.

Retrieving a Stuck Machine

If the machine becomes stuck (e.g., in muddy conditions), pull the machine back into a stable position using either both front lift points or both rear tie-down points simultaneously.

Important: **Do not use the front tie-down loop to pull the machine.**

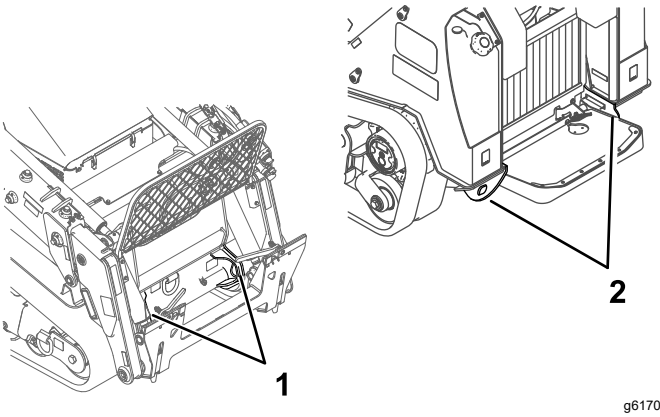

g617006

Figure 26

1. Front lift/tie-down points
2. Rear tie-down points

Moving a Non-Functioning Machine

In an emergency, the machine can be moved forward by actuating the bypass valve in the hydraulic pump and pushing or towing the machine.

Important: **Do not tow or pull the machine without bypassing the parking brake or you will damage the hydraulic system.**

1. Shut off the engine and remove the key.
2. Remove the bottom plate; refer to Removing the Bottom Plate (page 36)
3. For each drive motor, remove the plug and install a screw (M8–1.25 x 40 mm) and washer (M8 x 16 mm) in its place (Figure 27). Hand-tighten the hardware.

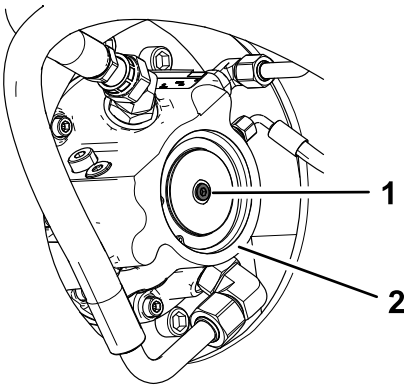

g263991

Figure 27

1. Remove this plug and install a screw and washer.
2. Track drive motor

4. Use hand tools to rotate the hardware clockwise until the brake is released or you cannot rotate the screw (Figure 25).
5. On the left side of the hydraulic pump, rotate the 4 bypass valves 3 full turns counter-clockwise to open and allow the oil to bypass internally.

   Note: Do not open more than 3 turns. Because fluid is bypassed, you can slowly move the machine without damaging the transmission.

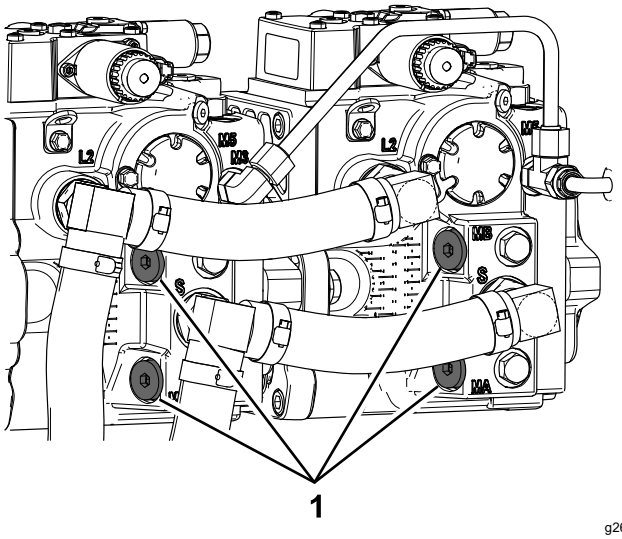

g267326

Figure 28

1. Bypass valve

6. Tow the machine as required using the tie-down locations (see Figure 31).

   Important: **Do not push or tow the machine faster than 3 to 4.8 km/h (2 to 3 mph) for longer than 3 minutes, because you may damage the transmission. The bypass valves must be open whenever you push or tow the machine.**
7. Close the bypass valves and torque them to 70 N·m (52 ft-lb).
8. Remove the screw and install the plug into each track drive motor and torque to 8 to 12 N·m (71 to 103 in-lb) before operating the machine.
9. Replace any fluid lost during this procedure; refer to Replacing the Drive-Motor Planetary Gear Oil (page 48).

Hauling the Machine

Use a heavy-duty trailer or truck to haul the machine. Use a full-width ramp. Ensure that the trailer or truck has all the necessary brakes, lighting, and marking as required by law. Please carefully read all the safety instructions. Knowing this information could help you or bystanders avoid injury. Refer to your local ordinances for trailer and tie-down requirements.

⚠ WARNING

Driving on the street or roadway without turn signals, lights, reflective markings, or a slow-moving-vehicle emblem is dangerous and can lead to accidents causing personal injury.

Do not drive the machine on a public street or roadway.

Selecting a Trailer

⚠ WARNING

Loading or unloading a machine onto a trailer or truck increases the possibility of tip-over and could cause serious injury or death (Figure 29).

- **Use only full-width ramps.**
- **Ensure that the length of ramp is at least 4 times as long as the height of the trailer or truck bed to the ground. This ensures that ramp angle does not exceed 15 degrees on flat ground.**

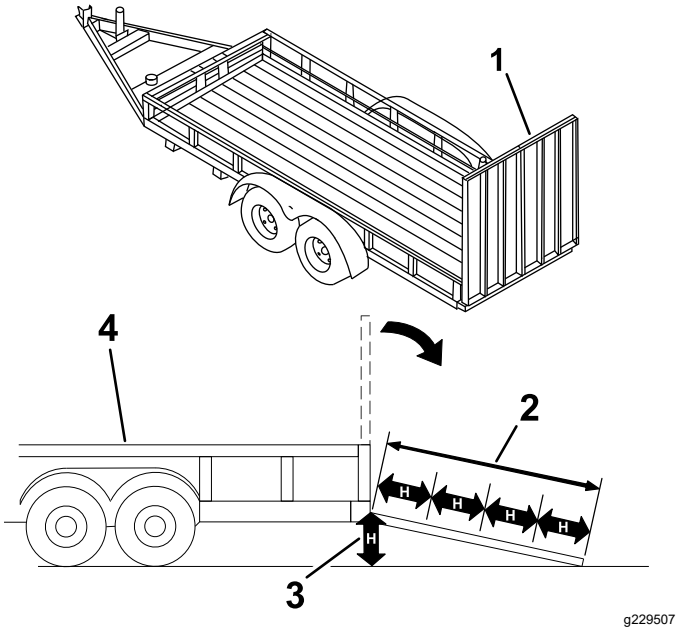

Figure 29

1. Full-width ramp(s) in stowed position
2. Ramp is at least 4 times as long as the height of the trailer or truck bed to the ground
3. H=height of the trailer or truck bed to the ground
4. Trailer

Loading the Machine

⚠ WARNING

Loading or unloading a machine onto a trailer or truck increases the possibility of tip-over and could cause serious injury or death.

- **Use extreme caution when operating a machine on a ramp.**
- **Load and unload the machine with the heavy end up the ramp.**
- **Avoid sudden acceleration or deceleration while driving the machine on a ramp as this could cause a loss of control or a tip-over situation.**

1. If using a trailer, connect it to the towing vehicle and connect the safety chains.
2. If applicable, connect the trailer brakes.
3. Lower the ramp(s).
4. Lower the loader arms.
5. Load the machine onto the trailer with the heavy end up the ramp, carrying loads low, as shown.
   - If the machine has a **full** load-bearing attachment (e.g., bucket) or a non-load-bearing attachment (e.g., trencher), drive the machine forward up the ramp.
   - If the machine has an **empty** load-bearing attachment or no attachment, back the machine up the ramp.

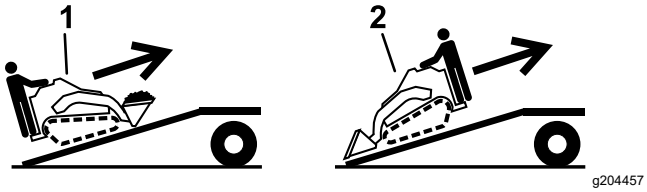

Figure 30

1. Machine with full attachment or non-load-bearing attachment—drive the machine forward up the ramp(s).
2. Machine with empty or no attachment—back the machine up the ramp(s).

6. Lower the loader arms all the way down.
7. Engage the parking brake, shut off the engine, and remove the key.
8. Use the metal tie-down loops on the machine to securely fasten the machine to the trailer or truck with straps, chains, cable, or ropes. Refer to local regulations for tie-down requirements.

Important: **Do not use the middle or track tie-down loops to lift the machine.**

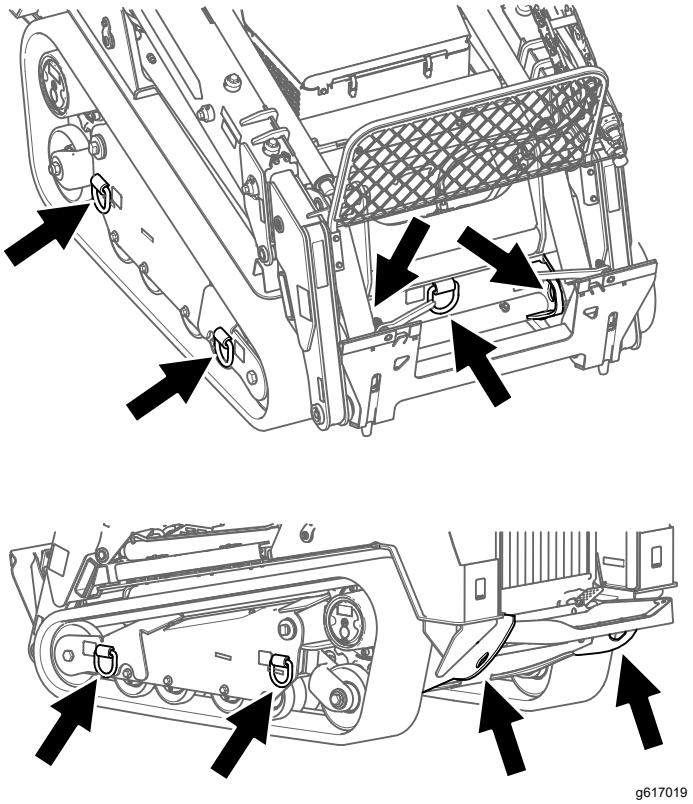

Figure 31

Unloading the Machine

1. Lower the ramp(s).
2. Unload the machine from the trailer with the heavy end up the ramp, carrying loads low.
   - If the machine has a **full** load-bearing attachment (e.g., bucket) or a non-load-bearing attachment (e.g., trencher), back it down the ramp.
   - If the machine has an **empty** load-bearing attachment or no attachment, drive it forward down the ramp.

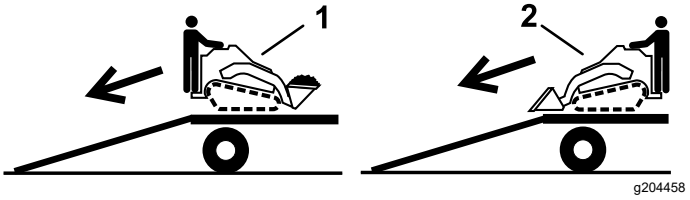

Figure 32

1. Machine with full attachment or non-load-bearing attachment—back the machine down the ramp(s).
2. Machine with empty or no attachment—drive the machine forward down the ramp(s).

Lifting the Machine

Remove any attachments and lift the machine using the 4 lift points; use a spreader bar rated for the machine or edge guards as needed to prevent chain contact with the machine.

Do not exceed a 30-degree angle when lifting the machine; use the minimum chain lengths provided in the following figure.

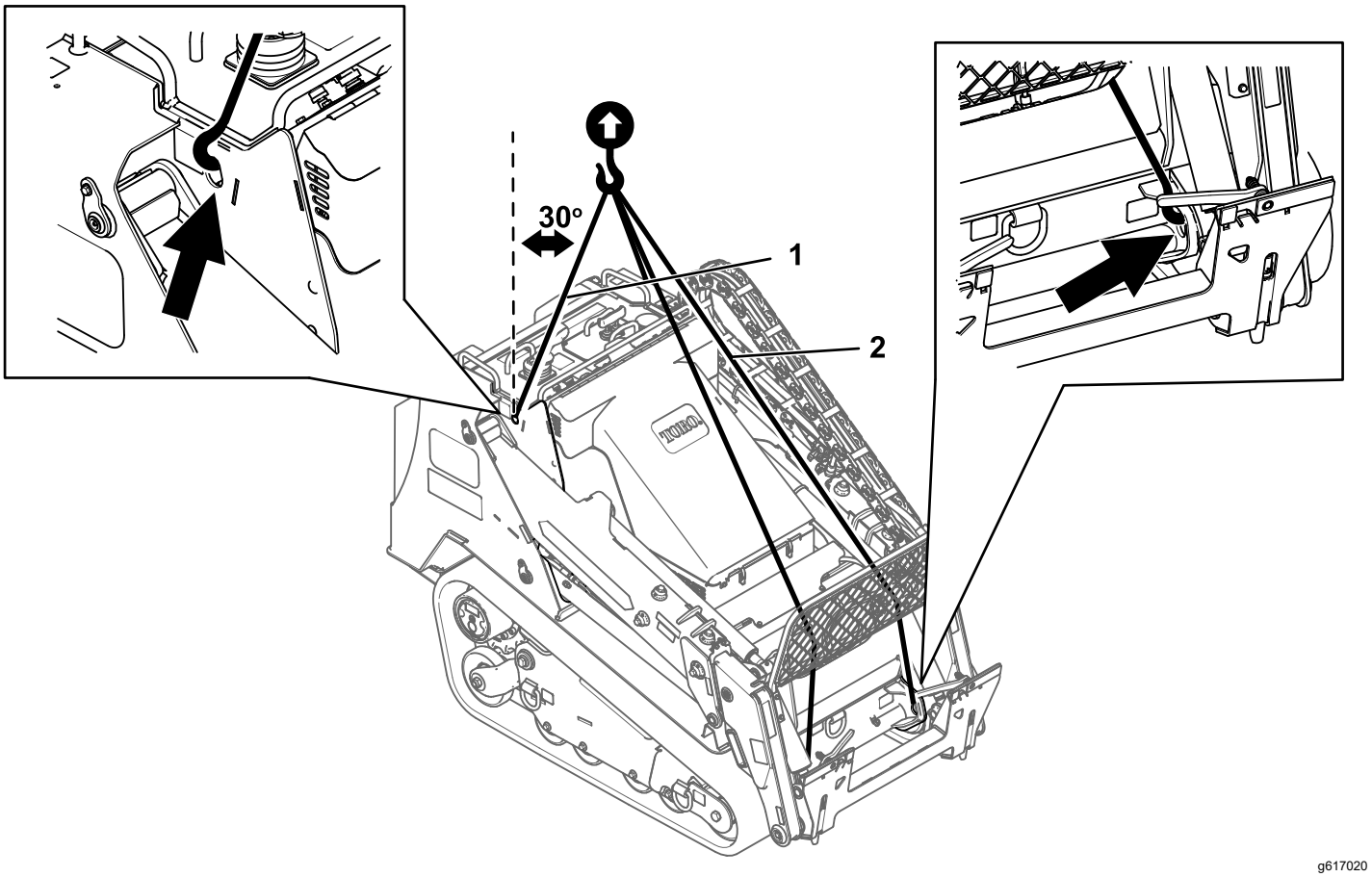

Figure 33

1. Chain length for rear lift point (2)—152.8 cm (60.2 inches)
2. Chain length for front lift point (2)—271.6 cm (106.9 inches)

Maintenance

Note: Download a free copy of the electrical or hydraulic schematic by visiting www.Toro.com and searching for your machine from the Manuals link on the home page.

Note: Determine the left and right sides of the machine from the normal operating position.

Maintenance Safety

⚠ CAUTION

If you leave the key in the switch, someone could accidently start the engine and seriously injure you or other bystanders.

Remove the key from the switch before you perform any maintenance.

- Park the machine on a level surface, disengage the auxiliary hydraulics, lower the attachment, engage the parking brake (if equipped), shut off the engine, and remove the key. Wait for all movement to stop and allow the machine to cool before adjusting, cleaning, storing, or repairing it.
- Clean up oil or fuel spills.
- Do not allow untrained personnel to service the machine.
- Use jack stands to support the components when required.
- Carefully release pressure from components with stored energy; refer to Relieving Hydraulic Pressure (page 54).
- Disconnect the battery before making any repairs; refer to Using the Battery-Disconnect Switch (page 43).
- Keep your hands and feet away from the moving parts. If possible, do not make adjustments with the engine running.
- Keep all parts in good working condition and all hardware tightened. Replace all worn or damaged decals.
- Do not tamper with the safety devices.
- Attachments can change the stability and the operating characteristics of the machine.
- Use only genuine Toro replacement parts.
- If any maintenance or repair requires the loader arms to be in the raised position, secure the arms in the raised position with the hydraulic-cylinder lock(s).
- Refer to local regulations for safely maintaining the machine and attach a warning tag to the control panel to inform others of ongoing maintenance.

Recommended Maintenance Schedule(s)

Maintenance Service Interval	Maintenance Procedure
After the first 8 hours	• Check and adjust the track tension.
After the first 50 hours	• Change the engine oil and filter. • Check and adjust the track tension.
Before each use or daily	• Inspect lift and tie-down points for structural integrity. • Grease the machine. (Grease immediately after every washing.) • Check and lubricate the quick-attach linkages using spray lubricant. • Check the air-filter-service indicator. • Check the engine-oil level. • Clean the tracks and check for excessive wear and proper tension. • Clean the screen, oil cooler, and front of the radiator (more often in dirty or dusty conditions). • Check the coolant level in the expansion tank. • Check and clean the radiator screen • Check the condition of the alternator belt. • Remove debris from the machine. • Check for loose fasteners.

Maintenance Service Interval	Maintenance Procedure
Every 25 hours	• Check the hydraulic-fluid level. • Torque the loader arm adjustment screws (telescoping machines only).
Every 50 hours	• Drain water and other contaminants from the fuel filter/water separator. • Check the battery condition. • Check and adjust the track tension.
Every 100 hours	• Clean and lubricate the underside of the traction controls. • Remove the air-cleaner cover and clean out debris. (Clean more often in dirty or dusty conditions.) • Check the cooling system hoses. • Adjust the alternator belt tension. • Check the hydraulic lines for leaks, loose fittings, kinked lines, loose mounting supports, wear, weather, and chemical deterioration. • Check for dirt buildup in the chassis. • Check the alternator/fan belt tension (refer to the engine owner's manual for instructions).
Every 400 hours	• Change the engine oil and filter. (Service more frequently if conditions are extremely dusty or sandy.) • Replace the fuel filter canister. • Check the fuel lines and connections for deterioration, damage, or loose connections. • Replace the hydraulic oil and filters (if not using Toro fluid).
Every 500 hours	• Replace the water separator filter. • Drain and clean the fuel tank(s)—Authorized Service Dealer only. • Replace the alternator belt—Authorized Service Dealer only • Replace the alternator/fan belt (refer to the engine owner's manual for instructions).
Every 800 hours	• Change the engine coolant.
Every 1,000 hours	• Replace the drive-motor planetary gear oil. • Replace the hydraulic oil and filters (if using Toro fluid).
Every 1,500 hours	• Replace all moving hydraulic hoses.
Yearly	• Replace the air-cleaner filter.
Yearly or before storage	• Check and adjust the track tension. • Touch up chipped paint.
Every 2 years	• Replace all moving hydraulic hoses.

Important: **Refer to your engine owner's manual for additional maintenance procedures.**

Pre-Maintenance Procedures

Using the Cylinder Lock

⚠ WARNING

The loader arms may lower when in the raised position, crushing anyone under them, which could result in death or serious injury.

Install the cylinder lock(s) before performing maintenance that requires raised loader arms.

Installing the Cylinder Lock

1. Remove the attachment.
2. Raise the loader arms to the fully raised position.
3. Shut off the engine and remove the key.
4. Remove the 2 pins securing the cylinder lock to the posts on the side of the machine.
5. Slide the cylinder lock over the lift-cylinder rod (Figure 34).

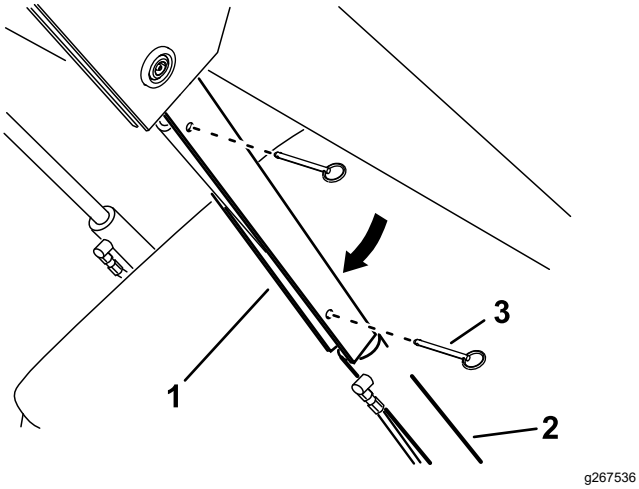

Figure 34

1. Cylinder lock
2. Lift-cylinder rod
3. Pin (2)

6. **Slowly** lower the loader arms until the cylinder lock contacts the cylinder body and rod end.

Removing and Storing the Cylinder Lock

Important: **Remove the cylinder lock from the rod and fully secure it in the storage position before operating the machine.**

1. Start the engine.
2. Raise the loader arms to the fully raised position.
3. Shut off the engine and remove the key.
4. Remove the pins securing the cylinder lock.
5. Place the cylinder lock on the posts on the sides of the machine and secure with the pins.
6. Lower the loader arms.

Accessing Internal Components

⚠ WARNING

Opening or removing covers, hoods, and screens while the engine is running could allow you to contact moving parts, seriously injuring you.

Before opening any of the covers, hoods, and screens, shut off the engine, remove the key from the key switch, and allow the engine to cool.

Opening the Hood

1. Raise the loader arms and install the cylinder lock.
2. Shut off the engine and remove the key.
3. Loosen the hood-locking screw (Figure 35).

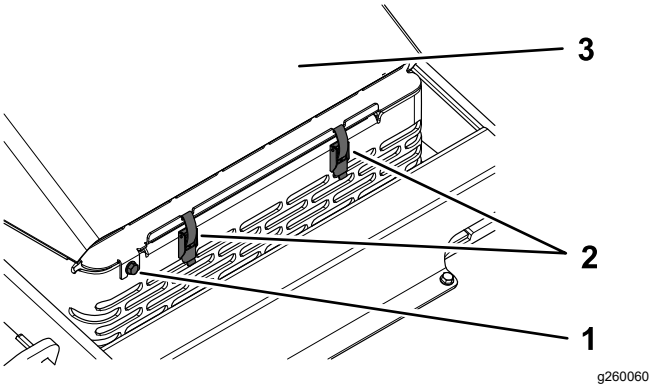

Figure 35

1. Hood-locking screw
2. Hood-latch lever
3. Hood

4. Hold the hood down and release the 2 latches (Figure 35).
5. Lift open the hood (Figure 35).

Closing the Hood

1. Lower the hood, and hold it down while you secure the latches.
2. Tighten the hood-locking screw (Figure 35).
3. Remove the cylinder lock and lower the loader arms.

Opening the Rear-Access Cover

1. Remove the fastener (Figure 36).

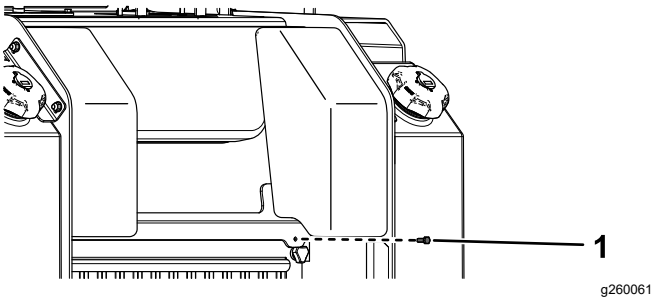

Figure 36

1. Fastener

2. Lift the rear-access cover up and secure the prop rod to access the internal components (Figure 36).

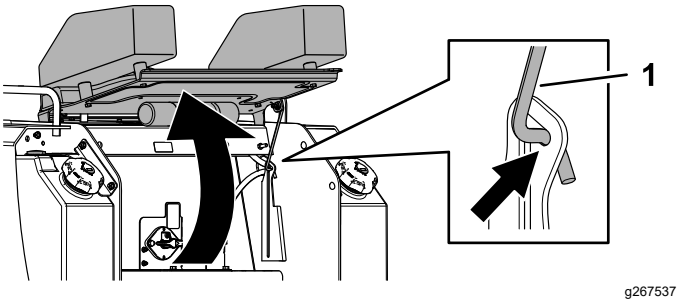

Figure 37

1. Prop rod

Removing the Rear Screen

1. Open the rear-access cover; refer to Opening the Rear-Access Cover (page 35).
2. Loosen the 2 bolts securing the bottom of the screen (Figure 38).
3. Loosen the 2 knobs on the screen (Figure 38).

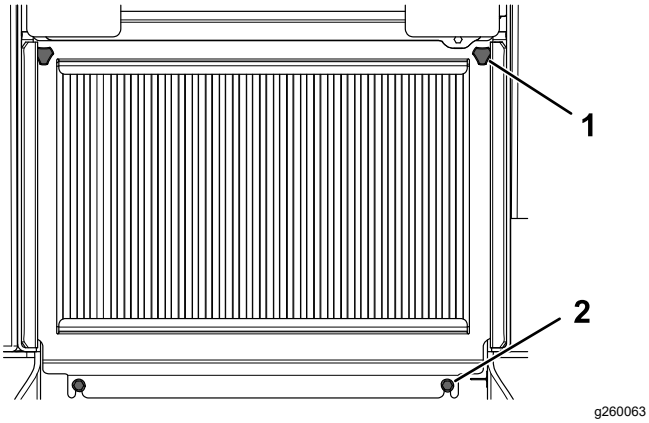

Figure 38

1. Knob (2)
2. Bolt (2)

4. Lift the screen and remove it (Figure 38).

Removing the Bottom Plate

1. Remove the 2 bolts securing the bottom plate (Figure 39).

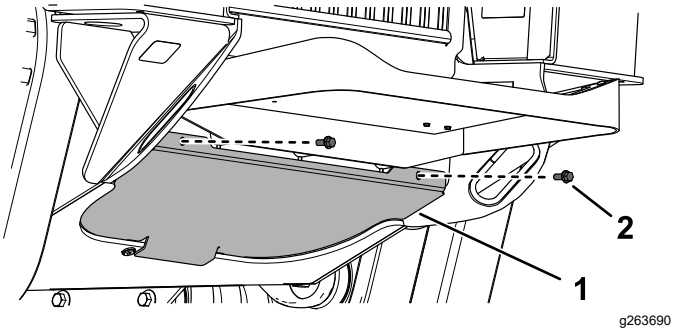

Figure 39

1. Bottom plate
2. Bolt

2. Remove the bottom plate.

Removing the Front Cover

1. Raise the loader arms and secure them with the cylinder lock.
2. Loosen the 2 bolts securing the front cover to the machine.

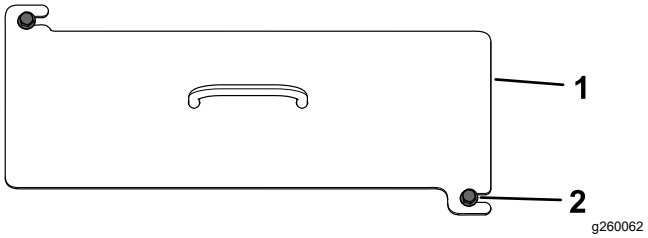

Figure 40

1. Front cover
2. Bolt (2)

3. Slide the cover off the machine.
4. When installing the cover, torque the bolts to 41 N·m (30 ft-lb).

Removing the Front Cover Assembly

1. Raise the loader arms and secure them with the cylinder lock.
2. Remove the 4 bolts securing the cover assembly to the machine.

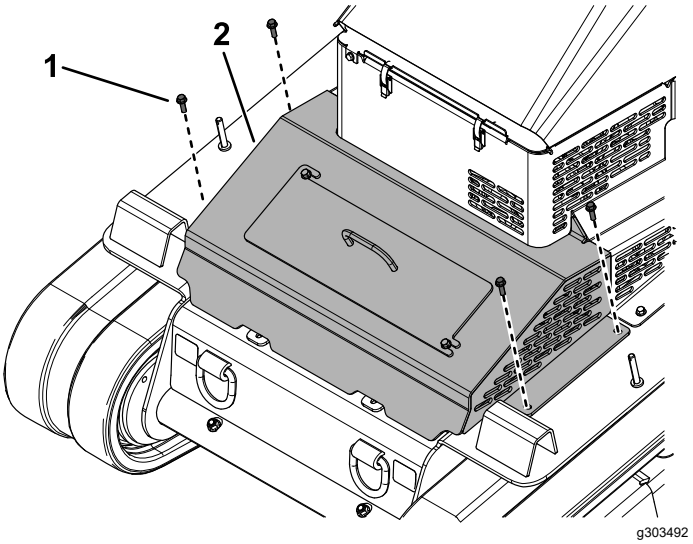

Figure 41

1. Bolt (4)
2. Front cover assembly.

3. Remove the cover assembly.

Lubrication

Lubricating the Machine

Service Interval: Before each use or daily (Grease immediately after every washing.)

Grease Type: General-purpose grease.

1. Park the machine on a level surface, engage the parking brake, and lower the loader arms.
2. Shut off the engine and remove the key.
3. Clean the grease fittings with a rag.
4. Connect a grease gun to each fitting (Figure 42, Figure 43, and Figure 44).

   Note: Raise the loader arms before greasing the fittings in Figure 44.

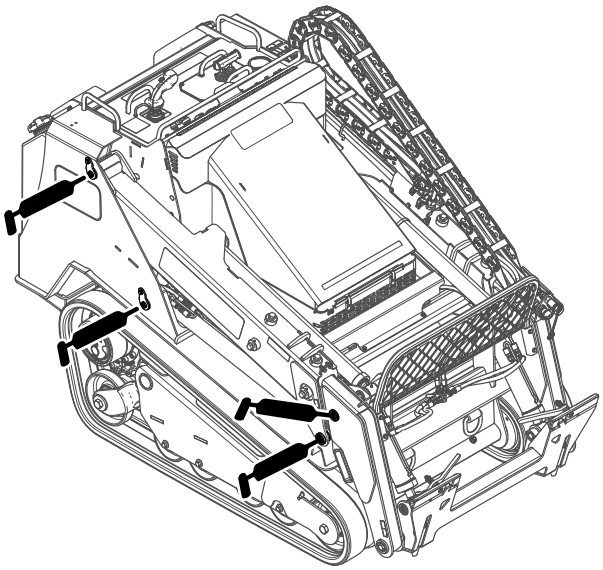

g617021

Figure 42

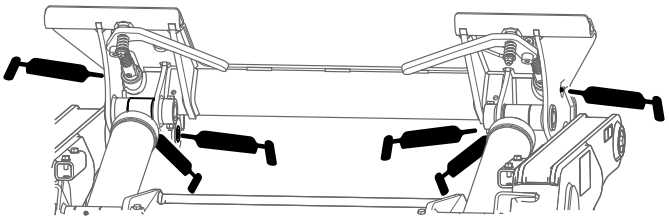

g261039

Figure 43

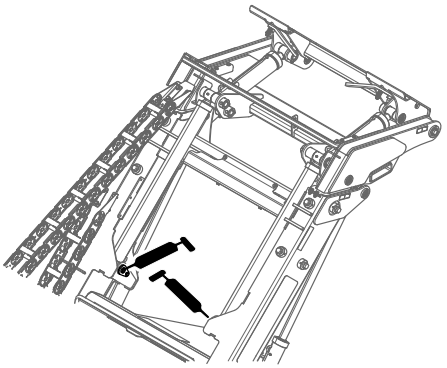

g264003

Figure 44

5. Pump grease into the fittings until grease begins to ooze out of the bearings (approximately 3 pumps).
6. Wipe up any excess grease.
7. Lubricate the quick-attach linkages using spray lubricant (Figure 45).

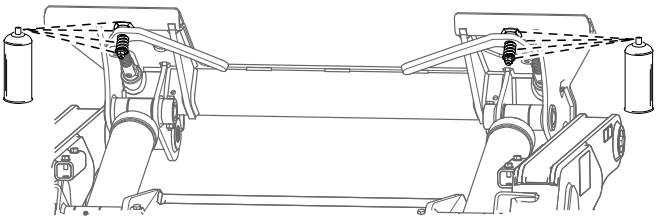

g269591

Figure 45

Engine Maintenance

Engine Safety

- Shut off the engine before checking the oil or adding oil to the crankcase.
- Do not change the engine governor setting or overspeed the engine.
- Keep your hands, feet, face, other body parts, and clothing away from the muffler and other hot surfaces.

Servicing the Air Cleaner

Service Interval: Before each use or daily—Check the air-filter-service indicator.

Every 100 hours—Remove the air-cleaner cover and clean out debris. (Clean more often in dirty or dusty conditions.)

Yearly—Replace the air-cleaner filter.

Check the air-cleaner body for damage, which could cause an air leak. Replace the body if it is damaged. Check the intake system for leaks, damage, or loose hose clamps.

Service the air-cleaner filter only when the service indicator (Figure 46) requires it. Changing the air filter before it is necessary increases the chance of dirt entering the engine when you remove the filter.

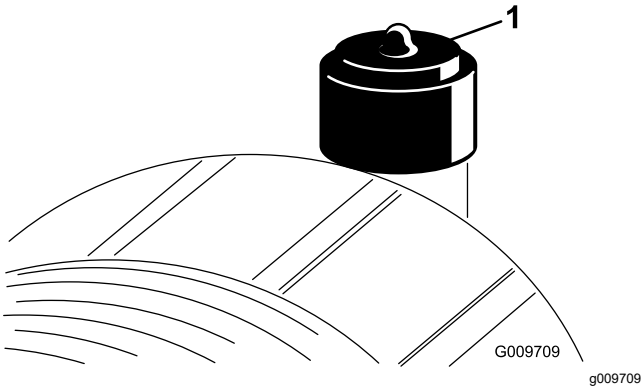

Figure 46

1. Air-cleaner indicator

Important: **Ensure that the cover is seated correctly and seals with the air-cleaner body.**

1. Replace the air cleaner (Figure 47).

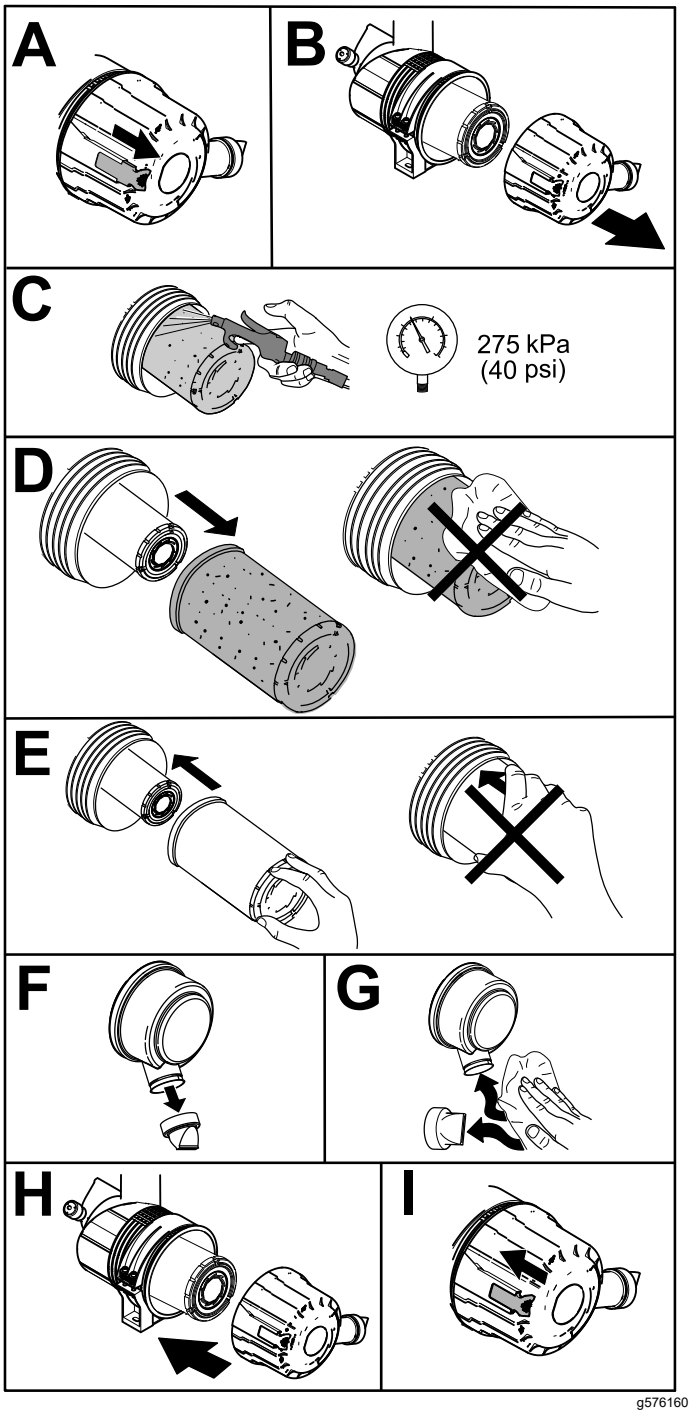

Figure 47

Note: Do not clean a used element; cleaning it can damage the filter media.

Important: **Never attempt to clean the safety filter (Figure 48). Replace the safety filter after every 3 primary filter services.**

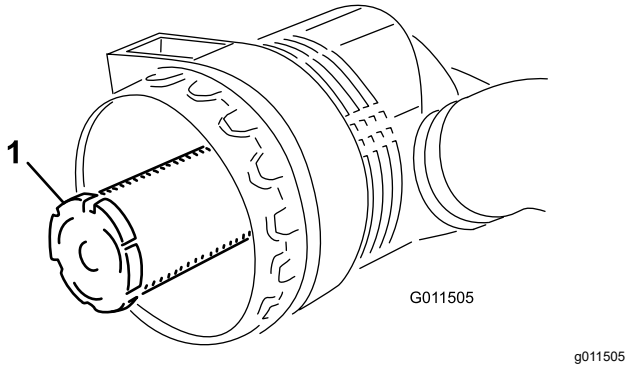

Figure 48

1. Air-cleaner safety filter

2. Reset the indicator (Figure 46) if it shows red.

Servicing the Engine Oil

Service Interval: Before each use or daily—Check the engine-oil level.

After the first 50 hours—Change the engine oil and filter.

Every 400 hours—Change the engine oil and filter. (Service more frequently if conditions are extremely dusty or sandy.)

Engine-Oil Specifications

Oil Type: Detergent diesel engine oil (API service CH-4 or higher)

Crankcase Capacity: with filter 7.0 L (1.85 US gallons)

Viscosity: See the table below.

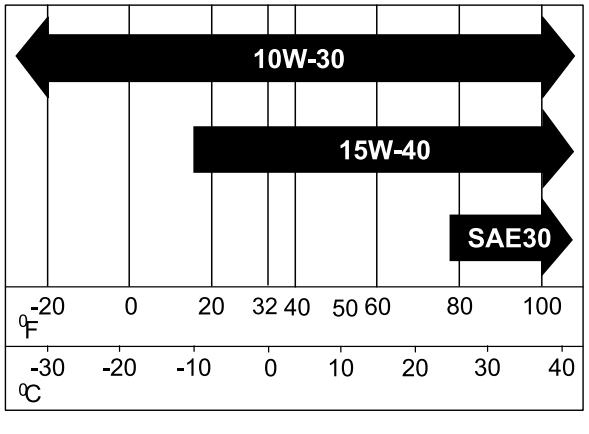

Figure 49

Checking the Engine-Oil Level

1. Park the machine on a level surface, engage the parking brake, and lower the loader arms.
2. Shut off the engine, remove the key, and allow the engine to cool.
3. Open the hood.
4. Clean the area around the oil dipstick and oil-fill cap (Figure 50).

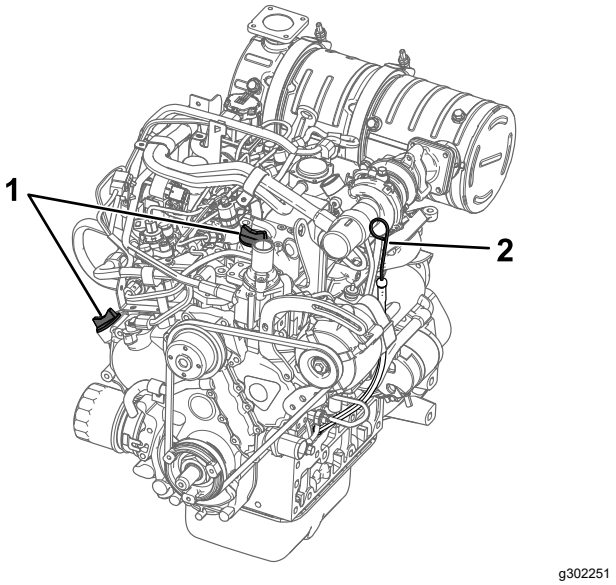

Figure 50

1. Oil-fill cap
2. Oil dipstick

5. Check the oil and add additional oil as needed (Figure 51).

   Important: **Do not overfill the crankcase with oil; if the oil in the crankcase is too high and you run the engine, you may damage the engine.**

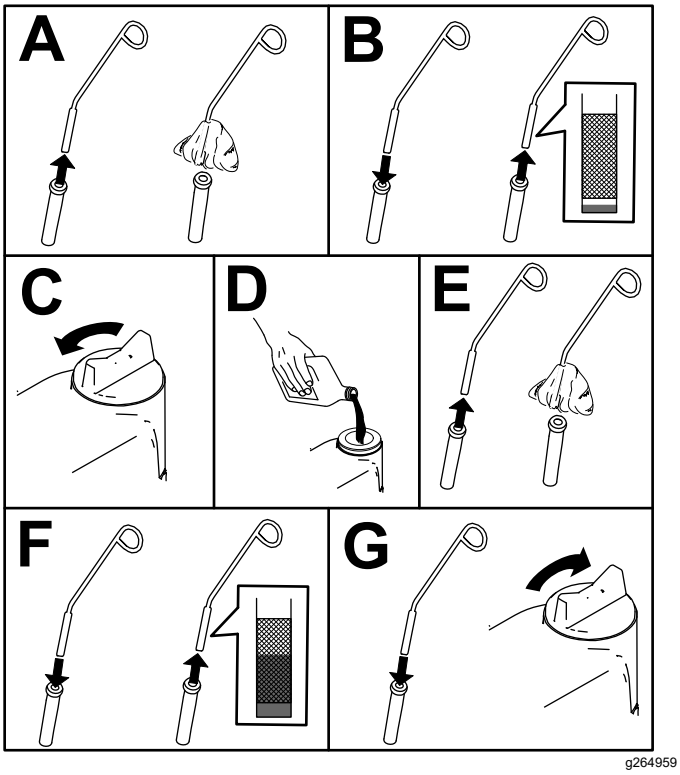

Figure 51

6. Close the hood.

Changing the Engine Oil and Filter

1. Start the engine and let it run for 5 minutes.

   Note: This warms the oil so that it drains better.

2. Park the machine on a level surface.
3. Raise the loader arms and secure with the cylinder lock.
4. Engage the parking brake, shut off the engine, and remove the key.
5. Drain the oil beneath the platform.

   ⚠ CAUTION

   Components will be hot if the machine has been running. If you touch hot components, you may be burned.

   Use care to avoid touching hot components while changing the oil and/or filter.

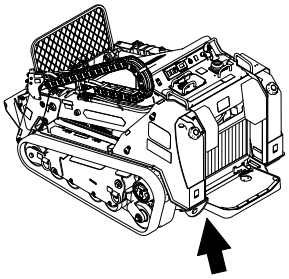

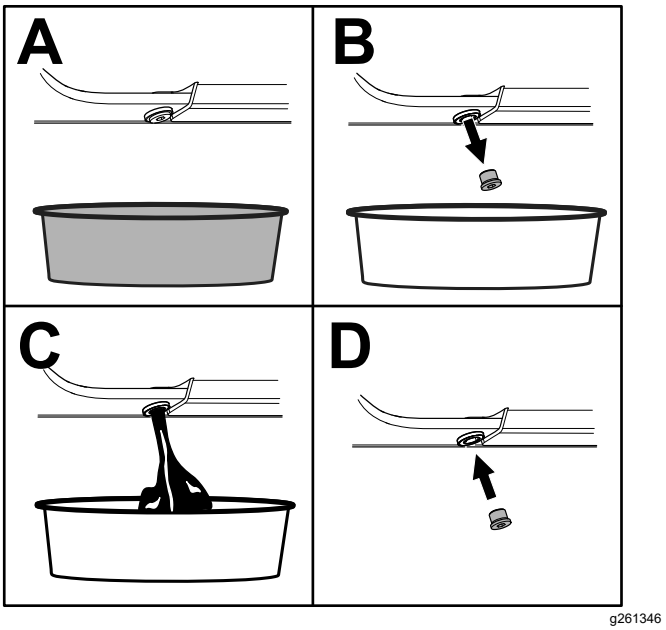

Figure 52

6. Torque the drain plug to 46 to 56 N·m (34 to 42 ft-lb).
7. Open the hood and secure the prop rod (if applicable).
8. Remove the front cover assembly; refer to Removing the Front Cover Assembly (page 36).
9. Place a shallow pan or rag under the filter to catch oil.
10. Change the oil filter.

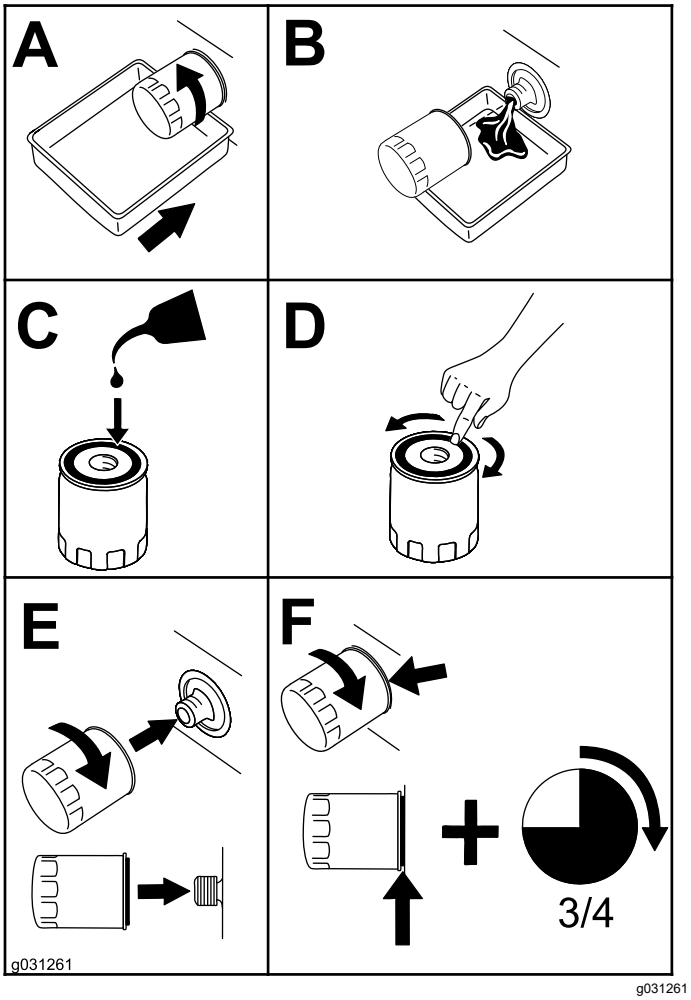

Figure 53

11. Remove the oil-fill cap and slowly pour approximately 80% of the specified amount of oil in through the valve cover.
12. Check the oil level.
13. Slowly add additional oil to bring the level to the upper hole on the dipstick.
14. Replace the fill cap.
15. Install the front cover assembly.
16. Close the hood.

Note: Dispose of the used oil at a certified recycling center.

Fuel System Maintenance

⚠ DANGER

In certain conditions, fuel is extremely flammable and highly explosive. A fire or explosion from fuel can burn you and others and can damage property.

Refer to Fuel Safety (page 21) for a complete list of fuel related precautions.

Draining the Water Separator

Service Interval: Every 50 hours

1. Park the machine on a level surface, engage the parking brake, and lower the loader arms.
2. Shut off the engine and remove the key.
3. Open the rear access cover; refer to Opening the Rear-Access Cover (page 35)
4. Remove the rear screen; refer to Removing the Rear Screen (page 36)
5. Place a container under the water separator.
6. Disconnect the wire harness from the water separator (Figure 54).

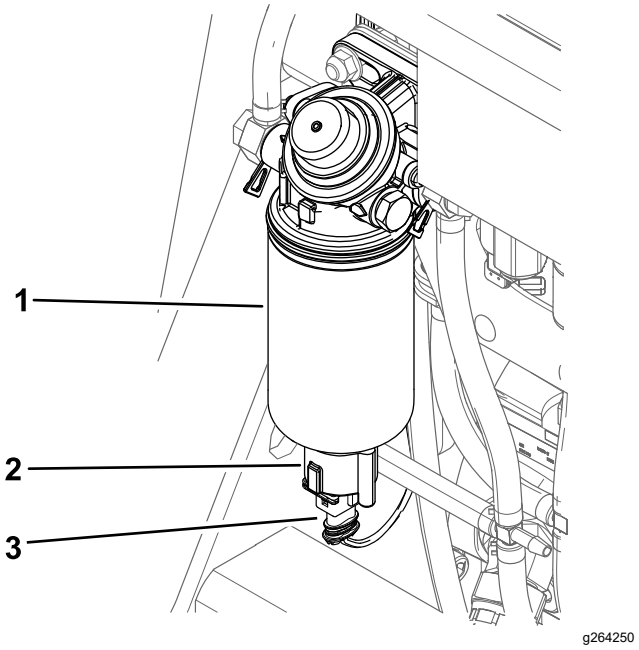

Figure 54

1. Water separator
2. Switch
3. Drain valve

7. Unscrew the switch from bottom of the filter canister and allow the water to drain (Figure 54).

8. Install the switch (Figure 54).
9. Connect the wire harness to the switch (Figure 54).
10. Install the rear screen and tighten the knobs and bolts to secure it.
11. Close the rear-access cover and install the fastener to secure it.
12. Bleed the fuel system; refer to Bleeding the Fuel System (page 43).

Replacing the Water Separator Filter

Service Interval: Every 500 hours

1. Park the machine on a level surface, engage the parking brake, and lower the loader arms.
2. Shut off the engine and remove the key.
3. Open the rear access cover; refer to Opening the Rear-Access Cover (page 35).
4. Remove the rear screen; refer to Removing the Rear Screen (page 36).
5. Disconnect the wire harness from the water separator.
6. Unscrew the switch and drain the water separator (Figure 54).
7. Clean the area where the filter mounts.
8. Remove the filter and clean the mounting surface.
9. Lubricate the gasket on the filter with clean oil.
10. Install the filter by hand until the gasket contacts the mounting surface; then rotate an additional 1/2 turn.
11. Install the switch to the filter.
12. Connect the wire harness to the switch.
13. Install the rear screen and tighten the knobs and bolts.
14. Close the rear-access cover and install the fastener.

Replacing the Fuel Filter Canister

Service Interval: Every 400 hours

1. Park the machine on a level surface, engage the parking brake, and lower the loader arms.
2. Shut off the engine and remove the key.
3. Open the rear access cover; refer to Opening the Rear-Access Cover (page 35)
4. Remove the rear screen; refer to Removing the Rear Screen (page 36)
5. Place a clean container under the fuel filter canister (Figure 55).

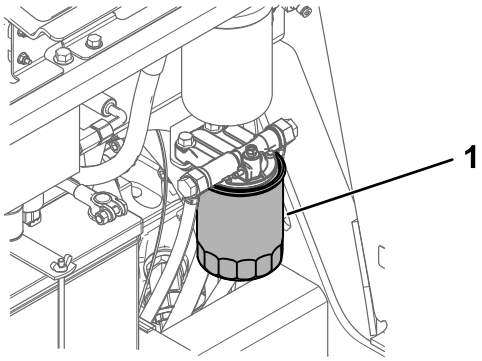

g261736

Figure 55

1. Fuel filter canister

6. Remove the filter canister and clean the mounting surface.
7. Lubricate the gasket on the new filter canister with clean oil.
8. Fill the canister with fuel.
9. Install the filter canister by hand until the gasket contacts the mounting surface, then rotate it an additional 1/2 turn.
10. Install the rear screen and tighten the knobs and bolts to secure it.
11. Close the rear-access cover and install the fastener to secure it.

Checking the Fuel Lines and Connections

Service Interval: Every 400 hours/Yearly (whichever comes first)

Inspect the fuel lines and connections for deterioration, damage, or loose connections. Tighten any loose connections and contact your Authorized Service Dealer for assistance in fixing damaged fuel lines.

Bleeding the Fuel System

You must bleed the fuel system before starting the engine if any of the following situations have occurred:

- Initial startup of a new machine
- The engine has ceased running due to a lack of fuel.
- Maintenance has been performed upon fuel-system components (e.g., filter replaced).

Use the manual pump on the water separator to bleed air out of the fuel system.

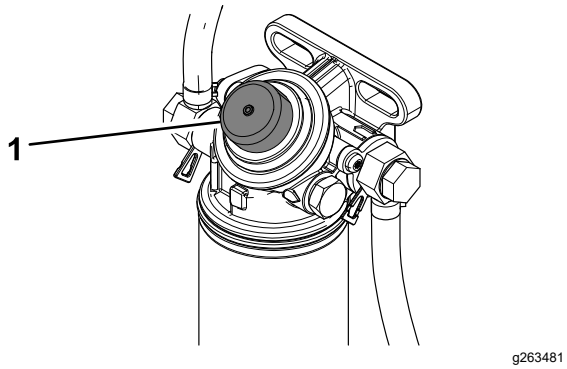

Figure 56

1. Manual pump

Draining the Fuel Tank(s)

Service Interval: Every 500 hours

Have an Authorized Service Dealer drain and clean the fuel tank(s).

Electrical System Maintenance

Electrical System Safety

- Disconnect the battery before making any repairs; refer to Using the Battery-Disconnect Switch (page 43).
- Charge the battery in an open, well-ventilated area, away from sparks and flames. Unplug the charger before connecting or disconnecting the battery. Wear protective clothing and use insulated tools.
- Battery acid is poisonous and can cause burns. Avoid contact with skin, eyes, and clothing. Protect your face, eyes, and clothing when working with a battery.
- Battery gases can explode. Keep cigarettes, sparks, and flames away from the battery.

Using the Battery-Disconnect Switch

1. Park the machine on a level surface, engage the parking brake, and lower the loader arms.
2. Shut off the engine and remove the key.
3. Open the rear-access cover.
4. Turn the battery-disconnect switch to the ON or OFF position to perform the following:
   - To energize the machine electrically, rotate the battery-disconnect switch clockwise to the ON position (Figure 57).
   - To de-energize the machine electrically, rotate the battery-disconnect switch counterclockwise to the OFF position (Figure 57).

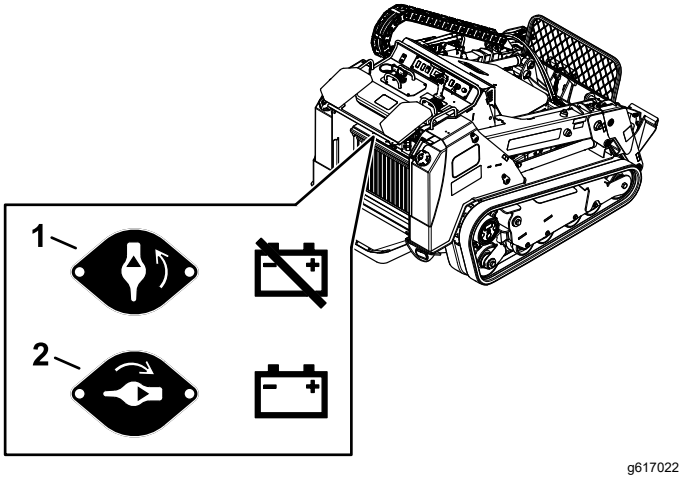

Figure 57

1. Battery-disconnect switch—OFF position
2. Battery-disconnect switch—ON position

Servicing the Battery

Service Interval: Every 50 hours—Check the battery condition.

Removing the Battery

⚠ WARNING

Incorrect battery cable routing could damage the machine and cables, causing sparks. Sparks can cause the battery gasses to explode, resulting in personal injury.

Always disconnect the negative (black) battery cable before disconnecting the positive (red) cable.

1. Park the machine on a level surface, engage the parking brake, and lower the loader arms.
2. Shut off the engine and remove the key.
3. Remove the rear screen; refer to Removing the Rear Screen (page 36).
4. Disconnect the negative (black) ground cable from the battery post (Figure 58). Retain the fasteners.

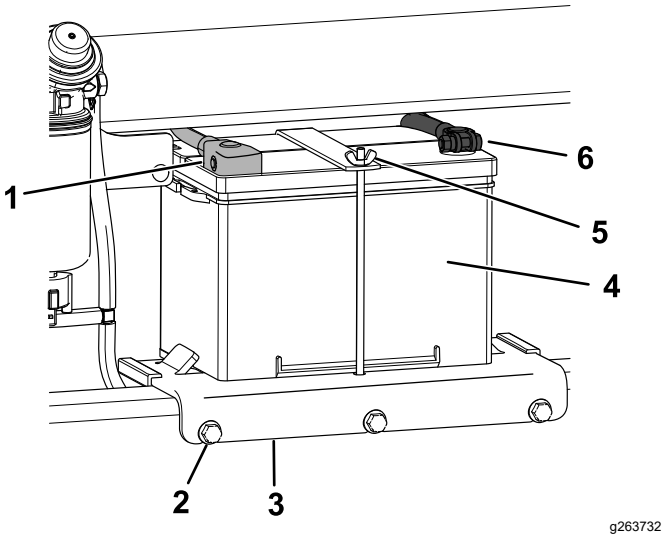

Figure 58

1. Positive cable
2. Bolt (3)
3. Battery tray
4. Battery
5. Wing nut
6. Negative cable

5. Slide the rubber cover off the positive (red) cable.
6. Disconnect the positive (red) cable from the battery post (Figure 58). Retain the fasteners.
7. Loosen the 3 bolts securing the battery tray and remove the tray with the battery (Figure 58).
8. Remove the wing nut and rod.
9. Remove the battery.

Charging the Battery

⚠ WARNING

Charging the battery produces gasses that can explode.

Never smoke near the battery and keep sparks and flames away from battery.

Important: **Always keep the battery fully charged (1.265 specific gravity). This is especially important to prevent battery damage when the temperature is below 0°C (32°F).**

1. Remove the battery from the machine; refer to Removing the Battery (page 44).
2. Charge the battery for 4 to 8 hours at a rate of 3 to 4 A (Figure 59). Do not overcharge the battery.

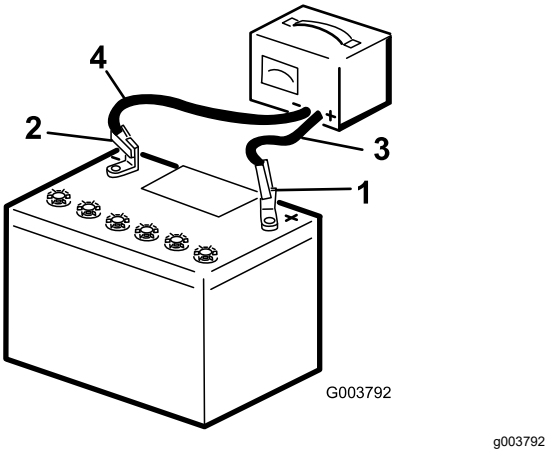

Figure 59

1. Positive battery post
2. Negative battery post
3. Red (+) charger lead
4. Black (-) charger lead

3. When the battery is fully charged, unplug the charger from the electrical outlet, then disconnect the charger leads from the battery posts (Figure 59).

Cleaning the Battery

Note: Keep the terminals and the entire battery case clean to help extend battery life.

1. Park the machine on a level surface, engage the parking brake (if equipped), and lower the loader arms.
2. Shut off the engine and remove the key.
3. Remove the battery from the machine; Removing the Battery (page 44).
4. Wash the entire case with a solution of baking soda and water.
5. Rinse the battery with clear water.
6. Coat the battery posts and cable connectors with Grafo 112X (skin-over) grease or petroleum jelly to prevent corrosion.
7. Install the battery; refer to Installing the Battery (page 45).

Installing the Battery

⚠ WARNING

Incorrect battery cable routing could damage the machine and cables, causing sparks. Sparks can cause the battery gasses to explode, resulting in personal injury.

Always connect the positive (red) battery cable before connecting the negative (black) cable.

1. Place the battery on the battery tray and secure it with the wing nut and rod (Figure 58).
2. Install the battery tray to the machine and secure with the 3 bolts (Figure 58). Torque the bolts to 41 N·m (30 ft-lb).
3. Using the fasteners previously removed, install the positive (red) battery cable to the positive (+) battery terminal (Figure 58).
4. Slide the red terminal boot onto the positive battery post.
5. Using the fasteners previously removed, install the negative (black) battery cable to the negative (-) battery terminal (Figure 58).
6. Install the rear screen.

Servicing a Replacement Battery

The original battery is maintenance-free and does not require service. For servicing a replacement battery, refer to the battery manufacturer's instructions.

Jump-Starting the Machine

⚠ WARNING

Jump-starting the battery can produce gasses that can explode.

Do not smoke near the battery, and keep sparks and flames away from battery.

1. Open the rear-access cover; refer to Opening the Rear-Access Cover (page 35).
2. Remove the rear screen; refer to Removing the Rear Screen (page 36).
3. Check and clean corrosion from the battery terminals before jump-starting. Ensure that the connections are tight.

⚠ CAUTION

Corrosion or loose connections can cause unwanted electrical voltage spikes at any time during the jump-starting procedure.

Do not attempt to jump-start the machine with loose or corroded battery terminals, or damage to the engine may occur.

⚠ DANGER

Jump-starting a weak battery that is cracked or frozen or has a low electrolyte level or an open/shorted battery cell can cause an explosion, resulting in serious personal injury.

Do not jump-start a weak battery if these conditions exist.

4. Make sure that the booster battery is a good and fully charged lead-acid battery at 12.6 V or greater.

   Note: Use properly sized jumper cables with short lengths to reduce voltage drop between systems. Make sure that the cables are color coded or labeled for the correct polarity.

⚠ WARNING

Batteries contain acid and produce explosive gases.

- **Shield your eyes and face from the batteries at all times.**
- **Do not lean over the batteries.**

Note: Ensure that the vent caps are tight and level. Place a damp cloth, if available, over any vent caps on both batteries. Also ensure that the machines do not touch and that both electrical systems are off and at the same rated system voltage. These instructions are for negative ground systems only.

5. Connect the positive (+) cable to the positive (+) terminal of the discharged battery that is wired to the starter or solenoid as shown in Figure 60.

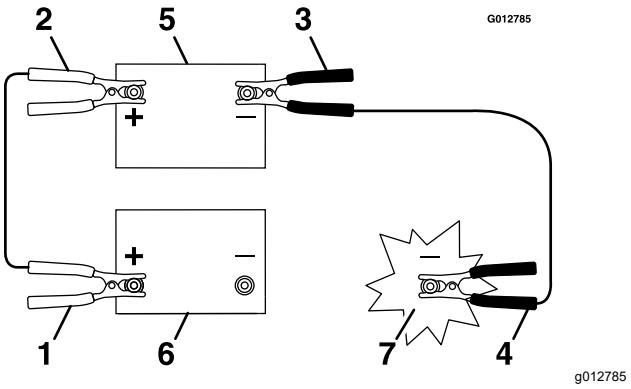

Figure 60

1. Positive (+) cable on discharged battery
2. Positive (+) cable on booster battery
3. Negative (–) cable on the booster battery
4. Negative (–) cable on the engine block
5. Booster battery
6. Discharged battery
7. Engine block

6. Connect the other end of the positive (+) jumper cable to the positive terminal of the battery in the other machine.
7. Connect an end of the negative (-) jumper cable to the negative post of the battery in the other machine.
8. Connect the other end of the negative (-) jumper cable to a ground point, such as an unpainted bolt or chassis member.
9. Start the engine in the other machine. Let it run a few minutes, then start your engine.
10. Remove the cables in the reverse order of connection.
11. Install the cover to the jump post.

Servicing the Fuses

The electrical system is protected by fuses. It requires no maintenance; however, if a fuse blows, check the component/circuit for a malfunction or a short. Figure 61 illustrates the fuse block location.

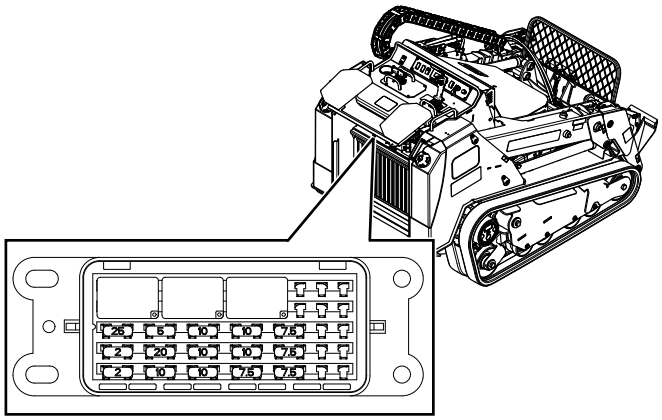

g617033

Figure 61

Fuse Layout

	1	2	3	4	5	6	7	8	9	10	11	12
A	(Relay)			(Relay)			(Relay)			-	-	-
B										-	-	-
C	Engine (25 A)		System (5 A)		Display (10 A)		Accessory Connection (10 A)		TEC Power (7.5 A)		-	-
D	Logic TEC (2 A)		Starter Solenoid (20 A)		Horn (10 A)		Accessory Connection (10 A)		TEC Power (7.5 A)		-	-
E	Telematics (2 A)		Power Point (10 A)		Accessory Connection (10 A)		TEC Power (7.5 A)		TEC Power (7.5 A)		-	-

Note: If the machine does not start, either the main circuit or the control panel/relay fuse could be blown.

Replacing the Drive-Motor Planetary Gear Oil

Service Interval: Every 1,000 hours

Oil Type: SAE 85W-140 gear oil

Capacity: 0.9 L (30 fl oz)

1. Start the engine and drive the machine for 5 minutes.

   Note: This warms the gear oil so that it drains better.

2. Park the machine on a level surface so that the drain plug is in the 6 o'clock position (Figure 62), engage the parking brake, and lower the loader arms.
3. Shut off the engine and remove the key.
4. Place a drain pan under the drive motor.
5. Remove the check plug and the drain plug and allow the gear lubricant to drain (Figure 62).

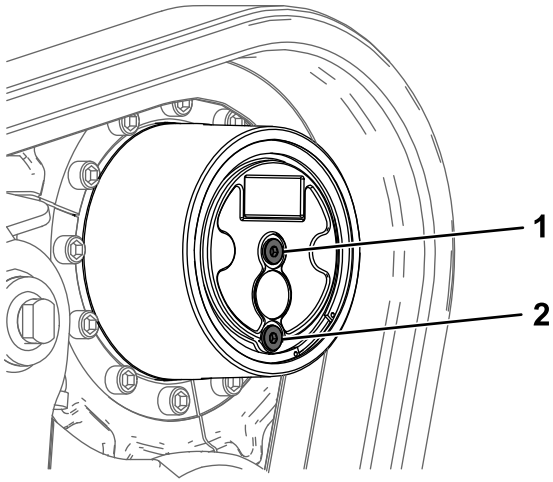

g267652

Figure 62

1. Check plug
2. Drain plug

6. Install the drain plug (Figure 62).
7. Fill the drive motor with gear oil through the check hole until the oil is up to the bottom of the hole.

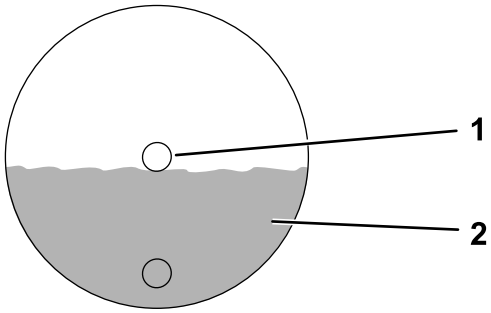

g267669

Figure 63

1. Check plug
2. Gear oil

8. Install the check plug.
9. Repeat for the other drive motor.
10. Start the engine and drive the machine a few minutes.
11. Park the machine on a level surface, engage the parking brake, shut off the engine and remove the key.
12. Remove the check plugs and verify that the oil level is at the bottom of the oil-level check hole. Add oil as needed.
13. Install the check plugs. Torque the check and drain plugs to 30 to 40 N·m (22 to 30 ft-lb).

Servicing the Tracks

Service Interval: After the first 8 hours—Check and adjust the track tension.

After the first 50 hours—Check and adjust the track tension.

Every 50 hours—Check and adjust the track tension.

Before each use or daily—Clean the tracks and check for excessive wear and proper tension.

Cleaning the Tracks

1. Park the machine on a level surface and engage the parking brake.
2. With the bucket installed and angled downward, lower it into the ground so that the front of the traction unit lifts off the ground a few centimeters (inches).
3. Shut off the engine and remove the key.
4. Using a water hose or pressure washer, remove dirt from each track system.

Important: **Ensure that you use high-pressure water to wash only the track area. Do not use a high-pressure washer to clean the rest of the traction unit. Do not use high pressure water between the drive sprocket and the traction unit or you may damage the motor seals. High-pressure washing can damage the electrical system and hydraulic valves or deplete grease.**

Important: **Ensure that you fully clean the road wheels, the front wheel, and the drive sprocket (Figure 64). The road wheels should rotate freely when clean.**

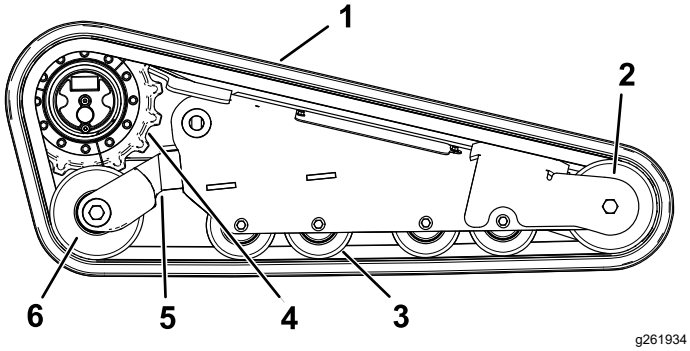

Figure 64

1. Track
2. Front wheel
3. Road wheel (4)
4. Sectional drive sprocket
5. Tensioner
6. Rear wheel

Checking the Track Tension

1. Park the machine on a level surface and engage the parking brake.
2. With the bucket installed and angled downward, lower it into the ground so that the front of the traction unit lifts off the ground a few centimeters (inches).

   Note: If you do not have a bucket, raise the machine and support it using jackstands rated for the weight of the machine; refer to Specifications (page 20).

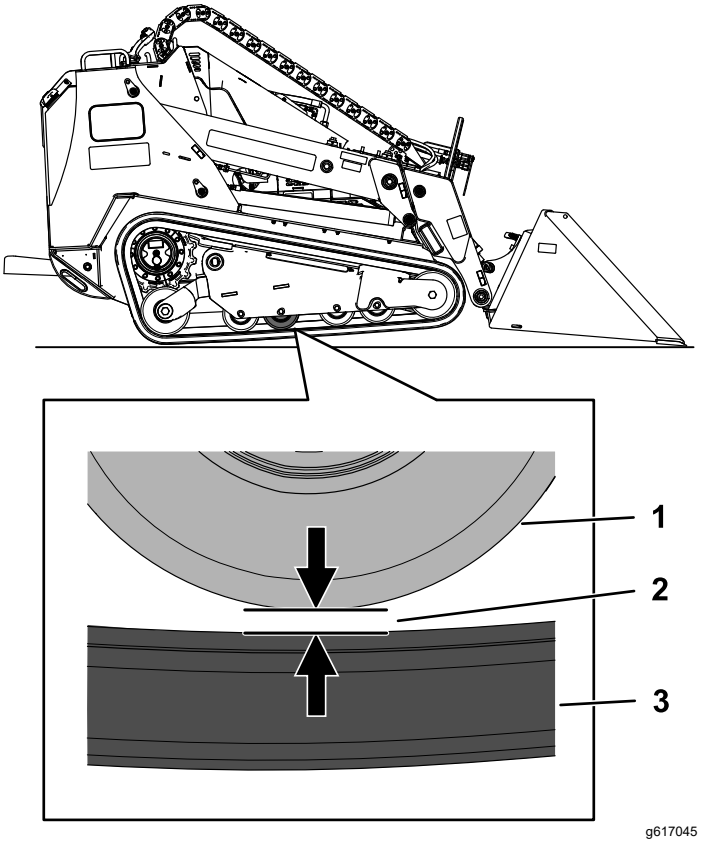

Figure 65

1. Road wheel
2. Gap is 20 mm (0.8 inch).
3. Track

3. Shut off the engine and remove the key.
4. Verify that the gap between the 2nd road wheel from the rear and the track is 20 mm (0.8 inch) as shown in Figure 65. If adjustment is needed, proceed to Adjusting the Track Tension (page 49)

Adjusting the Track Tension

1. Park the machine on a level surface and engage the parking brake.
2. Place a 15 x 15 cm (6 x 6 inch) block under the rear frame of the machine, directly behind the track being tensioned.
3. With the bucket installed and angled downward, lower it into the ground so that the front of the traction unit lifts off the ground a few centimeters

(inches) and the machine tips back onto the block until the track is completely off the ground.

Note: If you do not have a bucket, raise the machine and support it using jackstands rated for the weight of the machine; refer to Specifications (page 20).

4. Shut off the engine and remove the key.
5. Loosen the 2 bolts and rotate the access cover open (Figure 66).

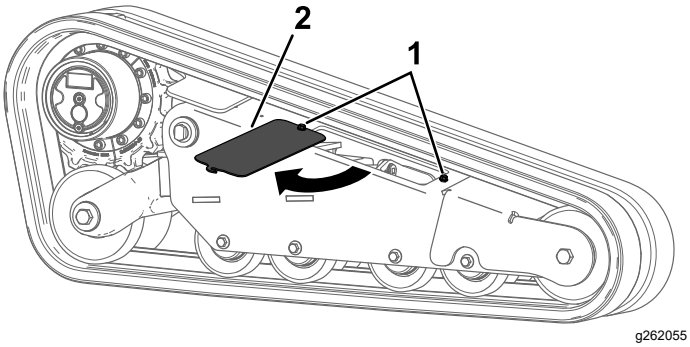

Figure 66

1. Bolt
2. Access cover

6. Remove the locking bolt, spacer, and nut (Figure 67).

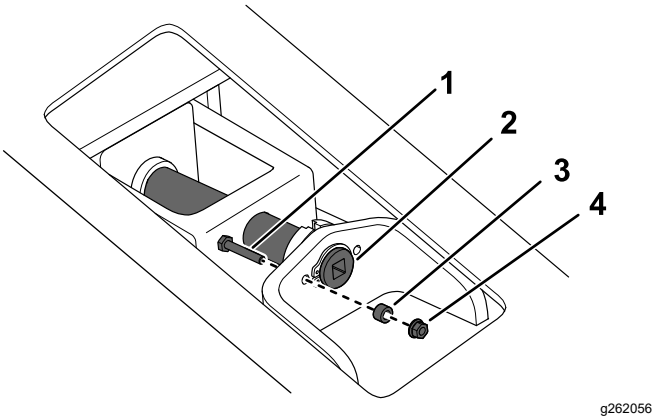

Figure 67

1. Locking bolt
2. Tensioning screw
3. Spacer
4. Nut

7. Using a 1/2 inch drive ratchet, turn the tensioning screw until the gap between the road wheel and track is 20 mm (0.79 inch) as shown in Figure 65.

   Note: Turning the screw counter-clockwise tightens the track; turning the screw clockwise loosens the track.
8. Align the notch in the tension screw to the nearest locking-bolt hole and secure the screw with the locking bolt, spacer, and nut (Figure 67.
9. Repeat the procedure for the other track if needed.

Replacing the Tracks

Removing the Tracks

1. Remove any attachments.
2. Park the machine on a level surface, ensuring that 1 segment of the sprocket is not engaged with the track.

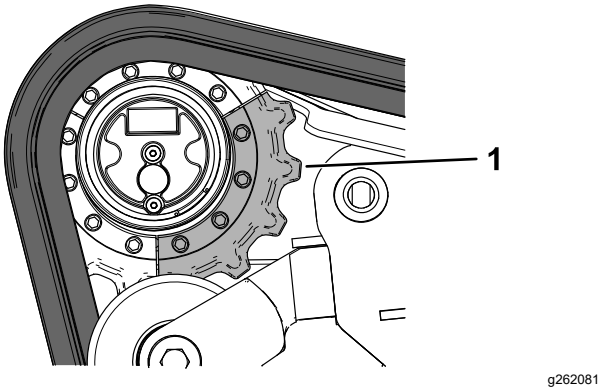

Figure 68

1. Sprocket segment

3. Lower the loader arms.
4. Shut off the engine and remove the key.
5. Raise the machine off the ground so that the bottom of the track is at least 10.2 cm (4 inches) off the ground. Support the machine using jack stands.

   Note: Use jack stands rated for your machine.

   ⚠ WARNING

   Mechanical or hydraulic jacks may fail to support the machine and cause serious injury.

   Use jack stands when supporting the machine.
6. Remove the locking bolt, spacer, and nut (Figure 67).
7. Using a 1/2-inch drive ratchet, release the drive tension by turning the tensioning screw clockwise (Figure 67 and Figure 69).

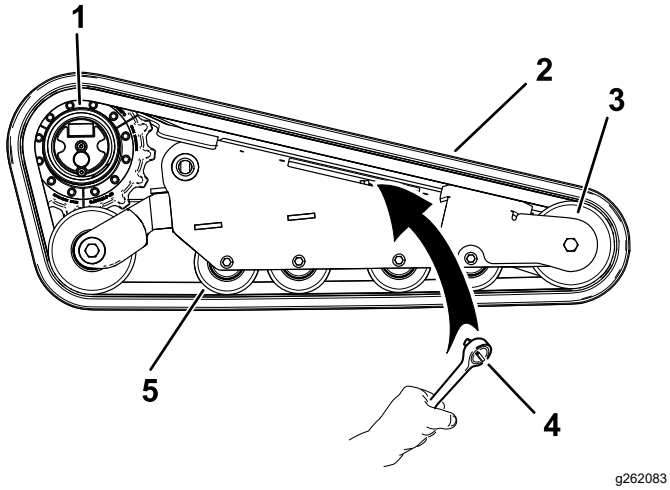

Figure 69

1. Sprocket
2. Track
3. Front wheel
4. Ratchet (1/2 inch)
5. Road wheel (4)

8. Remove the segment of the drive sprocket not engaged with the track.

   Important: **If you do not remove the sprocket segment, it may be difficult to install a new track without damaging it.**

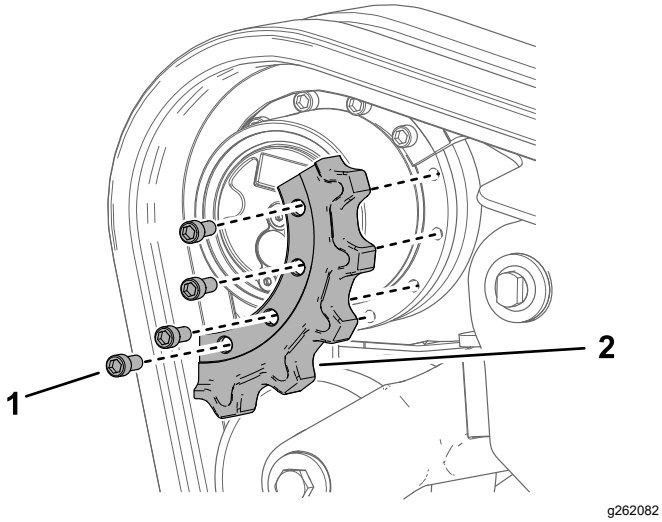

Figure 70

1. Screw (4)
2. Sprocket segment

9. Start the machine and disengage the parking brake.
10. Move the traction control forward until a second segment of the sprocket is not engaged with the track.
11. Shut off the engine and remove the key.
12. Remove the sprocket segment (Figure 70).
13. Start the machine and disengage the parking brake.
14. Move the traction control forward until the last segment of the sprocket is not engaged with the track.

    Note: You do not need to remove this segment.
15. Remove the track from the track frame.

Installing the Tracks

1. Wrap the new track around the front wheel (Figure 69).
2. Push the track under and between the road wheels and wrap it around the rear tension wheel (Figure 69).
3. Pry the track cleats onto the planetary housing.
4. Start the engine and disengage the parking brake.
5. Move the traction control forward until the drive sprocket segment engages with the track (Figure 71).

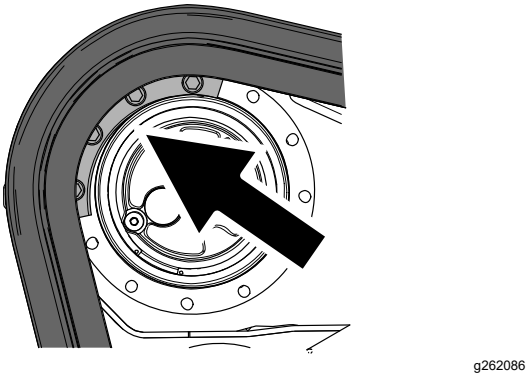

Figure 71

6. Shut off the engine and remove the key.
7. Apply thread-locking compound to the bolts of 1 drive sprocket segment that you removed and install the sprocket segment (Figure 70). Torque the bolts to 247 to 301 N·m (182 to 222 ft-lb).
8. Start the engine and disengage the parking brake.
9. Move the traction control forward until both drive sprocket segments engage the track.
10. Apply thread-locking compound to the bolts of the other drive sprocket segment that you removed and install the sprocket segment (Figure 71). Torque the bolts to 247 to 301 N·m (182 to 222 ft-lb).

    Note: Install the sprocket so that the casting numbers in the sprocket face outward.
11. Using a 1/2 inch drive ratchet, turn the tensioning screw counterclockwise until the gap between

the road wheel and track is 20 mm (0.79 inch) as shown in Figure 65.

12. Align the notch in the tension screw to the nearest locking-bolt hole and secure the screw with the locking bolt, spacer, and nut. Torque the locking bolt to 1,130 N·cm (100 in-lb).
13. Lower the machine to the ground.
14. Repeat the procedure to replace the other track.
15. Close the access cover and tighten the bolts (Figure 66). Torque the bolts to 41 N·m (30 ft-lb).

Cooling System Maintenance

Cooling System Safety

- Swallowing engine coolant can cause poisoning; keep out of reach from children and pets.
- Discharge of hot, pressurized coolant or touching a hot radiator and surrounding parts can cause severe burns.
  - Always allow the engine to cool at least 15 minutes before removing the radiator cap.
  - Use a rag when opening the radiator cap, and open the cap slowly to allow steam to escape.

Servicing the Cooling System

Service Interval: Before each use or daily—Clean the screen, oil cooler, and front of the radiator (more often in dirty or dusty conditions).

Before each use or daily—Check the coolant level in the expansion tank.

Every 100 hours—Check the cooling system hoses.

Cleaning the Radiator Screen

Service Interval: Before each use or daily

Remove any buildup of grass, dirt or other debris from the radiator screen with compressed air.

Checking the Engine-Coolant Level

The cooling system is filled with a 50/50 solution of water and permanent ethylene-glycol antifreeze.

1. Park the machine on a level surface, lower the loader arms, engage the parking brake, and shut off the engine.
2. Remove the key from the key switch and allow the engine to cool.
3. Open the hood.
4. Check the coolant level in the expansion tank (Figure 72).

   Note: The coolant level should be at or above the mark on the side of the tank.

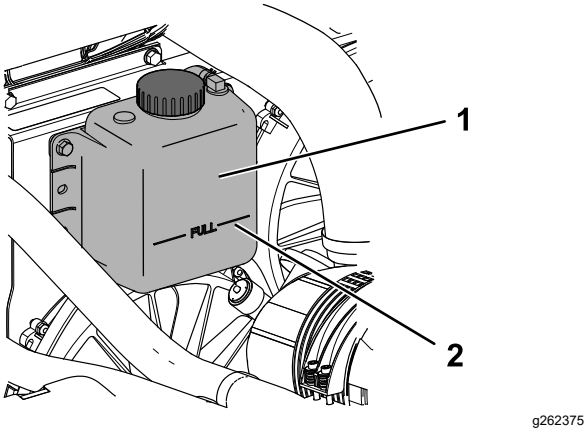

Figure 72

1. Expansion tank
2. Full mark

5. If the coolant level is low, remove the expansion tank cap and add a 50/50 mixture of water and permanent ethylene-glycol antifreeze.

   Important: **Do not overfill the expansion tank.**

6. Install the expansion-tank cap.

Changing the Engine Coolant

Service Interval: Every 800 hours

Have an Authorized Service Dealer change the engine coolant yearly.

If you need to add engine coolant, refer to Checking the Engine-Coolant Level (page 52).

Belt Maintenance

Checking and Adjusting the Alternator Belt Tension

Service Interval: Before each use or daily—Check the condition of the alternator belt.

Every 100 hours—Adjust the alternator belt tension.

1. Park the machine on a level surface, engage the parking brake, and lower the loader arms.
2. Shut off the engine and remove the key.
3. Open the hood.
4. Apply 30 N (22 in-lb) of force to the alternator belt, midway between the pulleys (Figure 73).

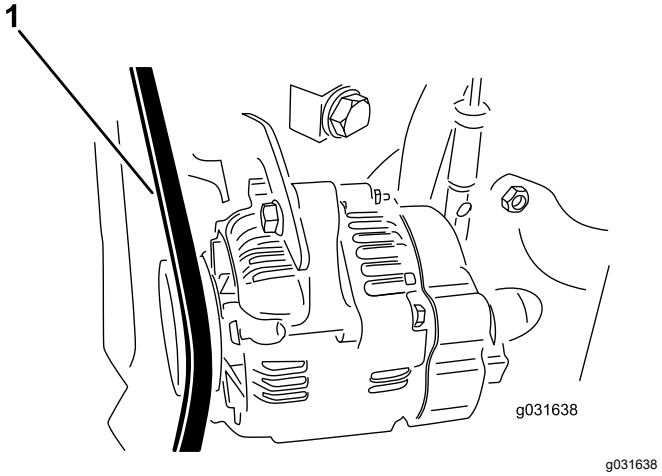

Figure 73

1. Alternator belt

5. If the belt does not deflect 11 mm (7/16 inch), complete the following procedure to tension the belt:
   A. Loosen the bolt securing the alternator to the engine and the bolt securing the brace to the alternator.
   B. Insert a pry bar between the alternator and engine, and pry out at the alternator.
   C. When you obtain the proper tension, tighten the alternator and brace bolts to secure the adjustment.

Controls System Maintenance

Adjusting the Controls

The factory adjusts the controls before shipping the machine. However, after many hours of use, you may need to adjust the traction control alignment, the NEUTRAL position of the traction control, and the tracking of the traction control in the full forward position.

Contact your Authorized Service Dealer to adjust the controls of your machine.

Hydraulic System Maintenance

Hydraulic System Safety

- Seek immediate medical attention if fluid is injected into skin. Injected fluid must be surgically removed within a few hours by a doctor.
- Ensure that all hydraulic-fluid hoses and lines are in good condition and all hydraulic connections and fittings are tight before applying pressure to the hydraulic system.
- Keep your body and hands away from pinhole leaks or nozzles that eject high-pressure hydraulic fluid.
- Use cardboard or paper to find hydraulic leaks.
- Safely relieve all pressure in the hydraulic system before performing any work on the hydraulic system.

Relieving Hydraulic Pressure

To relieve hydraulic pressure while the engine is on, disengage the auxiliary hydraulics and fully lower and retract the loader arms.

To relieve the pressure while the engine is off, cycle the joystick between the forward positions to lower the loader arms (Figure 74).

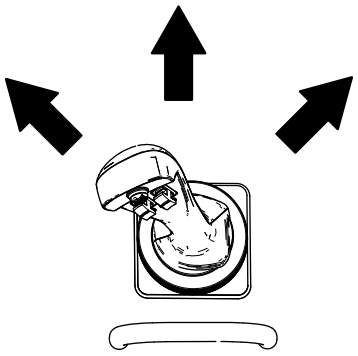

Figure 74

Hydraulic-Fluid Specifications

Every 400 hours—Replace the hydraulic oil and filters (if not using Toro fluid).

Every 1,000 hours—Replace the hydraulic oil and filters (if using Toro fluid).

Hydraulic-Tank Capacity: 57.7 L (15.25 US gallons)

Use only 1 of the following fluids in the hydraulic system:

- **Toro Premium Transmission/Hydraulic Tractor Fluid** (refer to your Authorized Service Dealer for more information)
- **Toro PX Extended Life Hydraulic Fluid** (refer to your Authorized Service Dealer for more information)
- If either of the above Toro fluids are not available, you may use another **Universal Tractor Hydraulic Fluid (UTHF**), but they must be only **conventional, petroleum-based** products. The specifications must fall within the listed range for all the following material properties and the fluid should meet the listed industry standards. Check with your hydraulic fluid supplier to determine if the fluid meets these specifications.

  Note: Toro will not assume responsibility for damage caused by improper substitutions, so use only products from reputable manufacturers who will stand behind their recommendations.

Material Properties	
Viscosity, ASTM D445	cSt at 40°C: 55 to 62
	cSt at 100°C: 9.1 to 9.8
Viscosity index, ASTM D2270	140 to 152
Pour Point, ASTM D97	-37 to -43°C (-35 to -46°F)
Industry Standards	
API GL-4, AGCO Powerfluid 821 XL, Ford New Holland FNHA-2-C-201.00, Kubota UDT, John Deere J20C, Vickers 35VQ25 and Volvo WB-101/BM	

Note: Many hydraulic fluids are almost colorless, making it difficult to spot leaks. A red dye additive for the hydraulic system fluid is available in 20 ml (2/3 fl oz) bottles. One bottle is sufficient for 15 to 22 L (4 to 6 US gallons) of hydraulic fluid. Order Part No. 44-2500 from your Authorized Toro Dealer.

Checking the Hydraulic-Fluid Level

Service Interval: Every 25 hours

Important: **Always use the correct hydraulic fluid. Unspecified fluids will damage the hydraulic system. Refer to Hydraulic-Fluid Specifications (page 55).**

1. Remove any attachments.
2. Park the machine on a level surface and engage the parking brake.
3. Raise the loader arms and install the cylinder lock.
4. Shut off the engine and remove the key.
5. Remove the front cover; refer to Removing the Front Cover (page 36).
6. Clean the area around the filler neck of the hydraulic tank.

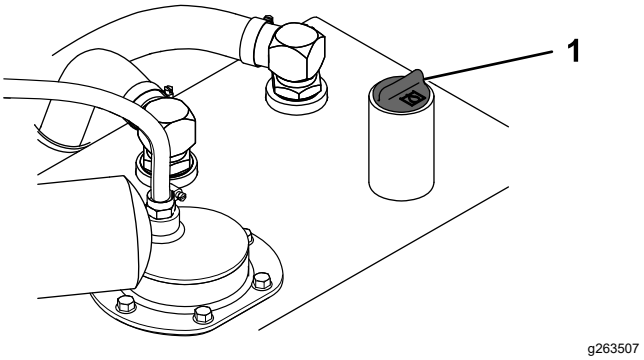

Figure 75

1. Filler-neck cap

7. Remove the filler-neck cap and check the fluid level on the dipstick.

   Note: The fluid level should be between the 2 notches of the dipstick while the arms are lowered or at the lower notch while the arms are raised.

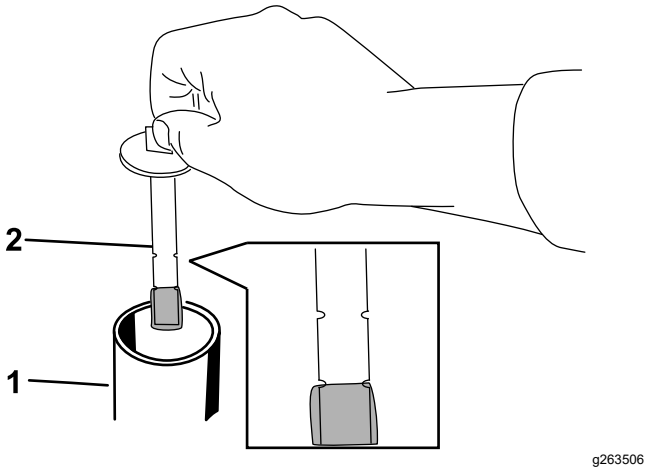

Figure 76

1. Filler neck
2. Dipstick

8. If the level is low, add enough fluid to raise it to the proper level.
9. Install the filler-neck cap.
10. Install the front cover.

Replacing the Hydraulic Filters

Important: **Do not substitute an automotive oil filter; otherwise, severe hydraulic system damage may occur.**

1. Park the machine on a level surface, engage the parking brake, and lower the loader arms.
2. Shut off the engine and remove the key.
3. Raise the loader arms and install the cylinder lock.
4. Remove the front cover; refer to Removing the Front Cover (page 36).
5. Place a drain pan under the front filter and replace the filter.

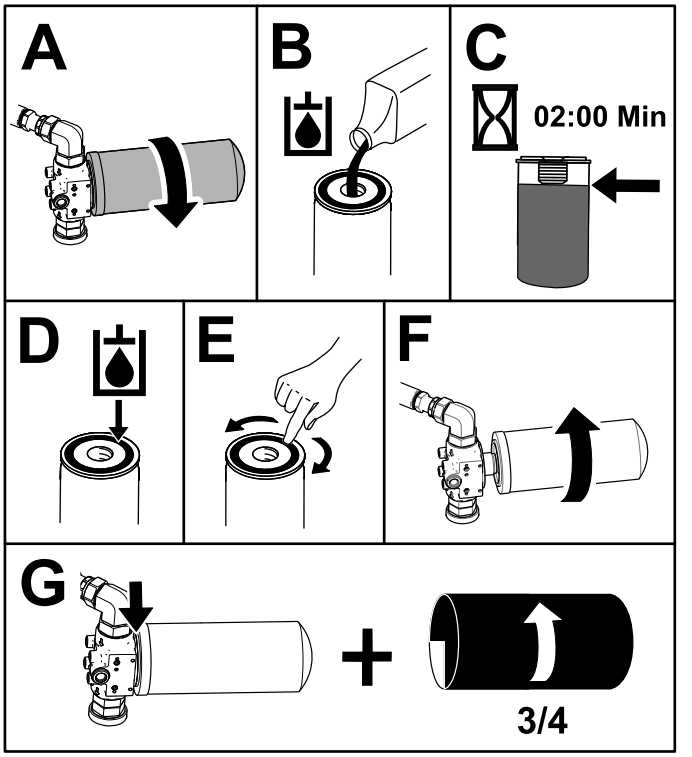

Figure 77

6. Clean up any spilled fluid.
7. Open the rear access cover; refer to Opening the Rear-Access Cover (page 35)
8. Remove the rear screen; refer to Removing the Rear Screen (page 36).
9. Place a drain pan under the rear filter and replace the filter.

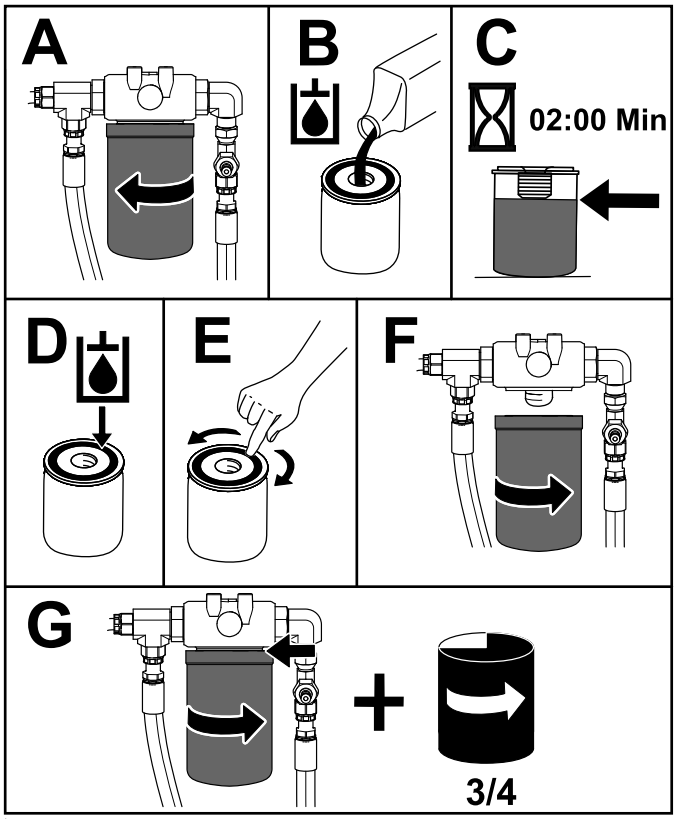

g263575

Figure 78

10. Clean up any spilled fluid.
11. Start the engine and let it run for about 2 minutes to purge air from the system.
12. Shut off the engine and check for leaks.
13. Check the fluid level in the hydraulic tank; refer to Checking the Hydraulic-Fluid Level (page 55) and add fluid to raise the level to mark on dipstick.

    Important: **Do not overfill the tank.**
14. Install the front cover.
15. Install the rear screen and tighten the knobs and bolts to secure it.
16. Close the rear-access cover and install the fastener to secure it.
17. Remove and store the cylinder lock and lower the loader arms.

Changing the Hydraulic Fluid

1. Park the machine on a level surface.
2. Raise the loader arms and install the cylinder lock.
3. Shut off the engine, remove the key, and allow the engine to cool.
4. Remove the front cover; refer to Removing the Front Cover (page 36).
5. Remove the hydraulic-tank cap and dipstick.

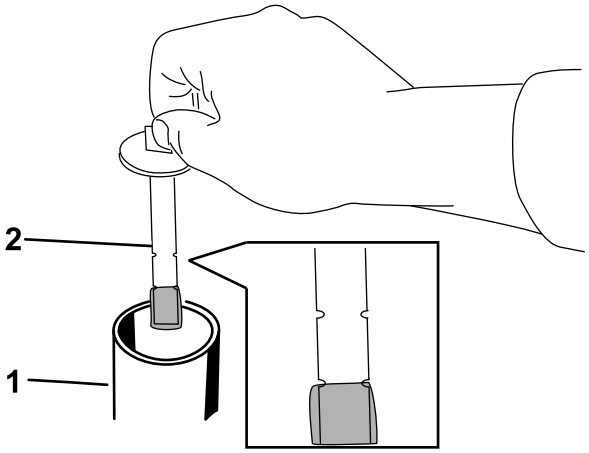

g263506

Figure 79

1. Filler neck
2. Dipstick

6. Place a large drain pain capable of holding 57 L (15 US gallons) under the drain plug on the front of the machine.

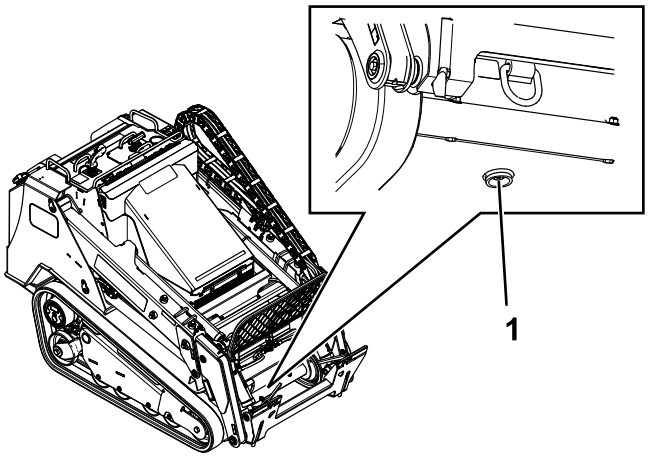

g617046

Figure 80

1. Drain plug

7. Remove the drain plug and allow the oil to drain into the pan.

8. When the oil is finished draining, install and tighten the drain plug.

   Note: Dispose of the used oil at a certified recycling center.

9. Fill the hydraulic tank with hydraulic fluid; refer to Hydraulic-Fluid Specifications (page 55).
10. Start the engine and let it run for a few minutes.
11. Shut off the engine and remove the key.
12. Check the hydraulic-fluid level and add fluid to fill the tank if necessary; refer to Checking the Hydraulic-Fluid Level (page 55).
13. Install the front cover.

Loader Maintenance

Torquing the Loader Arm Adjustment Screws

Telescoping Machines Only

Service Interval: Every 25 hours

Check the torque whenever the lower loader arms rattle.

1. Park the machine on a level surface.
2. Shut off the engine, remove the key, and allow the engine to cool.
3. On each loader arm, loosen the setscrew on the 4 adjustment screws (Figure 81).

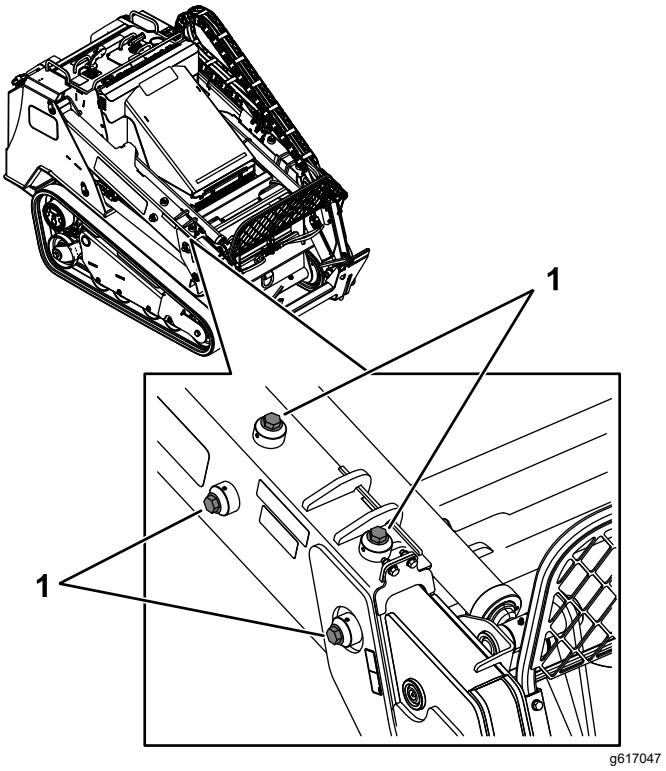

Figure 81

1. Adjustment screw

4. Torque the adjustment screws to 27 N·m (20 ft-lb).
5. Check that the length of the adjustment screws that is protruding from the arms is equal side to side.
6. Apply medium-strength thread-locking compound to the setscrews and tighten them until they just contact the adjustment screws.

   Important: **Do not overtighten the setscrews; otherwise you may damage the adjustment screw threads.**

Cleaning

Removing Debris

Service Interval: Before each use or daily

Important: **Operating the engine with blocked screens and/or cooling shrouds removed will result in engine damage from overheating.**

1. Park the machine on a level surface and lower the loader arms.
2. Shut off the engine, remove the key, and allow the engine to cool.
3. Open the hood and secure the prop rod.
4. Clean any debris from the front and side screens.
5. Wipe away debris from the air cleaner.
6. Clean any debris buildup on the engine and in the oil cooler fins with a brush or blower.

   Important: **Operating the engine with blocked screens and/or cooling shrouds removed will result in engine damage due to overheating.**
7. Clean debris from the hood opening, muffler, heat shields, and radiator screen (if applicable).
8. Close the hood.

Cleaning the Chassis

Service Interval: Every 100 hours—Check for dirt buildup in the chassis.

Over time, the chassis under the engine collects dirt and debris that must be removed. Using a flashlight, open the hood and inspect the area under the engine regularly. When the debris is 2.5 to 5 cm (1 to 2 inches) deep, clean the chassis.

1. Park the machine on a level surface and lower the loader arms.
2. Raise the front of the machine so that the machine is angled backward.
3. Shut off the engine and remove the key.
4. Remove the bottom plate; refer to Removing the Bottom Plate (page 36).
5. Remove the front cover assembly; refer to Removing the Front Cover Assembly (page 36).
6. Spray water into the chassis to clean out the dirt and debris.

   Note: The water will drain at the back of the machine.

   Important: **Do not spray water into the engine.**
7. Grease the machine; refer to Lubricating the Machine (page 37).
8. Install the bottom plate (Figure 39).
9. Install the front cover assembly.
10. Lower the machine.

Storage

Storage Safety

- Shut off the engine, remove the key, wait for all moving parts to stop, and allow the machine to cool before storing it.
- Do not store the machine or fuel near flames.

Storage

1. Park the machine on a level surface, engage the parking brake, and lower the loader arms.
2. Shut off the engine and remove the key.
3. Remove dirt and grime from the entire machine.

   Important: **You can wash the machine with mild detergent and water. Do not pressure-wash the machine. Avoid excessive use of water, especially near the control panel, engine, hydraulic pumps, and motors.**
4. Service the air cleaner; refer to Servicing the Air Cleaner (page 38).
5. Grease the machine; refer to Lubricating the Machine (page 37).
6. Change the engine oil; refer to Servicing the Engine Oil (page 39).
7. Charge the battery; refer to Charging the Battery (page 44).
8. Check and adjust the track tension; refer to Servicing the Tracks (page 49).
9. Check and tighten all fasteners. Repair or replace any worn, damaged, or missing parts.
10. Paint all scratched or bare metal surfaces with paint available from your Authorized Service Dealer.
11. Store the machine in a clean, dry garage or storage area. Remove the key from the ignition switch and keep it in a memorable place.
12. Cover the machine to protect it and keep it clean.

Decommissioning the Machine

Before decommissioning the machine, follow local regulations for disposing of hazardous substances. For more information on draining fluids, see the Maintenance chapter or contact your Authorized Service Dealer.

Troubleshooting

Problem	Possible Cause	Corrective Action
The engine does not start.	1. Dirt, water, stale fuel, or incorrect fuel is in the fuel system. 2. The fuel filter is clogged. 3. The improper fuel grade for cold weather is in the machine. 4. The battery is discharged.	1. Drain and flush the fuel system; add fresh fuel. 2. Replace the fuel filter. 3. Drain the fuel system and replace the fuel filter. Add fresh fuel of proper grade for ambient temperature conditions. You may need to warm the entire traction unit. 4. Charge the battery or replace it.
The engine loses power.	1. The fuel tank is empty. 2. There is air in the fuel. 3. The engine is overheating. 4. The engine load is excessive. 5. The crankcase-oil level is incorrect. 6. The air-cleaner filters are dirty.	1. Fill the tank with fresh fuel. 2. Bleed the fuel system and check for air leaks at fuel hose connections and fittings between the fuel tank and engine. 3. Refer to “The engine overheats.” 4. Reduce the load; use a lower ground speed. 5. Fill or drain to the Full mark. 6. Service the air filters.
The engine starts but does not keep running.	1. The fuel tank is empty. 2. There is air in the fuel. 3. The engine is overheating. 4. The air-cleaner filters are dirty.	1. Fill the tank with fresh fuel. 2. Bleed the fuel system and check for air leaks at fuel hose connections and fittings between the fuel tank and engine. 3. Refer to “The engine overheats.” 4. Service the air filters.
The engine overheats.	1. The crankcase-oil level is incorrect. 2. The alternator belt is broken or elongated. 3. More coolant is needed. 4. Concentration of antifreeze is too high. 5. There is restricted air flow to the radiator. 6. The inside of the radiator is corroded. 7. The radiator or radiator cap is damaged. 8. The thermostat is defective. 9. The temperature gauge or sensor is defective. 10. The engine load is excessive. 11. The head gasket is damaged or there is water leakage.	1. Fill or drain to the Full mark. 2. Replace the belt or adjust the belt tension. 3. Check and add coolant. 4. Add water only or change to coolant with the specified mixing ratio. 5. Inspect and clean the radiator screen. 6. Clean or replace the radiator and parts. 7. Replace the damaged parts. 8. Check the thermostat and replace it if necessary. 9. Check the temperature with a thermometer and replace the gauge or sensor if necessary. 10. Reduce the load; use a lower ground speed. 11. Replace damaged parts.

Problem	Possible Cause	Corrective Action
The machine does not drive.	1. The parking brake is engaged.	1. Disengage the parking brake.
	2. The hydraulic-fluid level is low.	2. Add hydraulic fluid to the reservoir.
	3. The hydraulic system is damaged.	3. Contact your Authorized Service Dealer.
	4. The bypass valves are open.	4. Close the bypass valves.
	5. A traction pump drive coupler is loose or broken.	5. Contact your Authorized Service Dealer.
	6. Pump and/or wheel motor is damaged.	6. Contact your Authorized Service Dealer.
	7. The control valve is damaged.	7. Contact your Authorized Service Dealer.
	8. The relief valve is damaged.	8. Contact your Authorized Service Dealer.
	9. The cooling fans are damaged or disconnected.	9. Check fan connections or replace damaged parts.

Notes:

California Proposition 65 Warning Information

What is this warning?

You may see a product for sale that has a warning label like the following:

WARNING: Cancer and Reproductive Harm—www.p65Warnings.ca.gov.

What is Prop 65?

Prop 65 applies to any company operating in California, selling products in California, or manufacturing products that may be sold in or brought into California. It mandates that the Governor of California maintain and publish a list of chemicals known to cause cancer, birth defects, and/or other reproductive harm. The list, which is updated annually, includes hundreds of chemicals found in many everyday items. The purpose of Prop 65 is to inform the public about exposure to these chemicals.

Prop 65 does not ban the sale of products containing these chemicals but instead requires warnings on any product, product packaging, or literature with the product. Moreover, a Prop 65 warning does not mean that a product is in violation of any product safety standards or requirements. In fact, the California government has clarified that a Prop 65 warning "is not the same as a regulatory decision that a product is 'safe' or 'unsafe.'" Many of these chemicals have been used in everyday products for years without documented harm. For more information, go to https://oag.ca.gov/prop65/faqs-view-all.

A Prop 65 warning means that a company has either (1) evaluated the exposure and has concluded that it exceeds the "no significant risk level"; or (2) has chosen to provide a warning based on its understanding about the presence of a listed chemical without attempting to evaluate the exposure.

Does this law apply everywhere?

Prop 65 warnings are required under California law only. These warnings are seen throughout California in a wide range of settings, including but not limited to restaurants, grocery stores, hotels, schools, and hospitals, and on a wide variety of products. Additionally, some online and mail order retailers provide Prop 65 warnings on their websites or in catalogs.

How do the California warnings compare to federal limits?

Prop 65 standards are often more stringent than federal and international standards. There are various substances that require a Prop 65 warning at levels that are far lower than federal action limits. For example, the Prop 65 standard for warnings for lead is 0.5 µg/day, which is well below the federal and international standards.

Why don't all similar products carry the warning?

- Products sold in California require Prop 65 labelling while similar products sold elsewhere do not.
- A company involved in a Prop 65 lawsuit reaching a settlement may be required to use Prop 65 warnings for its products, but other companies making similar products may have no such requirement.
- The enforcement of Prop 65 is inconsistent.
- Companies may elect not to provide warnings because they conclude that they are not required to do so under Prop 65; a lack of warnings for a product does not mean that the product is free of listed chemicals at similar levels.

Why does Toro include this warning?

Toro has chosen to provide consumers with as much information as possible so that they can make informed decisions about the products they buy and use. Toro provides warnings in certain cases based on its knowledge of the presence of one or more listed chemicals without evaluating the level of exposure, as not all the listed chemicals provide exposure limit requirements. While the exposure from Toro products may be negligible or well within the "no significant risk" range, out of an abundance of caution, Toro has elected to provide the Prop 65 warnings. Moreover, if Toro does not provide these warnings, it could be sued by the State of California or by private parties seeking to enforce Prop 65 and subject to substantial penalties.