Form No. 3484-840 Rev A

Count on it.

Operator's Manual

TX 1000 Turbo Compact Tool Carrier

Model No. 22587—Serial No. 422200000 and Up
Model No. 22587G—Serial No. 422200000 and Up
Model No. 22588—Serial No. 422200000 and Up
Model No. 22588HD—Serial No. 418300000 and Up
Model No. 22588LE—Serial No. 422200000 and Up

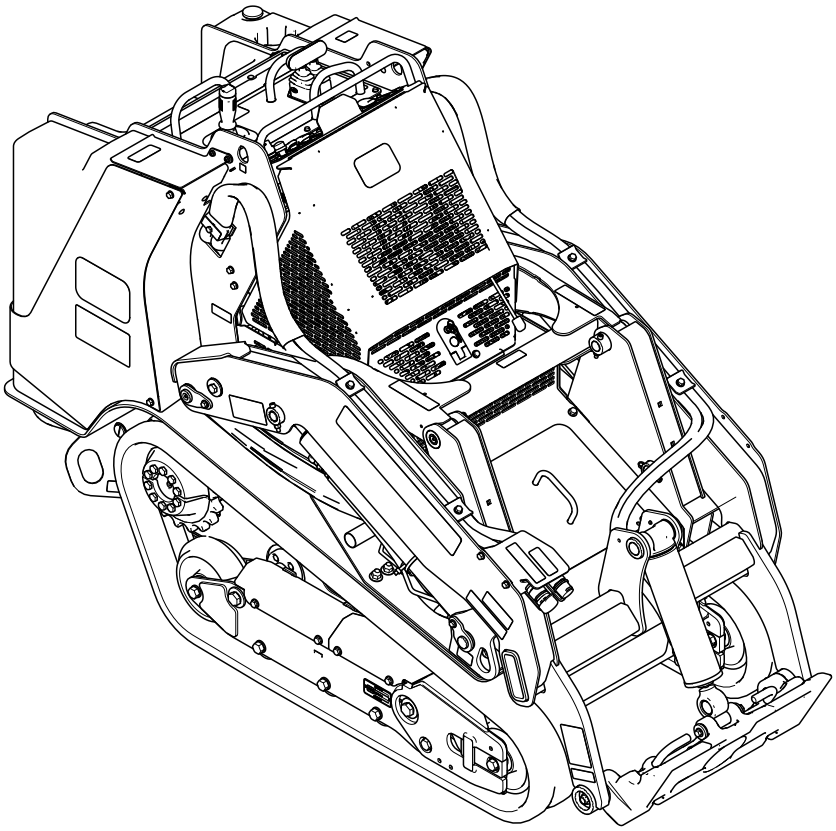

Register at www.Toro.com.
Original Instructions (EN)

3484-840

It is a violation of California Public Resource Code Section 4442 or 4443 to use or operate the engine on any forest-covered, brush-covered, or grass-covered land unless the engine is equipped with a spark arrester, as defined in Section 4442, maintained in effective working order or the engine is constructed, equipped, and maintained for the prevention of fire.

The enclosed engine owner's manual is supplied for information regarding the US Environmental Protection Agency (EPA) and the California Emission Control Regulation of emission systems, maintenance, and warranty. Replacements may be ordered through the engine manufacturer.

⚠ WARNING

CALIFORNIA
Proposition 65 Warning

Diesel engine exhaust and some of its constituents are known to the State of California to cause cancer, birth defects, and other reproductive harm.

Battery posts, terminals, and related accessories contain lead and lead compounds, chemicals known to the State of California to cause cancer and reproductive harm. Wash hands after handling.

Use of this product may cause exposure to chemicals known to the State of California to cause cancer, birth defects, or other reproductive harm.

Introduction

This machine is a compact tool carrier intended for use in various earth and materials moving activities for landscaping and construction work. It is designed to operate a wide variety of attachments, each of which perform a specialized function. Using this product for purposes other than its intended use could prove dangerous to you and bystanders. Do not modify the machine or attachments.

This machine should be operated, serviced, and repaired only by professionals familiar with its characteristics and acquainted with the relevant safety procedures.

Operate this machine in ambient temperatures from -18 to 38°C (0 to 100 °F). Contact your Authorized Service Dealer for provisions required for operating in extreme temperatures.

Read this information carefully to learn how to operate and maintain your product properly and to avoid injury and product damage. You are responsible for operating the product properly and safely.

Visit www.Toro.com for product safety and operation training materials, accessory information, help finding a dealer, or to register your product.

Whenever you need service, genuine Toro parts, or additional information, contact an Authorized Service Dealer or Toro Customer Service and have the model and serial numbers of your product ready. Figure 1 identifies the location of the model and serial numbers on the product. Write the numbers in the space provided.

Important: **With your mobile device, you can scan the QR code on the serial number decal (if equipped) to access warranty, parts, and other product information.**

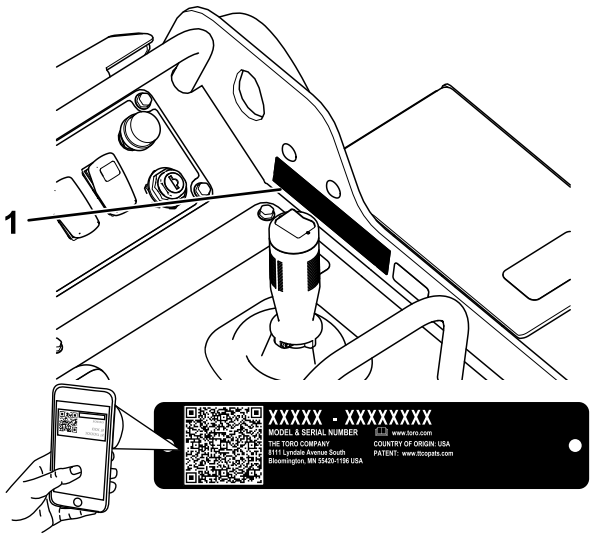

g616610

Figure 1

1. Model and serial number location

Model No. _____

Serial No. _____

This manual identifies potential hazards and has safety messages identified by the safety-alert symbol (Figure 12), which signals a hazard that may cause serious injury or death if you do not follow the recommended precautions.

© 2026—The Toro® Company
8111 Lyndale Avenue South
Bloomington, MN 55420

Contact us at www.Toro.com.
Printed in the USA
All Rights Reserved

g000502

Figure 2
Safety-alert symbol

The safety-alert symbol appears above information that alerts you to unsafe actions or situations and is followed by the word **DANGER**, **WARNING**, or **CAUTION**.

DANGER indicates an imminently hazardous situation which, if not avoided, **will** result in death or serious injury.

WARNING indicates a potentially hazardous situation which, if not avoided, **could** result in death or serious injury.

CAUTION indicates a potentially hazardous situation which, if not avoided, **may** result in minor or moderate injury.

This manual uses two other words to highlight information. **Important** calls attention to special mechanical information and **Note** emphasizes general information worthy of special attention.

Contents

Safety 4
General Safety 4
Safety and Instructional Decals 5
Product Overview 11
Controls 11
InfoCenter Display 14
Specifications 16
Attachments/Accessories 17
Before Operation 17
Before Operation Safety 17
Adding Fuel 18
Performing Daily Maintenance 19
During Operation 19
During Operation Safety 19
Starting the Engine 21
Starting the Engine in Cold Weather 21
Driving the Machine 21
Adjusting the Maximum Traction Speed 21
Shutting Off the Engine 22
Using Attachments 22
Understanding Smart Power® Traction 24
After Operation 25
After Operation Safety 25
Retrieving a Stuck Machine 25
Moving a Non-Functioning Machine 25
Hauling the Machine 25
Lifting the Machine 27
Maintenance 28
Maintenance Safety 28
Recommended Maintenance Schedule(s) 28
Pre-Maintenance Procedures 30
Using the Cylinder Lock 30
Accessing Internal Components 30
Lubrication 34
Greasing the Machine 34
Engine Maintenance 34
Engine Safety 34
Servicing the Air-Cleaner 34
Servicing the Engine Oil 36
Fuel System Maintenance 38
Draining the Water Separator 38
Replacing the Water Separator Filter 38
Checking the Fuel Lines and Connections 39
Replacing the In-Line Fuel Filter 39
Bleeding the Fuel System 39
Draining the Fuel Tank(s) 39
Electrical System Maintenance 40
Electrical System Safety 40
Servicing the Battery 40
Jump-Starting the Machine 42
Servicing the Fuses 44
Drive System Maintenance 45
Servicing the Tracks 45
Cooling System Maintenance 48
Cooling System Safety 48
Servicing the Cooling System 48
Controls System Maintenance 49
Adjusting the Controls 49
Hydraulic System Maintenance 50
Hydraulic System Safety 50
Relieving Hydraulic Pressure 50
Hydraulic Fluid Specifications 50
Checking the Hydraulic-Fluid Level 51
Replacing the Hydraulic Filter 52
Changing the Hydraulic Fluid 52
Cleaning 53
Removing Debris 53
Washing the Machine 53
Cleaning the Chassis 53
Storage 54
Storage Safety 54
Storage 54
Troubleshooting 55

Safety

General Safety

⚠ WARNING

There may be buried utility lines in the work area. Digging into them could cause a shock or an explosion, resulting in death or serious injury.

Have the property or work area marked for buried lines and do not dig in marked areas. Contact your local marking service or utility company to have the property marked (for example, in the US, call 811 or in Australia, call 1100 for the nationwide marking service).

Always follow all safety instructions to avoid serious injury or death.

- Do not exceed the rated operating capacity, as the machine may become unstable, which may result in loss of control.
- Do not carry a load with the arms raised; always carry loads close to the ground.
- Slopes are a major factor related to loss-of-control and tip-over accidents, which can result in severe injury or death. **Operating the machine on any slope or uneven terrain requires extra caution.**
- **Operate the machine up and down slopes with the heavy end of the machine uphill and the load close to the ground.** Weight distribution changes with attachments. An empty bucket makes the rear of the machine the heavy end, and a full bucket makes the front of the machine the heavy end. Most other attachments make the front of the machine the heavy end.
- Have the property or work area marked for buried lines and other objects, and do not dig in marked areas.
- Read and understand the content of this *Operator's Manual* before starting the engine.
- Use your full attention while operating the machine. Do not engage in any activity that causes distractions; otherwise, injury or property damage may occur.
- Never allow children or untrained people to operate the machine.
- Keep your hands and feet away from the moving components and attachments.
- Do not operate the machine without the guards and other safety protective devices in place and working on the machine.
- Keep bystanders and children out of the operating area.
- Stop the machine, shut off the engine, and remove the key before servicing, fueling, or unclogging the machine.

Improperly using or maintaining this machine can result in injury. To reduce the potential for injury, comply with these safety instructions and always pay attention to the safety-alert symbol ⚠, which means Caution, Warning, or Danger—personal safety instruction. Failure to comply with these instructions may result in personal injury or death.

Safety and Instructional Decals

Safety decals and instructions are easily visible to the operator and are located near any area of potential danger. Replace any decal that is damaged or missing.

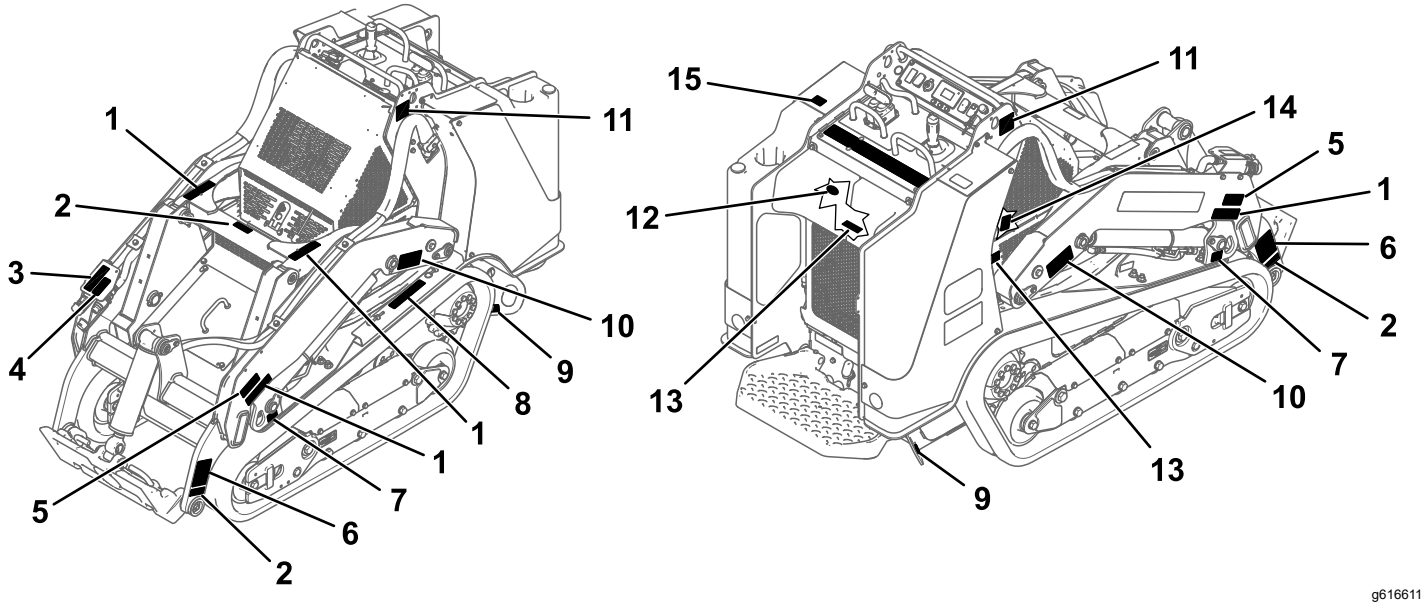

Figure 3

Safety decal locations

1. 139-1158	5. 139-1159	9. 132-9051	13. 127-0392
2. 120-0625	6. 145-3252	10. 131-0711	14. 147-6709 (inside machine)
3. 115-4855	7. 147-6707	11. 125-4967	15. 163-5287
4. 139-1173	8. 115-4858	12. 106-6755 (inside machine)	

Battery Symbols

Some or all of these symbols are on your battery.

1. Explosion hazard
2. No fire, open flame, or smoking
3. Caustic liquid/chemical burn hazard
4. Wear eye protection.
5. Read the *Operator's Manual*.
6. Keep bystanders away from the battery.
7. Wear eye protection; explosive gases can cause blindness and other injuries.
8. Battery acid can cause blindness or severe burns.
9. Flush eyes immediately with water and get medical help fast.
10. Contains lead; do not discard

decal106-6755

106-6755

1. Engine coolant under pressure.
2. Explosion hazard—read the *Operator's Manual.*
3. Warning—do not touch the hot surface.
4. Warning—read the *Operator's Manual.*

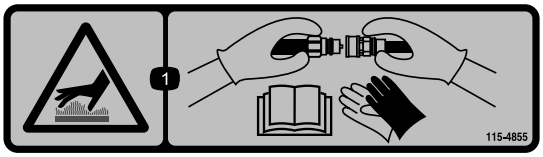

decal115-4855

115-4855

1. Hot surface/burn hazard—wear protective gloves when handling the hydraulic couplers and read the *Operator's Manual* for information on handling hydraulic components.

---

decal115-4858

115-4858

1. Crushing hazard of hands or feet—install the cylinder lock.

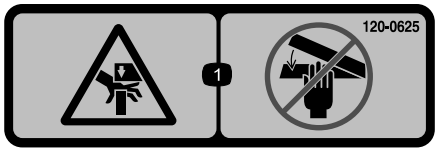

decal120-0625

120-0625

1. Pinch point, hand—keep hands away.

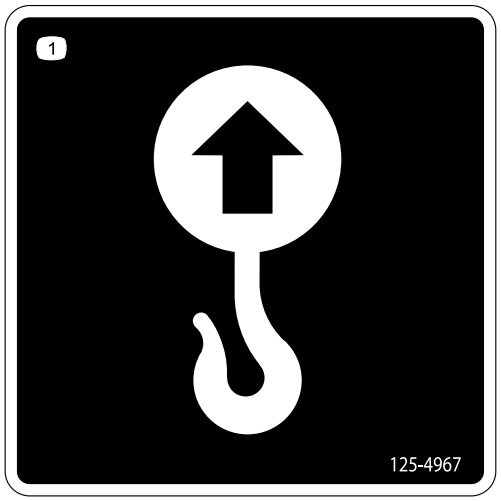

decal125-4967

125-4967

1. Lift point

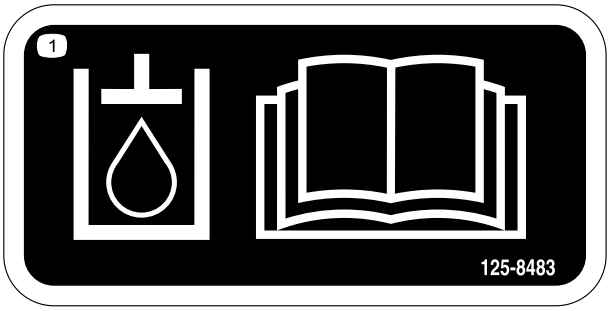

decal125-8483

125-8483

1. Hydraulic fluid; read the *Operator's Manual*.

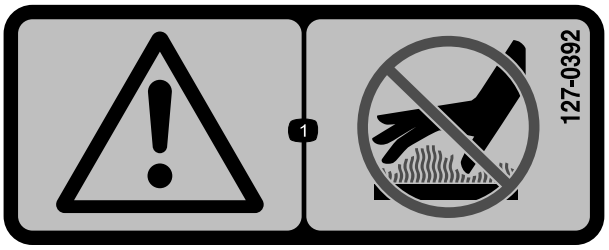

decal127-0392

127-0392

1. Warning—stay away from hot surfaces.

---

decal131-0709

131-0709

1. Parking brake—engage
2. Parking brake—disengage

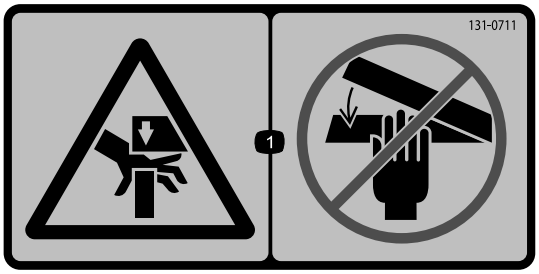

decal131-0711

131-0711

1. Crushing hazard—keep away from pinch points and actuating parts.

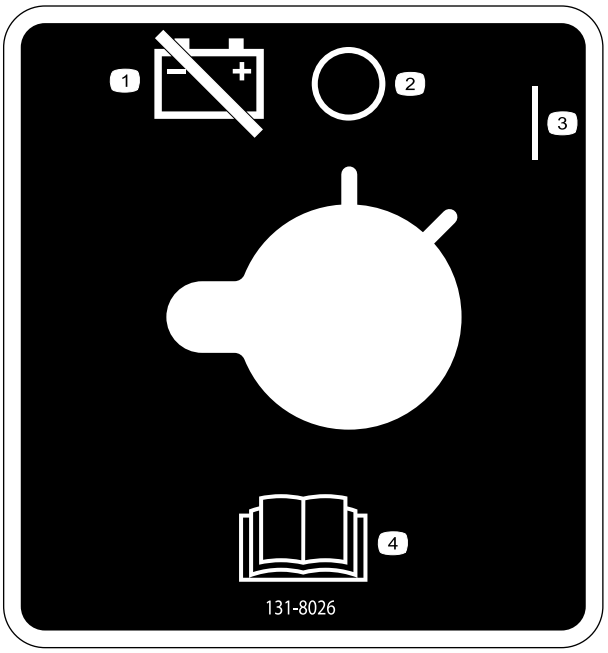

decal131-8026

131-8026

1. Battery power—disconnect
2. Off
3. On
4. Read the *Operator's Manual*.

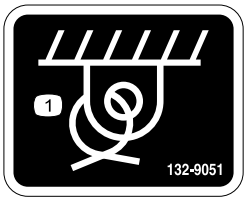

decal132-9051

132-9051

1. Tie-down point

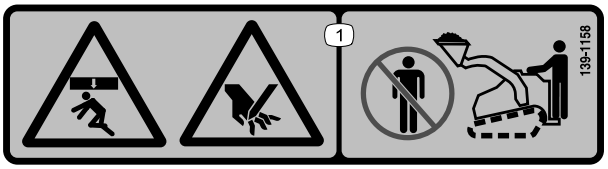

decal139-1158

139-1158

1. Crushing hazard, from above, and pinching hazard—stay away from the bucket and loading arms.

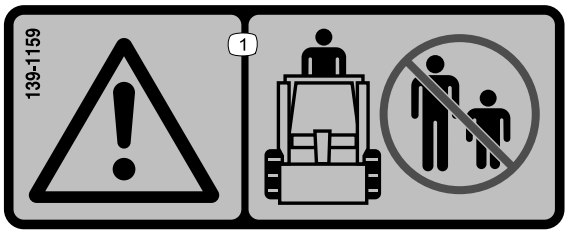

decal139-1159

139-1159

1. Warning—keep bystanders away.

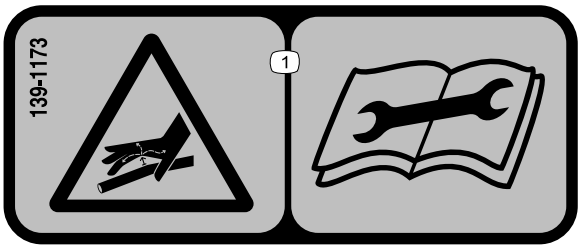

decal139-1173

139-1173

1. High-pressure fluid hazard, injection into the body—read the *Operator's Manual* before performing maintenance.

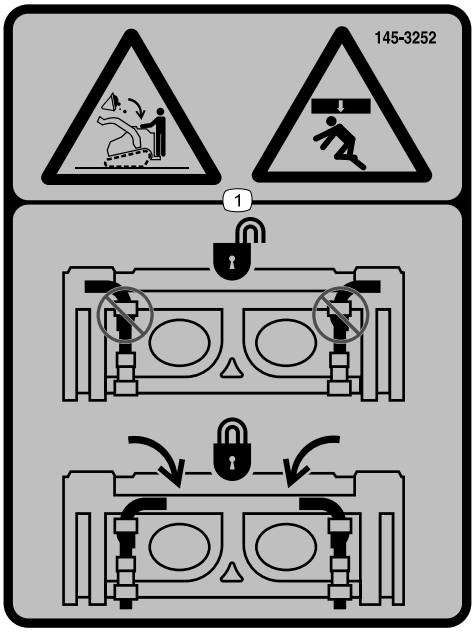

decal145-3252

145-3252

1. Crushing hazard from above, falling load—ensure that the quick-attach pins are locked.

---

decal147-0287

147-0287

1. Torque to 2.82 to 3.16 N·m (25 to 28 in-lb).

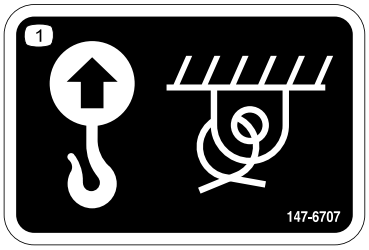

decal147-6707

147-6707

1. Lift point and tie-down point

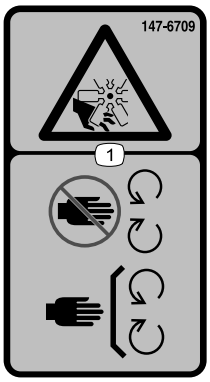

decal147-6709

147-6709

1. Cutting/dismemberment hazard of hands, fan—stay away from moving parts; keep all guards and shields in place.

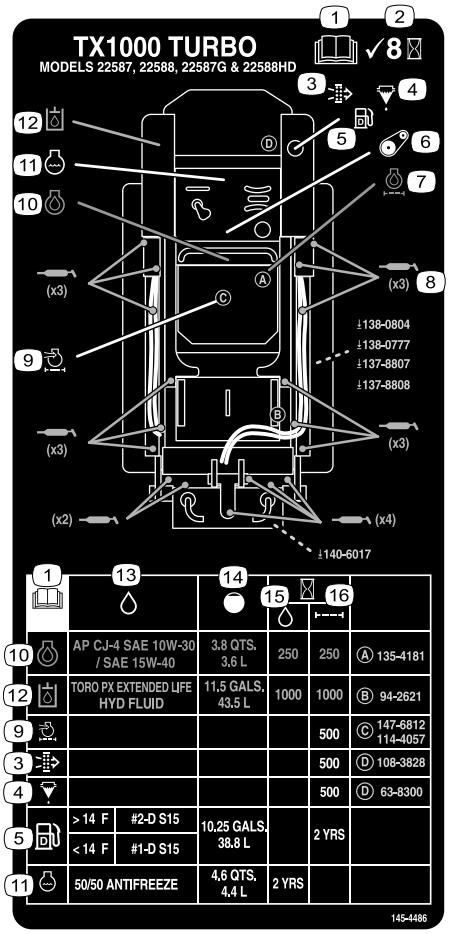

decal145-4486

145-4486

1. Read the *Operator's Manual*.
2. Check every 8 hours.
3. Safety air filter
4. Fuel/water separator
5. Diesel fuel
6. Belt
7. Engine oil filter
8. Grease points
9. Engine air filter
10. Engine oil
11. Engine coolant
12. Hydraulic fluid
13. Fluids
14. Capacity
15. Fluid interval (hours)
16. Filter interval (hours)

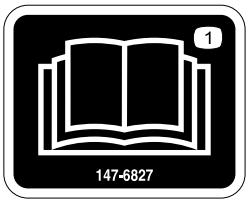

decal147-6827

147-6827

1. Read the *Operator's Manual*.

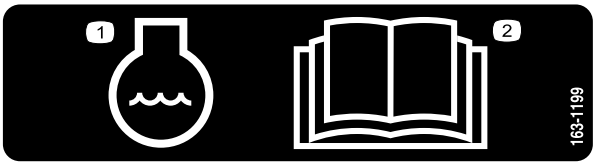

decal163-1199

163-1199

1. Engine coolant
2. Read the *Operator's Manual*.

decal163-5287

163-5287

1. Explosion hazard—shut off the engine; do not expose to fire or open flame.

decal163-1201

163-1201

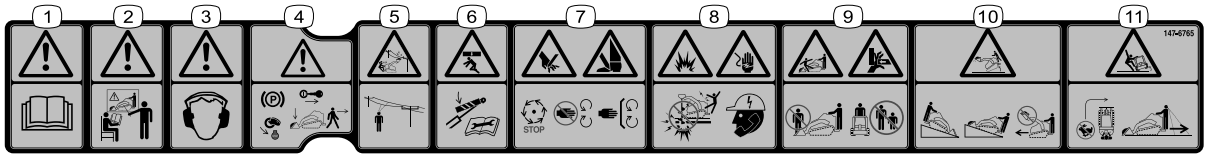

decal147-6765

147-6765

1. Warning—read the *Operator's Manual*.
2. Warning—all operators should be trained before operating the machine.
3. Warning—wear hearing protection.
4. Warning—engage the parking brake, lower the attachment, shut off the engine, and remove the key before leaving the machine.
5. Electrical shock hazard, overhead power lines—watch for overhead power lines.
6. Crushing hazard, from above—install the cylinder lock(s) before performing maintenance.
7. Cutting hazard of hands or feet—wait for all moving parts to stop before servicing; stay away from moving parts; keep all guards and shields in place.
8. Explosion hazard; electrical shock hazard—do not dig in areas with buried gas or electrical lines; call your local utility company.
9. Falling hazard; crushing hazard of hands—do not lift or carry a person with the attachments; keep bystanders away.
10. Tipping hazard—always move up or down slopes with the attachment lowered; never drive on a slope with the attachment raised; always operate with the heavy end uphill; do not drive the machine with the load raised.
11. Tipping hazard—do not make fast turns; look behind and down when moving in reverse.

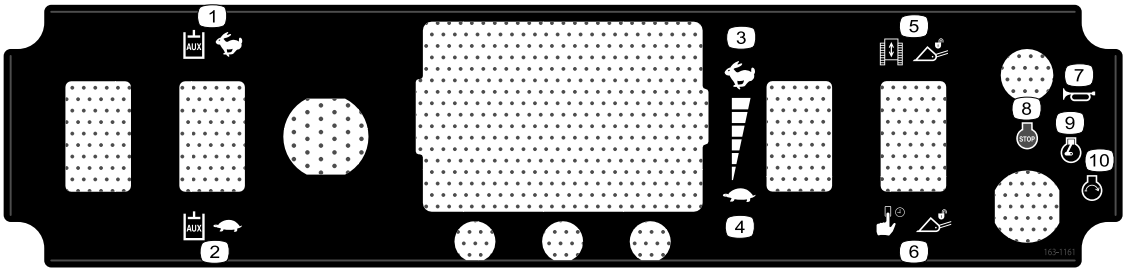

decal163-1161

163-1161

1. Auxiliary hydraulics—Slow
2. Auxiliary hydraulics—Fast
3. Fast
4. Slow
5. Traction and loader controls—Enable
6. Loader controls—Press and continuously hold to enable
7. Horn
8. Engine—Shut off
9. Engine—Run
10. Engine—Start

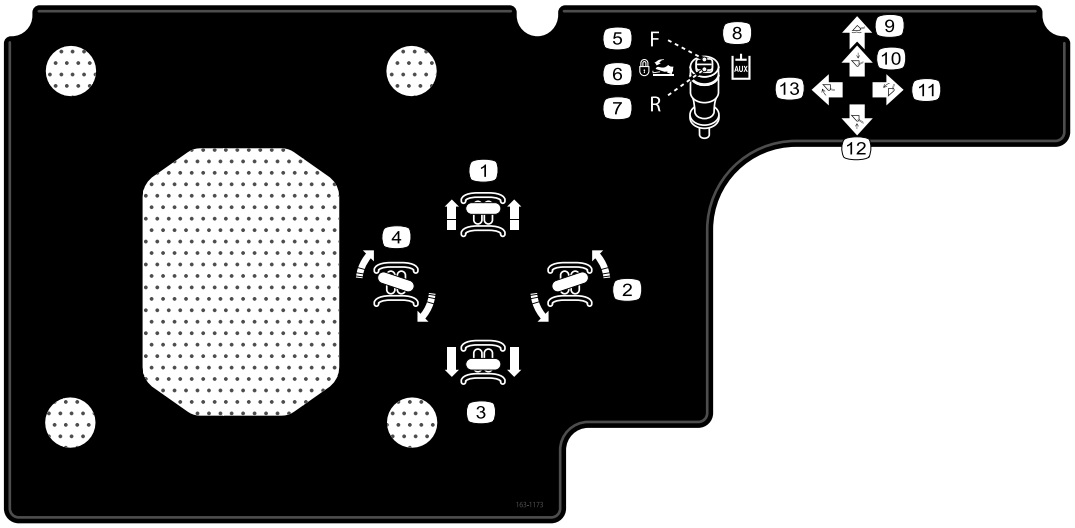

decal163-1173

163-1173

1. Move forward
2. Turn left
3. Move rearward
4. Turn right
5. Hydraulic attachment—forward
6. Hydraulic attachment—lock
7. Hydraulic attachment—reverse
8. Auxiliary attachment—neutral
9. Float the attachment
10. Lower the attachment
11. Tilt the attachment forward
12. Raise the attachment
13. Tilt the attachment rearward

Product Overview

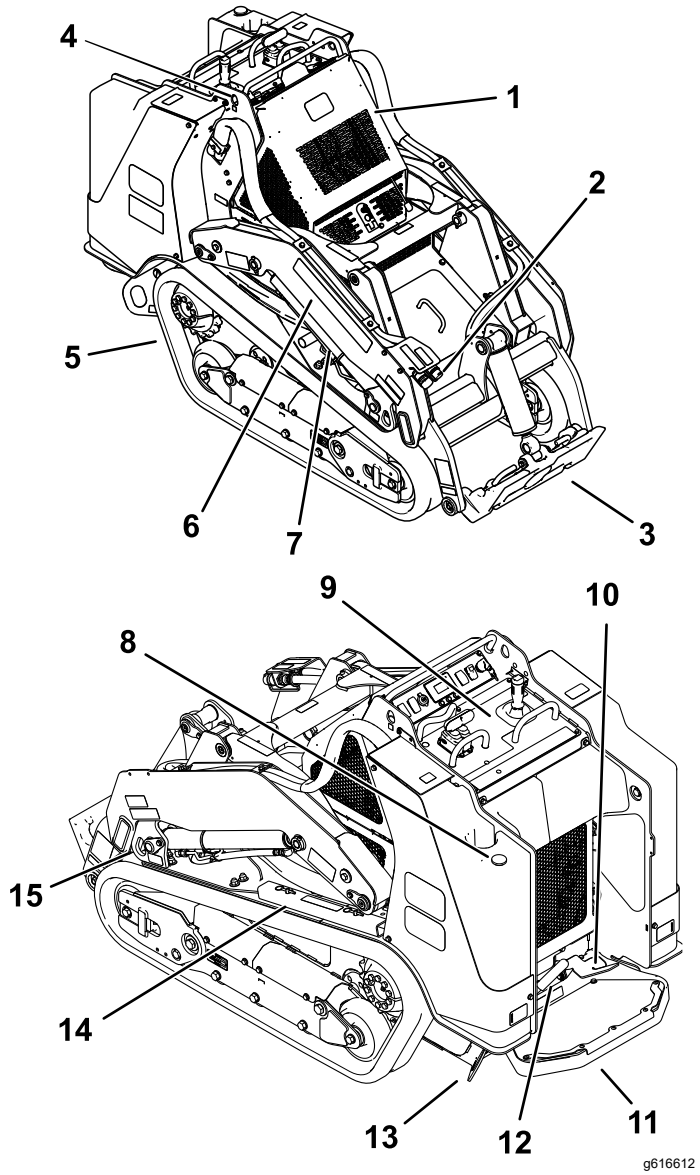

Figure 4

1. Hood
2. Auxiliary hydraulic couplers
3. Mount plate
4. Lift point
5. Track
6. Loader arm
7. Lift cylinder
8. Fuel gauge
9. Control panel
10. Auxiliary-hydraulics lock pedal
11. Operator platform
12. Parking brake
13. Tie-down point
14. Cylinder lock
15. Tie-down/lift point

Controls

Become familiar with all the controls (Figure 5) before you start the engine and operate the traction unit.

Control Panel

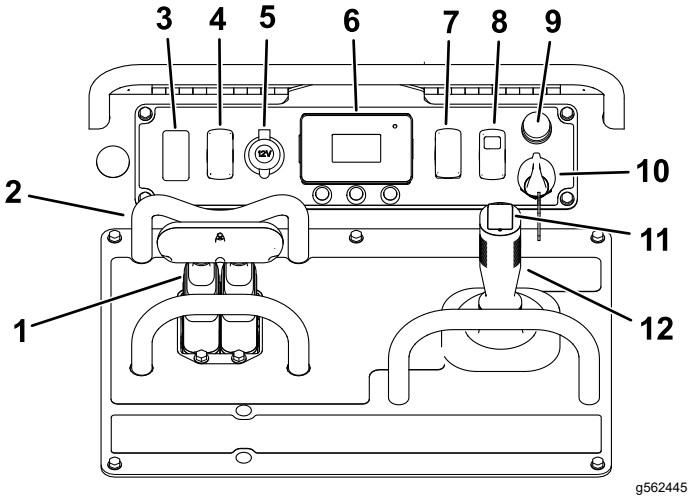

Figure 5

1. Traction control
2. Reference bar
3. Plug
4. Auxiliary hydraulic flow speed
5. Power socket
6. Message display
7. Throttle switch
8. Machine-enable switch
9. Horn
10. Key switch
11. Auxiliary hydraulics control
12. Loader-arm/attachment-tilt lever

Key Switch

The key switch, used to start and shut off the engine, has 3 positions: OFF, RUN, and START. Refer to Starting the Engine (page 21).

Throttle Switch

Hold the switch forward for 2 or more seconds to set the throttle at HIGH IDLE; hold the switch rearward for 2 or more seconds to set the throttle at LOW IDLE; or momentarily press the switch in either direction to increase or decrease the engine speed in smaller increments.

Reference Bar

When driving the traction unit, use the reference bar as a handle and a leverage point for controlling the traction control and the auxiliary-hydraulics lever. To ensure smooth, controlled operation, do not take your hands off the reference bars while operating the machine.

Traction Control

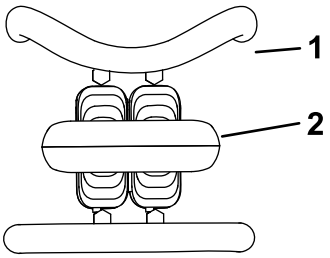

g259646

Figure 6

1. Reference bar
2. Traction control

- To move forward, move the traction control forward (Figure 7).

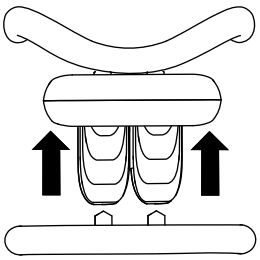

g259645

Figure 7

- To move rearward, move the traction control rearward (Figure 8).

  Important: **When reversing, look behind you for obstructions and keep your hands on the reference bar.**

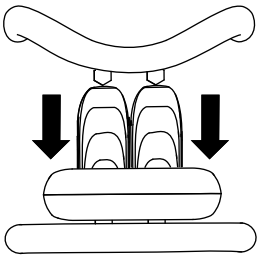

g259647

Figure 8

- To turn right, rotate the traction control clockwise (Figure 9).

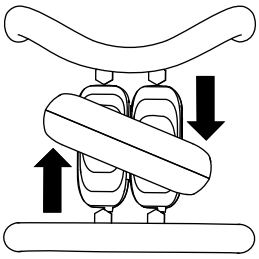

g259649

Figure 9

- To turn left, rotate the traction control counterclockwise (Figure 10).

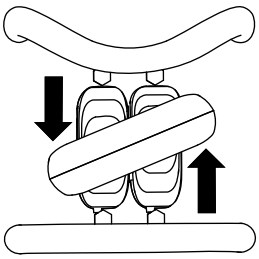

g259648

Figure 10

- To stop the machine, release the traction control (Figure 6).

Note: The farther you move the traction control in any direction, the faster the machine moves in that direction.

Machine-Enable Switch

The traction and loader-arm controls are automatically disabled when starting the machine and after the parking brake is engaged. Use this switch to enable the traction and loader-arm controls.

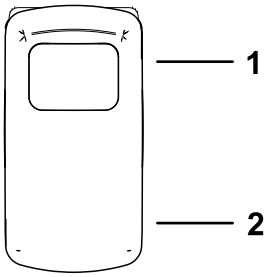

g530256

Figure 11

1. Enable the traction and loader-arm controls.
2. Press and continuously hold to enable the loader-arm controls only.

Loader Arm/Attachment-Tilt Lever

Slowly move the lever to operate the loader arms and tilt the attachment.

Note: The detent (float) position allows attachments such as the leveler and the hydraulic blade to follow the contours of the ground (i.e., float) when grading.

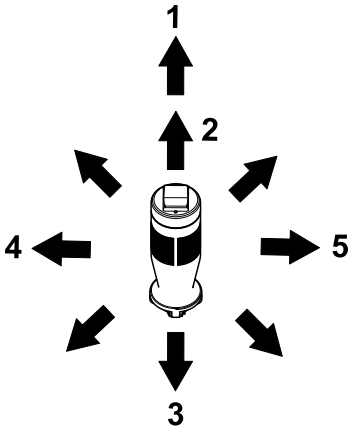

g530560

Figure 12

1. Detent (float) position—push the lever fully forward.
2. Lower the loader arms.
3. Raise the loader arms.
4. Tilt the attachment rearward.
5. Tilt the attachment forward.

By moving the lever to an intermediate position (e.g., forward and left), you can move the loader arms and tilt the attachment at the same time.

Loader-Control-Reference Bar

The loader-control-reference bar helps stabilize your hand while operating the loader arm/attachment-tilt lever (Figure 5).

Auxiliary-Hydraulics Controls

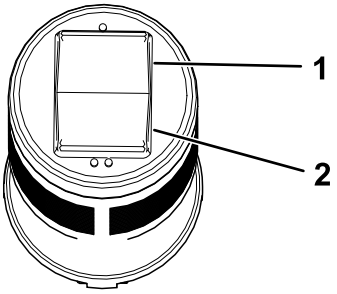

g530559

Figure 13

1. Operate auxiliary hydraulics in the forward direction.
2. Operate auxiliary hydraulics in the reverse direction.

Auxiliary-Hydraulics Lock Pedal

After engaging the auxiliary hydraulics for at least 1 second, use your right foot to press the auxiliary-hydraulics lock pedal to continue the forward or reverse flow of the hydraulics and free your hand for other controls.

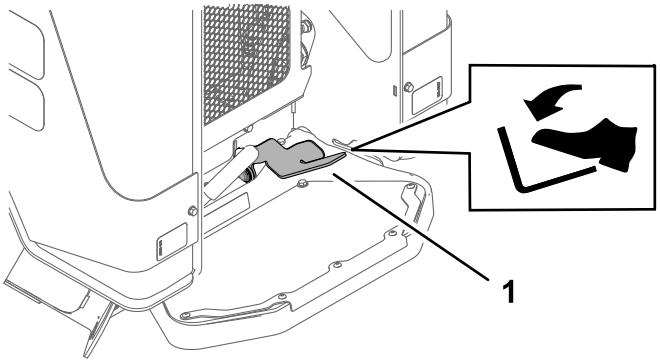

g422824

Figure 14

1. Auxiliary-hydraulics lock pedal

Parking-Brake Lever

- To engage the parking brake, rotate the lever to left (Figure 15).

  Note: The traction unit may roll slightly before the brakes engage in the drive sprocket.

- To release the brake, rotate the brake lever to the right.

  Note: You may need to adjust the traction control to release the brake pins and rotate the lever.

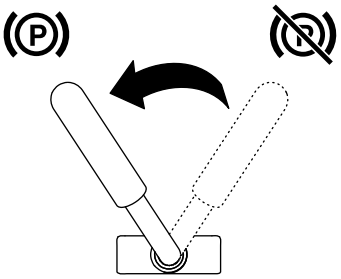

G030721

g030721

Figure 15

Fuel Gauge

This gauge measures the amount of fuel in the fuel tank(s).

InfoCenter Display

The InfoCenter LCD display shows information about your machine, such as the operating status, various diagnostics and other information about the machine. There is a splash screen and main information screen of the InfoCenter. You can switch between the splash screen and main information screen at any time by pressing any of the InfoCenter buttons and then selecting the appropriate directional arrow.

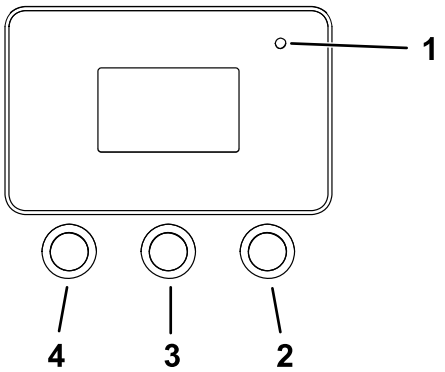

g264015

Figure 16

1. Indicator light
2. Right button
3. Middle button
4. Left button

- Left Button, Menu Access/Back Button—press this button to access the InfoCenter menus. You can use it to exit any menu that you are currently using.
- Middle Button—use this button to scroll down menus.
- Right Button—use this button to open a menu where a right arrow indicates additional content.

Note: The purpose of each button may change depending on what is required at the time. Each button is labeled with an icon displaying its current function.

InfoCenter Icon Descriptions

	Menu access
	Next
	Previous
	Scroll down
	Enter
	Change the next value in the list
	Increase

InfoCenter Icon Descriptions (cont'd.)

	Decrease
	Save value
	Exit menu
	Accept
	The option is locked.
	Hour meter
	Adjust digit
	Warning
	Transport-speed screen access
	Fast
	Slow
AUX	Auxiliary lock
	High engine idle disabled
	Auxiliary hydraulics disabled
	Cold start
P	Parking brake
	Engine
	Glow plugs
	Engine-coolant temperature

InfoCenter Icon Descriptions (cont'd.)

n/min	Engine speed
	Battery voltage
	Indicates when scheduled service should be performed
SMART POWER	Smart Power is active; refer to Understanding Smart Power® Traction (page 24).

Using the Menus

To access the InfoCenter menu system, press the menu access button i while at the main screen. This will bring you to the main menu. Refer to the following tables for a synopsis of the options available from the menus:

Main Menu

Menu Item	Description
Faults	The Faults menu contains a list of the recent machine and engine faults. Refer to the *Service Manual* or your Authorized Service Dealer for more information on the Faults menu and the information contained there.
Service	The Service menu contains information on the machine such as hours of use and other similar numbers.
Diagnostics	The Diagnostics menu displays the state of each machine switch, sensor and control output. You can use this to troubleshoot certain issues as it will quickly tell you which machine controls are on and which are off.
Settings	The Settings menu allows you to customize and modify configuration variables on the InfoCenter display.
About	The About menu lists the model number, serial number, and software version of your machine.

Service

Menu Item	Description
Hours	Lists the total number of hours that the machine, engine, and auxiliary hydraulics have been on, as well as the number of hours for engine service and hydraulic service.
Counts	Lists the number of starts that the machine has experienced, the number of times the machine has warned that the engine temperature is too high, and the number of times the engine has shut off due to high temperatures.

Diagnostics

Menu Item	Description
Traction	Indicates the inputs and outputs for driving the machine.
Auxiliary	Indicates the inputs and outputs for engaging auxiliary hydraulics.
Engine	Indicates the inputs and outputs for starting the engine.

Settings

Menu Item	Description
Units	Controls the units used on the InfoCenter; the menu choices are Imperial or Metric.
Language	Controls the language used on the InfoCenter.
Brightness	Controls the brightness of the LCD display.
Contrast	Controls the contrast of the LCD display.
Protected Menus	Grants access to protected menus.
Protect Settings	Changes whether a pin is required in Protected Menus.

About

Menu Item	Description
Model	Lists the model number of the machine
Serial	Lists the serial number of the machine
Software	Lists the system software revision of the machine.
Display	Lists the display software revision of the InfoCenter.

Accessing Protected Menus

Note: The factory default PIN code for you machine is either 0000 or 1234.

If you changed the PIN code and forgot the code, contact your Authorized Service Dealer for assistance.

1. From the MAIN MENU, scroll down to the SETTINGS MENU and press the right button.

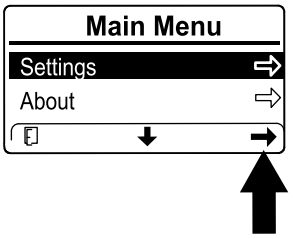

g364600

Figure 17

2. In the SETTINGS MENU, scroll down to the PROTECTED MENU and press the right button.

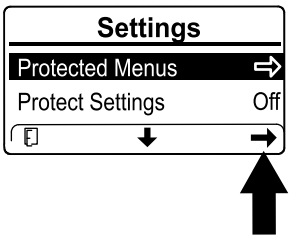

g364601

Figure 18

3. To enter the PIN code, press the center button until the correct first digit appears, then press the right button to move on to the next digit. Repeat this step until the last digit is entered and press the right button once more.

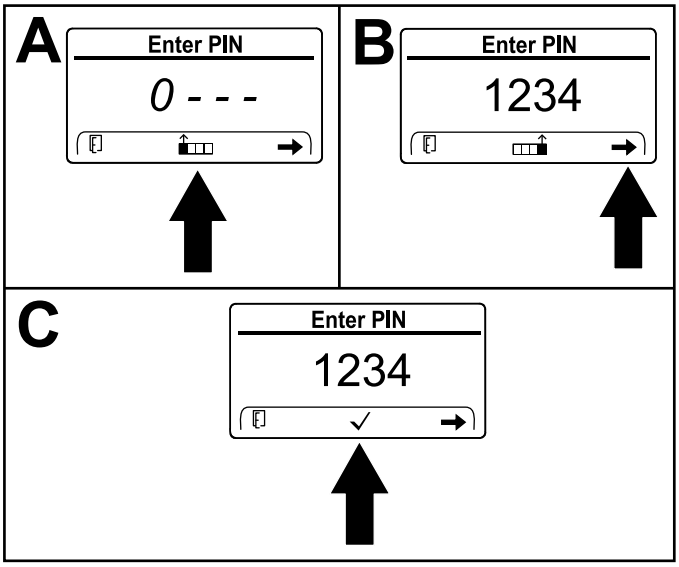

g364599

Figure 19

4. Press the middle button to confirm the PIN code.

   Note: If the InfoCenter accepts the PIN code and the protected menu is unlocked, the word "PIN" displays in the upper right corner of the screen.

You can view and change the settings in the PROTECTED MENU. Once you access the PROTECTED MENU, scroll down to PROTECT SETTINGS option. Use the right button to change the setting. Setting the Protect Settings to OFF allows you to view and change the settings in the PROTECTED MENU without entering the PIN code. Setting the Protect Settings to ON hides the protected options and requires you to enter the PIN code to change the setting in the PROTECTED MENU.

Specifications

Note: Specifications and design are subject to change without notice.

Model 22587, 22587G

Width	89 cm (35 inches)
Length	211 cm (83 inches)
Height	140 cm (55 inches)
Weight	1320 kg (2,911 lb)
Rated operating capacity[1]	454 kg (1,000 lb)
Wheelbase	99 cm (39 inches)
Dump height (with standard bucket)	152 cm (60 inches)
Reach—fully raised (with standard bucket)	89 cm (35 inches)
Height to hinge pin (with standard bucket in highest position)	206 cm (81 inches)

Model 22588, 22588HD

Width	102 cm (40 inches)
Length	211 cm (83 inches)
Height	140 cm (55 inches)
Weight	1282 kg (2,826 lb)
Rated operating capacity[1]	454 kg (1,000 lb)
Wheelbase	99 cm (39 inches)
Dump height (with standard bucket)	152 cm (60 inches)
Reach—fully raised (with standard bucket)	89 cm (35 inches)
Height to hinge pin (with standard bucket in highest position)	206 cm (81 inches)

1. The rated operating capacity is calculated with a standard bucket and 75 kg (165 lb) operator, per ISO 14397-1. Other attachments will have different operating capacities; refer to the Operator's Manual or load capacity decal for the attachment.

Attachments/Accessories

A selection of Toro-manufactured attachments and accessories is available for use with the machine to enhance and expand its capabilities. Contact your Authorized Service Dealer or authorized Toro distributor or go to www.Toro.com for a list of all Toro-manufactured attachments and accessories.

To ensure optimum performance, use genuine Toro replacement parts and accessories. Toro accepts no liability for machine damage or personal injury that results from the use of other manufacturer attachments. The user accepts the burden of these risks.

Operation

Before Operation

Before Operation Safety

General Safety

- Never allow children or untrained people to operate or service the machine. Local regulations may restrict the age or require certified training of the operator. The owner is responsible for training all operators and mechanics.
- Become familiar with the safe operation of the equipment, operator controls, and safety decals.
- Always engage the parking brake (if equipped), shut off the engine, remove the key, wait for all moving parts to stop, and allow the machine to cool before adjusting, servicing, cleaning, or storing the machine.
- Know how to stop the machine and shut off the engine quickly.
- Check that the operator's presence controls, safety switches, and shields are attached and functioning properly. Do not operate the machine unless they are functioning properly.
- Locate the pinch-point areas marked on the machine and attachments; keep your hands and feet away from these areas.
- Before operating the machine with an attachment, ensure that the attachment is properly installed and that it is a genuine Toro attachment. Read all the attachment manuals.
- Evaluate the terrain to determine what accessories and attachments you need to properly and safely perform the job.
- Have the property or work area marked for buried lines and other objects, and do not dig in marked areas; note the location of unmarked objects and structures, such as underground storage tanks, wells, and septic systems.
- Inspect the area where you will use the equipment for uneven surfaces or hidden hazards.
- Ensure that the area is clear of bystanders before operating the machine. Stop the machine if anyone enters the area.

Fuel Safety

- Use extreme care when handling fuel. It is flammable and its vapors are explosive.
- Extinguish all cigarettes, cigars, pipes, and other sources of ignition.
- Use only an approved fuel container.
- Do not remove the fuel cap or fill the fuel tank while the engine is running or hot.
- Do not add or drain fuel in an enclosed space.
- Do not store the machine or fuel container where there is an open flame, spark, or pilot light, such as on a water heater or other appliance.
- If you spill fuel, do not attempt to start the engine; avoid creating any source of ignition until the fuel vapors have dissipated.
- To prevent a static charge from igniting the fuel, remove the machine from the truck or trailer and refuel it on the ground, away from all vehicles. If this is not possible, place a portable fuel container on the ground, away from all vehicles, and fill it; then refuel the machine from the fuel container rather than from a fuel-dispenser nozzle.
- Keep the fuel-dispenser nozzle in contact with the rim of the fuel tank or container opening at all times until fueling is complete. Do not use a nozzle lock-open device.

Adding Fuel

Recommended Fuel

Use only clean, fresh diesel fuel or biodiesel fuels with low (<500 ppm) or ultra low (<15 ppm) sulfur content. The minimum cetane rating should be 40. Purchase fuel in quantities that you can use within 180 days to ensure fuel freshness.

Use summer-grade diesel fuel (No. 2-D) at temperatures above -7°C (20°F) and winter grade (No. 1-D or No. 1-D/2-D blend) below that temperature. Using winter-grade fuel at lower temperatures provides lower flash point and cold flow characteristics, which eases starting and reduces fuel filter plugging.

Using summer-grade fuel above -7°C (20°F) contributes toward longer fuel pump life and increased power compared to winter-grade fuel.

Important: **Do not use kerosene or gasoline instead of diesel fuel. Failure to observe this caution will damage the engine.**

Biodiesel Ready

This machine can also use a biodiesel blended fuel of up to B20 (20% biodiesel, 80% petrodiesel). The petrodiesel portion should be low or ultra low sulfur. Observe the following precautions:

- The biodiesel portion of the fuel must meet specification ASTM D6751 or EN14214.
- The blended fuel composition should meet ASTM D975 or EN590.
- Painted surfaces may be damaged by biodiesel blends.
- Use B5 (biodiesel content of 5%) or lesser blends in cold weather.
- Monitor seals, hoses, gaskets in contact with fuel as they may degrade over time.
- Fuel filter plugging may occur for a time after converting to biodiesel blends.
- Contact your distributor for more information on biodiesel.

Filling the Fuel Tank

Fuel tank capacity: 38.8 L (10.25 US gallons)

1. Park the machine on a level surface, lower the loader arms, and engage the parking brake.
2. Shut off the engine and remove the key.
3. Raise the bracket.

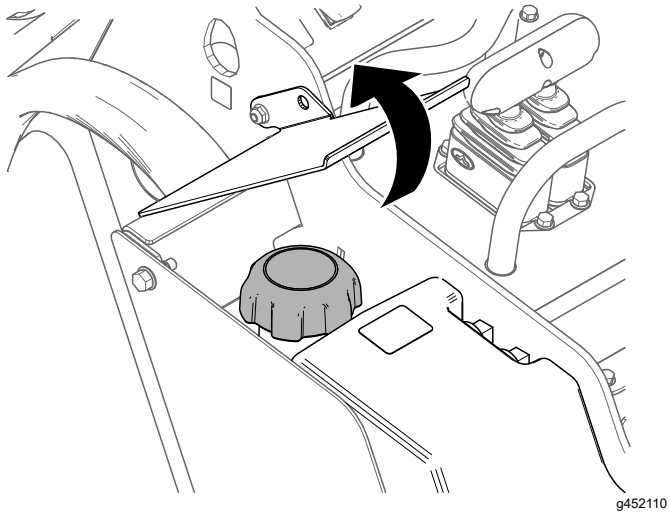

Figure 20

4. Remove the fuel cap.
5. Fill the tank with fuel up to the filler neck.
6. Install the cap.
7. Lower the bracket.

Performing Daily Maintenance

Before starting the machine each day, perform the Each Use/Daily procedures listed in Maintenance (page 28).

Important: **Check the hydraulic-fluid level and bleed the fuel system before starting the engine for the first time; refer to Checking the Hydraulic-Fluid Level (page 51) and Bleeding the Fuel System (page 39).**

During Operation

During Operation Safety

General Safety

- Do not exceed the rated operating capacity, as the machine may become unstable, which may result in loss of control.
- Do not carry a load with the arms raised. Always carry loads close to the ground.
- Use only Toro-approved attachments and accessories. Attachments can change the stability and the operating characteristics of the machine.
- For machines with a platform:
  - Lower the loader arms before stepping off the platform.
  - Do not try to stabilize the machine by putting your foot on the ground. If you lose control of the machine, step off the platform and away from the machine.
  - Do not place your feet under the platform.
  - Do not move the machine unless you are standing with both feet on the platform and your hands are holding onto the reference bars.
- Use your full attention while operating the machine. Do not engage in any activity that causes distractions; otherwise, injury or property damage may occur.
- Look behind and down before backing up to ensure that the path is clear.
- Never jerk the controls; use a steady motion.
- The owner/user can prevent and is responsible for accidents that may cause personal injury or property damage.
- Wear appropriate clothing including gloves, eye protection, long pants, substantial slip-resistant footwear, and hearing protection. Tie back long hair and do not wear loose clothing or loose jewelry.
- Do not operate the machine when you are tired, ill, or under the influence of alcohol or drugs.
- Never carry passengers and keep pets and bystanders away from the machine.
- Operate the machine only in good light, keeping away from holes and hidden hazards.
- Ensure that all the drives are in neutral and engage the parking brake (if equipped) before starting the engine. Start the engine only from the operator's position.
- Use care when approaching blind corners, shrubs, trees, or other objects that may obscure vision.

- Slow down and use caution when making turns and crossing roads and sidewalks. Watch for traffic.
- Stop the attachment when you are not working.
- Stop the machine, shut off the engine, remove the key, and inspect the machine if you strike an object. Make any necessary repairs before resuming operation.
- Never run an engine in an enclosed area.
- Never leave a running machine unattended.
- Before leaving the operating position, do the following:
  - Park the machine on a level surface.
  - Lower the loader arms and disengage the auxiliary hydraulics.
  - Engage the parking brake (if equipped).
  - Shut off the engine and remove the key.
- Do not operate the machine when there is the risk of lightning.
- Operate the machine only in areas where there is sufficient clearance for you to safely maneuver. Be aware of obstacles in close proximity to you. Failure to maintain adequate distance from trees, walls, and other barriers may result in injury as the machine backs up during operation if you are not attentive to the surroundings.
- Check for overhead clearance (i.e., electrical wires, branches, and doorways) before driving under any objects and do not contact them.
- Do not overfill the attachment and always keep the load level when raising the loader arms. Items in the attachment could fall and cause injury.

Slope Safety

- **Operate the machine up and down slopes with the heavy end of the machine uphill.** Weight distribution changes with attachments. An empty bucket makes the rear of the machine the heavy end, and a full bucket makes the front of the machine the heavy end. Most other attachments make the front of machine the heavy end.
- Raising the loader arms on a slope affects the stability of the machine. Keep the loader arms in the lowered position when on slopes.
- Slopes are a major factor related to loss of control and tip-over accidents, which can result in severe injury or death. **Operating the machine on any slope or uneven terrain requires extra caution.**
- Establish your own procedures and rules for operating on slopes. These procedures must include surveying the site to determine which slopes are safe for machine operation. Always use common sense and good judgment when performing this survey.
- Slow down and use extra care on hillsides. Ground conditions can affect the stability of the machine.
- Avoid starting or stopping on a slope. If the machine loses traction, proceed slowly, straight down the slope.
- Avoid turning on slopes. If you must turn, turn slowly and keep the heavy end of the machine uphill.
- Keep all movements on slopes slow and gradual. Do not make sudden changes in speed or direction.
- If you feel uneasy operating the machine on a slope, do not do it.
- Watch for holes, ruts, or bumps, as uneven terrain could overturn the machine. Tall grass can hide obstacles.
- Use caution when operating on wet surfaces. Reduced traction could cause sliding.
- Evaluate the area to ensure that the ground is stable enough to support the machine.
- Use caution when operating the machine near the following:
  - Drop-offs
  - Ditches
  - Embankments
  - Bodies of water

  The machine could suddenly roll over if a track goes over the edge or the edge caves in. Maintain a safe distance between the machine and any hazard.
- Do not remove or add attachments on a slope.
- Do not park the machine on a hillside or slope.

Utility Line Safety

- If you strike a utility line, do the following:
  - Shut off the machine and remove the key.
  - Remove all individuals from the work area.
  - Immediately contact the proper emergency and utility authorities to secure the area.
  - If you damage a fiber-optic cable, do not look into the exposed light.
- Do not leave the operator's platform if the machine is charged with electricity. You will be safe as long as you do not leave the platform.
  - Touching any part of the machine may ground you.
  - Do not allow another individual to touch or approach the machine when charged.

– Always assume the machine is charged if you strike an electrical or communication line. Do not attempt to leave the machine.

- Leaking gas is both flammable and explosive and may cause serious injury or death. Do not smoke while operating the machine.

Starting the Engine

1. Ensure that the battery-disconnect switch is in the ON position.
2. Insert the key into the key switch and turn it to the ON position.

   Note: In cold weather, wait for the glow plugs to heat the engine before starting the machine.
3. Turn the key to the START position. When the engines starts, release the key.

   Important: **Do not engage the starter for more than 10 seconds at a time. If the engine fails to start, wait 30 seconds for the starter to cool down between attempts. Failure to follow these instructions could burn out the starter motor.**
4. Enable the traction control by toggling the machine-enable switch before driving the machine.

Starting the Engine in Cold Weather

If the outdoor temperature is below freezing, store the machine in a garage to keep it warmer and to aid in starting.

The machine software may automatically limit the engine rpm and disable the auxiliary hydraulics if the coolant is extremely cold. After starting the engine, wait until the cold-start icon and cold hydraulic fluid warning disappear from the Infocenter before increasing the throttle and engaging the auxiliary hydraulics.

Important: **Running the engine at high speeds when the hydraulic system is cold (i.e., when the air temperature is at or below freezing) could damage the hydraulic system. The machine will automatically disable the high engine idle and auxiliary hydraulic system as needed.**

Driving the Machine

Note: Enable the traction control by toggling the traction-enable switch before driving the machine.

Use the traction control to move the machine. The farther you move the traction control in any direction, the faster the machine moves in that direction. Release the traction control to stop the machine.

The throttle control regulates the engine speed as measured in rpm (revolutions per minute). Increase the engine throttle to HIGH IDLE for best performance. You can, however, use the decrease the throttle to operate at slower speeds.

Adjusting the Maximum Traction Speed

You can adjust the maximum traction speed of the machine so that the full forward position of the traction control does not exceed a preset speed, adjusted in 10% increments (between 20% and 100%) of the machine's top speed. A supervisor can restrict the maximum speed range for operators via the Protected Menus; refer to Accessing Protected Menus (page 16).

1. On the Traction Run Screen, use the left and center buttons to adjust the maximum speed.

   Note: Note: If a supervisor restricts the maximum speed range, you cannot select the restricted speeds.

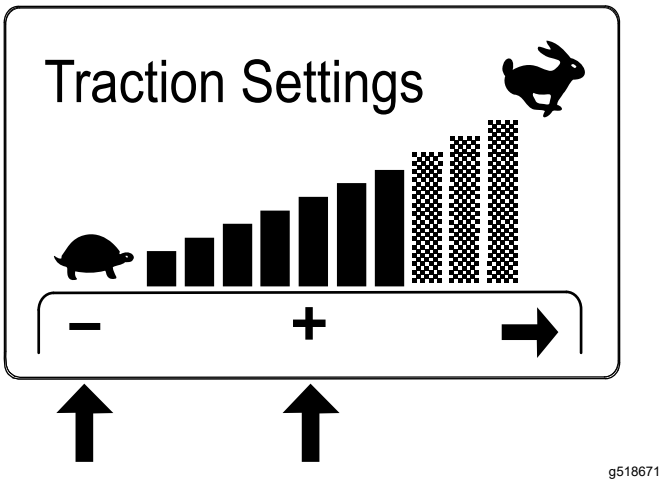

Figure 21

2. Press the right button to save the setting.

   Note: The machine saves this setting until the next key cycle, after which the maximum traction speed resets to full speed or the maximum speed that the supervisor set.

Shutting Off the Engine

1. Park the machine on a level surface, lower the loader arms, and engage the parking brake.
2. Disengage the auxiliary hydraulics.
3. Set the throttle to low idle.
4. If the engine has been working hard or is hot, let it idle for 5 minutes before turning the key switch to the OFF position.

   Note: This helps to cool the engine before you shut it off. In an emergency, you can shut off the engine immediately.
5. Turn the key switch to the OFF position and remove the key.

⚠ WARNING

A child or untrained bystander attempting to operate the traction unit could result in death or serious injury.

Remove the key from the key switch when leaving the traction unit, even if just for a few seconds.

Using Attachments

Installing an Attachment

Important: **Use only Toro-approved attachments. Attachments can change the stability and the operating characteristics of the machine.**

Important: **Before installing the attachment, ensure that the mount plates are free of any dirt or debris and that the pins move freely. If the pins do not move freely, grease them.**

1. Position the attachment on a level surface with enough space behind it to accommodate the machine.
2. Start the engine.
3. Tilt the attachment mount plate forward.
4. Position the mount plate into the upper lip of the attachment receiver plate.

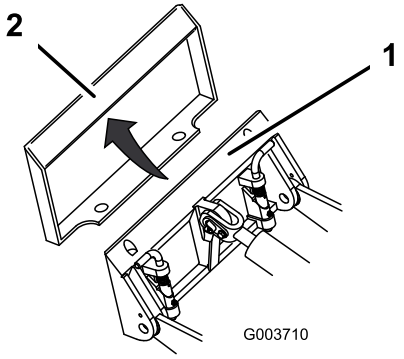

g003710

Figure 22

1. Mount plate
2. Receiver plate

5. Raise the loader arms while tilting back the mount plate at the same time.

   Important: **Raise the attachment enough to clear the ground and tilt the mount plate all the way back.**
6. Shut off the engine and remove the key.
7. Engage the quick-attach pins, ensuring that they are fully seated in the mount plate.

   Important: **If the pins do not rotate to the engaged position, the mount plate is not fully aligned with the holes in the attachment receiver plate. Check the receiver plate and clean it if necessary.**

⚠ WARNING

If you do not fully seat the quick-attach pins through the attachment mount plate, the attachment could fall off the machine, crushing you or bystanders.

Ensure that the quick-attach pins are fully seated in the attachment mount plate.

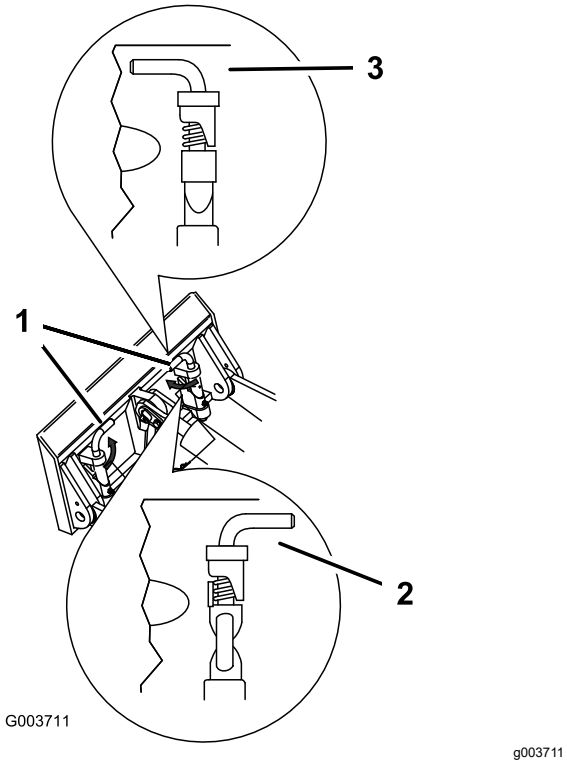

Figure 23

1. Quick-attach pins (engaged position)
2. Disengaged position
3. Engaged position

Connecting the Hydraulic Hoses

⚠ WARNING

Hydraulic fluid escaping under pressure can penetrate skin and cause injury. Fluid injected into the skin must be surgically removed within a few hours by a doctor familiar with this form of injury; otherwise, gangrene could result.

- **Ensure that all hydraulic-fluid hoses and lines are in good condition and all hydraulic connections and fittings are tight before applying pressure to the hydraulic system.**
- **Keep your body and hands away from pinhole leaks or nozzles that eject high-pressure hydraulic fluid.**
- **Use cardboard or paper to find hydraulic leaks; never use your hands.**

⚠ CAUTION

Hydraulic couplers, hydraulic lines and valves, and hydraulic fluid may be hot. Contact with hot components could cause a burn, resulting in minor or moderate injury.

- **Wear gloves when operating the hydraulic couplers.**
- **Allow the machine to cool before touching hydraulic components.**
- **Do not touch hydraulic fluid spills.**

If the attachment requires hydraulics for operation, connect the hydraulic hoses as follows:

1. Shut off the engine.
2. Turn the key to the RUN position, but do not start the machine.
3. Press the auxiliary hydraulic control switch back and forth to relieve pressure at the hydraulic couplers.
4. Turn the key to the OFF position and remove it.
5. Remove the protective covers from the hydraulic connectors on the machine.
6. Ensure that all foreign matter is cleaned from the hydraulic connectors.
7. Push the attachment male connector into the female connector on the machine.

   Note: When you connect the attachment male connector first, you relieve any pressure built up in the attachment.

8. Push the attachment female connector onto the male connector on the machine.
9. Confirm that the connection is secure by pulling on the hoses.

Removing an Attachment

1. Park the machine on a level surface.
2. Lower the attachment to the ground.
3. Shut off the engine and remove the key.
4. Disengage the quick-attach pins by turning them to the outside.
5. If the attachment uses hydraulics, do the following:
   A. Turn the key to the RUN position, but do not start the machine.
   B. Press the auxiliary hydraulic control switch back and forth to relieve pressure at the hydraulic couplers.
   C. Turn the key to the OFF position and remove it.
   D. Slide the collars back on the hydraulic couplers and disconnect them.

      Important: **Connect the attachment hoses together to prevent hydraulic system contamination during storage.**

   E. Install the protective covers onto the hydraulic couplers on the machine.
6. Start the engine, tilt the mount plate forward, and back the machine away from the attachment.

Understanding Smart Power® Traction

The Smart Power® function senses the load on the engine and adjusts the maximum traction speed while maintaining the engine speed so that you can optimize performance in powered attachments.

Engage the attachment hydraulics and slowly move the traction control to activate Smart Power.

To toggle Smart Power ON and OFF press the middle button on the main run screen or set the Smart Power to ON in the settings section of the InfoCenter; refer to InfoCenter Display (page 14).

Note: For applications not requiring auxiliary hydraulics, such as digging with a bucket, the machine may perform better with Smart Power set to OFF.

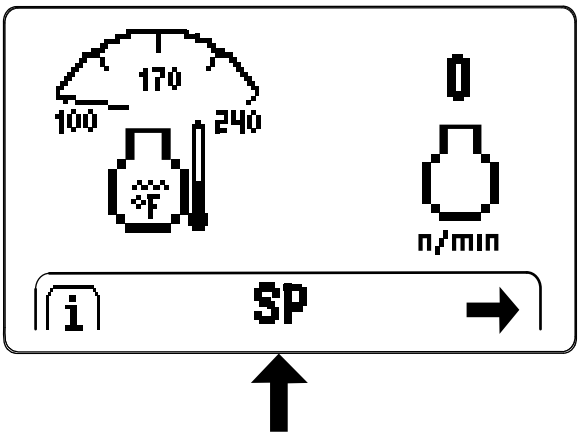

g518670

Figure 24

After Operation

After Operation Safety

General Safety

- Engage the parking brake (if equipped), lower the loader arms, shut off the engine, remove the key, wait for all movement to stop, and allow the machine to cool before adjusting, cleaning, storing, or servicing it.
- Clean debris from the attachments, drives, mufflers, and engine to help prevent fires. Clean up oil or fuel spills.
- Keep all parts in good working condition and all hardware tightened.
- Do not touch parts that may be hot from operation. Allow them to cool before attempting to maintain, adjust, or service the machine.
- Use care when loading or unloading the machine into a trailer or truck.

Retrieving a Stuck Machine

If the machine becomes stuck (e.g., in muddy conditions), pull the machine back into a stable position using either both front tie-down/lift points or both rear tie-down points simultaneously.

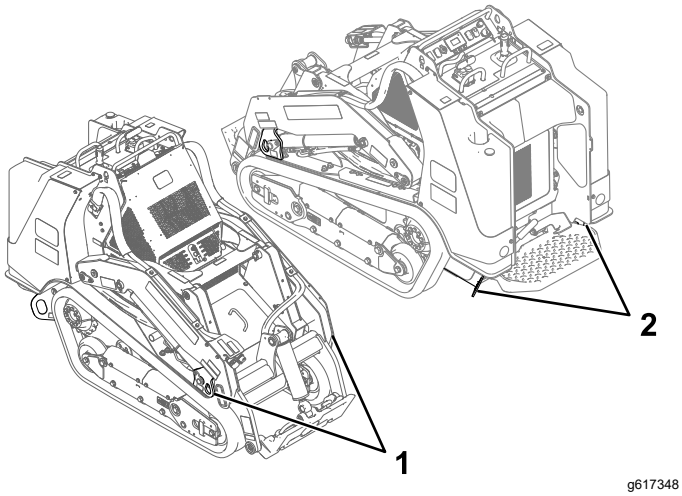

Figure 25

1. Front tie-down/lift points
2. Rear tie-down points

Moving a Non-Functioning Machine

Important: **Do not tow or pull the machine without first opening the tow valves, or you will damage the hydraulic system.**

1. Shut off the engine and remove the key.
2. Remove the lower front cover.
3. Using a wrench, turn the tow valves on the hydraulic pumps twice counterclockwise.

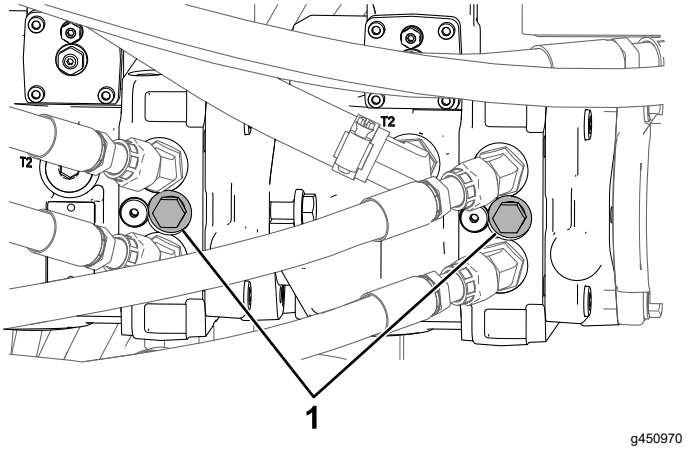

Figure 26

View from below

1. Tow valve

4. Disengage the parking brake.
5. Tow the machine as required.
6. Engage the parking brake and repair the machine.
7. Close the tow valves and install the lower front cover before operating the machine.

Hauling the Machine

Use a heavy-duty trailer or truck to haul the machine. Use a full-width ramp. Ensure that the trailer or truck has all the necessary brakes, lighting, and marking as required by law. Please carefully read all the safety instructions. Knowing this information could help you or bystanders avoid injury. Refer to your local ordinances for trailer and tie-down requirements.

⚠ WARNING

Driving on the street or roadway without turn signals, lights, reflective markings, or a slow-moving-vehicle emblem is dangerous and could lead to accidents resulting in death or serious injury.

Do not drive the machine on a public street or roadway.

Selecting a Trailer

⚠ WARNING

Loading or unloading a machine onto a trailer or truck increases the possibility of tip-over and could result in death or serious injury.

- **Use only full-width ramps.**
- **Ensure that the length of ramp is at least 4 times as long as the height of the trailer or truck bed to the ground. This ensures that ramp angle does not exceed 15 degrees on flat ground.**

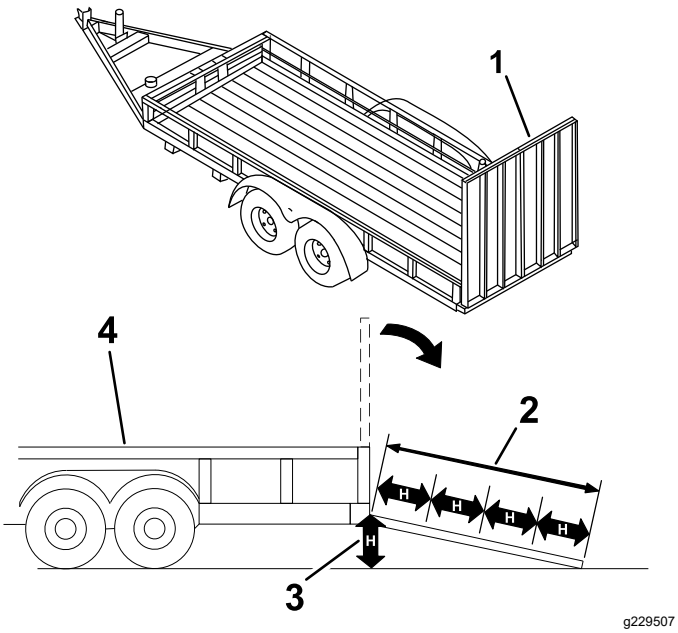

Figure 27

1. Full-width ramp(s) in stowed position
2. Ramp is at least 4 times as long as the height of the trailer or truck bed to the ground
3. H=height of the trailer or truck bed to the ground
4. Trailer

Loading the Machine

⚠ WARNING

Loading or unloading a machine onto a trailer or truck increases the possibility of tip-over and could result in death or serious injury.

- **Use extreme caution when operating a machine on a ramp.**
- **Load and unload the machine with the heavy end up the ramp.**
- **Avoid sudden acceleration or deceleration while driving the machine on a ramp as this could cause a loss of control or a tip-over situation.**

1. If using a trailer, connect it to the towing vehicle and connect the safety chains.
2. If applicable, connect the trailer brakes.
3. Lower the ramp(s).
4. Lower the loader arms.
5. Load the machine onto the trailer with the heavy end up the ramp, carrying loads low (Figure 28).
   - If the machine has a **full** load-bearing attachment (e.g., bucket) or a non-load-bearing attachment (e.g., trencher), drive the machine forward up the ramp.
   - If the machine has an **empty** load-bearing attachment or no attachment, back the machine up the ramp.

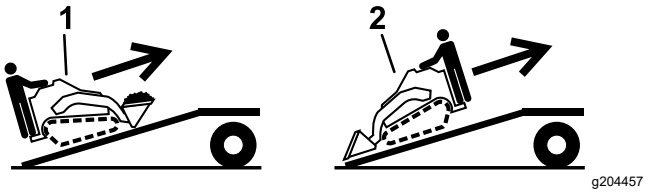

Figure 28

1. Machine with full attachment or non-load-bearing attachment—drive the machine forward up the ramp(s).
2. Machine with empty or no attachment—back the machine up the ramp(s).

6. Lower the loader arms all the way down.
7. Engage the parking brake (if equipped), shut off the engine, and remove the key.
8. Use the metal tie-down loops on the machine to securely fasten the machine to the trailer or truck with straps, chains, cable, or ropes (Figure 29). Refer to local regulations for tie-down requirements.

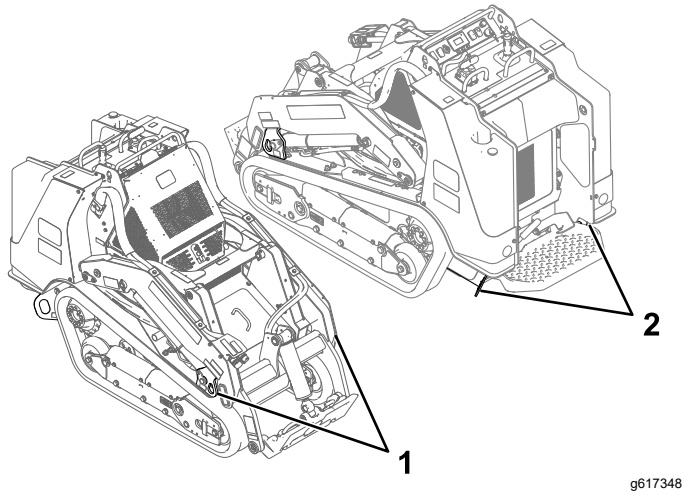

Figure 29

1. Tie-down loops

Unloading the Machine

1. Lower the ramp(s).
2. Unload the machine from the trailer with the heavy end up the ramp, carrying loads low (Figure 30).
   - If the machine has a **full** load-bearing attachment (e.g., bucket) or a non-load-bearing attachment (e.g., trencher), back it down the ramp.
   - If the machine has an **empty** load-bearing attachment or no attachment, drive it forward down the ramp.

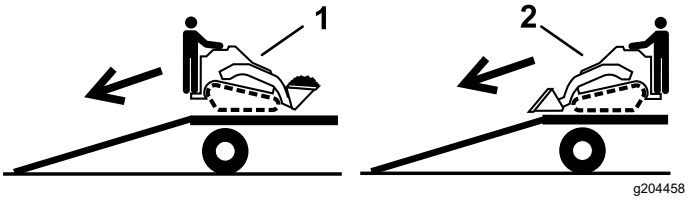

Figure 30

1. Machine with full attachment or non-load-bearing attachment—back the machine down the ramp(s).
2. Machine with empty or no attachment—drive the machine forward down the ramp(s).

Lifting the Machine

Remove any attachments and lift the machine using the 2 lift points.

Do not exceed a 20-degree angle when lifting the machine; use the minimum chain lengths provided below.

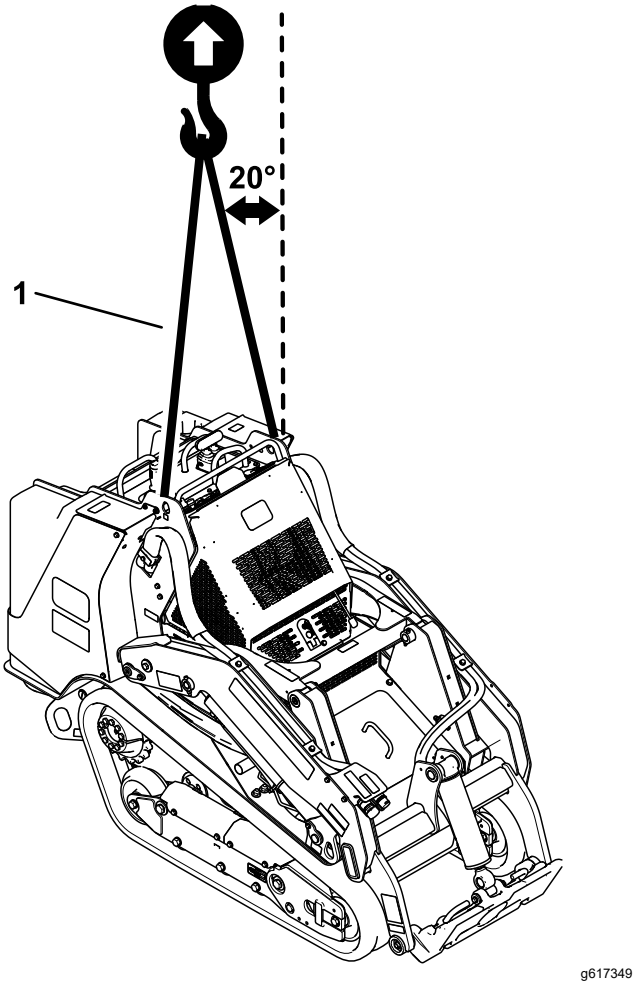

Figure 31

1. Chain length for rear lift point (2)—76 cm (30 inches)

Maintenance

Note: Determine the left and right sides of the machine from the normal operating position.

Maintenance Safety

⚠ CAUTION

If you leave the key in the switch, someone could accidently start the engine and seriously injure you or other bystanders.

Remove the key from the switch before you perform any maintenance.

- Park the machine on a level surface, disengage the auxiliary hydraulics, lower the attachment, engage the parking brake (if equipped), shut off the engine, and remove the key. Wait for all movement to stop and allow the machine to cool before adjusting, cleaning, storing, or repairing it.
- Clean up oil or fuel spills.
- Do not allow untrained personnel to service the machine.
- Use jack stands to support the components when required.
- Carefully release pressure from components with stored energy; refer to Relieving Hydraulic Pressure (page 50).
- Disconnect the battery before making any repairs; refer to Using the Battery-Disconnect Switch (page 40).
- Keep your hands and feet away from the moving parts. If possible, do not make adjustments with the engine running.
- Keep all parts in good working condition and all hardware tightened. Replace all worn or damaged decals.
- Do not tamper with the safety devices.
- Use only Toro-approved attachments. Attachments can change the stability and the operating characteristics of the machine.
- Use only genuine Toro replacement parts.
- If any maintenance or repair requires the loader arms to be in the raised position, secure the arms in the raised position with the hydraulic-cylinder lock(s).
- Refer to local regulations for safely maintaining the machine and attach a warning tag to the control panel to inform others of ongoing maintenance.

Recommended Maintenance Schedule(s)

Maintenance Service Interval	Maintenance Procedure
After the first 8 hours	• Check and adjust the track tension.
After the first 50 hours	• Check and adjust the track tension.
Before each use or daily	• Grease the machine. (Grease immediately after every washing.) • Check the air-filter-service indicator. • Check the engine-oil level. • Clean the tracks and check for excessive wear and proper tension. • Clean the screen, oil cooler, and front of the radiator (more often in dirty or dusty conditions). • Check the coolant level in the expansion tank. • Check and clean the radiator screen • Check the hydraulic-fluid level. • Remove debris from the machine. • Check for loose fasteners.
Every 25 hours	• Remove the air-cleaner cover, clean out debris, and check the air-filter-service indicator.
Every 50 hours	• Drain water and other contaminants from the water separator. • Check the battery condition. • Check and adjust the track tension.

Maintenance Service Interval	Maintenance Procedure
Every 100 hours	• Check the cooling system hoses. • Check the hydraulic lines for leaks, loose fittings, kinked lines, loose mounting supports, wear, weather, and chemical deterioration. • Check for dirt buildup in the chassis. (More often in dirty conditions.) • Check the alternator/fan belt tension (refer to the engine owner's manual for instructions).
Every 250 hours	• Change the engine oil and filter.
Every 400 hours	• Check the fuel lines and connections for deterioration, damage, or loose connections. • Replace the hydraulic filter and fluid (if not using Toro fluid).
Every 500 hours	• Replace the air filters. • Replacing the water separator filter. • Replace the in-line fuel filter • Replace the alternator/fan belt (refer to the engine owner's manual for instructions).
Every 1,000 hours	• Replace the hydraulic filter and fluid (if using Toro fluid).
Every 1,500 hours or 2 years, whichever comes first	• Replace all moving hydraulic hoses.
Yearly	• Change the engine coolant.
Yearly or before storage	• Check and adjust the track tension. • Touch up chipped paint.
Every 2 years	• Drain and clean the fuel tank(s)—Authorized Service Dealer only.

Important: **Refer to your engine owner's manual for additional maintenance procedures.**

Pre-Maintenance Procedures

Using the Cylinder Lock

⚠ WARNING

The loader arms may lower when in the raised position, crushing anyone under them, which could result in death or serious injury.

Install the cylinder lock(s) before performing maintenance that requires raised loader arms.

Installing the Cylinder Lock

1. Remove the attachment.
2. Raise the loader arms to the fully raised position.
3. Shut off the engine and remove the key.
4. Remove the 2 pins securing the cylinder lock to the posts on the side of the machine.
5. Slide the cylinder lock over the lift-cylinder rod (Figure 32).

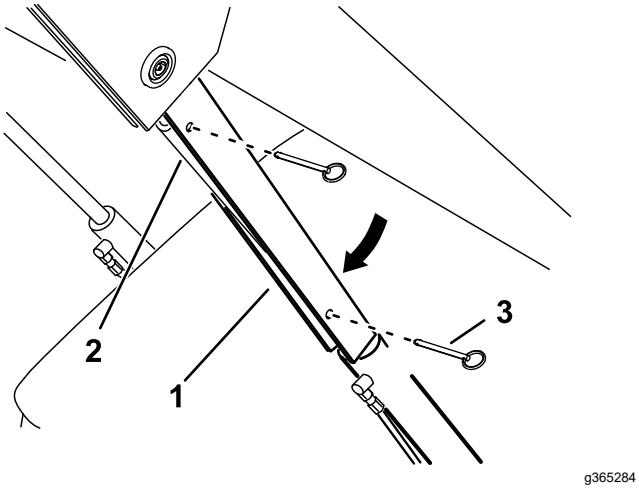

Figure 32

1. Cylinder lock
2. Lift-cylinder rod
3. Pin (2)

6. **Slowly** lower the loader arms until the cylinder lock contacts the cylinder body and rod end.

Removing and Storing the Cylinder Lock

Important: **Remove the cylinder lock from the rod and fully secure it in the storage position before operating the machine.**

1. Start the engine.
2. Raise the loader arms to the fully raised position.
3. Shut off the engine and remove the key.
4. Remove the pins securing the cylinder lock.
5. Place the cylinder lock on the posts on the sides of the machine and secure with the pins.
6. Lower the loader arms.

Accessing Internal Components

⚠ WARNING

Opening or removing covers, hoods, and screens while the engine is running could allow you to contact moving parts. Contact with moving parts could result in death or serious injury.

Before opening any of the covers, hoods, and screens, shut off the engine, remove the key from the key switch, and allow the engine to cool.

Opening the Hood

1. Loosen the hood-locking screw.

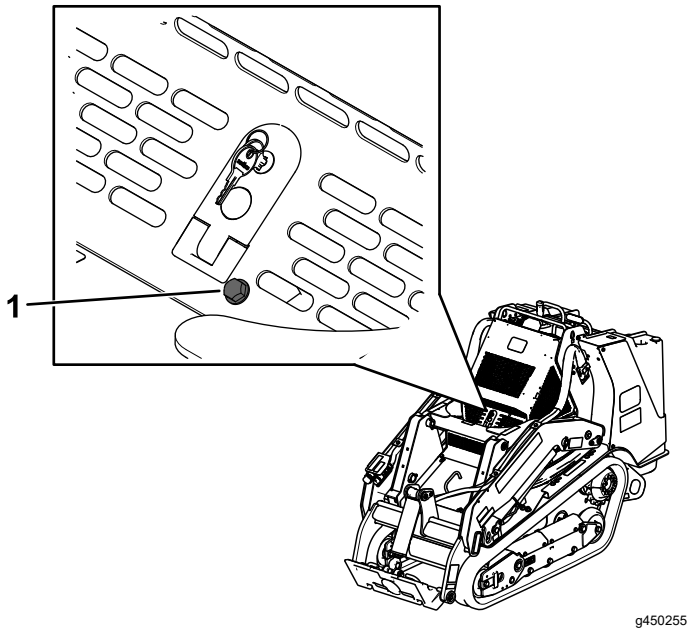

Figure 33

1. Hood-locking screw

2. Unlock the hood using the latch key and press the button to release the latch.

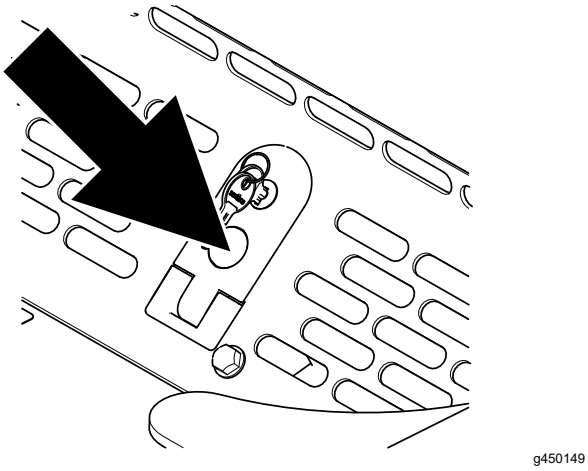

Figure 34

3. Lift open the hood.

Closing the Hood

1. Lower the hood.
2. Press down the latch to secure the hood.
3. Lock the hood using the latch key and tighten the hood-locking bolt.

Removing the Rear Cover

1. Remove the 2 bolts securing the top of the rear cover.

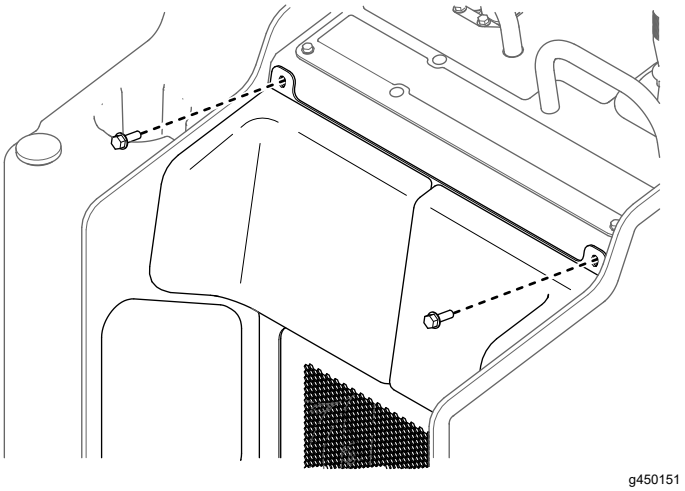

Figure 35

2. Lift the cover out of the slots in radiator bracket.

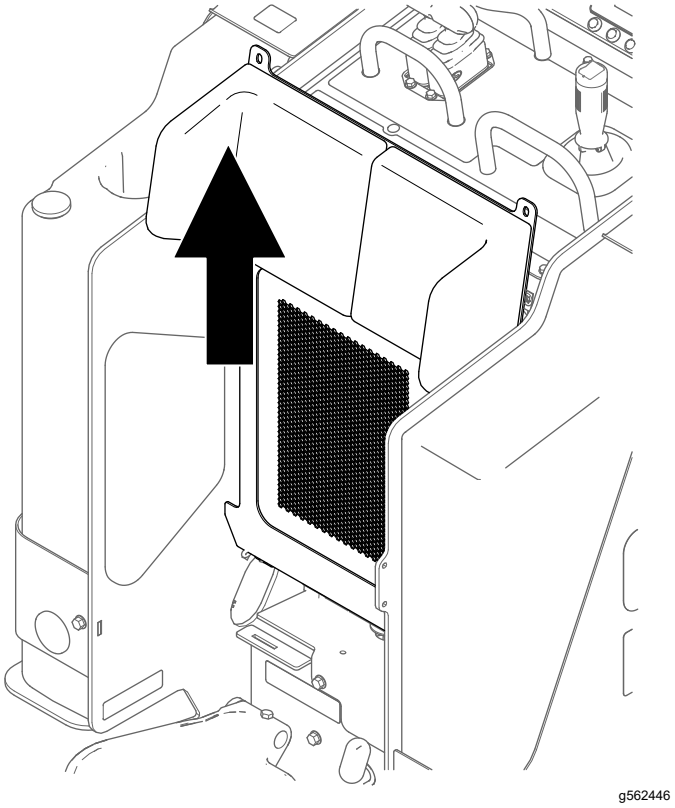

Figure 36

Reverse the procedure to install the rear cover.

Removing the Bottom Plate

1. Remove the 2 bolts securing the bottom plate.

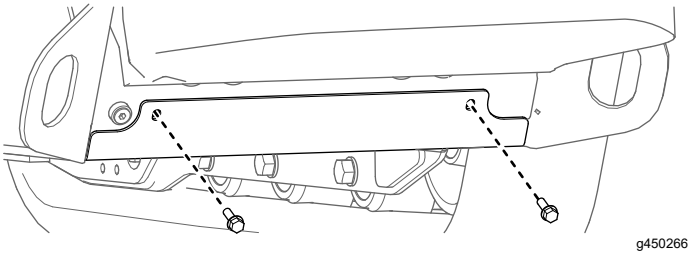

Figure 37

2. Remove the bottom plate.

Removing the Front Cover

1. Raise the loader arms and secure them with the cylinder lock.
2. Loosen the 2 bolts securing the front cover to the machine.

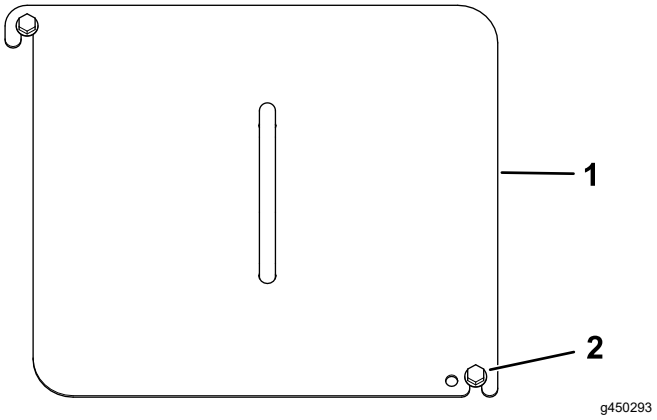

Figure 38

1. Front cover
2. Bolt (2)

3. Slide the cover off the machine.
4. When installing the cover, torque the bolts to 41 N·m (30 ft-lb).

Removing the Front Cover Assembly

1. Raise the loader arms and secure them with the cylinder lock.
2. Open the hood.
3. Remove the 4 bolts securing the cover assembly to the machine.

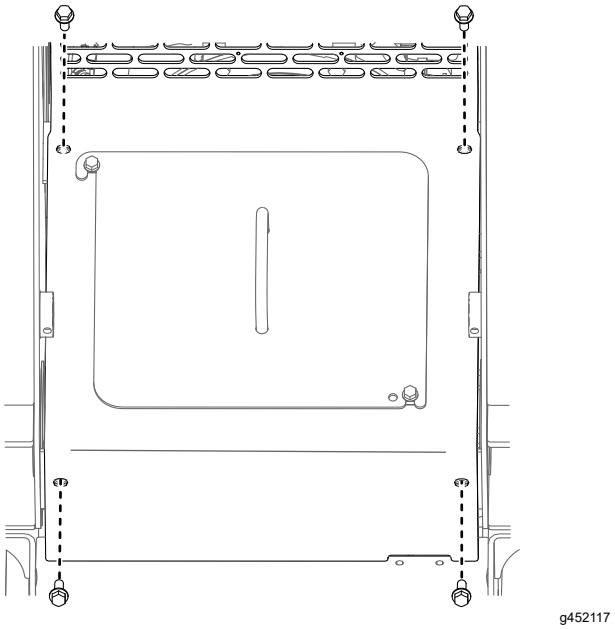

Figure 39

4. Remove the cover assembly.

Removing the Front Access Plate

Loosen the 2 bolts and remove the front access plate.

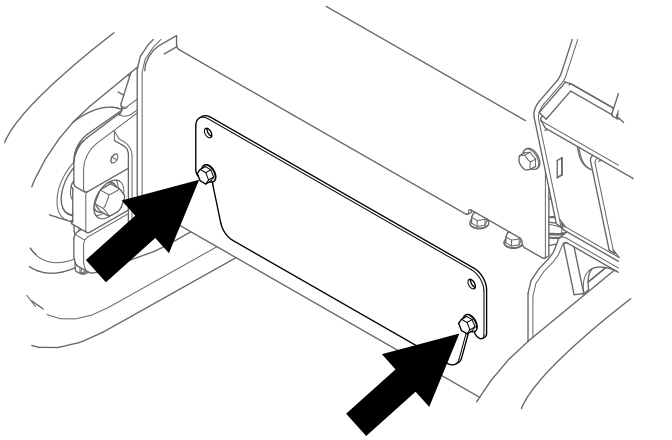

Figure 40

Removing the Side Screens

1. Open the hood.
2. Slide the screen out of the front and rear slots.

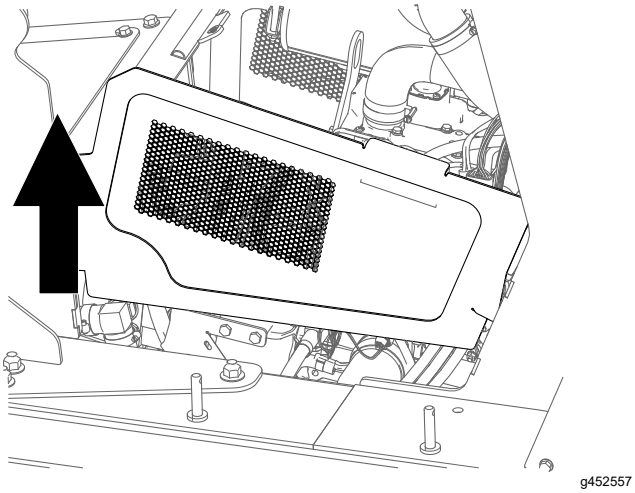

Figure 41

1. Side screen

Lubrication

Greasing the Machine

Service Interval: Before each use or daily (Grease immediately after every washing.)

Grease Type: General-purpose grease.

1. Park the machine on a level surface, lower the loader arms, and engage the parking brake.
2. Shut off the engine and remove the key.
3. Clean the grease fittings with a rag.

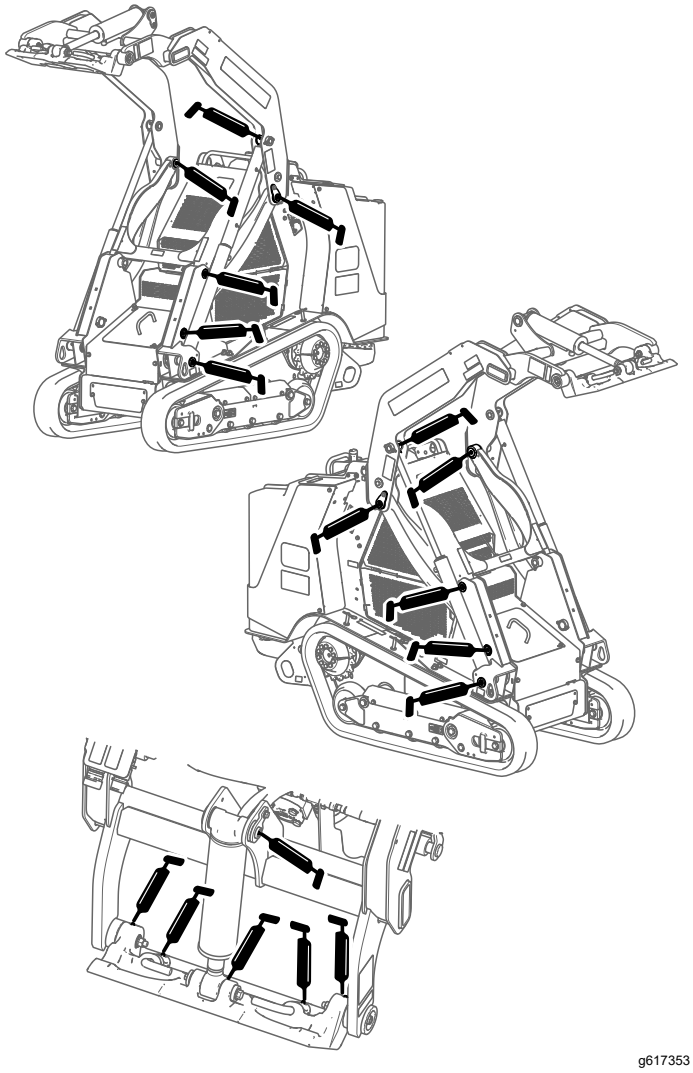

Figure 42

4. Connect a grease gun to each fitting.
5. Pump grease into the fittings until grease begins to ooze out of the bearings (approximately 3 pumps).
6. Wipe up any excess grease.

Engine Maintenance

Engine Safety

- Shut off the engine before checking the oil or adding oil to the crankcase.
- Do not change the engine governor setting or overspeed the engine.
- Keep your hands, feet, face, other body parts, and clothing away from the muffler and other hot surfaces.

Servicing the Air-Cleaner

Service Interval: Before each use or daily—Check the air-filter-service indicator.

Every 25 hours—Remove the air-cleaner cover, clean out debris, and check the air-filter-service indicator.

Every 500 hours—Replace the air filters.

Checking the Air Cleaner

Important: **To prevent engine damage, always operate the engine with the air filter and cover installed.**

Important: **Replace the primary air-cleaner filter only when the service indicator shows red. Changing the air filter before it is necessary only increases the chance of dirt entering the engine when you remove the filter.**

1. Park the machine on a level surface, lower the loader arms, and engage the parking brake.
2. Shut off the engine and remove the key.
3. Open the hood.
4. Check the air-cleaner body for damage that could cause an air leak. Check the whole intake system for leaks, damage, or loose hose clamps. Replace or repair any damaged components.
5. Pull out the latch on the air cleaner cover and then twist and pull the cover off.

   Important: **Do not remove the air filters.**

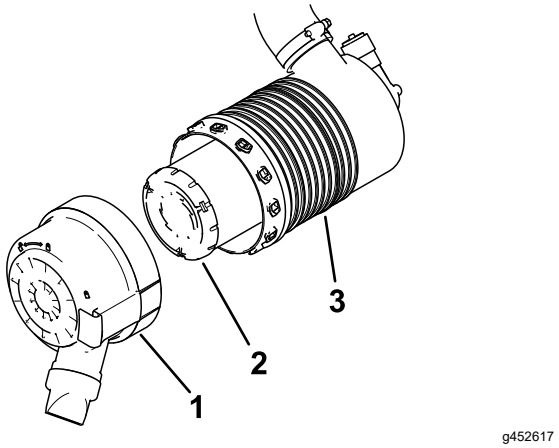

Figure 43

1. Air-cleaner cover
2. Primary filter
3. Dust Air-cleaner body

6. Squeeze the dust cap sides to open it and knock the dust out.
7. Clean the inside of the cover with compressed air that is under 205 kPa (30 psi).

   Important: **Do not use compressed air on the air-cleaner body.**
8. Check the service indicator.
   - If the service indicator is clear, install the cover with the dust cap oriented downward and secure the latches.
   - If the service indicator is red, replace the air filter.

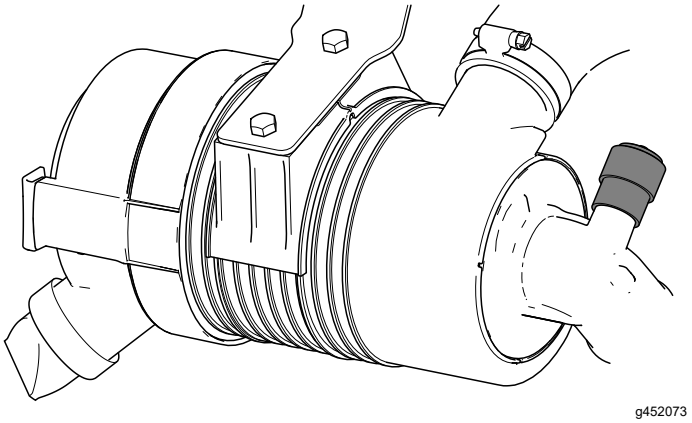

Figure 44

Replacing the Filter(s)

1. Gently slide the primary filter out of the air-cleaner body.

   Note: Avoid knocking the filter into the side of the body.

   Important: **Do not attempt to clean the filter.**

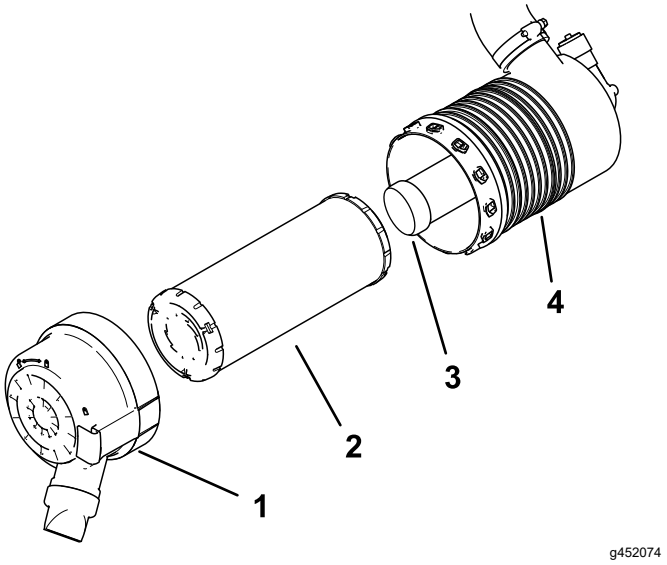

Figure 45

1. Air-cleaner cover
2. Primary filter
3. Safety filter
4. Air-filter body

2. If replacing the safety filter, gently slide the primary filter out of the air-cleaner body.
3. Inspect the new filter(s) for tears, an oily film, or damage to the rubber seal. Look into the filter while shining a bright light on the outside of the filter; holes in the filter appear as bright spots.

   If the filter is damaged, do not use it.
4. Carefully install the filter(s).

   Note: Ensure that each filter is fully seated by pushing on the outer rim of the filter while installing it.

   Important: **Do not press on the soft inside area of the filter.**
5. Install the air-cleaner cover with the dust cap oriented downward as shown in Figure 43 and secure the latches.
6. Close the hood.
7. Lower the loader arms.

Servicing the Engine Oil

Service Interval: Before each use or daily—Check the engine-oil level.

Every 250 hours—Change the engine oil and filter.

Engine-Oil Specifications

Oil Type:

- API service category CD, CF, CF-4, CI-4
- ACEA service category E3, E-4, E-5
- JASO service category DH-1

Crankcase capacity: 3.6 L (3.8 US qt) with the filter

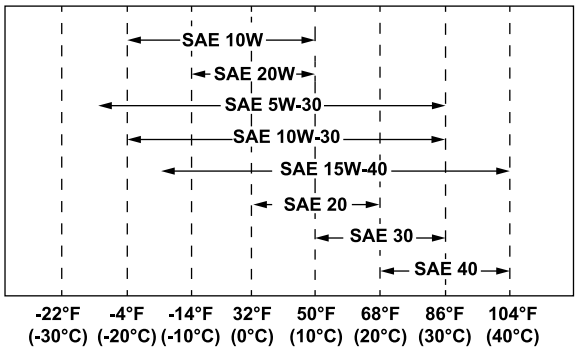

g228368

Figure 46

Note: Toro Premium Engine oil is available from your Authorized Service Dealer.

Checking the Engine-Oil Level

1. Park the machine on a level surface, lower the loader arms, and engage the parking brake.
2. Shut off the engine, remove the key, and allow the engine to cool.
3. Open the hood.
4. Remove the left side screen.
5. Clean the area around the oil dipstick and oil-fill cap.

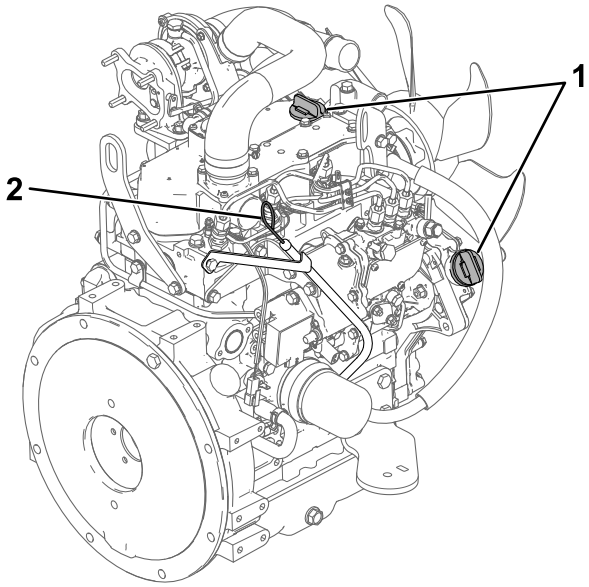

g453776

Figure 47

1. Oil-fill cap
2. Oil dipstick

6. Check the oil and add additional oil as needed.

   Important: **Do not overfill the crankcase with oil; if the oil in the crankcase is too high and you run the engine, you may damage the engine.**

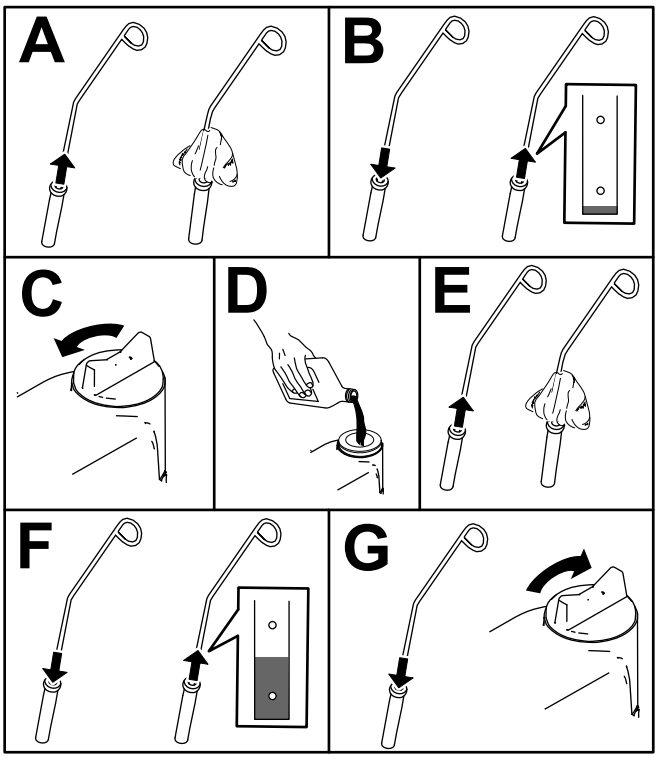

g453775

Figure 48

7. Close the hood.

Changing the Engine Oil and Filter

1. Remove any attachments.
2. Start the engine and let it run for 5 minutes.

   Note: This warms the oil so that it drains better.
3. Park the machine on a level surface.
4. Raise the loader arms and install the cylinder lock.
5. Engage the parking brake.
6. Shut off the engine and remove the key.
7. Drain the oil beneath the platform.

⚠ CAUTION

Components will be hot if the machine has been running. Contact with hot parts could result in minor or moderate injury.

Use care to avoid touching hot components while changing the oil and/or filter.

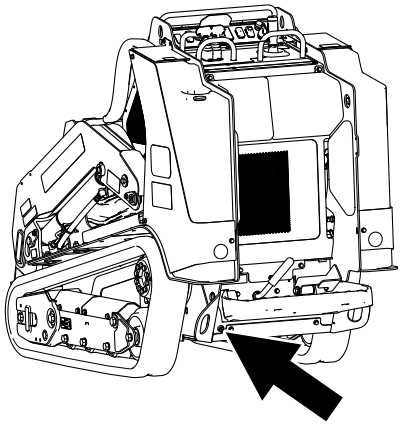

g453780

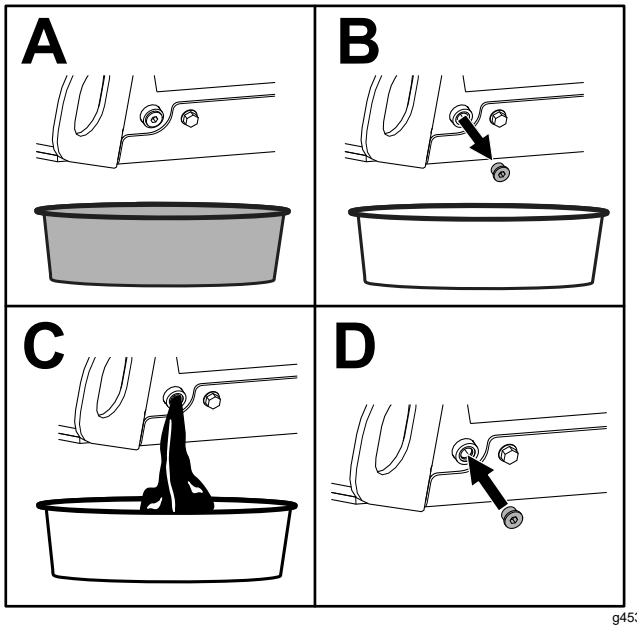

g453779

Figure 49

8. Torque the drain plug to 46 to 56 N·m (34 to 42 ft-lb).
9. Open the hood.
10. Remove the left screen; refer to Removing the Side Screens (page 33).
11. Place a shallow pan or rag under the filter to catch oil.
12. Change the oil filter.

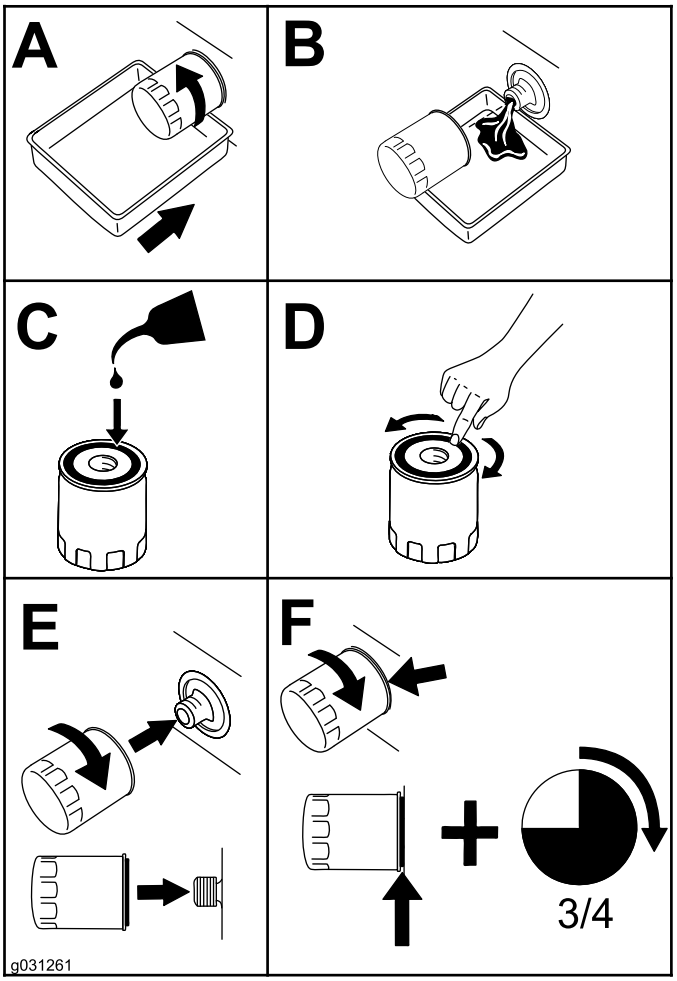

g031261

Figure 50

13. Remove the oil-fill cap and slowly pour approximately 80% of the specified amount of oil in through the valve cover.
14. Check the oil level.
15. Slowly add additional oil to bring the level to the upper hole on the dipstick.
16. Replace the fill cap.
17. Install the left screen.
18. Close the hood.

Fuel System Maintenance

⚠ DANGER

In certain conditions, fuel is extremely flammable and highly explosive. A fire or explosion from fuel can burn you and others and can damage property.

Refer to Fuel Safety (page 18) for a complete list of fuel related precautions.

Draining the Water Separator

Service Interval: Every 50 hours

1. Park the machine on a level surface, lower the loader arms, and engage the parking brake.
2. Shut off the engine and remove the key.
3. Remove the rear cover.
4. Place a container under the water separator.

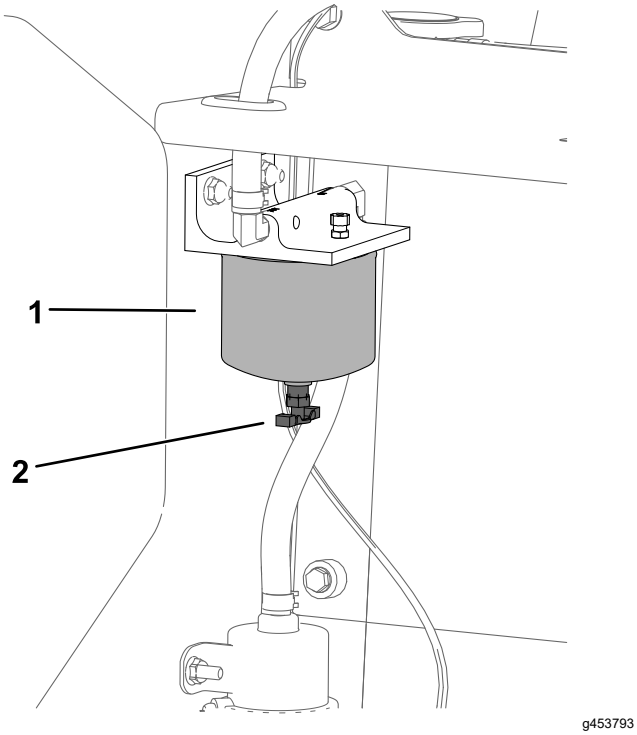

Figure 51

1. Water separator
2. Drain valve

5. Loosen the drain valve on the bottom of the filter canister and allow the water to drain.
6. Tighten the drain valve.

Replacing the Water Separator Filter

Service Interval: Every 500 hours

1. Park the machine on a level surface, lower the loader arms, and engage the parking brake.
2. Shut off the engine and remove the key.
3. Remove the rear cover; refer to Removing the Rear Cover (page 31).
4. Clean the area where the water separator filter mounts.

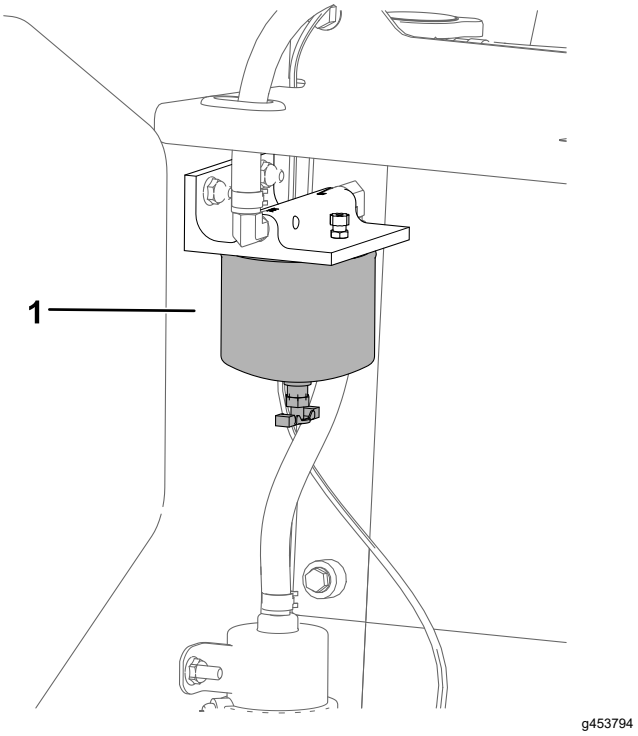

Figure 52

1. Water separator

5. Remove the filter canister and clean the mounting surface
6. Lubricate the gasket on the new filter canister with clean oil.
7. Fill the canister with fuel.
8. Install the filter canister by hand until the gasket contacts the mounting surface, then rotate it an additional 1/2 turn.
9. Install the rear cover.

Checking the Fuel Lines and Connections

Service Interval: Every 400 hours/Yearly (whichever comes first)

Inspect the fuel lines and connections for deterioration, damage, or loose connections. Tighten any loose connections and contact your Authorized Service Dealer for assistance in fixing damaged fuel lines.

Replacing the In-Line Fuel Filter

Service Interval: Every 500 hours

1. Park the machine on a level surface, lower the loader arms, and engage the parking brake.
2. Shut off the engine and remove the key.
3. Remove the rear cover; refer to Removing the Rear Cover (page 31).
4. Replace the filter as shown.

   Note: Ensure that the markings on the filter follow the fuel flow direction.

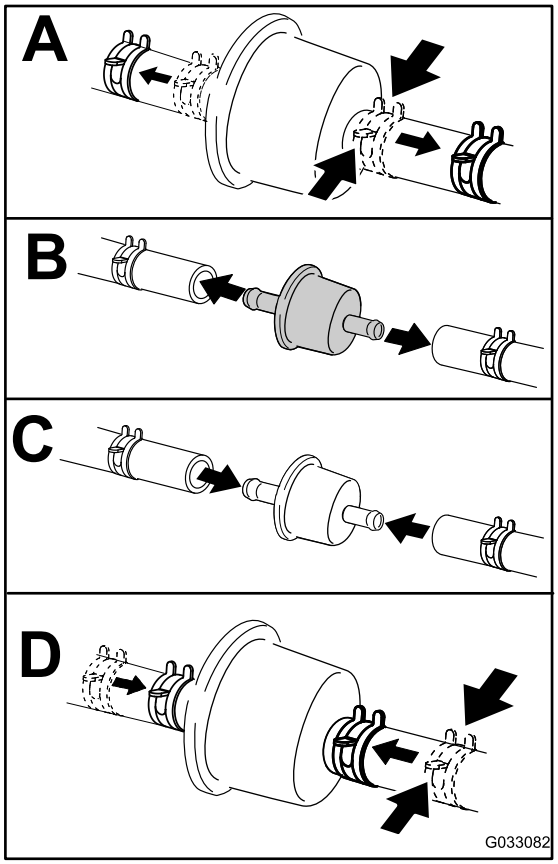

g033082

Figure 53

5. Install the rear cover.

Bleeding the Fuel System

You must bleed the fuel system before starting the engine if any of the following situations have occurred:

- Initial startup of a new machine
- The engine has ceased running due to a lack of fuel.
- Maintenance has been performed upon fuel-system components (e.g., filter replaced).

1. Turn the key to the RUN position.
2. Let the fuel pump run for 2 minutes prior to starting the machine.

Draining the Fuel Tank(s)

Service Interval: Every 2 years

Have an Authorized Service Dealer drain and clean the fuel tank(s).

Electrical System Maintenance

Electrical System Safety

- Disconnect the battery before making any repairs; refer to Using the Battery-Disconnect Switch (page 40).
- Charge the battery in an open, well-ventilated area, away from sparks and flames. Unplug the charger before connecting or disconnecting the battery. Wear protective clothing and use insulated tools.
- Battery acid is poisonous and can cause burns. Avoid contact with skin, eyes, and clothing. Protect your face, eyes, and clothing when working with a battery.
- Battery gases can explode. Keep cigarettes, sparks, and flames away from the battery.

Servicing the Battery

Service Interval: Every 50 hours

Using the Battery-Disconnect Switch

⚠ CAUTION

Contact with hot surfaces could result in minor or moderate injury.

Keep your hands, feet, face, clothing and other body parts away the muffler and other hot surfaces.

1. Park the machine on a level surface, lower the loader arms, and engage the parking brake.
2. Shut off the engine and remove the key.
3. Open the hood.
4. Turn the battery-disconnect switch to the ON or OFF position to perform the following:
   - To energize the machine electrically, rotate the battery-disconnect switch clockwise to the ON position (Figure 54).
   - To de-energize the machine electrically, rotate the battery-disconnect switch counterclockwise to the OFF position (Figure 54).

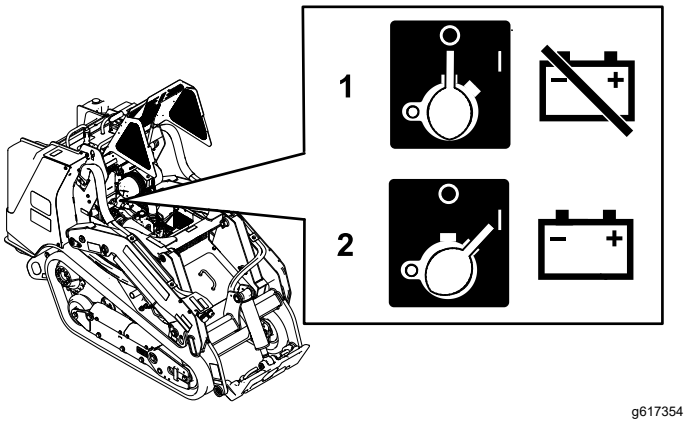

Figure 54

1. Battery-disconnect switch—OFF position
2. Battery-disconnect switch—ON position

Removing the Battery

⚠ WARNING

Incorrect battery cable routing could damage the machine and cables, causing sparks. Sparks could cause the battery gasses to explode, resulting in death or serious injury.

Always disconnect the negative (black) battery cable before disconnecting the positive (red) cable.

1. Remove any attachments.
2. Park the machine on a level surface.
3. Raise the loader arms and install the cylinder lock.
4. Engage the parking brake.
5. Shut off the engine and remove the key.
6. Remove the front cover assembly; refer to Removing the Front Cover Assembly (page 32).
7. Disconnect the negative (black) ground cable from the battery post. Retain the fasteners.

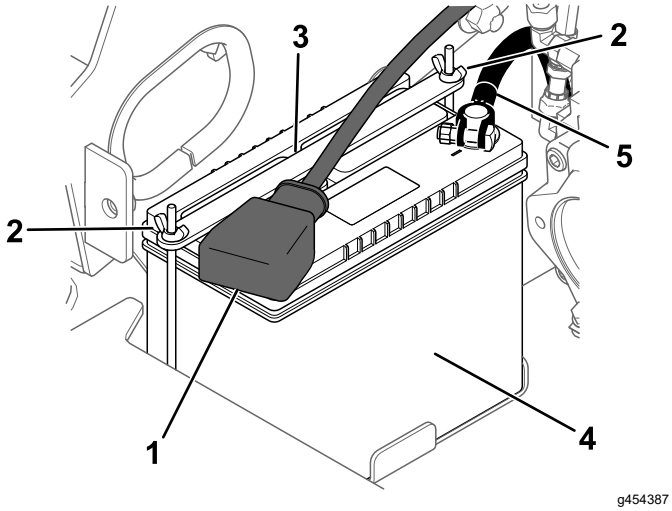

Figure 55

1. Positive cable
2. Wing nut and rod (2)
3. Strap
4. Battery
5. Negative cable

8. Slide the rubber cover off the positive (red) cable.
9. Disconnect the positive (red) cable from the battery post. Retain the fasteners.
10. Remove the wing nuts, rods, and strap.
11. Remove the battery.

Charging the Battery

⚠ WARNING

Charging the battery produces gasses that could explode, resulting in death or serious injury.

Never smoke near the battery and keep sparks and flames away from battery.

Important: **Always keep the battery fully charged (1.265 specific gravity). This is especially important to prevent battery damage when the temperature is below 0°C (32°F).**

1. Remove the battery from the machine; refer to Removing the Battery (page 40).
2. Charge the battery for 4 to 8 hours at a rate of 3 to 4 A (Figure 56). Do not overcharge the battery.

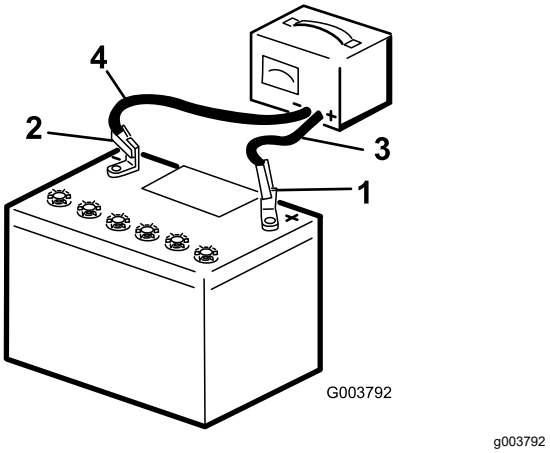

Figure 56

1. Positive battery post
2. Negative battery post
3. Red (+) charger lead
4. Black (-) charger lead

3. When the battery is fully charged, unplug the charger from the electrical outlet, then disconnect the charger leads from the battery posts (Figure 56).

Cleaning the Battery

Note: Keep the terminals and the entire battery case clean, to help extend battery life.

1. Park the machine on a level surface, lower the loader arms, and engage the parking brake.
2. Shut off the engine and remove the key.
3. Remove the battery from the machine; Removing the Battery (page 40).
4. Wash the entire case with a solution of baking soda and water.
5. Rinse the battery with clear water.
6. Coat the battery posts and cable connectors with Grafo 112X (skin-over) grease or petroleum jelly to prevent corrosion.
7. Install the battery; refer to Installing the Battery (page 42).

Installing the Battery

⚠ WARNING

Incorrect battery cable routing could damage the machine and cables, causing sparks. Sparks could cause the battery gasses to explode, resulting in death or serious injury.

Always connect the positive (red) battery cable before connecting the negative (black) cable.

1. Place the battery on the battery tray and secure it with the strap, wing nuts, and rods.

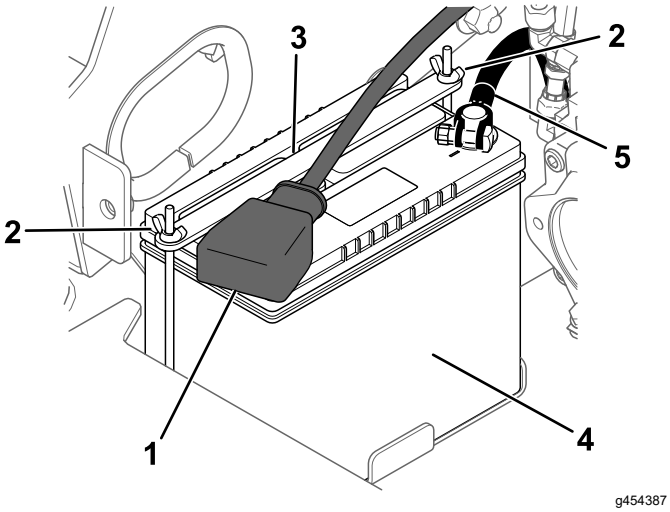

Figure 57

1. Positive cable
2. Wing nut and rod (2)
3. Strap
4. Battery
5. Negative cable

2. Using the fasteners previously removed, install the positive (red) battery cable to the positive (+) battery terminal.
3. Slide the red terminal boot onto the positive battery post.
4. Using the fasteners previously removed, install the negative (black) battery cable to the negative (-) battery terminal.
5. Install the front cover assembly.

Servicing a Replacement Battery

The original battery is maintenance-free and does not require service. For servicing a replacement battery, refer to the battery manufacturer's instructions.

Jump-Starting the Machine

⚠ WARNING

Jump-starting the battery can produce gasses that could explode, resulting in death or serious injury.

Do not smoke near the battery, and keep sparks and flames away from battery.

1. Park the machine on a level surface, lower the loader arms, and engage the parking brake.
2. Shut off the engine and remove the key.
3. Remove the front cover.
4. Check and clean corrosion from the battery terminals before jump-starting. Ensure that the connections are tight.

⚠ CAUTION

Corrosion or loose connections could cause unwanted electrical voltage spikes at any time during the jump-starting procedure, resulting in minor or moderate injury.

Do not attempt to jump-start the machine with loose or corroded battery terminals, or damage to the engine may occur.

⚠ DANGER

Jump-starting a weak battery that is cracked or frozen or has a low electrolyte level or an open/shorted battery cell could cause an explosion, resulting in death or serious injury.

Do not jump-start a weak battery if these conditions exist.

5. Make sure that the booster battery is a good and fully charged lead-acid battery at 12.6 V or greater.

   Note: Use properly sized jumper cables with short lengths to reduce voltage drop between systems. Make sure that the cables are color coded or labeled for the correct polarity.

⚠ WARNING

Batteries contain acid and produce explosive gasses, which could result in death or serious injury.

- **Shield your eyes and face from the batteries at all times.**
- **Do not lean over the batteries.**

Note: Ensure that the vent caps are tight and level. Place a damp cloth, if available, over any vent caps on both batteries. Also ensure that the machines do not touch and that both electrical systems are off and at the same rated system voltage. These instructions are for negative ground systems only.

6. Connect the positive (+) cable to the positive (+) terminal of the discharged battery that is wired to the starter or solenoid as shown.

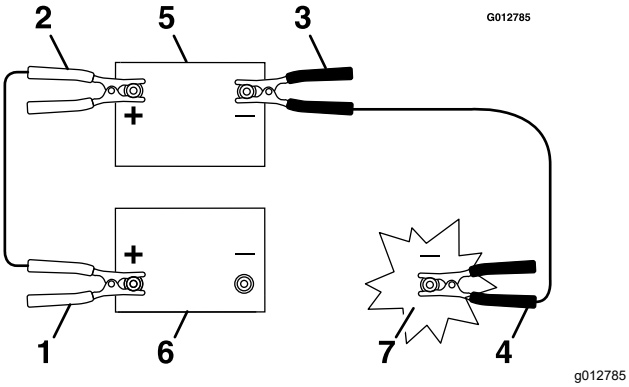

Figure 58

1. Positive (+) cable on discharged battery
2. Positive (+) cable on booster battery
3. Negative (–) cable on the booster battery
4. Negative (–) cable on the engine block
5. Booster battery
6. Discharged battery
7. Engine block

7. Connect the other end of the positive (+) jumper cable to the positive terminal of the battery in the other machine.
8. Connect an end of the negative (-) jumper cable to the negative post of the battery in the other machine.
9. Connect the other end of the negative (-) jumper cable to a ground point, such as an unpainted bolt or chassis member.
10. Start the engine in the other machine. Let it run a few minutes, then start your engine.
11. Remove the cables in the reverse order of connection.
12. Install the front cover.

Servicing the Fuses

The electrical system is protected by fuses. It requires no maintenance; however, if a fuse blows, check the component/circuit for a malfunction or a short.

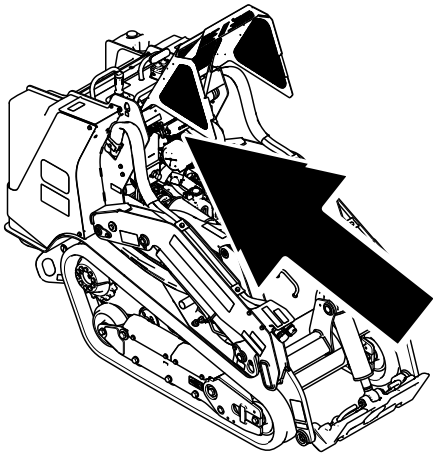

g617352

Figure 59

Fuse Layout

	1	2	3	4	5	6	7	8	9	10	11	12
A	X	X	X	X	X	X	Accessory (10 A)		System power (15 A)		System power 2 (7.5 A)	
B	X	X	X	X	X	X	Lights/USB (15 A)		Telematics (10 A)		System power 4 (7.5 A)	
C	X	X	X	X	X	X	Horn (20 A)		TDM 2002 (10 A)		System power 3 (7.5 A)	
D	X	X	X	X	X	X	X	X	(Relay)		(Relay)	
E	X	X	X	X	X	X	X	X				

Note: If the machine does not start, either the main circuit or the control panel/relay fuse could be blown.

Drive System Maintenance

Servicing the Tracks

Service Interval: After the first 8 hours—Check and adjust the track tension.

After the first 50 hours—Check and adjust the track tension.

Every 50 hours—Check and adjust the track tension.

Before each use or daily—Clean the tracks and check for excessive wear and proper tension.

Cleaning the Tracks

1. Park the machine on a level surface.
2. With the bucket installed and angled downward, lower it into the ground so that the front of the traction unit lifts off the ground a few centimeters (inches).
3. Engage the parking brake.
4. Shut off the engine and remove the key.
5. Using a water hose or pressure washer, remove dirt from each track system.

Important: **Ensure that you use high-pressure water to wash only the track area. Do not use a high-pressure washer to clean the rest of the traction unit. Do not use high pressure water between the drive sprocket and the traction unit or you may damage the motor seals. High-pressure washing can damage the electrical system and hydraulic valves or deplete grease.**

Important: **Ensure that you fully clean the road wheels, front wheel, rear wheel, and drive sprocket. The road wheels should rotate freely when clean.**

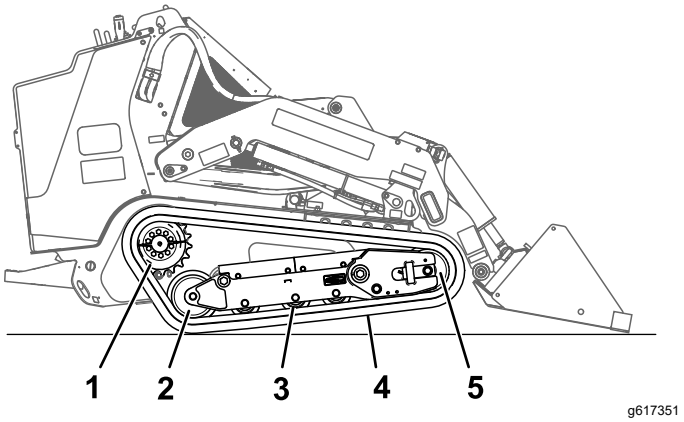

Figure 60

1. Sectional drive sprocket
2. Rear wheel
3. Road wheel (4)
4. Track
5. Front wheel

Checking and Adjusting the Track Tension

Lift/support 1 side of the machine and using the weight of the track, verify that the gap between the bottom of the lip of the road wheel and the track is 19 mm (3/4 inch). If it is not, adjust the track tension using the following procedure.

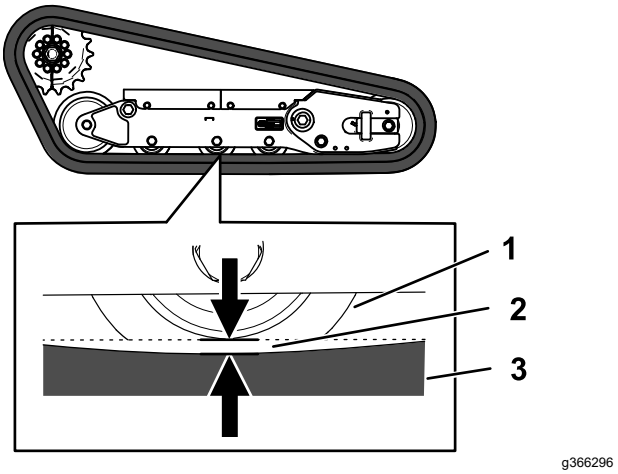

Figure 61

1. Road wheel
2. 19 mm (3/4 inch) gap
3. Track

1. Park the machine on a level surface, lower the loader arms, and engage the parking brake.
2. Shut off the engine and remove the key.
3. Raise the side of the machine that you are adjusting so that the track is off the ground.

4. Loosen the bolts on the rear cover and remove the cover.

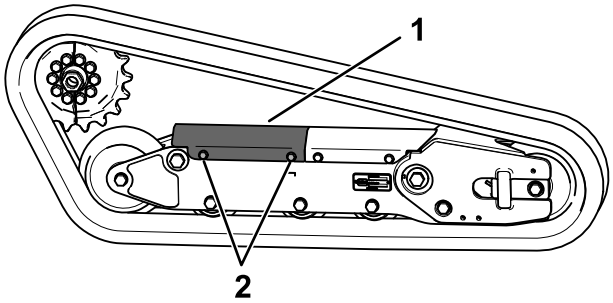

g366295

Figure 62

1. Rear cover 2. Bolt (2)

5. Loosen the jam nut and turn the tensioning screw clockwise until the track deflection is 19 mm (3/4 inch).

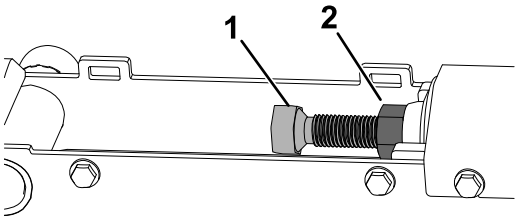

g363401

Figure 63

1. Tensioning screw 2. Jam nut

6. Tighten the jam nut.
7. Install the cover and tighten the bolts.
8. Repeat the procedure for the other track.
9. Drive the machine, then park the machine on a level surface, engage the parking brake, shut off the engine, and remove the key.
10. Verify that the track deflection is 19 mm (3/4 inch). Adjust if necessary.

Replacing the Tracks

Removing the Tracks

1. Remove any attachments.
2. Park the machine on a level surface, ensuring that only 1 sprocket half is engaged with the track.

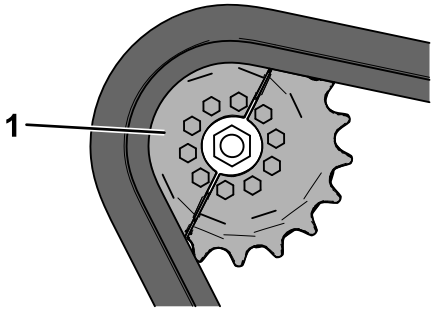

g366389

Figure 64

1. Sprocket half

3. Lower the loader arms.
4. Shut off the engine and remove the key.
5. Raise the machine off the ground so that the bottom of the track is at least 10.2 cm (4 inches) off the ground. Support the machine using jack stands.

   Note: Use jack stands rated for your machine.

   ⚠ WARNING

   Mechanical or hydraulic jacks could fail to support the machine, which could result in death or serious injury.

   Use jack stands when supporting the machine.

6. Loosen the bolts on the rear cover and remove the cover.

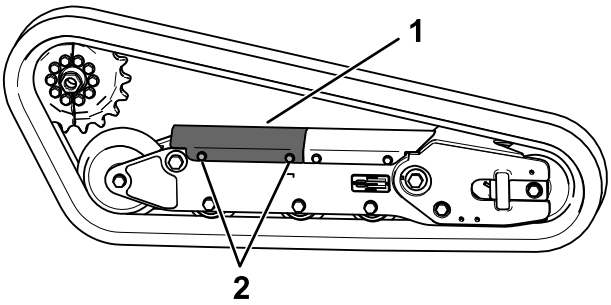

g366295

Figure 65

1. Rear cover 2. Bolt (2)

7. Loosen the jam nut and turn the tensioning screw to release the tension.

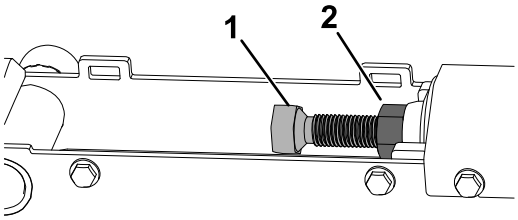

g363401

Figure 66

1. Tensioning screw
2. Jam nut

8. Remove the segment of the drive sprocket not engaged with the track.

   Important: **If you do not remove the sprocket segment, it may be difficult to install a new track without damaging it.**

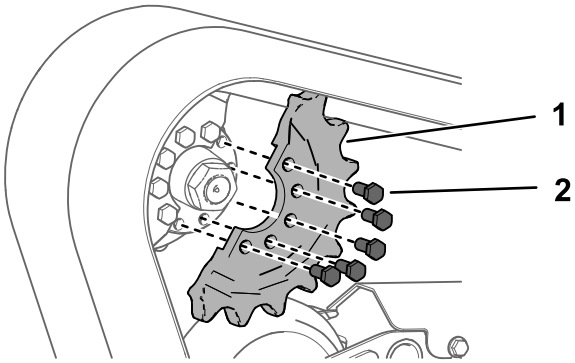

g366388

Figure 67

1. Sprocket half
2. Bolt (5)

9. Start the machine and disengage the parking brake.
10. Move the traction control forward until the other half of the drive sprocket is not engaged with the track

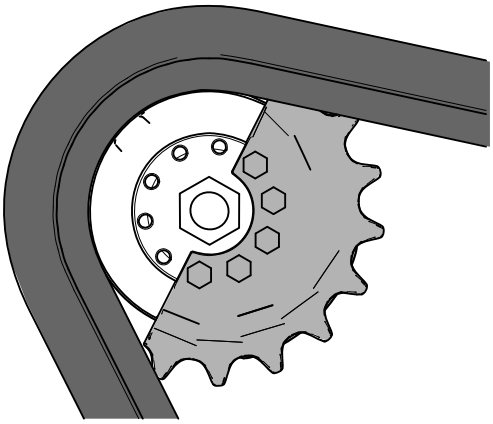

g366387

Figure 68

11. Shut off the engine and remove the key.
12. Remove the track from the track frame, drive hub, then front wheel.

Installing the Tracks

1. Wrap the new track around the front wheel.

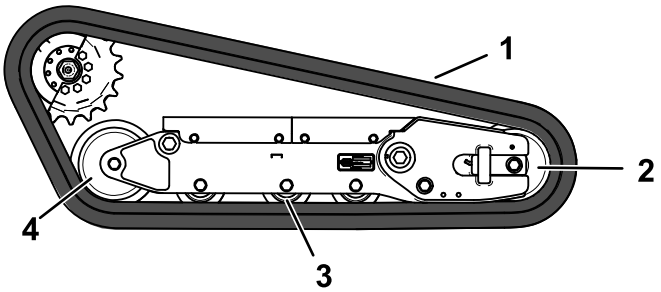

g366403

Figure 69

1. Track
2. Front wheel
3. Road wheel (4)
4. Rear wheel

2. Push the track under and between the road wheels and wrap it around the rear wheel.
3. Start the engine and disengage the parking brake.
4. Move the traction control forward until the drive sprocket half engages with the track.

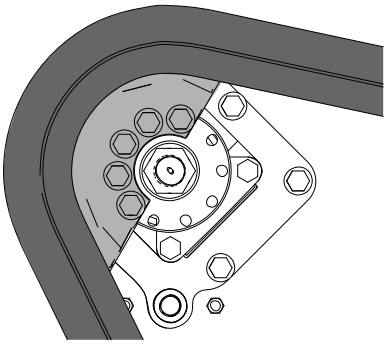

g366402

Figure 70

5. Shut off the engine and remove the key.

6. Apply thread-locking compound to the bolts of the drive sprocket half that you removed and install the other sprocket half. Torque the bolts to 80 to 99 N·m (59 to 73 ft-lb).

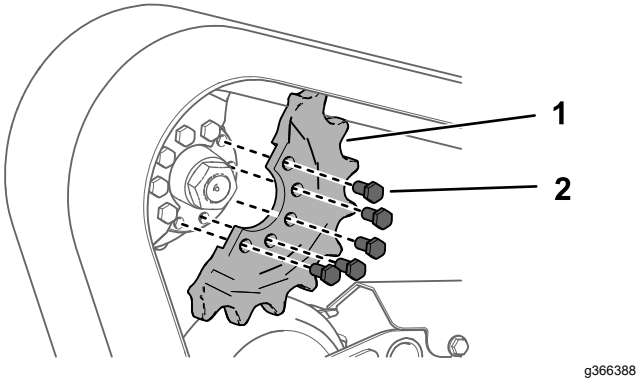

Figure 71

1. Sprocket half
2. Bolt (5)

7. Adjust the tensioning screw until the track deflection is 19 mm (3/4 inch).

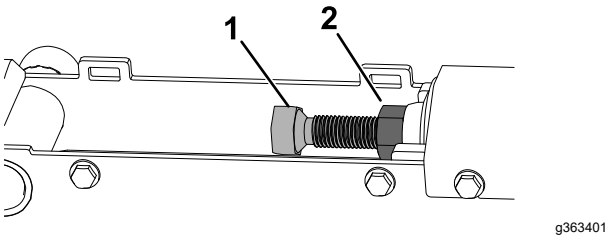

Figure 72

1. Tensioning screw
2. Jam nut

8. Tighten the jam nut.
9. Install the cover and tighten the bolts.
10. Repeat the procedure to replace the other track.
11. Lower the machine to the ground.
12. Drive the machine, then park the machine on a level surface, engage the parking brake, shut off the engine, and remove the key.
13. Verify that the track tension is correct; refer to Checking and Adjusting the Track Tension (page 45).

Cooling System Maintenance

Cooling System Safety

- Swallowing engine coolant can cause poisoning; keep out of reach from children and pets.
- Discharge of hot, pressurized coolant or touching a hot radiator and surrounding parts can cause severe burns.
  - Always allow the engine to cool at least 15 minutes before removing the radiator cap.
  - Use a rag when opening the radiator cap, and open the cap slowly to allow steam to escape.

Servicing the Cooling System

Service Interval: Before each use or daily—Clean the screen, oil cooler, and front of the radiator (more often in dirty or dusty conditions).

Before each use or daily—Check the coolant level in the expansion tank.

Every 100 hours—Check the cooling system hoses.

Cleaning the Radiator Screen

Service Interval: Before each use or daily

Remove any buildup of grass, dirt or other debris from the radiator screen with compressed air.

Checking the Engine-Coolant Level

Capacity: 4.4 L (4.6 US quarts)

Type: 50/50 solution of water and permanent ethylene-glycol antifreeze.

Important: **Do not remove the radiator cap in the rear of the machine unless the expansion tank is empty; otherwise coolant will leak out.**

1. Park the machine on a level surface, lower the loader arms, and engage the parking brake.
2. Shut off the engine, remove the key, and allow the engine to cool.
3. Open the hood.
4. Check the coolant level in the expansion tank.

   The coolant level should be at or above the mark on the side of the tank.

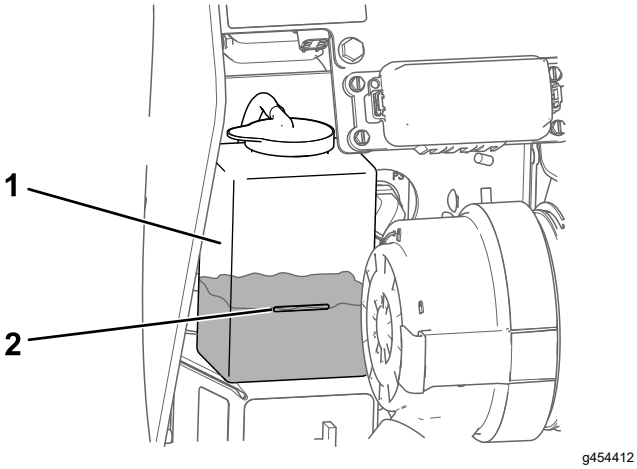

Figure 73

1. Expansion tank
2. Full mark

5. If the coolant level is low, remove the expansion tank cap and add a 50/50 mixture of water and permanent ethylene-glycol antifreeze.

   Important: **Do not overfill the expansion tank.**

6. Install the expansion-tank cap.
7. Close the hood.

Changing the Engine Coolant

Service Interval: Yearly

Have an Authorized Service Dealer change the engine coolant yearly.

If you need to add engine coolant, refer to Checking the Engine-Coolant Level (page 48).

Controls System Maintenance

Adjusting the Controls

The factory adjusts the controls before shipping the machine. However, after many hours of use, you may need to adjust the traction control alignment, the NEUTRAL position of the traction control, and the tracking of the traction control in the full forward position.

Contact your Authorized Service Dealer to adjust the controls of your machine.

Hydraulic System Maintenance

Hydraulic System Safety

- Seek immediate medical attention if fluid is injected into skin. Injected fluid must be surgically removed within a few hours by a doctor.
- Ensure that all hydraulic-fluid hoses and lines are in good condition and all hydraulic connections and fittings are tight before applying pressure to the hydraulic system.
- Keep your body and hands away from pinhole leaks or nozzles that eject high-pressure hydraulic fluid.
- Use cardboard or paper to find hydraulic leaks.
- Safely relieve all pressure in the hydraulic system before performing any work on the hydraulic system.

Relieving Hydraulic Pressure

To relieve hydraulic pressure while the engine is on, disengage the auxiliary hydraulics and fully lower the loader arms.

To relieve the pressure while the engine is off, turn the key switch to the RUN position, press and hold the bottom of the machine-enable switch, and cycle the loader-arm/attachment-tilt lever between the forward positions to lower the loader arms. With the key switch in the RUN position, press the auxiliary-hydraulic switch back and forth.

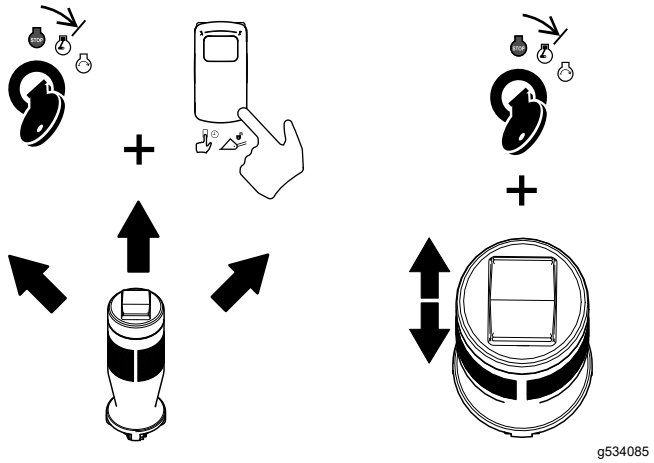

Figure 74

Hydraulic Fluid Specifications

Service Interval: Every 400 hours—Replace the hydraulic filter and fluid (if not using Toro fluid).

Every 1,000 hours—Replace the hydraulic filter and fluid (if using Toro fluid).

Hydraulic-System Capacity: 43.5 L (11.5 US gallons)

Recommended hydraulic fluid: Toro PX Extended Life Hydraulic Fluid

Note: A machine using the recommended replacement fluid requires less frequent fluid and filter changes.

Alternative hydraulic fluids: If Toro PX Extended Life Hydraulic Fluid is not available, you may use another conventional, petroleum-based hydraulic fluid having specifications that fall within the listed range for all the following material properties and that it meets industry standards. Do not use synthetic fluid. Consult with your lubricant distributor to identify a satisfactory product.

Note: Toro does not assume responsibility for damage caused by improper substitutions, so use products only from reputable manufacturers who will stand behind their recommendation.

High Viscosity Index/Low Pour Point Anti-wear Hydraulic Fluid, ISO VG 46

Material Properties:	
Viscosity, ASTM D445	cSt @ 40°C (104°F) 44 to 48
Viscosity Index ASTM D2270	140 or higher
Pour Point, ASTM D97	-37°C to -45°C (-34°F to -49°F)
Industry Specifications:	Eaton Vickers 694 (I-286-S, M-2950-S/35VQ25 or M-2952-S)

Note: Many hydraulic fluids are almost colorless, making it difficult to spot leaks. A red dye additive for the hydraulic fluid is available in 20 ml (0.67 fl oz) bottles. A bottle is sufficient for 15 to 22 L (4 to 6 US gallons) of hydraulic fluid. Order Part No. 44-2500 from your Authorized Service Dealer.

Checking the Hydraulic-Fluid Level

Service Interval: Before each use or daily

Important: **Always use the correct hydraulic fluid. Unspecified fluids will damage the hydraulic system. Refer to Hydraulic Fluid Specifications (page 50).**

1. Remove any attachments.
2. Park the machine on a level surface.
3. Fully lower the loader arms and curl the attachment plate back.
4. Engage the parking brake.
5. Shut off the engine and remove the key.
6. Look into the glass bubble on the right side of the machine. If you cannot see hydraulic fluid in the bubble, add fluid as follows:

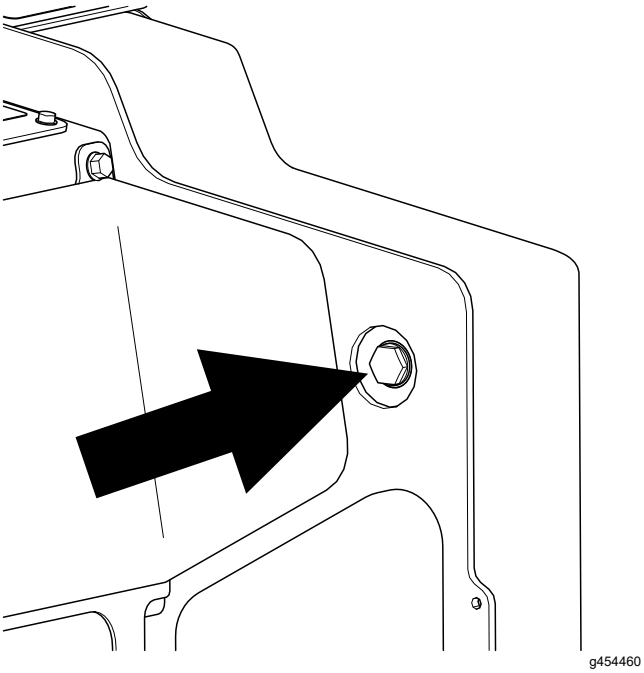

Figure 75

A. Remove the bolt and nut.

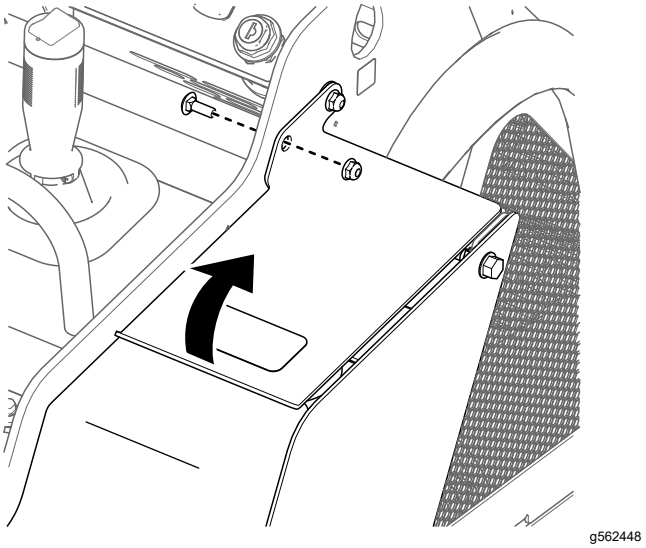

Figure 76

B. Raise the bracket.

C. Clean the area around the filler cap and remove it.

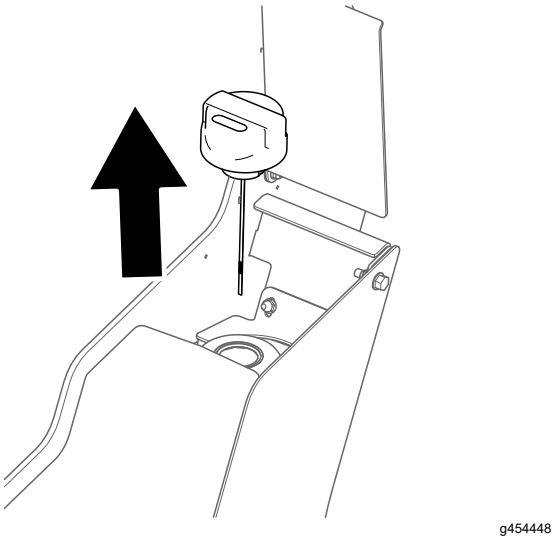

Figure 77

D. Add hydraulic fluid until it is visible in the glass bubble.

E. Install the filler cap.

F. Lower the bracket and secure it with the bolt and nut.

Replacing the Hydraulic Filter

Important: **Do not substitute an automotive oil filter; otherwise, severe hydraulic system damage may occur.**

1. Remove any attachments.
2. Park the machine on a level surface.
3. Raise the loader arms and install the cylinder lock.
4. Engage the parking brake.
5. Shut off the engine, remove the key, and allow the engine to cool.
6. Remove the front access plate.
7. Place a drain pan under the filter and replace the filter.

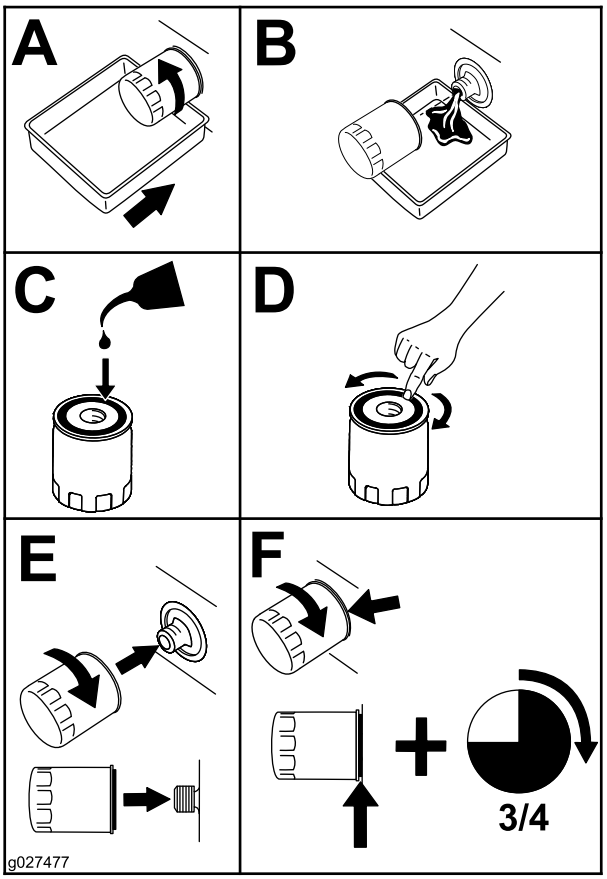

g027477

Figure 78

8. Clean up any spilled fluid.
9. Start the engine and let it run for about 2 minutes to purge air from the system.
10. Shut off the engine and check for leaks.
11. Check the fluid level in the hydraulic tank; refer to Checking the Hydraulic-Fluid Level (page 51) and add fluid to raise the level to mark on dipstick.

    Important: **Do not overfill the tank.**
12. Install the front cover.
13. Remove and store the cylinder lock and lower the loader arms.

Changing the Hydraulic Fluid

1. Park the machine on a level surface, lower the loader arms, and engage the parking brake.
2. Shut off the engine and remove the key.
3. Place a large drain pain capable of holding 57 L (15 US gallons) under the drain plug on the hydraulic tank.

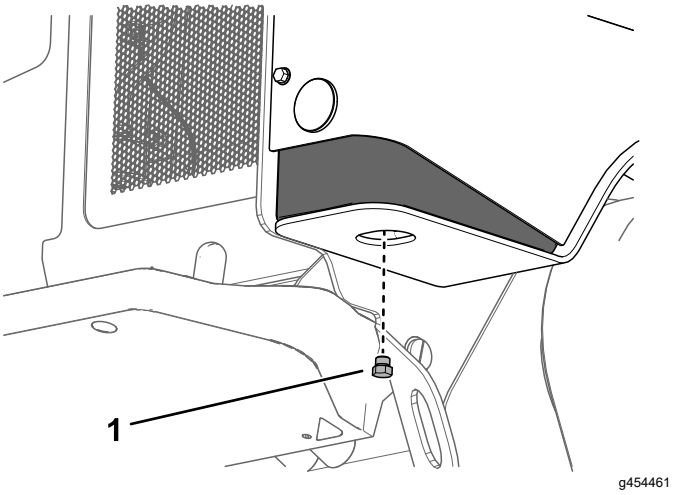

Figure 79

1. Drain plug

4. Remove the drain plug and allow the oil to drain into the pan.
5. When the oil is finished draining, install and tighten the drain plug.

   Note: Dispose of the used oil at a certified recycling center.
6. Fill the hydraulic tank with hydraulic fluid; refer to Hydraulic Fluid Specifications (page 50).
7. Start the engine and let it run for a few minutes.
8. Shut off the engine and remove the key.
9. Check the hydraulic-fluid level and add fluid to fill the tank if necessary; refer to Checking the Hydraulic-Fluid Level (page 51).

Cleaning

Removing Debris

Service Interval: Before each use or daily

Important: **Operating the engine with blocked screens and/or cooling shrouds removed will result in engine damage from overheating.**

1. Park the machine on a level surface, lower the loader arms, and engage the parking brake.
2. Shut off the engine, remove the key, and allow the engine to cool.
3. Open the hood.
4. Clean any debris from the front and side screens.
5. Wipe away debris from the air cleaner.
6. Clean any debris buildup on the engine and in the oil cooler fins with a brush or blower.

   Important: **Operating the engine with blocked screens and/or cooling shrouds removed will result in engine damage due to overheating.**
7. Clean debris from the hood opening, muffler, heat shields, and radiator screen (if applicable).
8. Close the hood.

Washing the Machine

When pressure washing the machine, do the following:

- Wear appropriate personal protective equipment for the pressure washer.
- Keep all guards in place on the machine.
- Avoid spraying at electronic components.
- Avoid spraying at edges of decals.
- Spray the exterior of the machine only. Do not spray directly into openings in the machine.
- Spray only the dirty parts of the machine.
- Use a 40-degree or larger spray nozzle. 40-degree nozzles are usually white.
- Keep the tip of the pressure washer at least 61 cm (2 ft) away from the surface being washed.
- Use only pressure washers with pressure below 13790 kpa (2000 psi) and flow below 7.6 L (2 US gallons) per minute.
- Replace damaged or peeling decals.
- Grease all grease points after washing; refer to Greasing the Machine (page 34).

Cleaning the Chassis

Service Interval: Every 100 hours—Check for dirt buildup in the chassis. (More often in dirty conditions.)

Over time, the chassis under the engine collects dirt and debris that must be removed. Using a flashlight, open the hood and inspect the area under the engine regularly. When the debris is 2.5 to 5 cm (1 to 2 inches) deep, clean the chassis.

1. Park the machine on a level surface, lower the loader arms, and engage the parking brake.
2. Shut off the engine and remove the key.
3. Raise the front of the machine so that the machine is angled backward.
4. Remove the bottom plate; refer to Removing the Bottom Plate (page 32).
5. Remove the front cover assembly; refer to Removing the Front Cover Assembly (page 32).
6. Spray water into the chassis to clean out the dirt and debris.

   Note: The water will drain at the back of the machine.

   Important: **Do not spray water into the engine.**
7. Grease the machine; refer to Greasing the Machine (page 34).
8. Install the bottom plate.
9. Install the front cover assembly.
10. Lower the machine.

Storage

Storage Safety

- Shut off the engine, remove the key, wait for all moving parts to stop, and allow the machine to cool before storing it.
- Do not store the machine or fuel near flames.

Storage

1. Park the machine on a level surface, lower the loader arms, and engage the parking brake.
2. Shut off the engine and remove the key.
3. Remove dirt and grime from the entire machine.

   Important: **You can wash the machine with mild detergent and water. Do not pressure-wash the machine. Avoid excessive use of water, especially near the control panel, engine, hydraulic pumps, and motors.**
4. Service the air cleaner; refer to Servicing the Air-Cleaner (page 34).
5. Grease the machine; refer to Greasing the Machine (page 34).
6. Change the engine oil; refer to Servicing the Engine Oil (page 36).
7. Charge the battery; refer to Charging the Battery (page 41).
8. Check and adjust the track tension; refer to Checking and Adjusting the Track Tension (page 45).
9. Check and tighten all fasteners. Repair or replace any worn, damaged, or missing parts.
10. Paint all scratched or bare metal surfaces with paint available from your Authorized Service Dealer.
11. Store the machine in a clean, dry garage or storage area. Remove the key from the ignition switch and keep it in a memorable place.
12. Disconnect the battery; refer to Using the Battery-Disconnect Switch (page 40).
13. Cover the machine to protect it and keep it clean.

Troubleshooting

Problem	Possible Cause	Corrective Action
The engine does not start.	1. Dirt, water, stale fuel, or incorrect fuel is in the fuel system. 2. The fuel filter is clogged. 3. The improper fuel grade for cold weather is in the machine. 4. The battery is discharged.	1. Drain and flush the fuel system; add fresh fuel. 2. Replace the fuel filter. 3. Drain the fuel system and replace the fuel filter. Add fresh fuel of proper grade for ambient temperature conditions. You may need to warm the entire traction unit. 4. Charge the battery or replace it.
The engine loses power.	1. The fuel tank is empty. 2. There is air in the fuel. 3. The engine is overheating. 4. The engine load is excessive. 5. The crankcase-oil level is incorrect. 6. The air-cleaner filters are dirty.	1. Fill the tank with fresh fuel. 2. Bleed the fuel system and check for air leaks at fuel hose connections and fittings between the fuel tank and engine. 3. Refer to “The engine overheats.” 4. Reduce the load; use a lower ground speed. 5. Fill or drain to the Full mark. 6. Service the air filters.
The engine starts but does not keep running.	1. The fuel tank is empty. 2. There is air in the fuel. 3. The engine is overheating. 4. The air-cleaner filters are dirty.	1. Fill the tank with fresh fuel. 2. Bleed the fuel system and check for air leaks at fuel hose connections and fittings between the fuel tank and engine. 3. Refer to “The engine overheats.” 4. Service the air filters.
The engine overheats.	1. The crankcase-oil level is incorrect. 2. The alternator belt is broken or elongated. 3. More coolant is needed. 4. Concentration of antifreeze is too high. 5. There is restricted air flow to the radiator. 6. The inside of the radiator is corroded. 7. The radiator or radiator cap is damaged. 8. The thermostat is defective. 9. The temperature gauge or sensor is defective. 10. The engine load is excessive. 11. The head gasket is damaged or there is water leakage.	1. Fill or drain to the Full mark. 2. Replace the belt or adjust the belt tension. 3. Check and add coolant. 4. Add water only or change to coolant with the specified mixing ratio. 5. Inspect and clean the radiator screen. 6. Clean or replace the radiator and parts. 7. Replace the damaged parts. 8. Check the thermostat and replace it if necessary. 9. Check the temperature with a thermometer and replace the gauge or sensor if necessary. 10. Reduce the load; use a lower ground speed. 11. Replace damaged parts.

Problem	Possible Cause	Corrective Action
The machine does not drive.	1. The parking brake is engaged.	1. Disengage the parking brake.
	2. The hydraulic-fluid level is low.	2. Add hydraulic fluid to the reservoir.
	3. The hydraulic system is damaged.	3. Contact your Authorized Service Dealer.
	4. The bypass valves are open.	4. Close the bypass valves.
	5. A traction pump drive coupler is loose or broken.	5. Contact your Authorized Service Dealer.
	6. Pump and/or wheel motor is damaged.	6. Contact your Authorized Service Dealer.
	7. The control valve is damaged.	7. Contact your Authorized Service Dealer.
	8. The relief valve is damaged.	8. Contact your Authorized Service Dealer.
	9. The cooling fans are damaged or disconnected.	9. Check fan connections or replace damaged parts.

Notes:

Notes:

California Proposition 65 Warning Information

What is this warning?

You may see a product for sale that has a warning label like the following:

WARNING: Cancer and Reproductive Harm—www.p65Warnings.ca.gov.

What is Prop 65?

Prop 65 applies to any company operating in California, selling products in California, or manufacturing products that may be sold in or brought into California. It mandates that the Governor of California maintain and publish a list of chemicals known to cause cancer, birth defects, and/or other reproductive harm. The list, which is updated annually, includes hundreds of chemicals found in many everyday items. The purpose of Prop 65 is to inform the public about exposure to these chemicals.

Prop 65 does not ban the sale of products containing these chemicals but instead requires warnings on any product, product packaging, or literature with the product. Moreover, a Prop 65 warning does not mean that a product is in violation of any product safety standards or requirements. In fact, the California government has clarified that a Prop 65 warning "is not the same as a regulatory decision that a product is 'safe' or 'unsafe.'" Many of these chemicals have been used in everyday products for years without documented harm. For more information, go to https://oag.ca.gov/prop65/faqs-view-all.

A Prop 65 warning means that a company has either (1) evaluated the exposure and has concluded that it exceeds the "no significant risk level"; or (2) has chosen to provide a warning based on its understanding about the presence of a listed chemical without attempting to evaluate the exposure.

Does this law apply everywhere?

Prop 65 warnings are required under California law only. These warnings are seen throughout California in a wide range of settings, including but not limited to restaurants, grocery stores, hotels, schools, and hospitals, and on a wide variety of products. Additionally, some online and mail order retailers provide Prop 65 warnings on their websites or in catalogs.

How do the California warnings compare to federal limits?

Prop 65 standards are often more stringent than federal and international standards. There are various substances that require a Prop 65 warning at levels that are far lower than federal action limits. For example, the Prop 65 standard for warnings for lead is 0.5 µg/day, which is well below the federal and international standards.

Why don't all similar products carry the warning?

- Products sold in California require Prop 65 labelling while similar products sold elsewhere do not.
- A company involved in a Prop 65 lawsuit reaching a settlement may be required to use Prop 65 warnings for its products, but other companies making similar products may have no such requirement.
- The enforcement of Prop 65 is inconsistent.
- Companies may elect not to provide warnings because they conclude that they are not required to do so under Prop 65; a lack of warnings for a product does not mean that the product is free of listed chemicals at similar levels.

Why does Toro include this warning?

Toro has chosen to provide consumers with as much information as possible so that they can make informed decisions about the products they buy and use. Toro provides warnings in certain cases based on its knowledge of the presence of one or more listed chemicals without evaluating the level of exposure, as not all the listed chemicals provide exposure limit requirements. While the exposure from Toro products may be negligible or well within the "no significant risk" range, out of an abundance of caution, Toro has elected to provide the Prop 65 warnings. Moreover, if Toro does not provide these warnings, it could be sued by the State of California or by private parties seeking to enforce Prop 65 and subject to substantial penalties.

TORO®

Count on it.