Form No. 3484-956 Rev A

TORO®

Count on it.

Operator's Manual

eDingo® TX 750 Compact Tool Carrier

Model No. 22230—Serial No. 4222000000 and Up
Model No. 22230G—Serial No. 4222000000 and Up
Model No. 22231—Serial No. 422200000 and Up

Register at www.Toro.com.
Original Instructions (EN)

3484-956

This device complies with Part 15 of the FCC Rules. Operation is subject to the following conditions: (1) this device may not cause harmful interference, and (2) this device must accept any interference received, including interference that may cause undesired operation. Changes or modifications not expressly approved by Toro could void the user's authority to operate the equipment.

In addition, while in charging mode this equipment has been tested and found to comply with the limits for a Class B digital device, pursuant to Part 15 of the FCC rules. These limits are designed to provide reasonable protection against harmful interference in a residential installation. This equipment generates, uses and can radiate radio frequency energy and, if not installed and used in accordance with the instructions, may cause harmful interference to radio communications. However, there is no guarantee that interference will not occur in a particular installation. If this equipment does cause harmful interference to radio or television reception, which can be determined by turning the equipment off and on, the user is encouraged to try to correct the interference by one or more of the following measures:

- Reorient or relocate the receiving antenna.
- Increase the separation between the equipment and receiver.
- Connect equipment into an outlet on a circuit different from that to which the receiver is connected.
- Consult the dealer or an experienced radio/TV technician for help.

⚠ WARNING

CALIFORNIA
Proposition 65 Warning

The power cord on this product contains lead, a chemical known to the State of California to cause birth defects or other reproductive harm. Wash hands after handling.

Battery posts, terminals, and related accessories contain lead and lead compounds, chemicals known to the State of California to cause cancer and reproductive harm. Wash hands after handling.

Use of this product may cause exposure to chemicals known to the State of California to cause cancer, birth defects, or other reproductive harm.

Introduction

This machine is a compact tool carrier intended for use in various earth and materials moving activities for landscaping and construction work. It is designed to operate a wide variety of attachments, each of which perform a specialized function. Using this product for purposes other than its intended use could prove dangerous to you and bystanders. Do not modify the machine or attachments.

This machine should be operated, serviced, and repaired only by professionals familiar with its characteristics and acquainted with the relevant safety procedures.

Operate this machine in ambient temperatures from -18 to 38°C (0 to 100 °F). Contact your Authorized Service Dealer for provisions required for operating in extreme temperatures.

Read this information carefully to learn how to operate and maintain your product properly and to avoid injury and product damage. You are responsible for operating the product properly and safely.

Visit www.Toro.com for product safety and operation training materials, accessory information, help finding a dealer, or to register your product.

Whenever you need service, genuine Toro parts, or additional information, contact an Authorized Service Dealer or Toro Customer Service and have the model and serial numbers of your product ready. Figure 1 identifies the location of the model and serial numbers on the product. Write the numbers in the space provided.

Important: **With your mobile device, you can scan the QR code on the serial number decal (if equipped) to access warranty, parts, and other product information.**

© 2026—The Toro® Company
8111 Lyndale Avenue South
Bloomington, MN 55420

Contact us at www.Toro.com.
Printed in the USA
All Rights Reserved

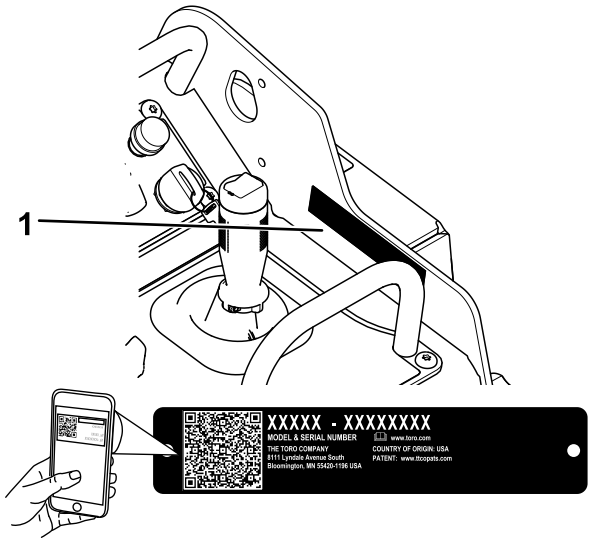

g619847

Figure 1

1. Model and serial number location

Model No. _____

Serial No. _____

This manual identifies potential hazards and has safety messages identified by the safety-alert symbol (Figure 2), which signals a hazard that may cause serious injury or death if you do not follow the recommended precautions.



g000502

Figure 2

Safety-alert symbol

This manual uses 2 words to highlight information. **Important** calls attention to special mechanical information and **Note** emphasizes general information worthy of special attention.

The safety-alert symbol appears above information that alerts you to unsafe actions or situations and is followed by the word **DANGER**, **WARNING**, or **CAUTION**.

DANGER indicates an imminently hazardous situation which, if not avoided, **will** result in death or serious injury.

WARNING indicates a potentially hazardous situation which, if not avoided, **could** result in death or serious injury.

CAUTION indicates a potentially hazardous situation which, if not avoided, **may** result in minor or moderate injury.

This manual uses two other words to highlight information. **Important** calls attention to special mechanical information and **Note** emphasizes general information worthy of special attention.

Contents

Safety 4
General Safety 4
Safety and Instructional Decals 6
Product Overview 12
Controls 13
InfoCenter Display 14
Specifications 17
Attachments/Accessories 17
Before Operation 18
Before Operation Safety 18
Performing Daily Maintenance 18
During Operation 18
During Operation Safety 18
Starting the Machine 20
Shutting Off the Machine 20
Sleep Mode 20
Using Attachments 20
Using the Operator Platform 22
After Operation 23
After Operation Safety 23
Lifting the Machine 24
Retrieving a Stuck Machine 25
Moving a Non-Functioning Machine 25
Hauling the Machine 25
Transporting the Lithium-Ion Batteries 27
Using the Battery Charger 27
Charging the Batteries 27
Maintenance 29
Maintenance Safety 29
Recommended Maintenance Schedule(s) 30
Pre-Maintenance Procedures 31
Using the Cylinder Lock 31
Accessing Internal Components 32
Releasing the Rear Cushion 32
Removing the Rear Cover 32
Lubrication 33
Greasing the Machine 33
Electrical System Maintenance 33
Electrical System Safety 33
Using the Battery-Disconnect Switch 33
Servicing the Lead-Acid Battery 34
Servicing the Lithium-Ion Batteries 36
Servicing the Fuses 37
Drive System Maintenance 38
Servicing the Tracks 38
Drive-Motor Gear Oil Specifications 42

Checking the Drive-Motor Gear Oil 42
Changing the Drive-Motor Gear Oil 44
Controls System Maintenance 45
Adjusting the Controls 45
Hydraulic System Maintenance 45
Hydraulic System Safety 45
Relieving Hydraulic Pressure 45
Lowering the Loader Arms Without Power 46
Hydraulic Fluid Specifications 46
Checking the Hydraulic-Fluid Level 47
Replacing the Hydraulic Filter 48
Changing the Hydraulic Fluid 48
Cleaning 49
Removing Debris 49
Washing the Machine 49
Storage 50
Storage Safety 50
Storing the Machine 50
Battery Storage Requirements 50
Troubleshooting 51

Safety

General Safety

⚠ DANGER

There may be buried utility lines in the work area. Digging into them may cause a shock or an explosion.

Have the property or work area marked for buried lines and do not dig in marked areas. Contact your local marking service or utility company to have the property marked (for example, in the US, call 811 or in Australia, call 1100 for the nationwide marking service).

Always follow all safety instructions to avoid serious injury or death. Using this product for purposes other than its intended use could prove dangerous to you and bystanders.

- Do not exceed the rated operating capacity, as the machine may become unstable, which may result in loss of control.
- Do not carry a load with the arms raised; always carry loads close to the ground.
- Slopes are a major factor related to loss-of-control and tip-over accidents, which can result in severe injury or death. **Operating the machine on any slope or uneven terrain requires extra caution.**
- **Operate the machine up and down slopes with the heavy end of the machine uphill and the load close to the ground.** Weight distribution changes with attachments. An empty bucket makes the rear of the machine the heavy end, and a full bucket makes the front of the machine the heavy end. Most other attachments make the front of the machine the heavy end.
- Have the property or work area marked for buried lines and other objects, and do not dig in marked areas.
- Read and understand the content of this *Operator's Manual* before starting the machine.

- Use your full attention while operating the machine. Do not engage in any activity that causes distractions; otherwise, injury or property damage may occur.
- Never allow children or untrained people to operate the machine.
- Keep your hands and feet away from the moving components and attachments.
- Do not operate the machine without the guards and other safety protective devices in place and working on the machine.
- Keep bystanders and children out of the operating area.
- Stop the machine, shut off the machine, and remove the key before servicing or unclogging the machine.

Improperly using or maintaining this machine can result in injury. To reduce the potential for injury, comply with these safety instructions and always pay attention to the safety-alert symbol ⚠, which means Caution, Warning, or Danger—personal safety instruction. Failure to comply with these instructions may result in personal injury or death.

Safety and Instructional Decals

Safety decals and instructions are easily visible to the operator and are located near any area of potential danger. Replace any decal that is damaged or missing.

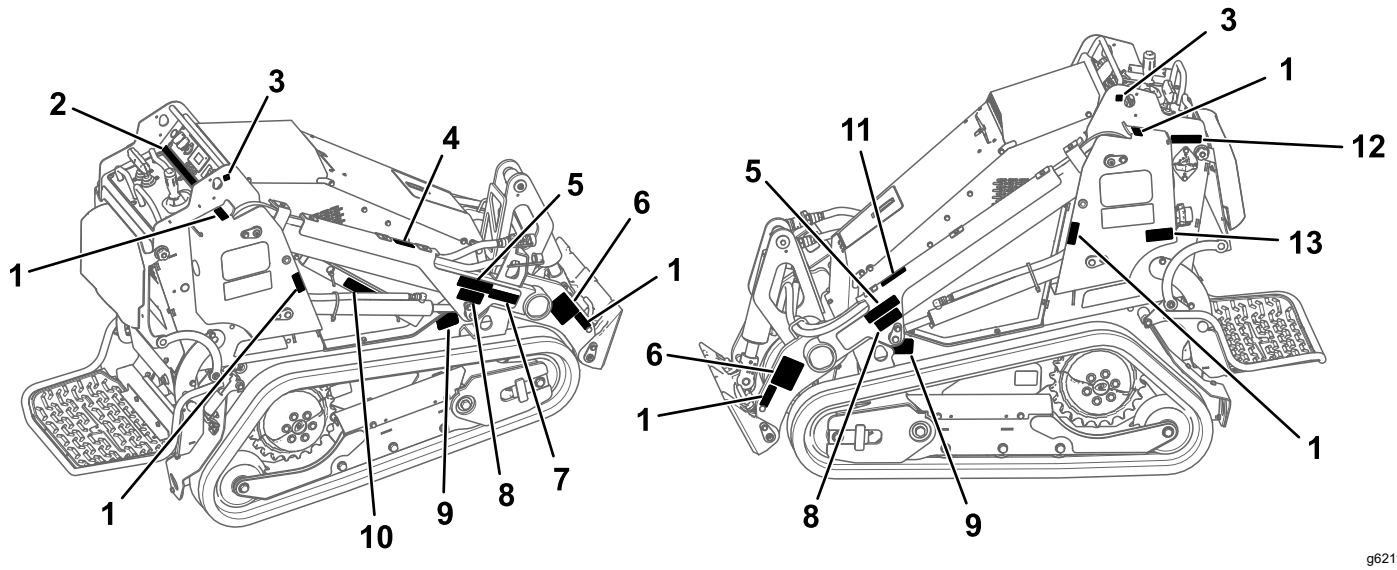

Figure 3
Safety Decal Locations

1. 120-0625
2. 161-8010
3. 93-9084
4. 139-1173
5. 139-1158
6. 145-3252
7. 115-4855
8. 139-1159
9. 125-6139
10. 115-4858
11. 130-2837
12. 145-1175
13. 161-2443



decal133-8061

133-8061

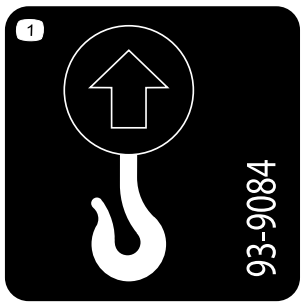

decal93-9084

93-9084

1. Lift point

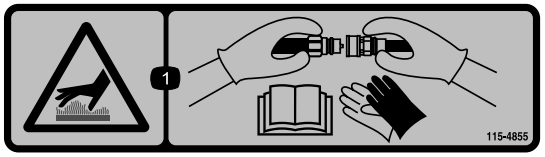

decal115-4855

115-4855

1. Hot surface/burn hazard—wear protective gloves when handling the hydraulic couplers and read the *Operator's Manual* for information on handling hydraulic components.

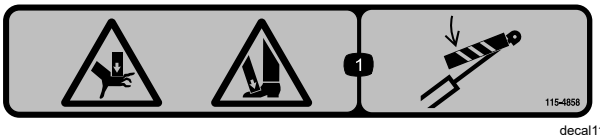

decal115-4858

115-4858

1. Crushing hazard of hands or feet—install the cylinder lock.

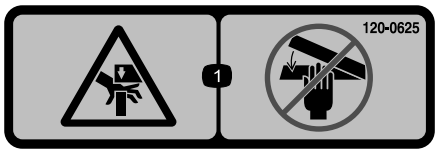

decal120-0625

120-0625

1. Pinch point, hand—keep hands away.

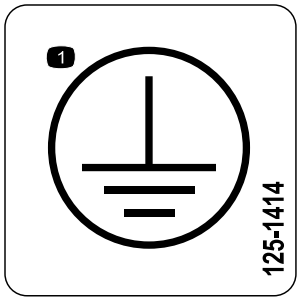

decal125-1414

125-1414

1. Earth (ground) terminal location

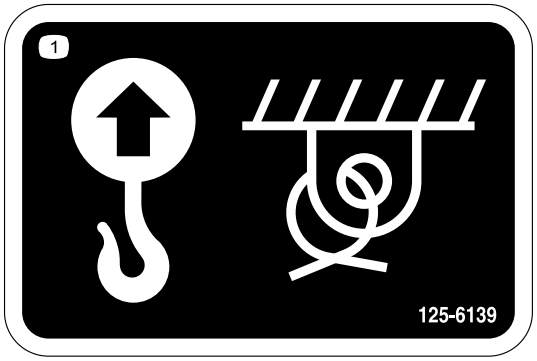

decal125-6139

125-6139

1. Lift point and tie-down point



decal130-2837

130-2837

1. Warning—do not carry passengers in the bucket.

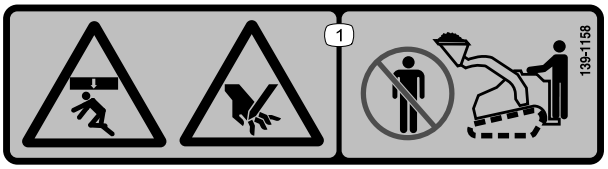

decal139-1158

139-1158

1. Crushing hazard, from above, and pinching hazard—stay away from the bucket and loading arms.

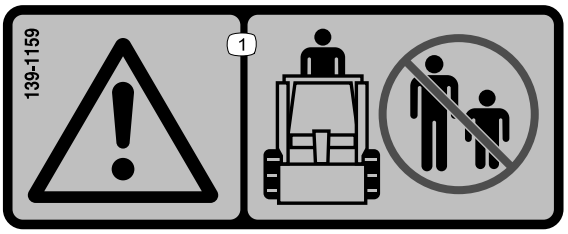

decal139-1159

139-1159

1. Warning—keep bystanders away.

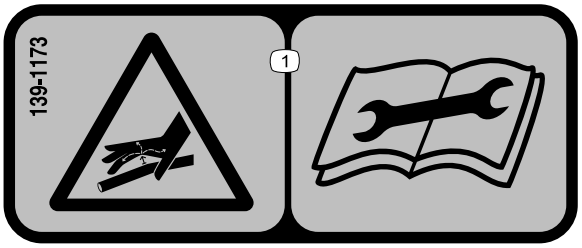

decal139-1173

139-1173

1. High-pressure fluid hazard, injection into the body—read the *Operator's Manual* before performing maintenance.

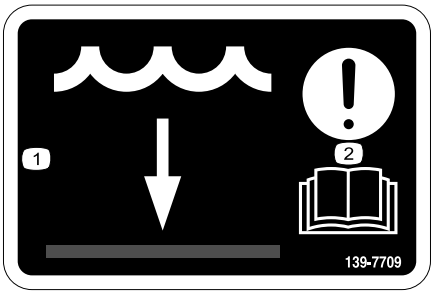

decal139-7709

139-7709

1. Water level
2. Attention—read the *Operator's Manual*.



decal144-0275

144-0275

1. Batteries are flammable.

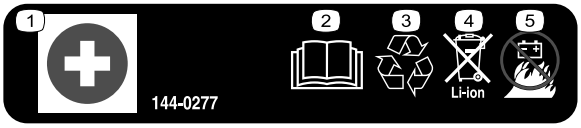

decal144-0277

144-0277

1. Positive terminal
2. Read the *Operator's Manual*.
3. Recycle the battery.
4. Do not dispose improperly.
5. Do not expose to fire.

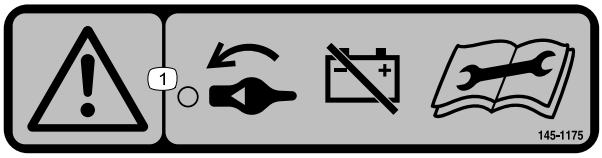

decal145-1175

145-1175

1. Warning—turn the battery disconnect switch to the OFF position before performing maintenance.

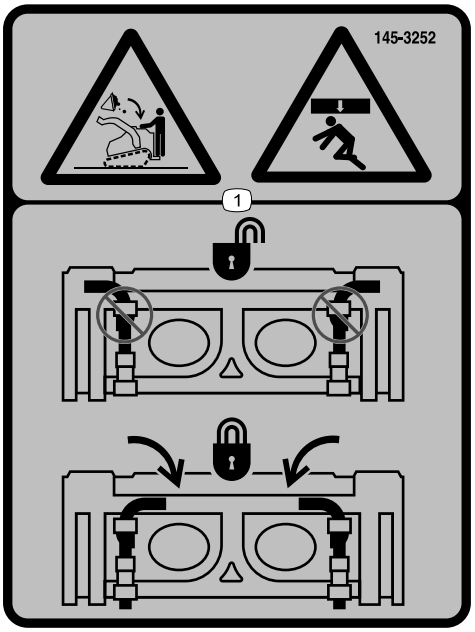

decal145-3252

145-3252

1. Crushing hazard from above, falling load—ensure that the quick-attach pins are locked.

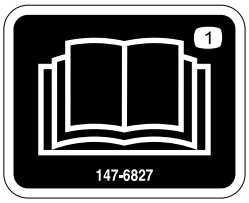

decal147-6827

147-6827

1. Read the *Operator's Manual*.

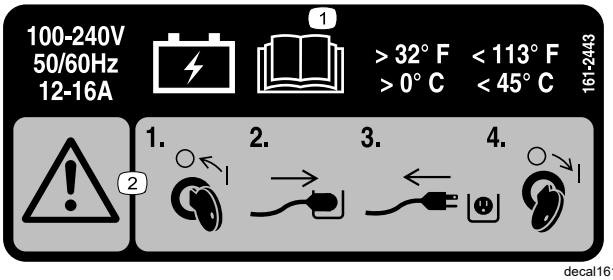

decal161-2443

161-2443

1. Read the *Operator's Manual* for charging information.
2. Warning—1) Turn the key to the OFF position; 2) Plug in the power-supply cord; 3) Unplug the power-supply cord; 4) Turn the key to the ON position.

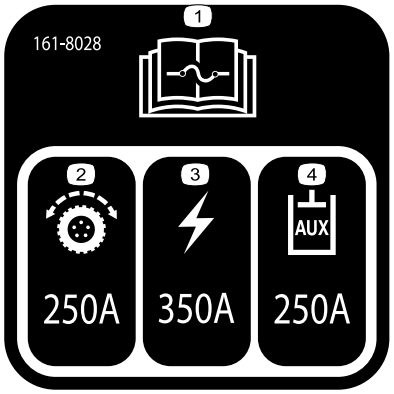

decal161-8028

161-8028

1. Refer to the *Operator's Manual* for fuse information
2. Traction
3. Power
4. Auxiliary hydraulics



decal145-5338

145-5338

1. Warning—read the *Operator's Manual*.
2. Warning—do not open the battery; do not use a damaged battery.
3. Explosion hazard—do not expose to sparks or open flame.
4. Electric shock hazard—do not perform maintenance on the battery.
5. Electric shock hazard

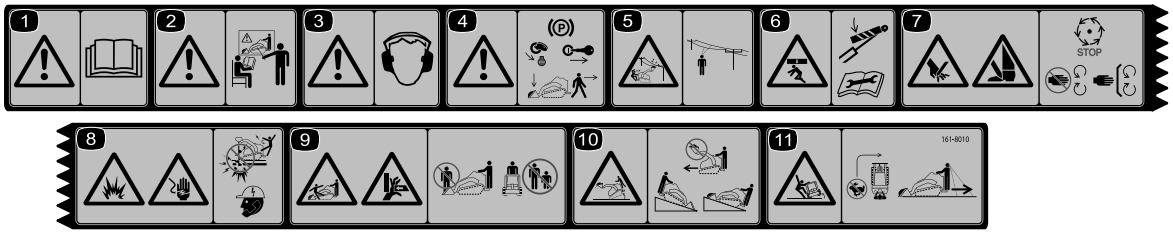

decal161-8010

161-8010

1. Warning—read the *Operator's Manual*.
2. Warning—all operators should be trained before operating the machine.
3. Warning—wear hearing protection.
4. Warning—engage the parking brake, lower any attachments, turn the key to the off position, and remove the key before leaving the machine.
5. Electrical shock hazard, overhead power lines—watch for overhead power lines.
6. Crushing hazard from above—install the cylinder lock before performing maintenance.
7. Cutting hazard of hands or feet—wait for all moving parts to stop before servicing; stay away from moving parts; keep all guards and shields in place.
8. Explosion hazard; electrical shock hazard—do not dig in areas with buried gas or electrical lines; call your local utility company.
9. Falling hazard; crushing hazard of hands—do not lift or carry a person with the attachments; keep bystanders away.
10. Tipping hazard—always move up or down slopes with the attachment lowered; never drive on a slope with the attachment raised; always operate with the heavy end uphill; do not drive the machine with the load raised.
11. Tipping hazard—do not make fast turns; look behind and down when moving in reverse.

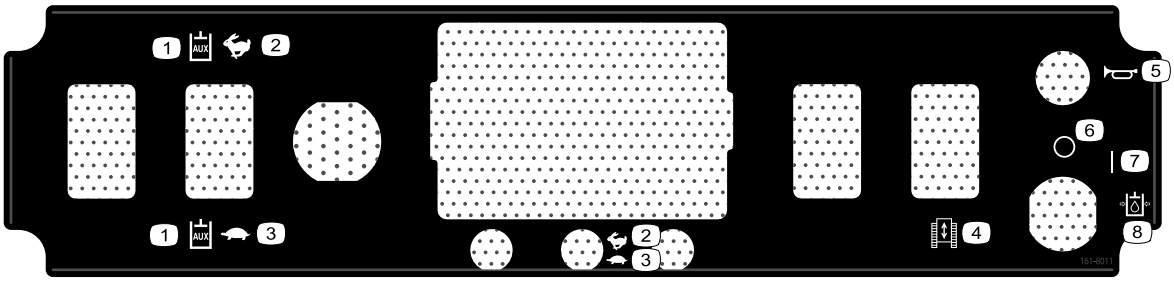

decal161-8011

161-8011

1. Auxiliary hydraulics
2. Fast
3. Slow
4. Traction control
5. Horn
6. Off
7. On
8. Auxiliary hydraulic relief position

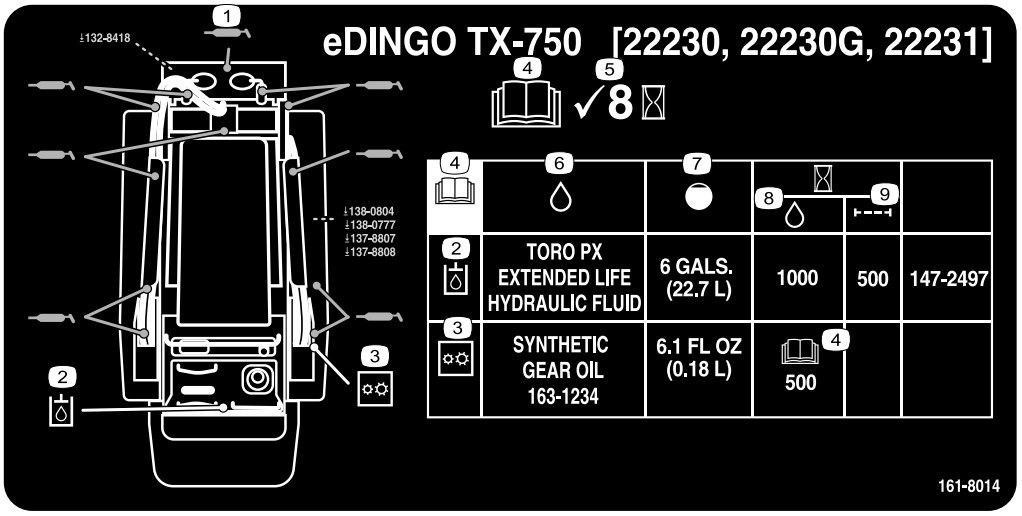

decal161-8014

161-8014

1. Grease points
2. Hydraulic fluid
3. Gearbox
4. Read the *Operator's Manual*
5. Check every 8 hours
6. Fluid
7. Capacity
8. Fluid change interval
9. Filter change interval

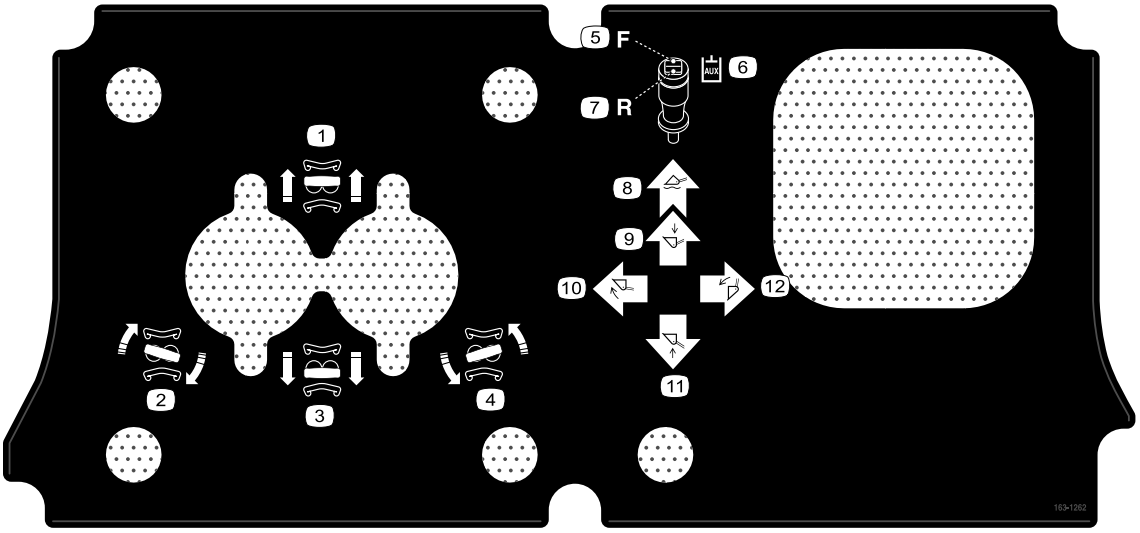

decal163-1262

163-1262

1. Move forward
2. Turn right
3. Move rearward
4. Turn left
5. Reverse
6. Auxiliary hydraulics
7. Forward
8. Float the attachment
9. Lower the attachment
10. Tilt the attachment forward
11. Raise the attachment
12. Tilt the attachment rearward

Product Overview

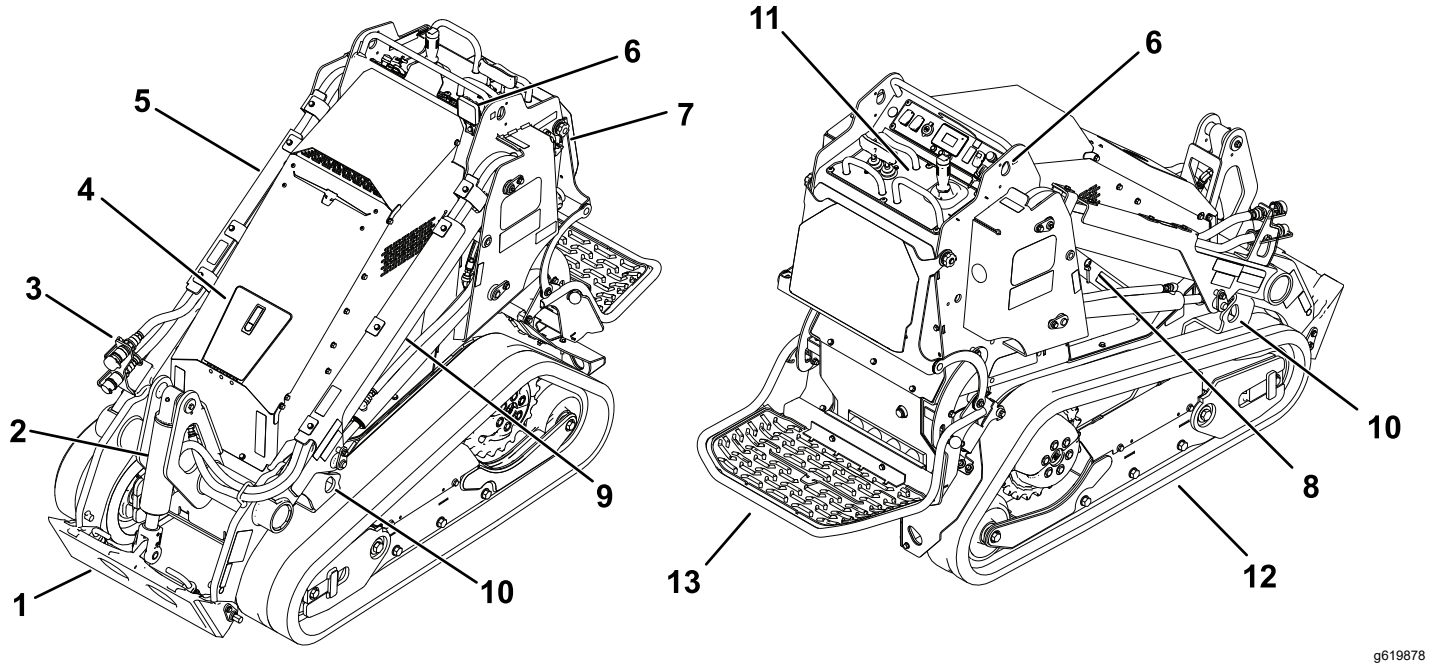

Figure 4

1. Attachment mount plate
2. Tilt cylinder
3. Auxiliary hydraulic couplers
4. Front access door
5. Loader arm
6. Work light
7. Battery-disconnect switch
8. Cylinder lock
9. Lift cylinder
10. Tie-down/lift point
11. Control panel
12. Track
13. Operator platform

Controls

Control Panel

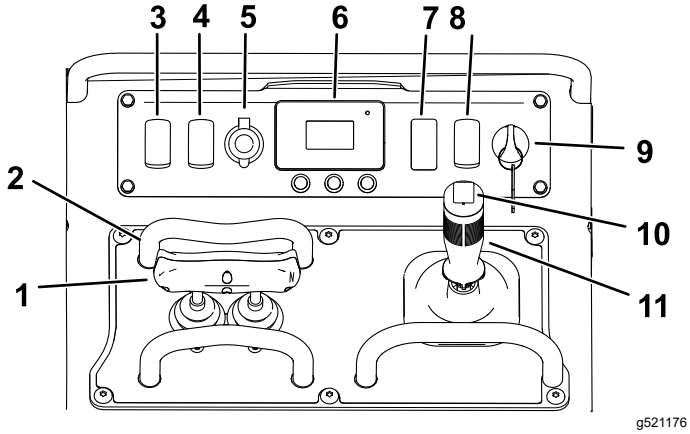

Figure 5

1. Traction control
2. Reference bar
3. Light switch
4. Auxiliary-hydraulics flow speed switch
5. Power socket
6. InfoCenter
7. Plug
8. Traction-enable switch
9. Key switch
10. Auxiliary-hydraulics control
11. Loader-arm/attachment tilt lever

Key Switch

The key switch has 3 positions: ON, OFF, and AUXILIARY HYDRAULIC RELIEF.

Use the key switch to start, shut off, and relieve auxiliary hydraulic pressure on the machine.

Parking Brake

The parking brake engages automatically when you stop the machine and release the traction control to neutral. An icon appears on the InfoCenter display when the parking brake is engaged.

The parking brake disengages when you move the traction control.

Reference Bar

When driving the traction unit, use the reference bar as a handle and a leverage point for controlling the traction control and the auxiliary-hydraulics lever. To ensure smooth, controlled operation, do not take your hands off the reference bars while operating the machine.

Traction Control

Use the traction control to move the machine. The farther you move the traction control in any direction, the faster the machine moves in that direction. Release the traction control to stop the machine.

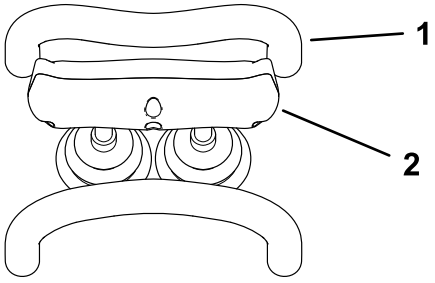

Figure 6

1. Reference bar
2. Traction control

- To move forward, move the traction control forward.

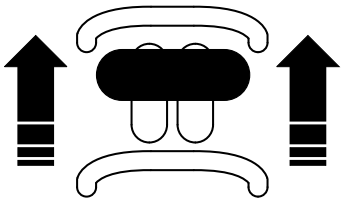

Figure 7

- To move rearward, move the traction control rearward.

  Important: **When reversing, look behind you for obstructions and keep your hands on the reference bar.**

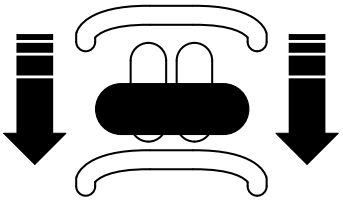

Figure 8

- To turn right, rotate the traction control clockwise.

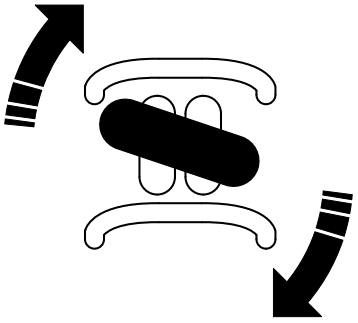

g264833

Figure 9

- To turn left, rotate the traction control counterclockwise.

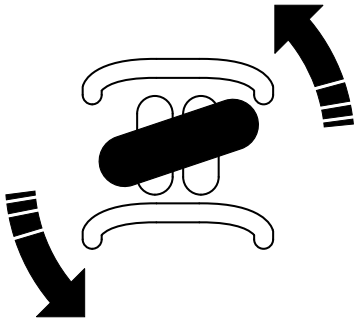

g264832

Figure 10

- To stop the machine, release the traction control.

Loader Arm/Attachment-Tilt Lever

Slowly move the lever to operate the loader arms and tilt the attachment.

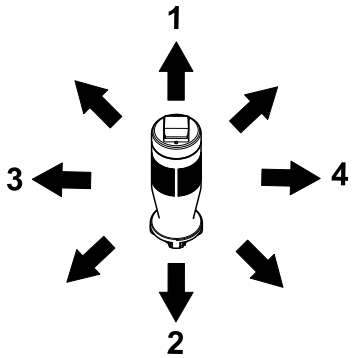

g549237

Figure 11

1. Lower the loader arms.
2. Raise the loader arms.
3. Tilt the attachment rearward.
4. Tilt the attachment forward.

By moving the lever to an intermediate position (e.g., forward and left), you can move the loader arms and tilt the attachment at the same time.

Loader-Control-Reference Bar

The loader-control-reference bar helps stabilize your hand while operating the loader arm/attachment-tilt lever.

Auxiliary-Hydraulics Controls

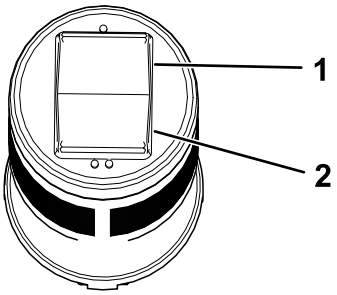

g530559

Figure 12

1. Operate auxiliary hydraulics in the forward direction.
2. Operate auxiliary hydraulics in the reverse direction.

Auxiliary-Hydraulics Flow Speed Switch

Use the auxiliary-hydraulics flow speed switch to select a fast or slow speed for hydraulic attachments.

Traction-Enable Switch

The traction control is automatically disabled when starting the machine. Toggle the traction-enable switch after starting the machine to use the traction control or to operate the machine after it enters sleep mode.

InfoCenter Display

The InfoCenter LCD display shows information about your machine, such as the operating status and various diagnostics. There is a splash screen and main information screen of the InfoCenter. To switch between the splash screen and main information screen at any time, press any InfoCenter button and then press the right button.

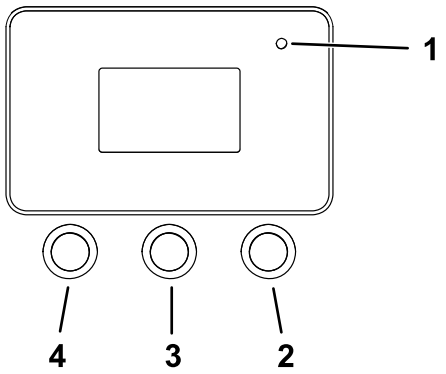

g264015

Figure 13

1. Indicator light
2. Right button—open a menu where a right arrow indicates additional content
3. Middle button—scroll down menus
4. Left button—access menus and exit any menu

Note: The purpose of each button may change depending on what is required at the time. Each button is labeled with an icon displaying its current function.

The splash screen displays for a few seconds after you turn the key to the ON position and then the run screen displays.

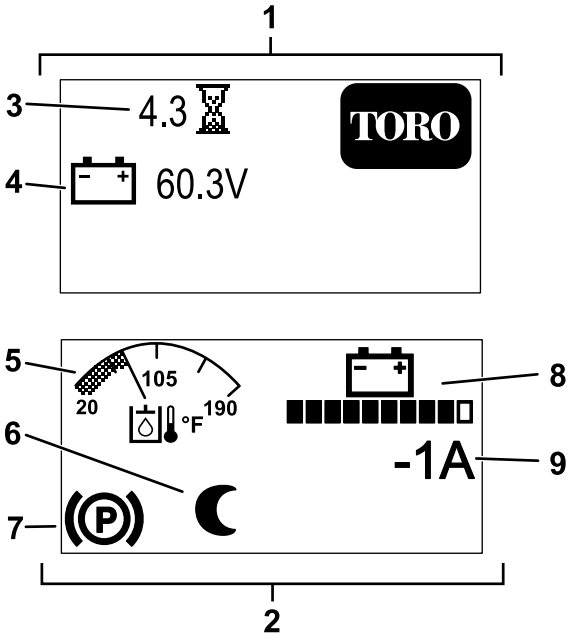

g538528

Figure 14

1. Splash screen
2. Run screen
3. Hours operated
4. Battery voltage
5. Hydraulic fluid temperature
6. Sleep mode is active.
7. Parking brake is engaged.
8. Battery charge
9. Instantaneous machine amperage

InfoCenter Icon Descriptions

	Menu access
	Next
	Previous
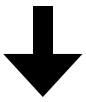	Scroll down
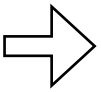	Enter
	Increase
	Decrease
	Exit menu
	Accept
	Parking brake is engaged.
	Hour meter
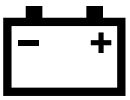	Battery voltage
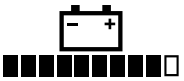	Battery charge—each solid bar represents the charge in 10% increments.
	Sleep Mode is active.
	Hydraulic fluid temperature
	Maximum traction speed control
	Fast

InfoCenter Menus

To access the InfoCenter menu system, press the menu access button  while at the main screen. This will bring you to the main menu. Refer to the following tables for a synopsis of the options available from the menus:

Main Menu

Menu Item	Description
FAULTS	A list of the recent machine faults. Refer to the *Service Manual* or your Authorized Service Dealer for more information on the FAULTS menu.
SERVICE	Machine information such as hours of use and other similar numbers.
DIAGNOSTICS	Displays the state of each machine switch, sensor, and control output. This tells you which machine controls are on and off, which assists in troubleshooting.
SETTINGS	Customize and modify configuration variables on the InfoCenter display.
ABOUT	Lists the model number, serial number, and software version.

Faults

Menu Item	Description
CURRENT	Lists the total number of key-on hours (i.e., hours that the key has been in the ON position).
LAST	Indicates the last key-on hour that the fault occurred on.
FIRST	Indicates the first key-on hour that the fault occurred on.
OCCURRENCES	Indicates the number of fault occurrences.

Service

Menu Item	Description
HOURS	Lists the total number of hours that the key, motors, full power, and limp mode have been on and the hours that the traction controls and hydraulics have been engaged.
COUNTS	Lists the number of hydraulic motor starts, charge cycles, and low battery alerts.
TRACTION CALIBRATION	Calibrates the traction control.

Diagnostics

Menu Item	Description
BATTERY	Indicates the inputs and outputs for the batteries. Inputs include the current battery voltage and temperature; outputs include the battery current and percentage state of charge.
BATTERY PACKS	Indicates the status of individual batteries.
CAN	Indicates the status, health, and utilization of the CAN bus.
DISPLAY	Displays the inputs and outputs of the machine.
LEFT MOTOR	Indicates the status of the left traction motor.
RIGHT MOTOR	Indicates the status of the right traction motor.
HYDRAULIC MOTOR	Indicates the status of the hydraulic motor.

Settings

Menu Item	Description
UNITS	Controls the units used on the display (Imperial or Metric).
LANGUAGE	Controls the language used on the InfoCenter.
BACKLIGHT	Controls the brightness of the LCD display.
CONTRAST	Controls the contrast of the LCD display.
PROTECTED MENUS	Allows you to access protected menus by inputting a passcode.
PROTECT SETTINGS	Allows you to change the settings in the protected settings.
MAX SPEED	Allows you to adjust the maximum traction speed.

About

Menu Item	Description
MODEL	Lists the model number of the machine.
SN	Lists the serial number of the machine.
S/W REV	Lists the software revision of the main controller.
LEFT MOTOR SW	Lists the software revision of the left traction motor.
RIGHT MOTOR SW	Lists the software revision of the right traction motor.
HYDRAULIC SW	Lists the software revision of the hydraulic motor.
BATTERY SW	Lists the software revision of the battery.

Specifications

Note: Specifications and design are subject to change without notice.

Narrow-Track Machines

Width (platform up)	80 cm (31.5 inches)
Length	
Platform down (with standard bucket)	255.5 cm (100.6 inches)
Platform up (without bucket)	167.6 cm (66 inches)
Height	138.4 cm (54.5 inches)
Weight (without attachment)	1,162 kg (2,561 lb)
Rated operating capacity	
Platform down (with 74.8 kg (165 lb) operator and standard bucket)	340 kg (750 lb)
Platform up (with standard bucket)	290 kg (640 lb)
Tipping capacity	
Platform down (with 74.8 kg (165 lb) operator and standard bucket)	972 kg (2,142 lb)
Platform up (with standard bucket)	842 kg (1,857 lb)
Wheelbase	113.8 cm (44.8 inches)
Dump height (with standard bucket)	155.0 cm (61.0 inches)
Reach—fully raised (with standard bucket)	53.8 cm (21.2 inches)
Height to hinge pin (narrow bucket in standard position)	206.0 cm (81.1 inches)
Average floor pressure (at rated operating capacity with standard bucket)	8.7 kPa (1.3 psi)

Wide-Track Machines

Width (platform up)	94.5 cm (37.2 inches)
Length	
Platform down (with standard bucket)	255.5 cm (100.6 inches)
Platform up (without bucket)	167.6 cm (66 inches)
Height	138.4 cm (54.5 inches)
Weight (without attachment)	1,209 kg (2,665 lb)
Rated operating capacity	
Platform down (with 74.8 kg (165 lb) operator and standard bucket)	340 kg (750 lb)
Platform up (with standard bucket)	290 kg (640 lb)
Tipping capacity	
Platform down (with 74.8 kg (165 lb) operator and standard bucket)	972 kg (2,142 lb)
Platform up (with standard bucket)	842 kg (1,857 lb)
Wheelbase	113.8 cm (44.8 inches)
Dump height (with standard bucket)	155.0 cm (61.0 inches)
Reach—fully raised (with standard bucket)	53.8 cm (21.2 inches)
Height to hinge pin (narrow bucket in standard position)	206.0 cm (81.1 inches)
Average floor pressure (at rated operating capacity with standard bucket)	7.6 kPa (1.1 psi)

Attachments/Accessories

A selection of Toro approved attachments and accessories is available for use with the machine to enhance and expand its capabilities. Contact your Authorized Service Dealer or authorized Toro distributor or go to www.Toro.com for a list of all approved attachments and accessories.

To ensure optimum performance and continued safety certification of the machine, use only genuine Toro replacement parts and accessories. Replacement parts and accessories made by other manufacturers could be dangerous.

Operation

Before Operation

Before Operation Safety

General Safety

- Never allow children or untrained people to operate or service the machine. Local regulations may restrict the age or require certified training of the operator. The owner is responsible for training all operators and mechanics.
- Become familiar with the safe operation of the equipment, operator controls, and safety decals.
- Always engage the parking brake, shut off the machine, remove the key, wait for all moving parts to stop, and allow the machine to cool before adjusting, servicing, cleaning, or storing the machine.
- Know how to stop the machine and shut off the machine quickly.
- Check that the safety switches and shields are attached and functioning properly. Do not operate the machine unless they are functioning properly.
- Locate the pinch-point areas marked on the machine and attachments; keep your hands and feet away from these areas.
- Before operating the machine with an attachment, ensure that the attachment is properly installed and that it is a genuine Toro attachment. Read all the attachment manuals.
- Evaluate the terrain to determine what accessories and attachments you need to properly and safely perform the job.
- Have the property or work area marked for buried lines and other objects, and do not dig in marked areas; note the location of unmarked objects and structures, such as underground storage tanks, wells, and septic systems.
- Inspect the area where you will use the equipment for uneven surfaces or hidden hazards.
- Ensure that the area is clear of bystanders before operating the machine. Stop the machine if a bystander enters the area.

Performing Daily Maintenance

Before starting the machine each day, perform the Each Use/Daily procedures listed in Maintenance and Storage (page 24)

During Operation

During Operation Safety

General Safety

- Do not exceed the rated operating capacity, as the machine may become unstable, which may result in loss of control.
- Do not carry a load with the arms raised. Always carry loads close to the ground.
- Use only Toro-approved attachments and accessories. Attachments can change the stability and the operating characteristics of the machine.
- For machines with a platform:
  - Lower the loader arms before stepping off the platform.
  - Do not try to stabilize the machine by putting your foot on the ground. If you lose control of the machine, step off the platform and away from the machine.
  - Do not place your feet under the platform.
  - Do not move the machine unless you are standing with both feet on the platform and your hands are holding onto the reference bars.
- Use your full attention while operating the machine. Do not engage in any activity that causes distractions; otherwise, injury or property damage may occur.
- Look behind and down before backing up to ensure that the path is clear.
- Never jerk the controls; use a steady motion.
- The owner/user can prevent and is responsible for accidents that may cause personal injury or property damage.
- Wear appropriate clothing including gloves, eye protection, long pants, substantial slip-resistant footwear, and hearing protection. Tie back long hair and do not wear loose clothing or loose jewelry.
- Do not operate the machine when you are tired, ill, or under the influence of alcohol or drugs.
- Never carry passengers and keep pets and bystanders away from the machine.
- Operate the machine only in good light, keeping away from holes and hidden hazards.
- Ensure that all the drives are in neutral before starting the machine. Start the machine only from the operator's position.
- Use care when approaching blind corners, shrubs, trees, or other objects that may obscure vision.

- Slow down and use caution when making turns and crossing roads and sidewalks. Watch for traffic.
- Stop the attachment when you are not working.
- Stop the machine, shut off the machine, remove the key, and inspect the machine if you strike an object. Make any necessary repairs before resuming operation.
- Never leave a machine on when unattended.
- Before leaving the operating position, do the following:
  - Park the machine on a level surface.
  - Lower the loader arms and disengage the auxiliary hydraulics.
  - Shut off the machine and remove the key.
- Do not operate the machine when there is the risk of lightning.
- Operate the machine only in areas where there is sufficient clearance for you to safely maneuver. Be aware of obstacles in close proximity to you. Failure to maintain adequate distance from trees, walls, and other barriers may result in injury as the machine backs up during operation if you are not attentive to the surroundings.
- Check for overhead clearance (i.e., electrical wires, branches, ceilings, and doorways) before driving under any objects and do not contact them.
- Do not overfill the attachment and always keep the load level when raising the loader arms. Items in the attachment could fall and cause injury.

Slope Safety

- **Operate the machine up and down slopes with the heavy end of the machine uphill.** Weight distribution changes with attachments. An empty bucket makes the rear of the machine the heavy end, and a full bucket makes the front of the machine the heavy end. Most other attachments make the front of machine the heavy end.
- Raising the loader arms on a slope affects the stability of the machine. Keep the loader arms in the lowered position when on slopes.
- Slopes are a major factor related to loss of control and tip-over accidents, which can result in severe injury or death. Operating the machine on any slope or uneven terrain requires extra caution.
- Establish your own procedures and rules for operating on slopes. These procedures must include surveying the site to determine which slopes are safe for machine operation. Always use common sense and good judgment when performing this survey.
- Slow down and use extra care on hillsides. Ground conditions can affect the stability of the machine.
- Avoid starting or stopping on a slope. If the machine loses traction, proceed slowly, straight down the slope.
- Avoid turning on slopes. If you must turn, turn slowly and keep the heavy end of the machine uphill.
- Keep all movements on slopes slow and gradual. Do not make sudden changes in speed or direction.
- If you feel uneasy operating the machine on a slope, do not do it.
- Watch for holes, ruts, or bumps, as uneven terrain could overturn the machine. Tall grass can hide obstacles.
- Use caution when operating on wet surfaces. Reduced traction could cause sliding.
- Evaluate the area to ensure that the ground is stable enough to support the machine.
- Use caution when operating the machine near the following:
  - Drop-offs
  - Ditches
  - Embankments
  - Bodies of water

  The machine could suddenly roll over if a track goes over the edge or the edge caves in. Maintain a safe distance between the machine and any hazard.
- Do not remove or add attachments on a slope.
- Do not park the machine on a hillside or slope.

Utility Line Safety

- If you strike a utility line, do the following:
  - Shut off the machine and remove the key.
  - Remove all individuals from the work area.
  - Immediately contact the proper emergency and utility authorities to secure the area.
  - If you damage a fiber-optic cable, do not look into the exposed light.
- Do not leave the operator's platform if the machine is charged with electricity. You will be safe as long as you do not leave the platform.
  - Touching any part of the machine may ground you.
  - Do not allow another individual to touch or approach the machine when charged.
  - Always assume the machine is charged if you strike an electrical or communication line. Do not attempt to leave the machine.
- Leaking gas is both flammable and explosive and may cause serious injury or death. Do not smoke while operating the machine.

Starting the Machine

1. Ensure that the battery-disconnect switch is in the ON position.
2. Stand on the platform.
3. Ensure that the loader-arm/attachment-tilt lever and traction control are in the NEUTRAL position.
4. Insert the key into the key switch and turn it to the ON position.

Note: The machine may have difficulty starting under severe cold conditions. When starting a cold machine, keep the machine above -18°C (0°F).

Note: When the machine temperature is below -1°C (30°F), the hydraulic fluid temperature symbol will appear on the InfoCenter while the hydraulic fluid warms. Hydraulic function may be reduced during this time. The symbol disappears when the fluid is warm.



g442369

Figure 15

Note: Do not drive through standing water. Refer to the water level decal on your machine.

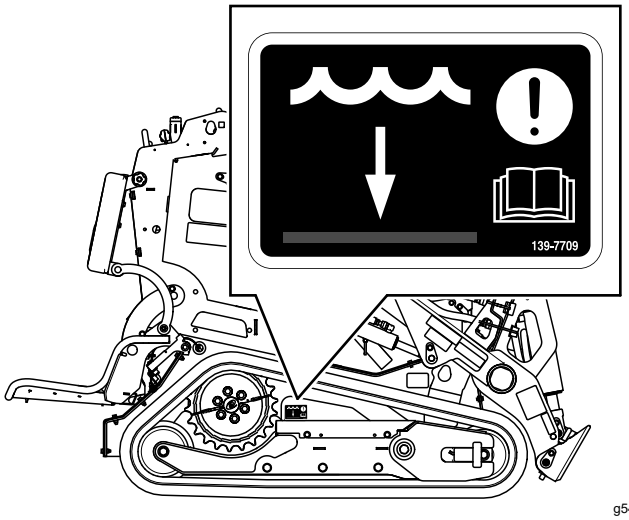

g546110

Figure 16

Shutting Off the Machine

1. Park the machine on a level surface and lower the loader arms.
2. Disengage the auxiliary hydraulics.
3. Ensure that the loader-arm/attachment-tilt lever and traction control are in the NEUTRAL position.
4. Turn the key switch to the OFF position and remove the key.

Note: The parking brake engages automatically when you stop the machine and release the traction control to the NEUTRAL position.

⚠ CAUTION

Children or bystanders may be injured if they move or attempt to operate the machine while it is unattended.

Always remove the key when leaving the machine unattended.

Sleep Mode

After 30 seconds of inactivity, the machine goes into sleep mode and displays the sleep mode icon on the InfoCenter. Hydraulics and traction controls are disabled during sleep mode.

To resume normal operation, toggle the traction-enable switch.

After 5 minutes, the machine shuts off; cycle the key to start the machine again.

Using Attachments

Installing an Attachment

Important: **To ensure optimum performance, use only Toro-approved attachments. The stability and operating characteristics of the machine may change if you use the machine with unapproved attachments.**

Important: **Before installing the attachment, ensure that the mount plates are free of any dirt or debris and that the pins move freely. If the pins do not move freely, grease them.**

1. Position the attachment on a level surface with enough space behind it to accommodate the machine.
2. Start the machine.
3. Tilt the attachment mount plate forward.
4. Position the mount plate into the upper lip of the attachment receiver plate.

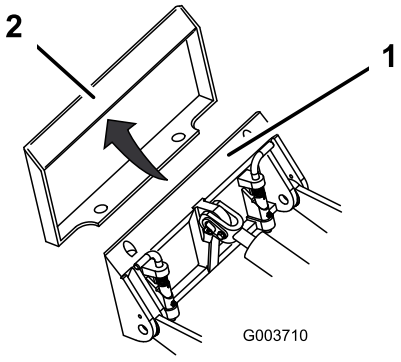

g003710

Figure 17

1. Mount plate
2. Receiver plate

5. Raise the loader arms while tilting back the mount plate at the same time.

   Important: **Raise the attachment enough to clear the ground and tilt the mount plate all the way back.**

6. Shut off the machine and remove the key.
7. Engage the quick-attach pins, ensuring that they are fully seated in the mount plate.

   Important: **If the pins do not rotate to the engaged position, the mount plate is not fully aligned with the holes in the attachment receiver plate. Check the receiver plate and clean it if necessary.**

⚠ WARNING

If you do not fully seat the quick-attach pins through the attachment mount plate, the attachment could fall off the machine, crushing you or bystanders.

Ensure that the quick-attach pins are fully seated in the attachment mount plate.

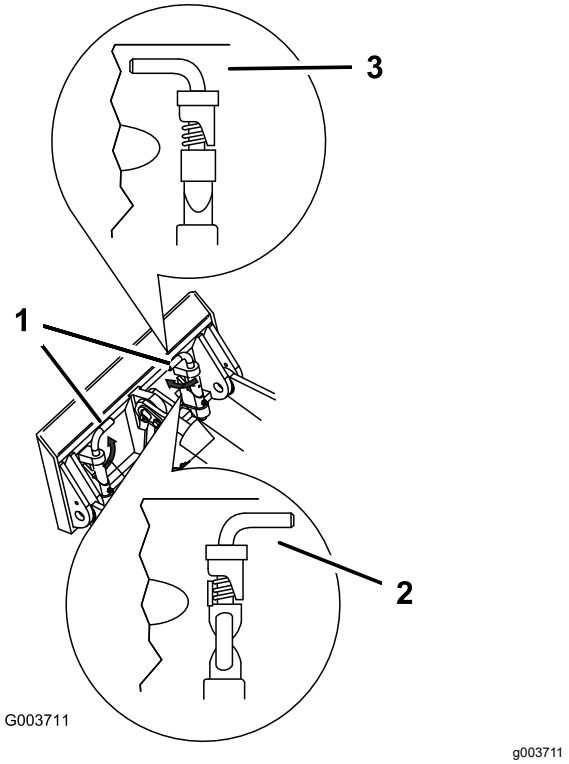

g003711

Figure 18

1. Quick-attach pins (engaged position)
2. Disengaged position
3. Engaged position

Connecting the Hydraulic Hoses

⚠ WARNING

Hydraulic fluid escaping under pressure can penetrate skin and cause injury. Fluid injected into the skin must be surgically removed within a few hours by a doctor familiar with this form of injury; otherwise, gangrene may result.

- **Ensure that all hydraulic-fluid hoses and lines are in good condition and all hydraulic connections and fittings are tight before applying pressure to the hydraulic system.**
- **Keep your body and hands away from pinhole leaks or nozzles that eject high-pressure hydraulic fluid.**
- **Use cardboard or paper to find hydraulic leaks; never use your hands.**

⚠ CAUTION

Hydraulic couplers, hydraulic lines/valves, and hydraulic fluid may be hot. If you contact hot components, you may be burned.

- **Wear gloves when operating the hydraulic couplers.**
- **Allow the machine to cool before touching hydraulic components.**
- **Do not touch hydraulic fluid spills.**

If the attachment requires hydraulics for operation, connect the hydraulic hoses as follows:

1. Relieve pressure at the hydraulic couplers; refer to Relieving Hydraulic Pressure (page 45).
2. Turn the key to the OFF position and remove the key.
3. Remove the protective covers from the hydraulic connectors on the machine.
4. Ensure that all foreign matter is cleaned from the hydraulic connectors.
5. Push the attachment male connector into the female connector on the machine.

   Note: When you connect the attachment male connector first, you relieve any pressure built up in the attachment.
6. Push the attachment female connector onto the male connector on the machine.
7. Confirm that the connection is secure by pulling on the hoses.

Removing an Attachment

1. Park the machine on a level surface.
2. Lower the attachment to the ground.
3. If the attachment uses hydraulics, relieve pressure at the hydraulic couplers; refer to Relieving Hydraulic Pressure (page 45).
4. Shut off the machine and remove the key.
5. Disengage the quick-attach pins by turning them to the outside.
6. If the attachment uses hydraulics, slide the collars back on the hydraulic couplers and disconnect them.

   Important: **Connect the attachment hoses together to prevent hydraulic system contamination during storage.**
7. Install the protective covers onto the hydraulic couplers on the machine.
8. Start the machine, tilt the mount plate forward, and back the machine away from the attachment.

Using the Operator Platform

⚠ WARNING

The operator platform is heavy and may cause injury when you raise or lower it. Carefully lower or raise the operator platform, as suddenly dropping it could injure you.

- **Do not put your hands or fingers in the platform-pivot area when lowering or raising the operator platform.**
- **Make sure that the platform is supported when you pull the latch pin out.**
- **Make sure that the latch secures the platform when folding it up. Push it tight against the cushion for the latch pin to lock into place.**
- **Keep bystanders away from the machine when raising or lowering the platform.**

⚠ WARNING

The machine has a lower rated operating capacity while the platform is raised; exceeding this capacity may cause the machine to lose stability and result in death or serious injury.

- **When possible, operate the machine with the platform down while carrying loads.**
- **Do not exceed the rated operating capacity indicated in Product Overview (page 12).**

Operate the machine with the platform up for the following conditions:

- Using the machine near drop-offs
- Using the machine in small areas where the machine is too large
- Areas with low-hanging branches or obstacles
- When loading or unloading the machine from a trailer for transport

Operate the machine with the platform down for the following conditions:

- Using the machine in most areas
- Driving on slopes
- Carrying loads

Lowering the Platform

1. Push the platform against the cushion to release pressure on the right latch pin.
2. Pull the knob out and lower the platform.

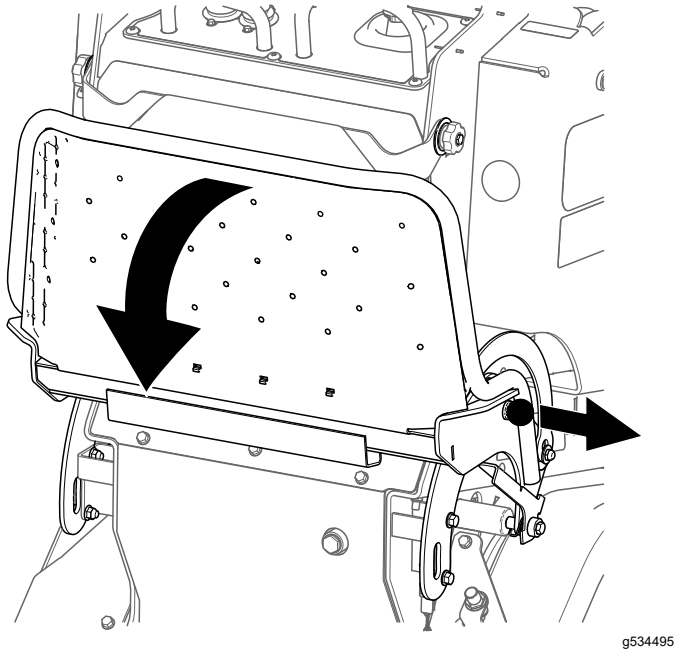

g534495

Figure 19

Raising the Platform

Pull both knobs out and lift the platform up until it locks into place.

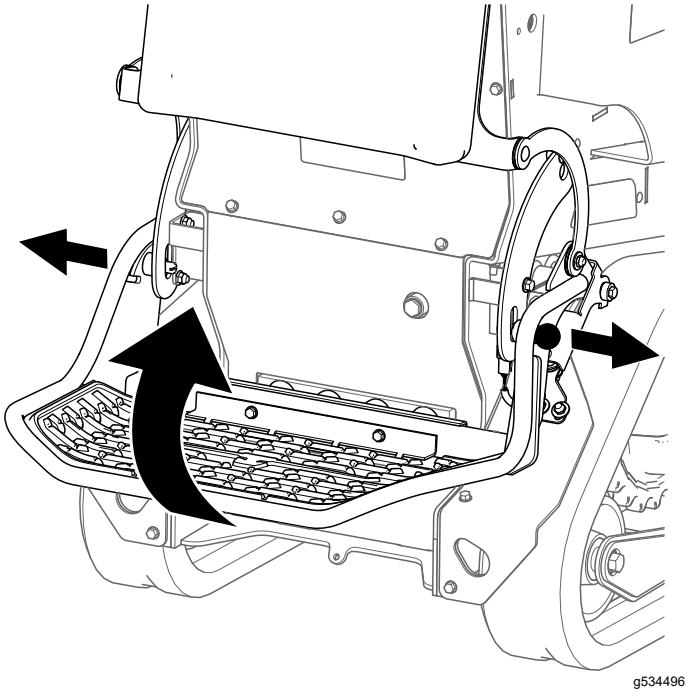

g534496

Figure 20

After Operation

After Operation Safety

General Safety

- Engage the parking brake (if equipped), lower the loader arms, shut off the machine, remove the key, wait for all movement to stop, and allow the machine to cool before adjusting, cleaning, storing, or servicing it.
- Clean debris from the attachments and drives to help prevent fires.
- Keep all parts in good working condition and all hardware tightened.
- Do not touch parts that may be hot from operation. Allow them to cool before attempting to maintain, adjust, or service the machine.
- Use care when loading or unloading the machine into a trailer or truck.

Battery and Charger Safety

General

WARNING: Risk of fire and electric shock—The batteries have no user-serviceable parts.

- Confirm the voltage that is available in your country before using the charger.
- Do not charge the machine in a wet environment; keep it protected from rain and snow.
- A risk of fire, electric shock, or injury may result from using an accessory not recommended or sold by Toro.
- To reduce risk of a battery explosion, follow these instructions and the instructions for any equipment that you intend to use near the charger.
- Batteries could emit explosive gasses if they are significantly overcharged.
- Refer to an Authorized Service Dealer to service or replace a battery.

Training

- Never allow children or untrained people to operate or service the charger. Local regulations may restrict the age of the operator. The owner is responsible for training all operators and mechanics.
- Read, understand, and follow all instructions on the charger and in the manual before operating the charger. Be familiar with the proper use of the charger.

Preparation

- Keep bystanders and children away while charging.
- Shut off the machine and wait until the machine has completely powered down before charging. Failure to do this may cause arcing.
- Ensure that the area is well ventilated while charging.
- Use the charger only within the voltage range specified in this *Operator's Manual*, and use only a power cord approved by Toro.
- Contact your Authorized Service Dealer for the proper charger and power cord.

Operation

- Do not charge a frozen battery.
- Do not abuse the cord. Do not pull on the power supply cord to disconnect the charger from the receptacle. Store the cord away from heat, oil, and sharp edges.
- Connect the charger directly to a grounding receptacle. Do not use the charger on an ungrounded outlet, even with a grounding adapter.
- Do not alter the provided power cord or plug.
- Remove metal items such as rings, bracelets, necklaces, and watches when working with a lithium-ion battery. A lithium-ion battery can produce enough current to cause a severe burn.
- Use an extension cord that can handle the charging amperage specified in this *Operator's Manual*. If you are charging outdoors, use an extension cord rated for outdoor use.
- If the power supply cord is damaged while it is plugged in, disconnect the cord from the wall receptacle and contact an Authorized Service Dealer for a replacement.
- Unplug the charger from the electrical outlet when not in use, before moving it to another location, or prior to servicing it.

Maintenance and Storage

- Do not disassemble the charger.
- Take the charger to an Authorized Service Dealer when service or repair is required.
- Unplug the power cord from the outlet before starting any maintenance or cleaning to reduce risk of electric shock.
- Maintain or replace safety and instruction labels as needed.
- Do not operate the charger with a damaged cord or plug. Contact an Authorized Service Dealer to obtain a replacement cord.
- If the charger is damaged, do not use it; take it to an Authorized Service Dealer.

Lifting the Machine

Remove any attachments and lift the machine using the 2 lift points.

Do not exceed a 30-degree angle when lifting the machine; use the minimum chain lengths provided below.

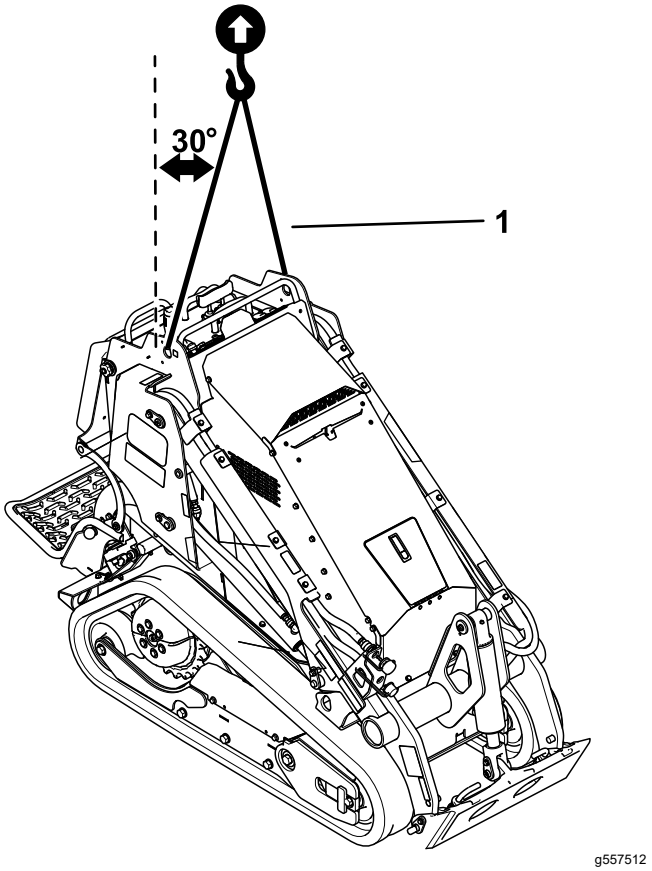

Figure 21

1. Chain length for lift point (2)—50.8 cm (20 inches)

Retrieving a Stuck Machine

If the machine becomes stuck (e.g., in muddy conditions), pull the machine back into a stable position using either both front tie-down points or both rear tie-down points simultaneously.

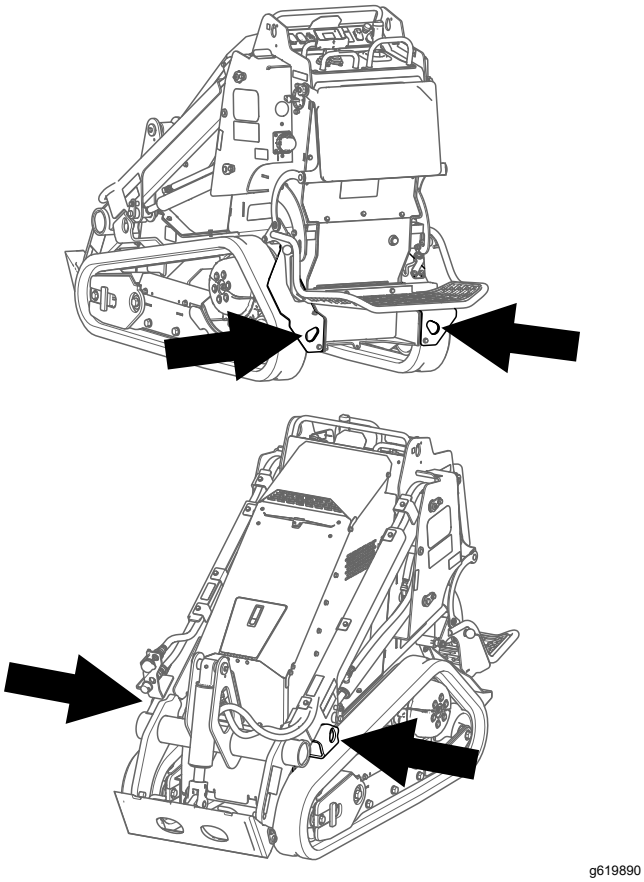

g619890

Figure 22

Moving a Non-Functioning Machine

If you need to move a machine that does not drive, lift it using the 2 lift points; refer to Lifting the Machine (page 24).

Important: **Do not tow the machine; otherwise you could damage the drive motors.**

Hauling the Machine

Use a heavy-duty trailer or truck to haul the machine. Use a full-width ramp. Ensure that the trailer or truck has all the necessary brakes, lighting, and marking as required by law. Please carefully read all the safety instructions. Knowing this information could help you or bystanders avoid injury. Refer to your local ordinances for trailer and tie-down requirements.

Selecting a Trailer

⚠ WARNING

Loading or unloading a machine onto a trailer or truck increases the possibility of tip-over and could cause serious injury or death (Figure 23).

- **Use only full-width ramps.**
- **Ensure that the length of ramp is at least 4 times as long as the height of the trailer or truck bed to the ground. This ensures that ramp angle does not exceed 15 degrees on flat ground.**

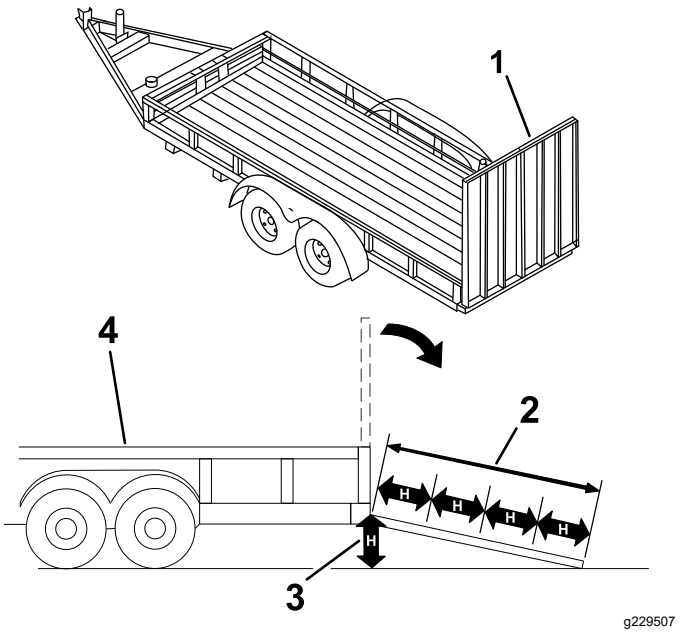

g229507

Figure 23

1. Full-width ramp(s) in stowed position
2. Ramp is at least 4 times as long as the height of the trailer or truck bed to the ground
3. H=height of the trailer or truck bed to the ground
4. Trailer

Loading the Machine

⚠ WARNING

Loading or unloading a machine onto a trailer or truck increases the possibility of tip-over and could cause serious injury or death.

- **Use extreme caution when operating a machine on a ramp.**
- **Load and unload the machine with the heavy end up the ramp.**
- **Avoid sudden acceleration or deceleration while driving the machine on a ramp as this could cause a loss of control or a tip-over situation.**

1. If using a trailer, connect it to the towing vehicle and connect the safety chains.
2. If applicable, connect the trailer brakes.
3. Lower the ramp(s).
4. Lower the loader arms.
5. Load the machine onto the trailer with the heavy end up the ramp, carrying loads low, as shown.
   - If the machine has a **full** load-bearing attachment (e.g., bucket) or a non-load-bearing attachment (e.g., trencher), drive the machine forward up the ramp.
   - If the machine has an **empty** load-bearing attachment or no attachment, back the machine up the ramp.

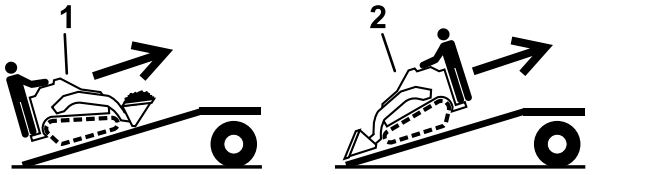

g204457

Figure 24

1. Machine with full attachment or non-load-bearing attachment—drive the machine forward up the ramp(s).
2. Machine with empty or no attachment—back the machine up the ramp(s).

6. Lower the loader arms all the way down.
7. Engage the parking brake (if equipped), shut off the machine, and remove the key.
8. Use the metal tie-down loops on the machine to securely fasten the machine to the trailer or truck with straps, chains, cable, or ropes. Refer to local regulations for tie-down requirements.

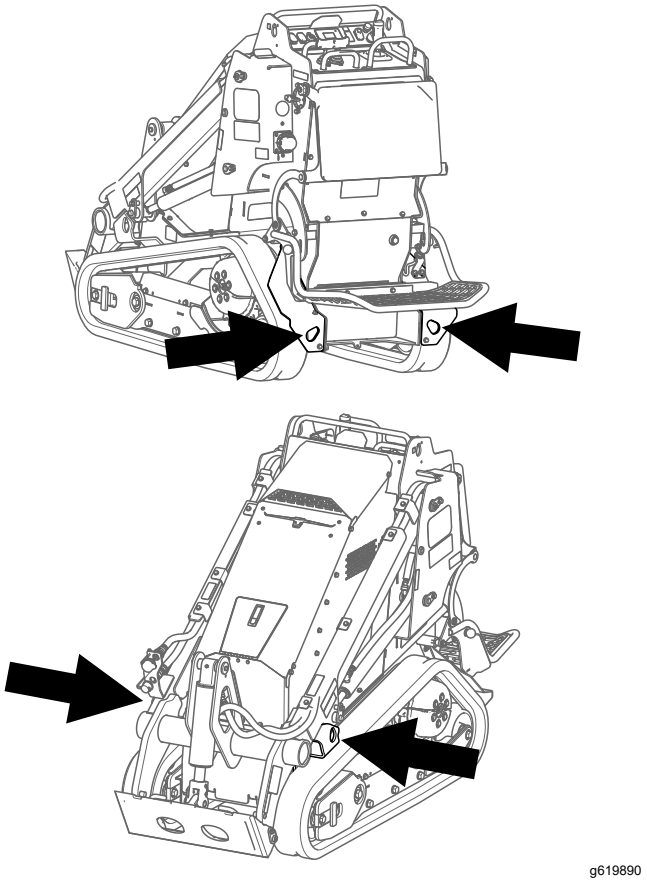

g619890

Figure 25

Unloading the Machine

1. Lower the ramp(s).
2. Unload the machine from the trailer with the heavy end up the ramp, carrying loads low.
   - If the machine has a **full** load-bearing attachment (e.g., bucket) or a non-load-bearing attachment (e.g., trencher), back it down the ramp.
   - If the machine has an **empty** load-bearing attachment or no attachment, drive it forward down the ramp.

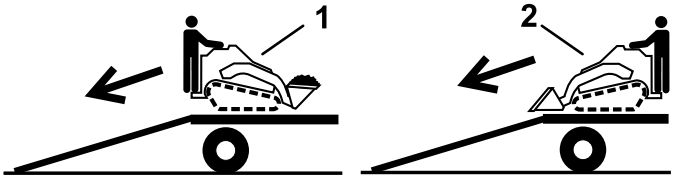

g204458

Figure 26

1. Machine with full attachment or non-load-bearing attachment—back the machine down the ramp(s).
2. Machine with empty or no attachment—drive the machine forward down the ramp(s).

Transporting the Lithium-Ion Batteries

The US Department of Transportation and international transportation authorities require that lithium-ion batteries be transported using special packaging and only be transported by carriers certified to haul them. In the US, you are allowed to transport a battery when it is installed on the machine as battery powered equipment, with some regulatory requirements. Contact the US Department of Transportation or the appropriate government body in your country for detailed regulations on transportation of your batteries or the machine with the batteries equipped.

For detailed information on shipping a battery, contact your Authorized Service Dealer.

Using the Battery Charger

⚠ DANGER

Contact with water while charging the machine could cause electric shock, causing injury or death.

- **Do not handle the plug or the charger with wet hands or while standing in water.**
- **Do not charge the batteries in the rain or in wet conditions.**

Power-Source Requirements

A 20 A circuit with 230V to 250V is required for full charger-output power. The charger is capable of charging between 100VAC to 240VAC, but using a power source below 230VAC results in reduced charger-output power.

Use the appropriate power-supply cord (for use in your geographic region) to charge the machine. Refer to your Authorized Service Dealer for the appropriate cord.

If you need to use an extension cord with your power-supply cord, ensure that the extension cord has 12 AWG wires and is rated for 250 V.

Important: **Check the power-supply cord periodically for holes or cracks in the insulation. Do not use a damaged cord. Do not run the cord through standing water or wet grass. Do not change the charger or the power-supply-cord plug in any way.**

⚠ WARNING

A damaged power-supply cord can cause an electrical shock or a fire.

Thoroughly inspect the power-supply cord before using the charger. If the cord is damaged, do not operate the charger until you obtain a replacement.

Charging the Batteries

To reduce the risk of electric shock, this charger has a 3-prong grounded plug (type B). If the plug does not fit into the wall receptacle, other grounded plug types are available; contact an Authorized Service Dealer.

Do not change the charger or the power-supply cord plug in any way.

Important: **Check the power-supply cord periodically for holes or cracks in the insulation. Do not use a damaged cord. Do not run the cord through standing water or wet grass.**

Recommended temperature range for full-power charging: 0° to 26.6°C (32° to 80°F)

For ideal charging performance, charge the batteries in temperatures within the recommended full-power range. Charging the batteries in temperatures beyond the recommended range can result in reduced charging performance.

1. Park the machine in the designated location for charging.
2. Shut off the machine and remove the key.
3. Ensure that the battery-disconnect switch is in the ON position.
4. Press the button on the front access door and pull the door open to access the power-supply cord.

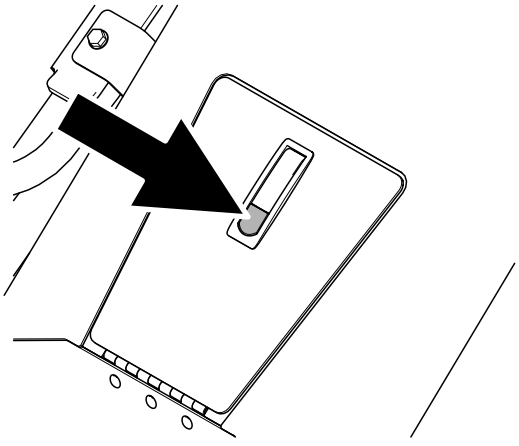

g534668

Figure 27

5. Remove the cover from the charger port.

6. Plug the power-supply cord into the charger port.

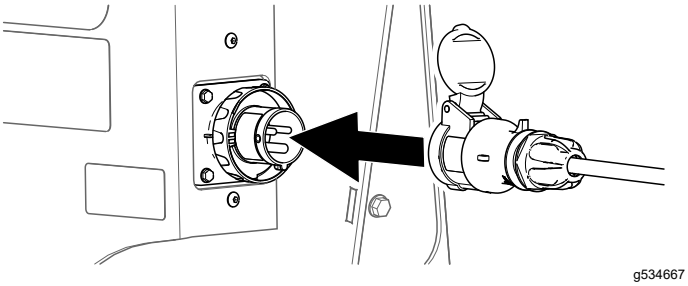

g534667

Figure 28

7. Plug the other end of the power-supply cord into a grounded electrical outlet.
8. Observe the InfoCenter to ensure that the batteries are charging.

   Note: The InfoCenter shows the battery charge percentage and amperage. There may be a delay before these appear after plugging in the power-supply cord. Batteries with a lower voltage charge first; once they reach the voltage of the other batteries, all batteries charge simultaneously. The fan may turn on while the machine is charging.

   When charging is complete, the InfoCenter shuts off.

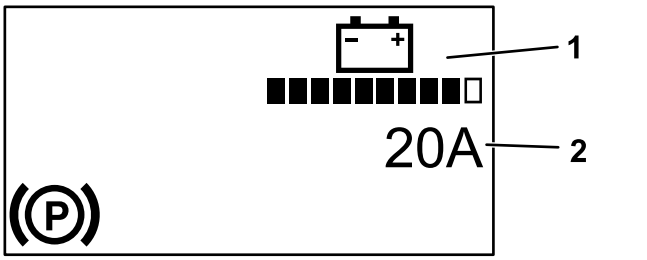

g392265

Figure 29

1. Battery charge
2. Amperage

9. When the machine reaches a sufficient level, disconnect the power-supply cord from the outlet.
10. Disconnect the power-supply cord from the machine and install the cover to the charger port.
11. Store the power-supply cord in the storage compartment.
12. Start the machine.
13. Verify the charge level using the InfoCenter display.

Maintenance

Note: Determine the left and right sides of the machine from the normal operating position.

Maintenance Safety

⚠ CAUTION

If you leave the key in the switch, someone could accidently start the machine and seriously injure you or other bystanders.

Remove the key from the switch before you perform any maintenance.

- Park the machine on a level surface, disengage the auxiliary hydraulics, lower the attachment, ensure that the parking brake is engaged, shut off the machine, and remove the key. Wait for all movement to stop and allow the machine to cool before adjusting, cleaning, storing, or repairing it.
- Do not allow untrained personnel to service the machine.
- Use jack stands to support the components when required.
- Carefully release pressure from components with stored energy.
- Disconnect the battery before making any repairs.
- Keep your hands and feet away from the moving parts. If possible, do not make adjustments with the machine running.
- Keep all parts in good working condition and all hardware tightened. Replace all worn or damaged decals.
- Do not tamper with the safety devices.
- Use only Toro-approved attachments. Attachments can change the stability and the operating characteristics of the machine. You may void the warranty if you use the machine with unapproved attachments.
- Use only genuine Toro replacement parts.
- If any maintenance or repair requires the loader arms to be in the raised position, secure the arms in the raised position with the hydraulic-cylinder lock.
- Refer to local regulations for safely maintaining the machine and attach a warning tag to the control panel to inform others of ongoing maintenance.

Recommended Maintenance Schedule(s)

Maintenance Service Interval	Maintenance Procedure
After the first 8 hours	• Check and adjust the track tension.
After the first 50 hours	• Check and adjust the track tension. • Change the drive-motor gear oil.
Before each use or daily	• Grease the machine. (Grease immediately after every washing.) • Clean the tracks and check for excessive wear and proper tension. • Remove debris from the machine. • Check for loose fasteners.
Every 25 hours	• Check the hydraulic-fluid level.
Every 50 hours	• Check the lead-acid battery condition. • Check and adjust the track tension.
Every 100 hours	• Check the hydraulic lines for leaks, loose fittings, kinked lines, loose mounting supports, wear, weather, and chemical deterioration.
Every 400 hours	• Change the hydraulic fluid (if not using Toro fluid).
Every 500 hours	• Change the drive-motor gear oil. • Replace the hydraulic filter.
Every 1,000 hours	• Change the hydraulic fluid (if using Toro fluid).
Every 1,500 hours or 2 years, whichever comes first	• Replace all moving hydraulic hoses.
Yearly or before storage	• Touch up chipped paint.

Pre-Maintenance Procedures

Using the Cylinder Lock

⚠ WARNING

The loader arms may lower when in the raised position, crushing anyone under them.

Install the cylinder lock before performing maintenance that requires raised loader arms.

Installing the Cylinder Lock

1. Remove the attachment.
2. Raise the loader arms to the fully raised position.
3. Shut off the machine and remove the key.
4. Position the cylinder lock over the lift-cylinder rod.

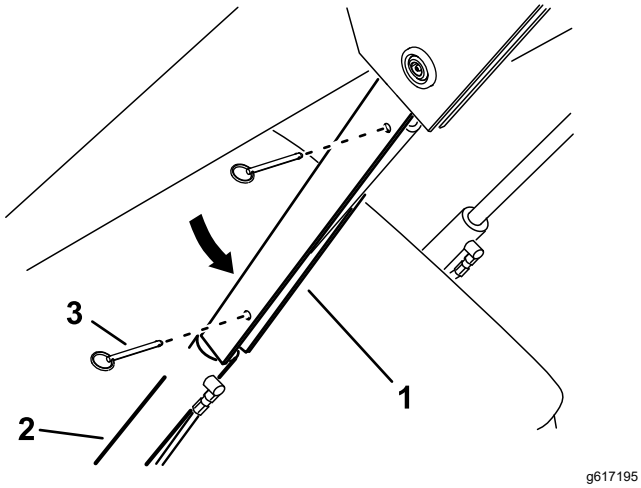

Figure 30

1. Cylinder lock
2. Lift-cylinder rod
3. Pin (2)

5. Secure the cylinder lock with 2 pins.
6. **Slowly** lower the loader arms until the cylinder lock contacts the cylinder body and rod ends.

Removing and Storing the Cylinder Lock

Important: **Remove the cylinder lock from the rods and fully secure in the storage position before operating the machine.**

1. Start the machine.
2. Raise the loader arms to the fully raised position.
3. Shut off the machine and remove the key.
4. Remove the pins securing the cylinder lock.
5. Remove the cylinder lock.
6. Place the cylinder lock on the post on the side of the machine and secure with the pins.
7. Lower the loader arms.

Accessing Internal Components

⚠ WARNING

Opening or removing covers, hoods, and screens while the machine is running could allow you to contact moving parts, seriously injuring you.

Before opening any of the covers, hoods, and screens, shut off the machine, remove the key from the key switch, and allow the machine to cool.

Releasing the Rear Cushion

1. Park the machine on a level surface.
2. Shut off the machine, remove the key, and wait for moving parts to stop.
3. Lower the platform.
4. Loosen the knobs on each side of the cushion.

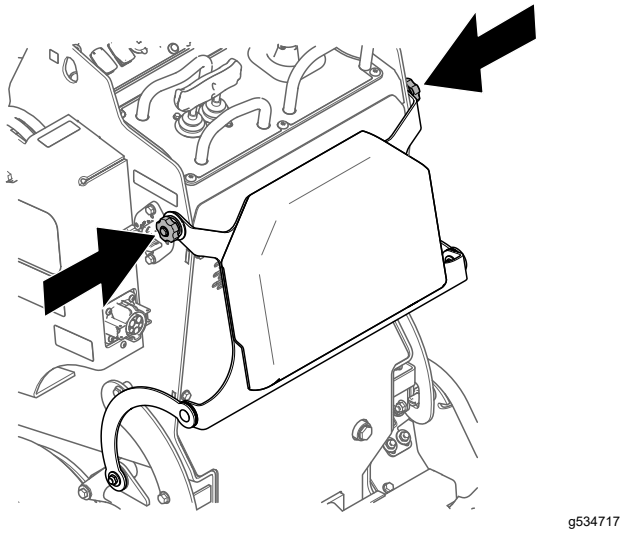

g534717

Figure 31

5. Lower the cushion to the platform.

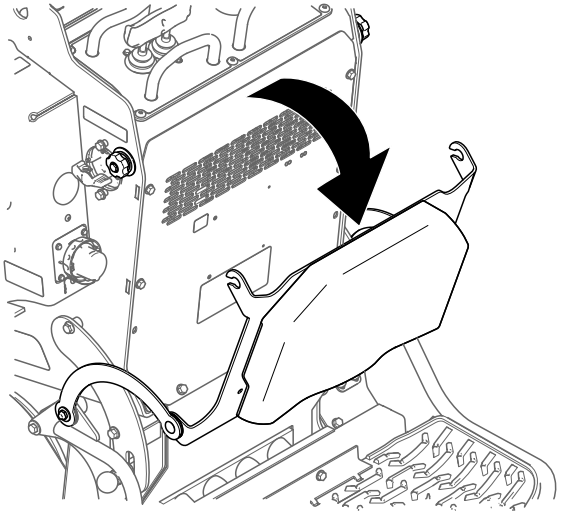

g534719

Figure 32

6. Perform any maintenance or adjustment on the machine.
7. Raise the cushion, and slide it onto the pins on both sides of the machine.
8. Tighten the knobs.

Removing the Rear Cover

1. Park the machine on a level surface.
2. Shut off the machine, remove the key, and wait for moving parts to stop.
3. Lower the platform.
4. Release the rear cushion.
5. Remove the bolts securing the rear cover and remove the cover.

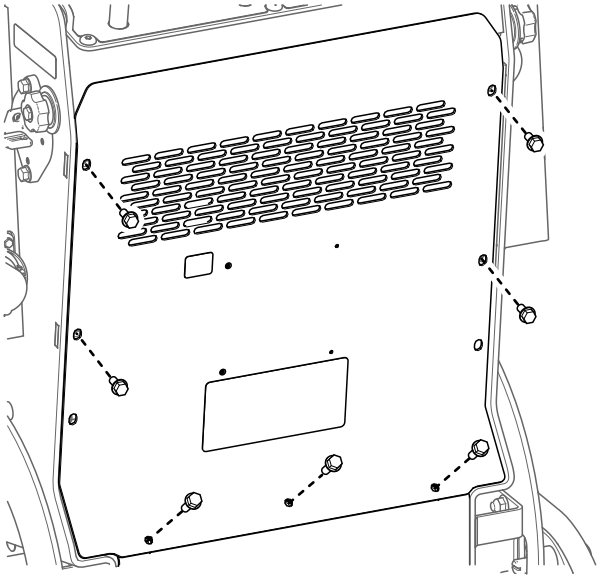

g534718

Figure 33

Lubrication

Greasing the Machine

Service Interval: Before each use or daily (Grease immediately after every washing.)

Grease Type: General-purpose grease

1. Park the machine on a level surface and lower the loader arms.
2. Shut off the machine and remove the key.
3. Clean the grease fittings with a rag.
4. Connect a grease gun to each fitting.

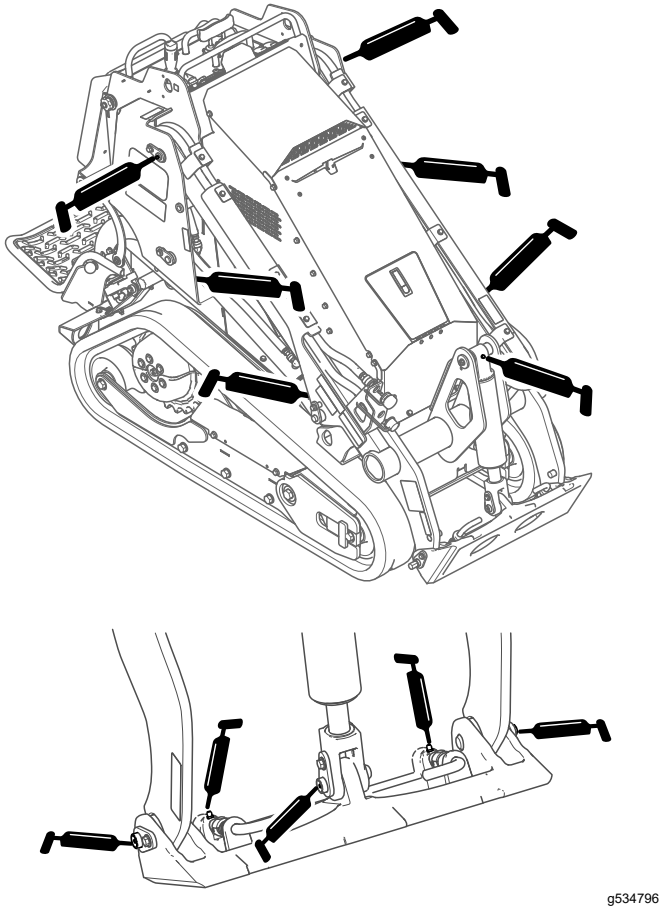

g534796

Figure 34

5. Pump grease into the fittings until grease begins to ooze out of the bearings (approximately 3 pumps).
6. Wipe up any excess grease.

Electrical System Maintenance

Electrical System Safety

- Disconnect the battery before making any repairs.
- Charge the battery in an open, well-ventilated area, away from sparks and flames. Unplug the charger before connecting or disconnecting the battery. Wear protective clothing and use insulated tools.
- Battery acid is poisonous and can cause burns. Avoid contact with skin, eyes, and clothing. Protect your face, eyes, and clothing when working with a battery.
- Battery gases can explode. Keep cigarettes, sparks, and flames away from the battery.

Using the Battery-Disconnect Switch

1. Park the machine on a level surface and lower the loader arms.
2. Shut off the machine and remove the key.
3. Turn the battery-disconnect switch to the ON or OFF position.
   - To energize the machine electrically, rotate the battery-disconnect switch clockwise to the ON position.
   - To de-energize the machine electrically, rotate the battery-disconnect switch counterclockwise to the OFF position.

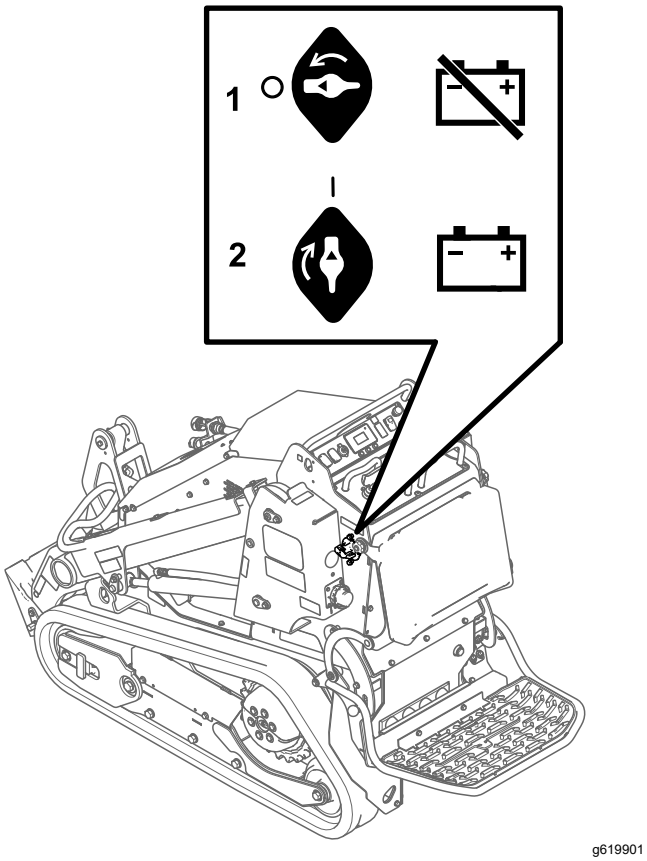

g619901

Figure 35

1. Battery-disconnect switch—OFF position
2. Battery-disconnect switch—ON position

Servicing the Lead-Acid Battery

Service Interval: Every 50 hours

Removing the Battery

⚠ WARNING

Incorrect battery cable routing could damage the machine and cables, causing sparks. Sparks could cause the battery gasses to explode, resulting in death or serious injury.

Always disconnect the negative (black) battery cable before disconnecting the positive (red) cable.

1. Park the machine on a level surface and lower the loader arms.
2. Shut off the machine and remove the key.
3. Remove the top cover assembly.

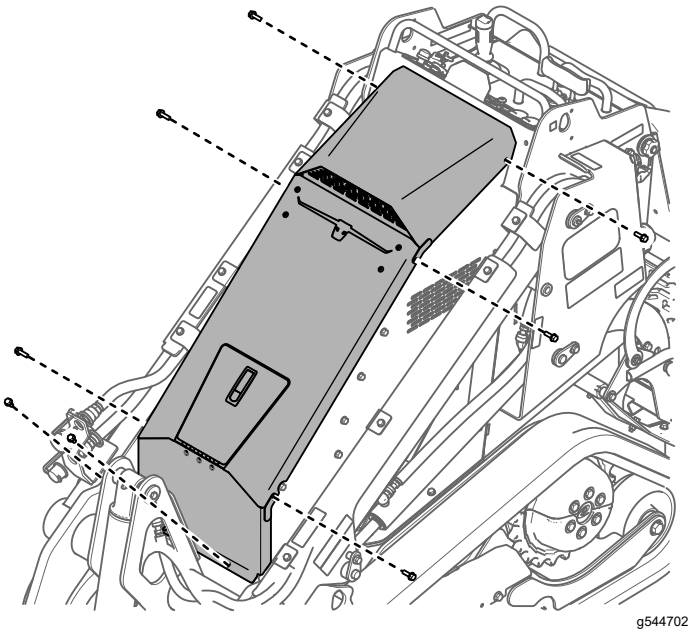

g544702

Figure 36

4. Disconnect the negative (black) ground cable from the battery post. Retain the fasteners.

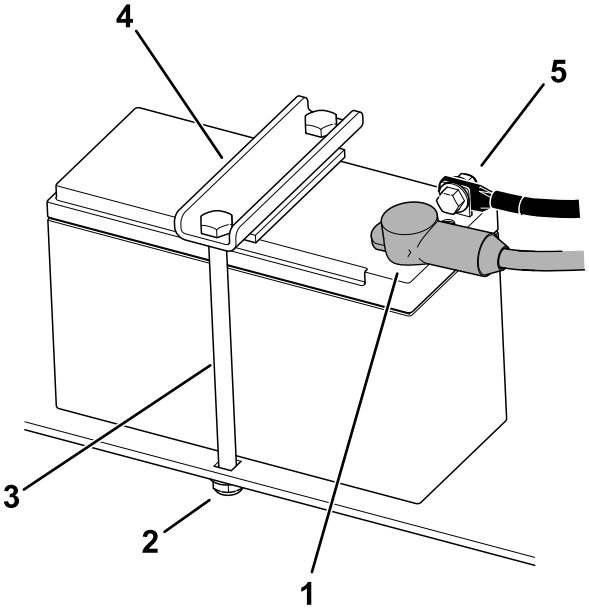

g544607

Figure 37

1. Positive cable
2. Nut (2)
3. Rod (2)
4. Battery clamp
5. Negative cable

5. Slide the rubber cover off the positive (red) cable.
6. Disconnect the positive (red) cable from the battery post. Retain the fasteners.
7. Remove the battery clamp.
8. Remove the battery.

Charging the Battery

⚠ WARNING

Charging the battery produces gasses that could explode, resulting in death or serious injury.

Never smoke near the battery and keep sparks and flames away from battery.

Important: **Always keep the battery fully charged (1.265 specific gravity). This is especially important to prevent battery damage when the temperature is below 0°C (32°F).**

1. Remove the battery from the machine.
2. Charge the battery for 4 to 8 hours at a rate of 3 to 4 A (Figure 38). Do not overcharge the battery.

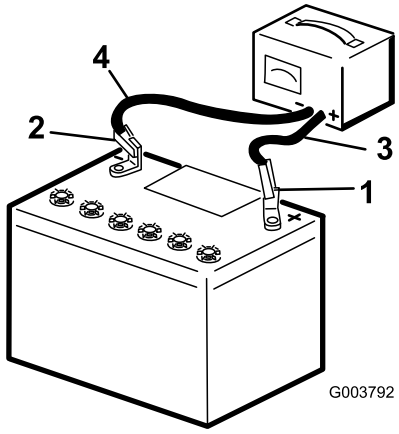

g003792

Figure 38

1. Positive battery post
2. Negative battery post
3. Red (+) charger lead
4. Black (-) charger lead

3. When the battery is fully charged, unplug the charger from the electrical outlet, then disconnect the charger leads from the battery posts as shown.

Cleaning the Battery

Note: Keep the terminals and the entire battery case clean, to help extend battery life.

1. Park the machine on a level surface, lower the loader arms, and engage the parking brake.
2. Shut off the engine and remove the key.
3. Remove the battery from the machine.
4. Wash the entire case with a solution of baking soda and water.
5. Rinse the battery with clear water.
6. Coat the battery posts and cable connectors with Grafo 112X (skin-over) grease or petroleum jelly to prevent corrosion.
7. Install the battery.

Installing the Battery

⚠ WARNING

Incorrect battery cable routing could damage the machine and cables, causing sparks. Sparks could cause the battery gasses to explode, resulting in death or serious injury.

Always connect the positive (red) battery cable before connecting the negative (black) cable.

1. Place the battery on the battery tray and secure it with the clamp.

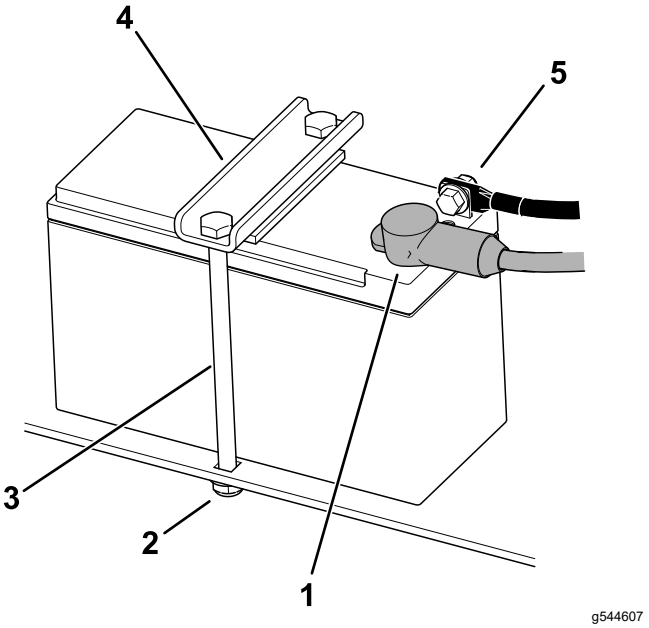

g544607

Figure 39

1. Positive cable
2. Nut (2)
3. Rod (2)
4. Battery clamp
5. Negative cable

2. Using the fasteners previously removed, install the positive (red) battery cable to the positive (+) battery terminal.
3. Slide the red terminal boot onto the positive battery post.
4. Using the fasteners previously removed, install the negative (black) battery cable to the negative (-) battery terminal.
5. Install the top cover assembly.

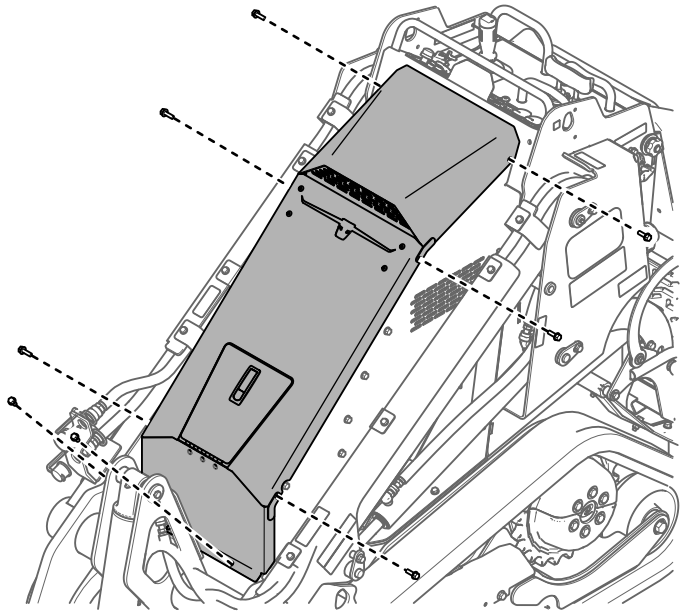

Figure 40

Servicing a Replacement Battery

The original battery is maintenance-free and does not require service. For servicing a replacement battery, refer to the battery manufacturer's instructions.

Servicing the Lithium-Ion Batteries

Note: The machine is equipped with 10 lithium-ion batteries.

A lithium-ion battery must be disposed of or recycled in accordance with local and federal regulations. If a battery requires service, contact your Authorized Service Dealer for assistance.

Do not open the battery. If you are having problems with a battery, contact your Authorized Service Dealer for assistance.

Maintaining the Lithium-Ion Batteries

⚠ WARNING

The batteries contain high voltage, which could burn or shock you.

- **Do not attempt to open the batteries.**
- **Use extreme care when handling a battery with a cracked case.**
- **Use only the charger designed for the batteries.**

The lithium-ion batteries hold a sufficient charge to perform intended work during its life span.

To achieve maximum life and use from your batteries, follow these guidelines:

- Do not open the battery.
- Store/park the machine in a clean, dry garage or storage area, **away from direct sunlight, heat sources, rain, and wet conditions.** Do not store it in a location where the temperature exceeds the range specified Storage Safety (page 50).

  Important: **Temperatures outside of this range will damage your batteries. High temperatures during storage, especially at a high state of charge, reduces the life of the batteries.**
- When storing the machine for more than 10 days, ensure that the machine is in a cool and dry location, out of sunlight, rain, and wet conditions.
- If you are using the machine hot conditions or in strong, direct sunlight, the battery may overheat. If this happens, a high-temperature alert appears on the InfoCenter and machine functionality may be reduced.

  Immediately drive the machine to a cool location out of the sun, turn off the machine, and allow the batteries to cool fully before resuming operation. If the batteries continue to overheat, another alert appears on the InfoCenter and the machine will shut off.
- Use lights only when it is necessary.

Maintaining the Battery Charger

Important: **All electrical repairs should be performed by an Authorized Service Dealer only.**

The charger requires little maintenance other than protecting it from damage and weather.

- Coil the cord and place it into the storage compartment when not in use.
- Periodically examine the cord for damage, and replace them when necessary with Toro-approved parts.

Servicing the Fuses

The electrical system is protected by fuses. It requires no maintenance. Refer to the traction unit *Service Manual* for information on testing and servicing the bolt-in fuses

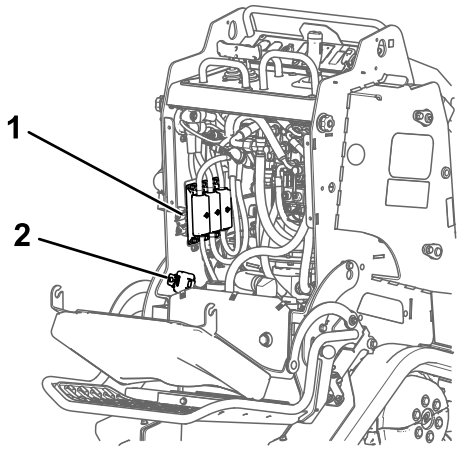

g544543

Figure 41

1. Bolt-in fuses
2. Blade fuses

1. Park the machine on a level surface and lower the loader arms.
2. Shut off the machine and remove the key.
3. Turn the battery-disconnect switch to the OFF position.
4. Release the rear cushion and remove the rear cover; refer to Removing the Rear Cover (page 32).
5. Replace fuses as needed.

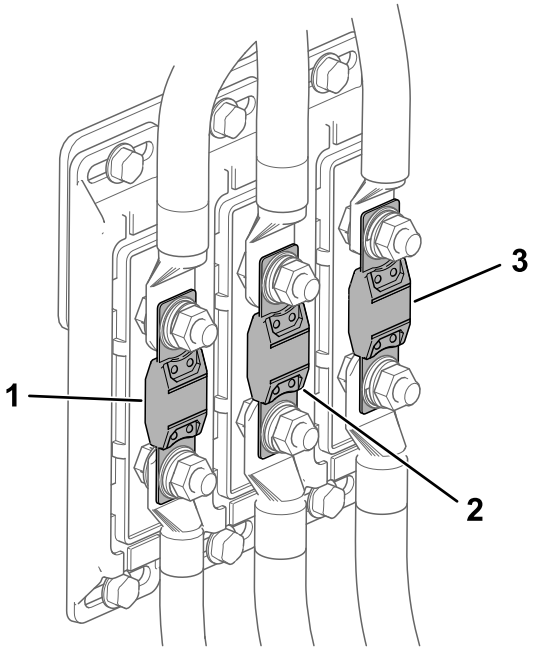

g559675

Figure 42

Bolt-in fuses

1. Traction fuse (250 A)
2. System power fuse (350 A)
3. Auxiliary hydraulics fuse (250 A)

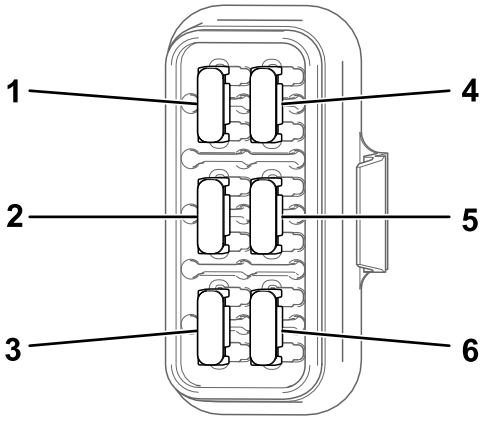

g544544

Figure 43

Blade fuses

1. Logic (7.5 A)
2. Fan (15 A)
3. Lights (7.5 A)
4. Telematics (2 A)
5. Powerpoint (7.5 A)
6. Horn (15 A)

6. Turn the battery-disconnect switch to the ON position.
7. Install the rear cover and the cushion.

Drive System Maintenance

Servicing the Tracks

Service Interval: After the first 8 hours—Check and adjust the track tension.

After the first 50 hours—Check and adjust the track tension.

Every 50 hours—Check and adjust the track tension.

Before each use or daily—Clean the tracks and check for excessive wear and proper tension.

Cleaning the Tracks

1. Park the machine on a level surface.
2. With the bucket installed and angled downward, lower it into the ground so that the front of the traction unit lifts off the ground a few centimeters (inches).
3. Shut off the machine and remove the key.
4. Using a water hose or pressure washer, remove dirt from each track system.

Important: **Ensure that you use high-pressure water to wash only the track area. Do not use a high-pressure washer to clean the rest of the traction unit. Do not use high-pressure water between the drive sprocket and the traction unit or you may damage the motor seals. High-pressure washing can damage the electrical system and hydraulic valves or deplete grease.**

Important: **Ensure that you fully clean the road wheels, front wheel, rear wheel, and drive sprocket. The road wheels should rotate freely when clean.**

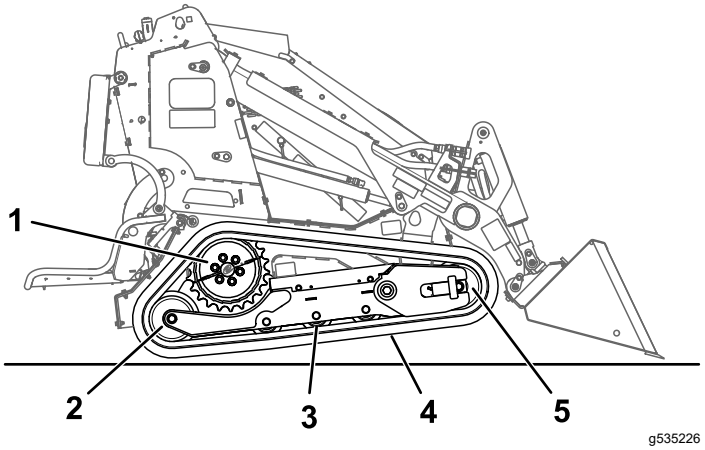

Figure 44

1. Sectional drive sprocket
2. Rear wheel
3. Road wheel (4)
4. Track
5. Front wheel

Checking and Adjusting the Track Tension

Lift/support 1 side of the machine and use the weight of the track to verify that the gap between the bottom of the road-wheel lip and the track is 19 mm (3/4 inch). If it is not, adjust the track tension using the following procedure.

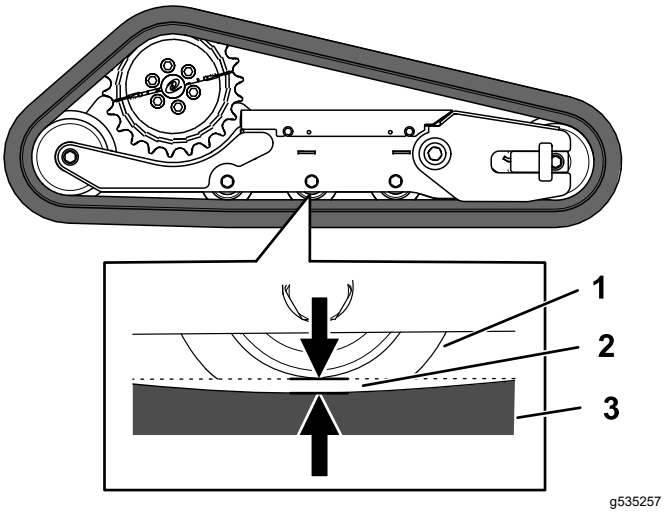

Figure 45

1. Road wheel
2. 19 mm (3/4 inch) gap
3. Track

1. Park the machine on a level surface and lower the loader arms.
2. Shut off the machine and remove the key.
3. Raise the side of the machine that you are adjusting so that the track is off the ground.

4. Loosen the bolts on the cover and remove the cover.

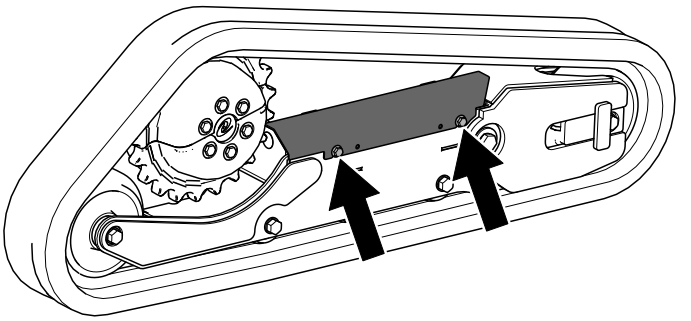

g535258

Figure 46

5. Loosen the jam nut and adjust the tensioning screw until the track deflection is 19 mm (3/4 inch).

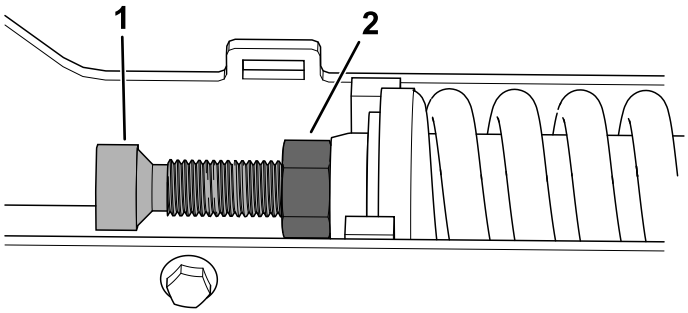

g535259

Figure 47

1. Tensioning screw
2. Jam nut

6. Tighten the jam nut.
7. Install the cover and tighten the bolts.
8. Repeat the procedure for the other track.
9. Drive the machine, then park the machine on a level surface, shut off the machine, and remove the key.
10. Verify that the track deflection is 19 mm (3/4 inch). Adjust if necessary.

Replacing the Tracks

Removing the Tracks

1. Remove any attachments.
2. Park the machine on a level surface, ensuring that only 1 sprocket half is engaged with the track.

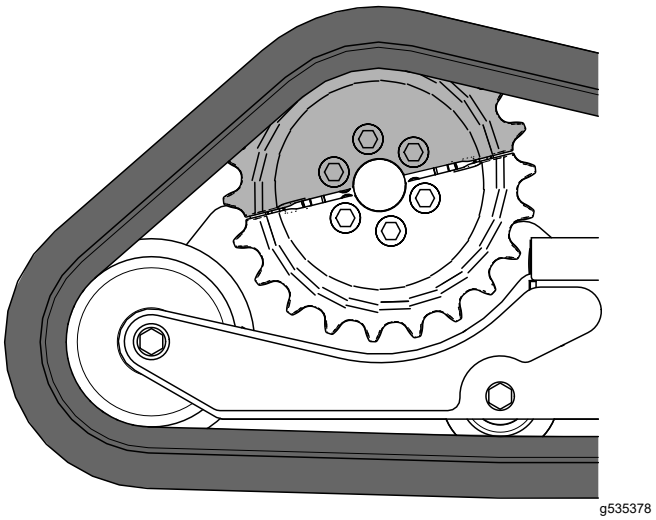

g535378

Figure 48

3. Lower the loader arms.
4. Shut off the machine and remove the key.
5. Raise the machine off the ground so that the bottom of the track is at least 10.2 cm (4 inches) off the ground. Support the machine using jack stands.

   Note: Use jack stands rated for your machine.

⚠ WARNING

Mechanical or hydraulic jacks may fail to support the machine and cause serious injury.

Use jack stands when supporting the machine.

6. Remove and retain the 4 bolts securing the fender to the frame and remove the fender.

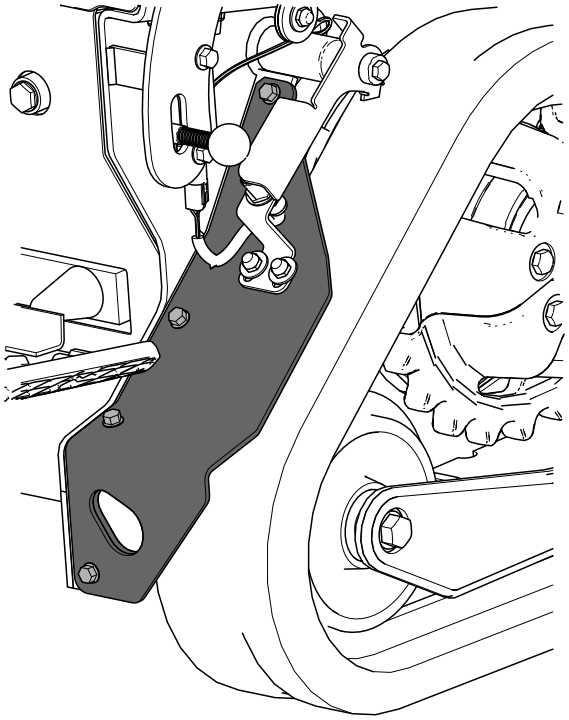

g559712

Figure 49

7. Loosen the bolts on the cover and remove the cover.

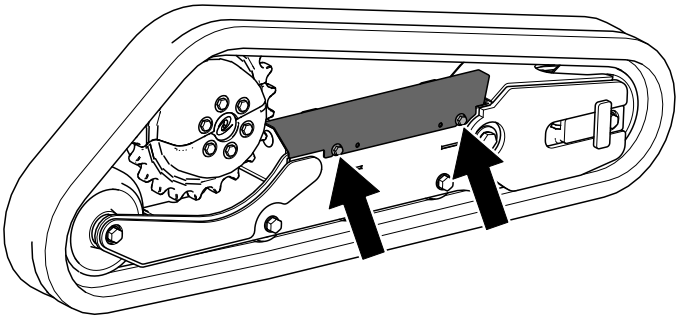

g535258

Figure 50

8. Loosen the jam nut and turn the tensioning screw to release the tension.

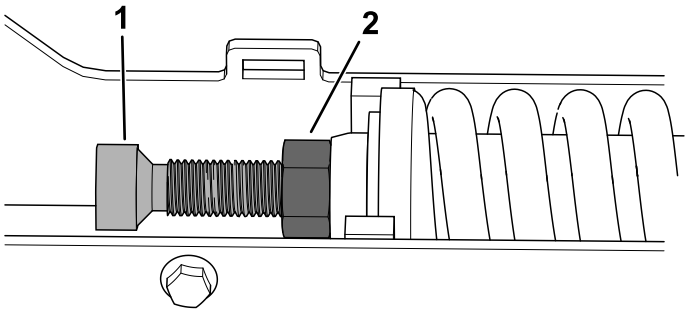

g535259

Figure 51

1. Tensioning screw
2. Jam nut

9. Remove the segment of the drive sprocket not engaged with the track.

Important: **If you do not remove the sprocket segment, it may be difficult to install a new track without damaging it.**

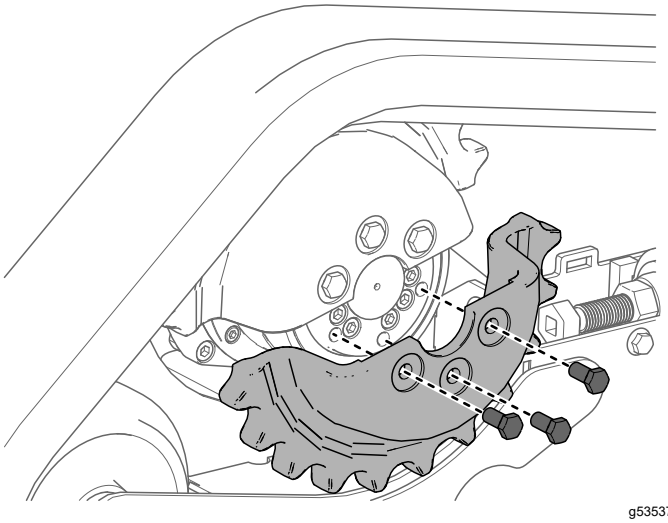

g535376

Figure 52

10. Start the machine and enable the traction control.
11. Move the traction control forward until the other half of the drive sprocket is not engaged with the track

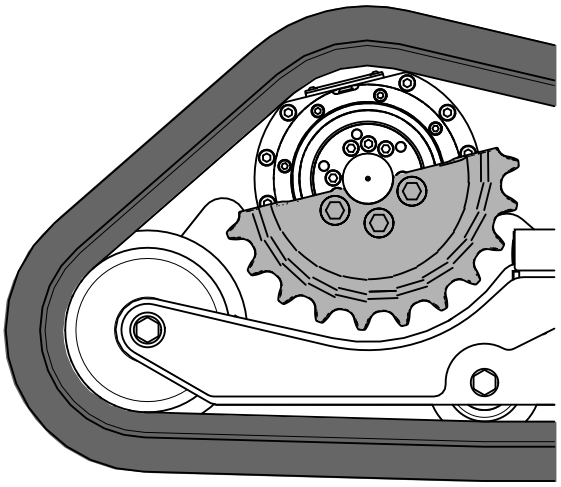

g535377

Figure 53

12. Shut off the machine and remove the key.
13. Remove the track from the track frame, drive hub, then front wheel.

Installing the Tracks

1. Wrap the new track around the front wheel.

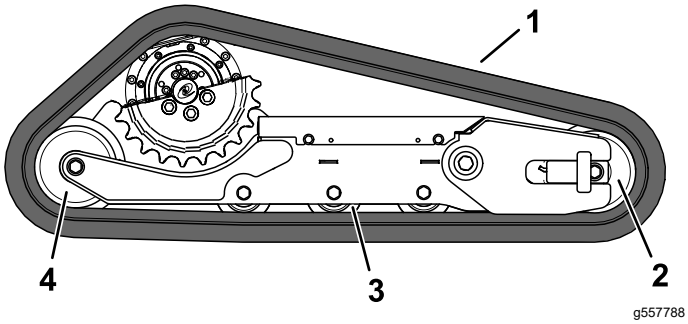

g557788

Figure 54

1. Track
2. Front wheel
3. Road wheel (3)
4. Rear wheel

2. Push the track under and between the road wheels and wrap it around the rear wheel.
3. Pry the track onto the drive hub.
4. Start the machine.
5. Move the traction control forward until the drive sprocket half engages with the track.

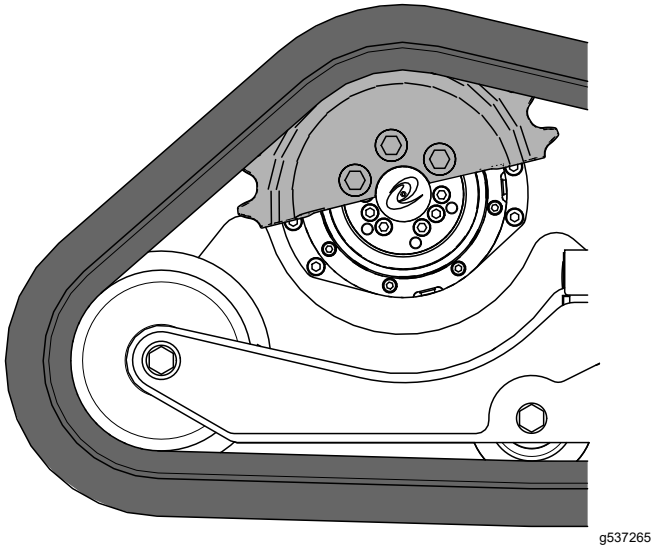
g537265

Figure 55

6. Shut off the machine and remove the key.
7. Apply thread-locking compound to the bolts of the drive sprocket half that you removed and install the sprocket half. Torque the bolts to 80 to 99 N·m (59 to 73 ft-lb).

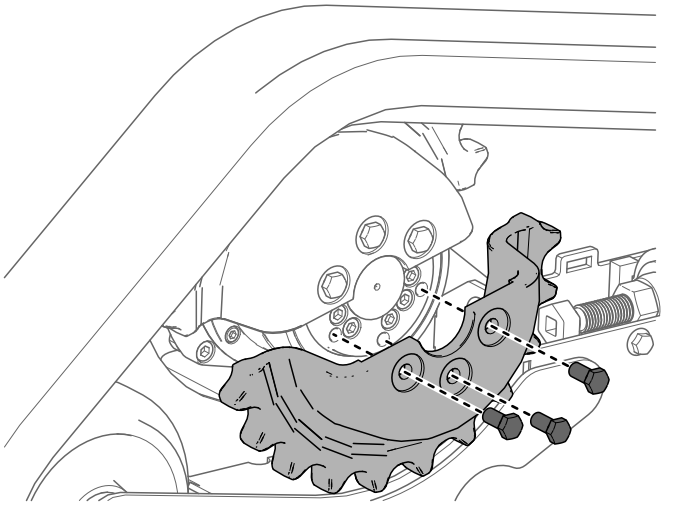
g535376

Figure 56

8. Adjust the tensioning screw until the track deflection is 19 mm (3/4 inch).

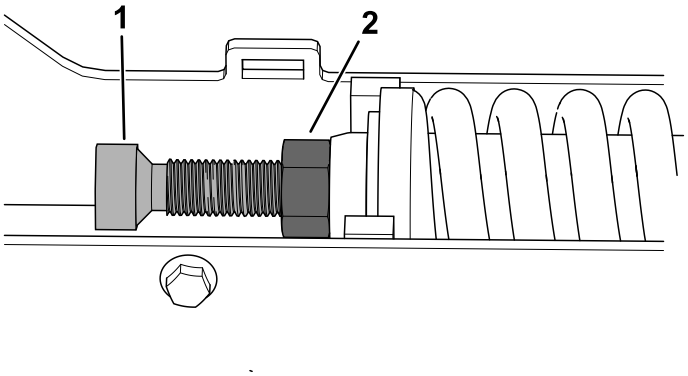

g535259

Figure 57

1. Tensioning screw
2. Jam nut

9. Tighten the jam nut.
10. Install the cover and tighten the bolts.

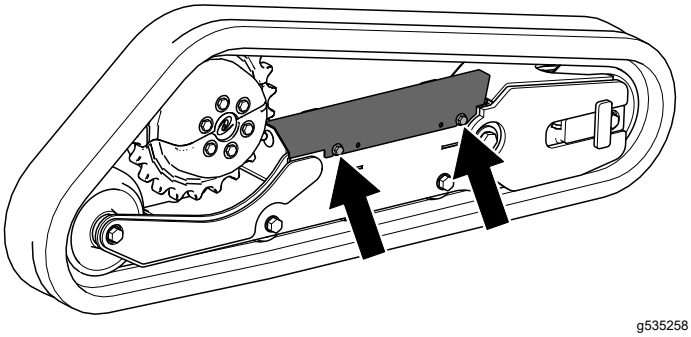
g535258

Figure 58

11. Install the fender to the machine using the retained bolts.

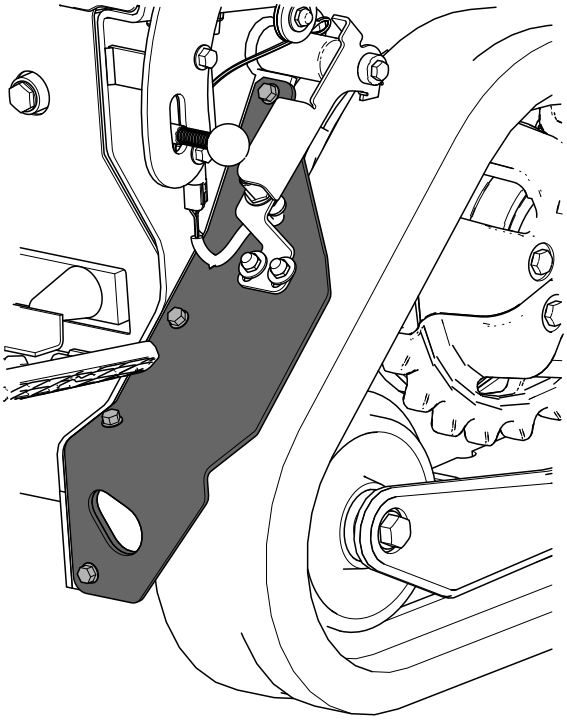

g559712

Figure 59

12. Repeat the procedure to replace the other track.
13. Lower the machine to the ground.
14. Drive the machine, then park the machine on a level surface, shut off the machine, and remove the key.
15. Verify that the track tension is correct; refer to Checking and Adjusting the Track Tension (page 38).

Drive-Motor Gear Oil Specifications

Oil type: Mobil SHC 75W-90

Capacity: 0.18 L (6.1 fl oz) per gearbox

Checking the Drive-Motor Gear Oil

1. Remove any attachments.
2. Park the machine on a level surface, ensuring that only 1 sprocket half is engaged with the track.

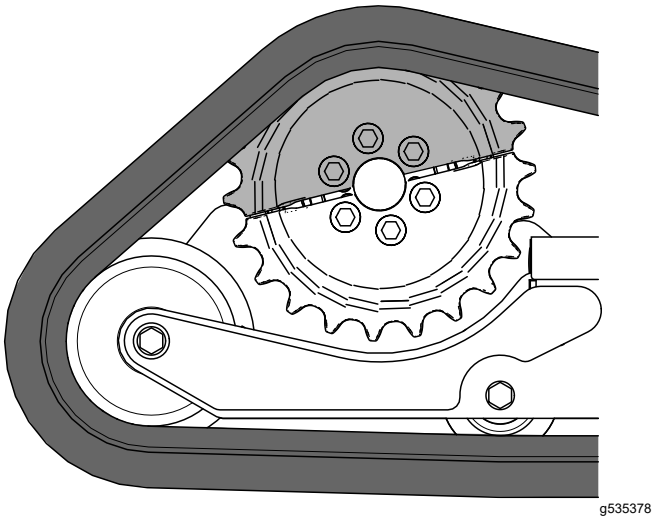

g535378

Figure 60

3. Shut off the machine and remove the key.
4. Raise the machine off the ground so that the tracks are off the ground. Support the machine using jack stands.

   Note: Use jack stands rated for your machine weight.

   ⚠ WARNING

   Mechanical or hydraulic jacks may fail to support the machine and cause serious injury.

   Use jack stands when supporting the machine.

5. Remove the segment of the drive sprocket not engaged with the track.

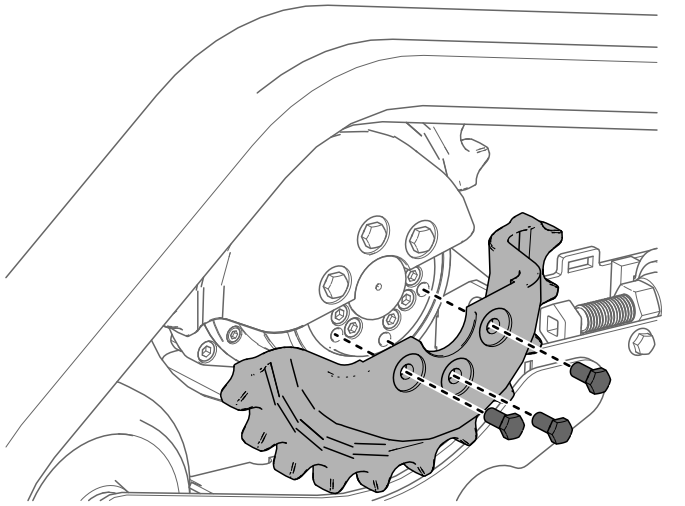

g535376

Figure 61

6. Remove the check plug and verify that the oil is at the bottom of the hole.

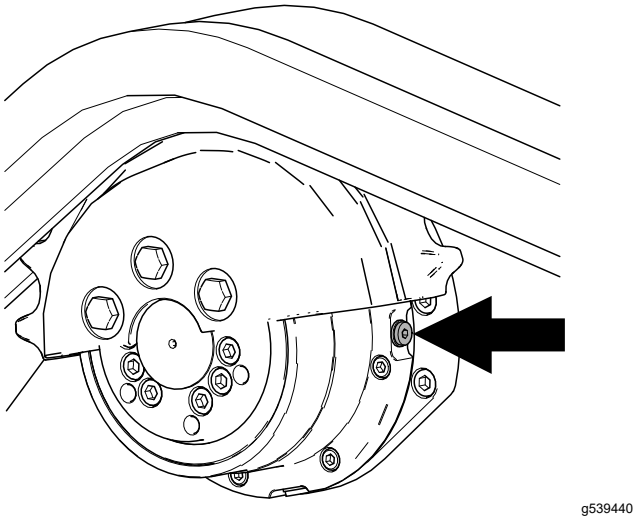

g539440

Figure 62

7. If the level is low, add fluid as follows:
   A. Remove the track.
   B. Remove the second sprocket.
   C. Remove the fill plug.

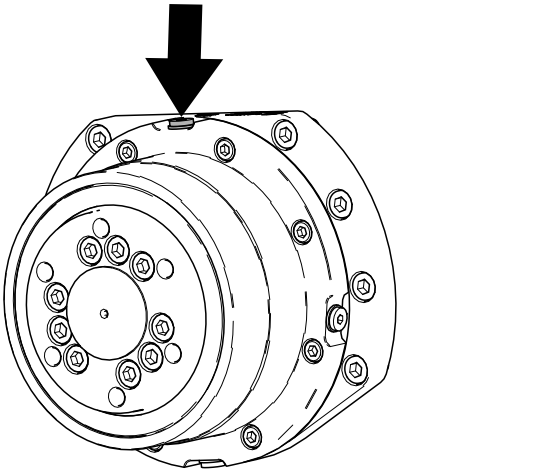

g539439

Figure 63

   D. Fill the drive motor with gear oil until it reaches the bottom of the check hole.
   E. Install the fill and check plugs.
8. Repeat the steps 5 through 7 for the other drive motor.
9. Start the machine and engage the traction control for a few minutes.
10. Shut off the machine and remove the key.
11. Remove the check plugs from both traction motors and verify that the oil level is at the bottom of the hole.
12. Install the plugs and torque them to 5 to 6 N·m (50 to 60 in-lb).
13. Apply thread-locking compound to the bolts of the lower drive sprocket and install the sprocket. Torque the bolts to 80 to 99 N·m (59 to 73 ft-lb).
14. Install the tracks, if removed; refer to Installing the Tracks (page 40).
15. Lower the machine to the ground.

Changing the Drive-Motor Gear Oil

Service Interval: After the first 50 hours

Every 500 hours

1. Remove any attachments.
2. Start the engine and drive the machine for 5 minutes.

   Note: This warms the gear oil so that it drains better.
3. Park the machine on a level surface, ensuring that only 1 sprocket half is engaged with the track.

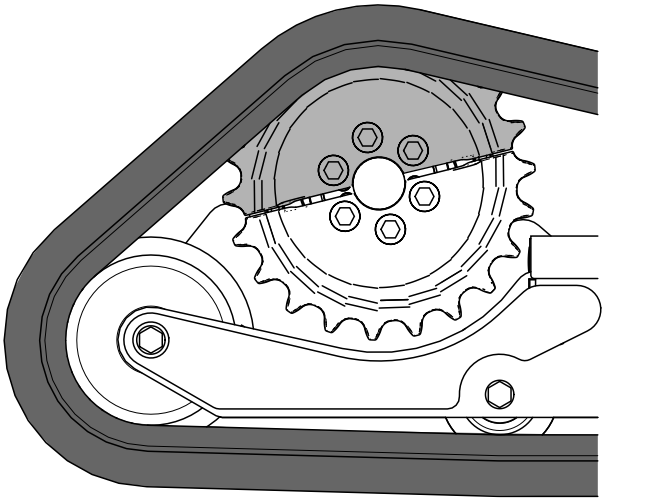

g535378

Figure 64

4. Shut off the machine and remove the key.
5. Remove the track; refer to Removing the Tracks (page 39).
6. Remove the second sprocket.
7. Place a drain pan under the drive motor.
8. Remove the fill and drain plugs and allow the gear oil to drain.

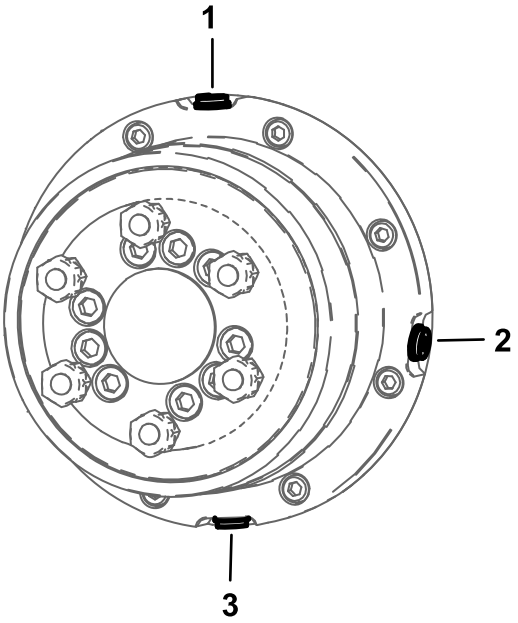

g557622

Figure 65

1. Fill plug
2. Check plug
3. Drain plug

9. Install the drain plug.
10. Remove the fill plug and fill the drive motor with gear oil until the oil starts dripping from the check hole; refer to Drive-Motor Gear Oil Specifications (page 42)..
11. Install the fill and check plugs.
12. Repeat the procedure for the other drive motor.
13. Start the machine and engage the traction control for a few minutes.
14. Shut off the machine and remove the key.
15. Remove the check plugs from both traction motors and verify that the oil level is at the bottom of the hole.
16. Install the plugs and torque them to 5 to 6 N·m (50 to 60 in-lb).
17. Apply thread-locking compound to the bolts of the lower drive sprocket half and install the sprocket half. Torque the bolts to 80 to 99 N·m (59 to 73 ft-lb).
18. Install the tracks; refer to Installing the Tracks (page 40).
19. Lower the machine to the ground.

Controls System Maintenance

Adjusting the Controls

The factory adjusts the controls before shipping the machine. However, after many hours of use, you may need to adjust the traction control alignment, the NEUTRAL position of the traction control, and the tracking of the traction control in the full forward position.

Contact your Authorized Service Dealer to adjust the controls of your machine.

Hydraulic System Maintenance

Hydraulic System Safety

- Seek immediate medical attention if fluid is injected into skin. Injected fluid must be surgically removed within a few hours by a doctor.
- Ensure that all hydraulic-fluid hoses and lines are in good condition and all hydraulic connections and fittings are tight before applying pressure to the hydraulic system.
- Keep your body and hands away from pinhole leaks or nozzles that eject high-pressure hydraulic fluid.
- Use cardboard or paper to find hydraulic leaks.
- Safely relieve all pressure in the hydraulic system before performing any work on the hydraulic system.

Relieving Hydraulic Pressure

To relieve hydraulic pressure while the machine is on, disengage the auxiliary hydraulics and fully lower the loader arms; turn the key switch to the AUXILIARY HYDRAULIC RELIEF position and press the auxiliary-hydraulic switch back and forth.

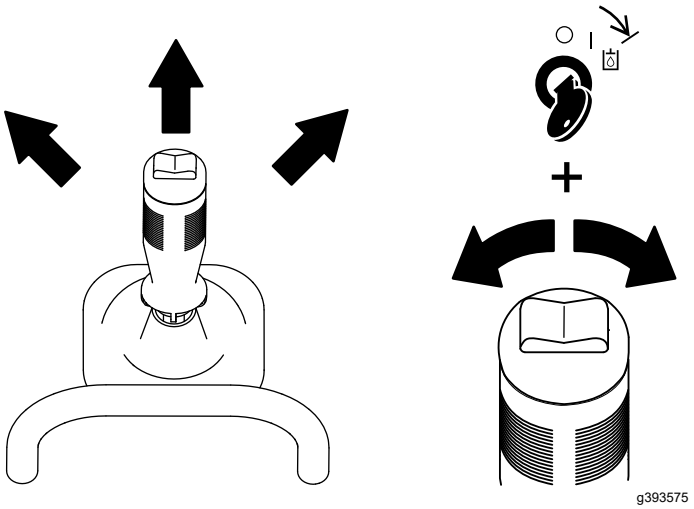

g393575

Figure 66

To relieve hydraulic pressure while the machine is off, turn the key switch to the AUXILIARY HYDRAULIC RELIEF position and press the auxiliary-hydraulic switch back and forth.

Lowering the Loader Arms Without Power

1. Park the machine on a level surface.
2. Shut off the machine and remove the key.
3. Release the cushion and remove the rear cover; refer to Removing the Rear Cover (page 32).
4. Loosen the bypass valve.

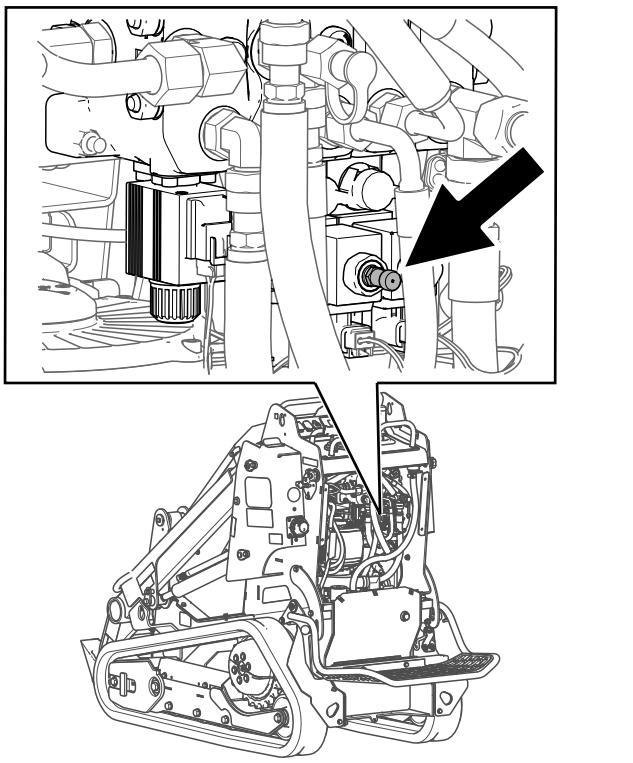

g621130

Figure 67

5. Lower the loader arms.
6. Tighten the bypass valve.
7. Install the rear cover and the cushion.

Hydraulic Fluid Specifications

Hydraulic Tank Capacity: 22.7 L (6 US gallons)

Recommended hydraulic fluid: Toro PX Extended Life Hydraulic Fluid

Note: A machine using the recommended replacement fluid requires less frequent fluid and filter changes.

Alternative hydraulic fluids: If Toro PX Extended Life Hydraulic Fluid is not available, you may use another conventional, petroleum-based hydraulic fluid having specifications that fall within the listed range for all the following material properties and that it meets industry standards. Do not use synthetic fluid. Consult with your lubricant distributor to identify a satisfactory product.

Note: Toro does not assume responsibility for damage caused by improper substitutions, so use products only from reputable manufacturers who will stand behind their recommendation.

High Viscosity Index/Low Pour Point Anti-wear Hydraulic Fluid, ISO VG 46

Material Properties:

Viscosity, ASTM D445	cSt @ 40°C (104°F) 44 to 48
Viscosity Index ASTM D2270	140 or higher
Pour Point, ASTM D97	-37°C to -45°C (-34°F to -49°F)
Industry Specifications:	Eaton Vickers 694 (I-286-S, M-2950-S/35VQ25 or M-2952-S)

Note: Many hydraulic fluids are almost colorless, making it difficult to spot leaks. A red dye additive for the hydraulic fluid is available in 20 ml (0.67 fl oz) bottles. A bottle is sufficient for 15 to 22 L (4 to 6 US gallons) of hydraulic fluid. Order Part No. 44-2500 from your Authorized Service Dealer.

Checking the Hydraulic-Fluid Level

Service Interval: Every 25 hours

Check the hydraulic-fluid level before the machine is first started and after every 25 operating hours.

Important: **Always use the correct hydraulic fluid. Unspecified fluids will damage the hydraulic system.**

1. Park the machine on a level surface and lower the loader arms.
2. Shut off the machine, remove the key, and allow the machine to cool.
3. Look into the glass bubble near the platform. If the hydraulic fluid fills less than half of the bubble, add fluid as follows:

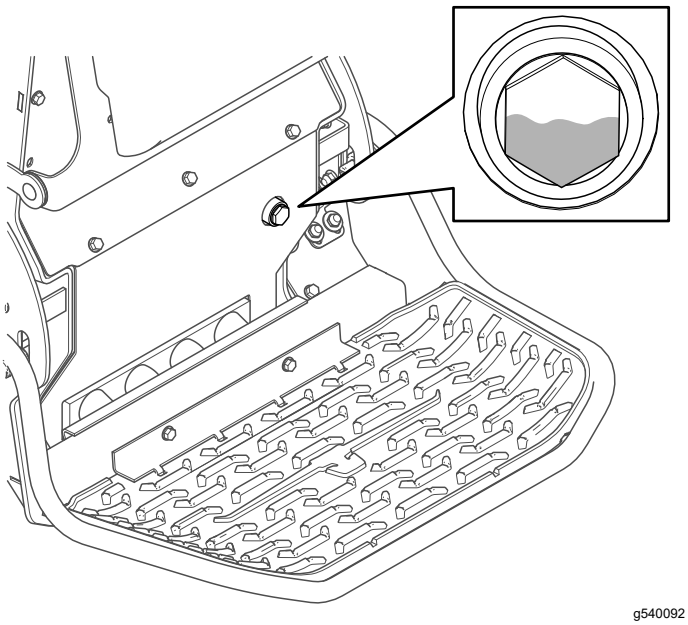

g540092

Figure 68

A. Remove the rear cover; refer to Removing the Rear Cover (page 32).

B. Clean the area around the filler cap and remove it.

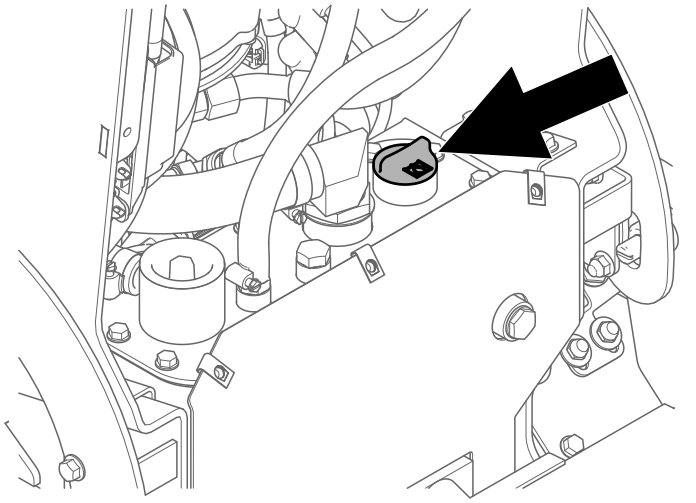

g540091

Figure 69

C. Add hydraulic fluid until it fills half of the glass bubble.

D. Install the filler cap.

E. Install the rear cover.

Replacing the Hydraulic Filter

Service Interval: Every 500 hours

1. Park the machine on a level surface and lower the loader arms.
2. Shut off the machine, remove the key, and allow the machine to cool.
3. Remove the rear cover; refer to Removing the Rear Cover (page 32).
4. Remove and discard the old filter.

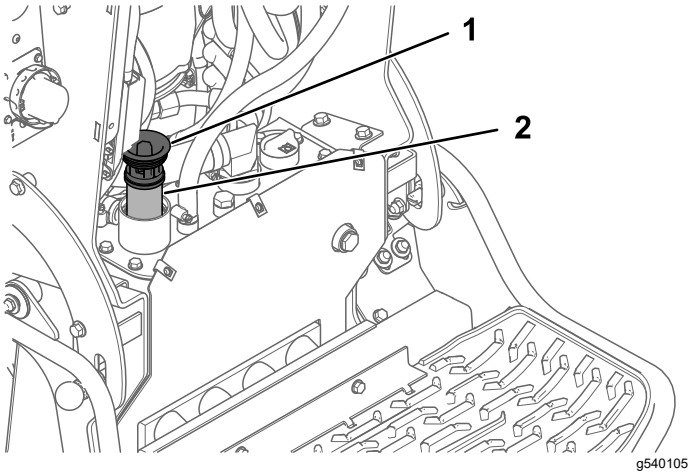

Figure 70

1. Filler cap
2. Hydraulic filter

5. Install the replacement hydraulic filter and filler cap and torque the bolt on top to 13 to 15.5 N·m (110 to 140 in-lb).
6. Clean up any spilled fluid.
7. Start the machine and let it run for about 2 minutes to purge air from the system.
8. Shut off the machine and check for leaks.
9. Check the fluid level in the hydraulic tank. Add hydraulic fluid until it is visible in the glass bubble.
10. Install the rear cover.

Changing the Hydraulic Fluid

Service Interval: Every 400 hours—Change the hydraulic fluid (if not using Toro fluid).

Every 1,000 hours—Change the hydraulic fluid (if using Toro fluid).

1. Park the machine on a level surface and lower the loader arms.
2. Shut off the machine, remove the key, and allow the machine to cool.
3. Remove the rear cover; refer to Removing the Rear Cover (page 32).
4. Place a large drain pan under the machine that can hold the fluid capacity.
5. Remove the drain plug from the bottom of the hydraulic tank and allow the fluid to completely drain.

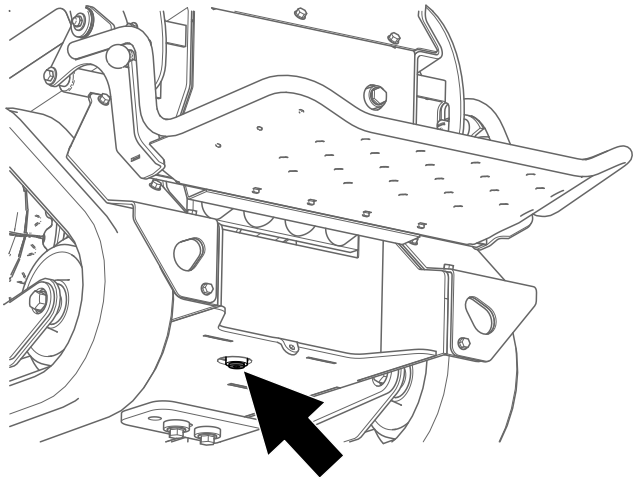

Figure 71

6. Install the drain plug.
7. Fill the hydraulic tank with hydraulic fluid.

   Note: Dispose of used fluid at a certified recycling center.
8. Install the rear cover.

Cleaning

Removing Debris

Service Interval: Before each use or daily

⚠ WARNING

Using compressed air improperly to clean the machine could result in serious injury.

- **Wear appropriate personal protective equipment, such as eye protection, hearing protection, and a dust mask.**
- **Do not aim compressed air at any part of your body or at anyone else.**
- **Refer to the manufacturer's instructions for the air compressor for operating and safety information.**

1. Park the machine on a level surface, remove any attachment, raise the loader arms, and install the cylinder lock.
2. Shut off the machine and remove the key.
3. Clean any debris from the machine.

   Important: **Blow the dirt out rather than wash it out. If you use water, keep it away from electrical items and hydraulic valves.**

   Clean electrical connectors using compressed air; do not use contact cleaner.
4. Remove and store the cylinder lock and lower the loader arms.

Washing the Machine

If you must pressure wash the machine, do the following:

Important: **Do not clean the machine with water while it is charging. Ensure machine is dry before charging.**

- Wear appropriate personal protective equipment for the pressure washer.
- Keep all guards in place on the machine.
- Avoid spraying at electronic components.
- Avoid spraying at edges of decals.
- Spray the exterior of the machine only. Do not spray directly into openings in the machine.
- Spray only the dirty parts of the machine.
- Use a 40-degree or larger spray nozzle. 40-degree nozzles are usually white.
- Keep the tip of the pressure washer at least 61 cm (2 ft) away from the surface being washed.
- Use only pressure washers with pressure below 13,790 kpa (2,000 psi) and flow below 7.6 L (2 US gallons) per minute.
- Replace damaged or peeling decals.
- Grease all grease points after washing; refer to Greasing the Machine (page 33).

Storage

Storage Safety

- Shut off the machine, remove the key, wait for all moving parts to stop, and allow the machine to cool before storing it.
- Do not store the machine near flames.

Storing the Machine

1. Park the machine on a level surface and lower the loader arms.
2. Shut off the machine and remove the key.
3. Remove dirt and grime from the external parts of the entire machine.

   Important: **Wash the machine using mild detergent and water. Avoid excessive use of water, especially near the control panel, hydraulic pumps, and motors.**
4. Grease the machine.
5. Check and adjust the track tension.
6. Check the hydraulic fluid level.
7. Check and tighten all fasteners. Repair or replace any worn, damaged, or missing parts.
8. Paint all scratched or bare metal surfaces with paint available from your Authorized Service Dealer.
9. Store the machine in a clean, dry garage or storage area. Remove the key from the key switch and keep it in a memorable place.
10. For prolonged storage, follow the battery storage requirements.
11. Cover the machine to protect it and keep it clean.

Battery Storage Requirements

Note: You do not need to remove the batteries from the machine for storage.

Refer to the temperature limits for storage in the following table:

Temperature Limits for Storage

Storage Temperature	Appropriate Storage Time
45° to 55°C (113° to 131°F)	1 week
25° to 45°C (77° to 113°F)	3 weeks
-20° to 25°C (-4° to 77°F)	52 weeks

Important: **Temperatures outside of these ranges can damage your batteries.**

The temperature that the batteries are stored at will affect their long-term life. Storage for long periods of time at extreme temperatures will reduce the battery life. For temperatures above 25°C (77°F), only store the machine for the appropriate amount of time indicated in the table.

- Before you store the machine, charge or discharge the batteries between 40% to 60%.

  Note: A 50% charge is optimal to ensure a maximum battery life. When the batteries are charged to 100% before storage, the battery life shortens.

  If you anticipate that the machine will be stored for a longer period of time, charge the batteries to around 60%.
- For every 6 months of storage, check the battery-charge level and ensure that it is between 40% to 60%. If the charge is below 40%, charge the batteries between 40% to 60%.
- After charging the batteries, disconnect the battery charger from power.
- If you leave the charging cord plugged in, the charger shuts off after the batteries are fully charged and does not turn back on unless the charger is disconnected and reconnected.

Troubleshooting

Machine Troubleshooting

Problem	Possible Cause	Corrective Action
When at rest, the loader arms lower more than 7.6 cm (3 inches) per hour (less than 7.6 cm or 3 inches an hour is normal for the machine).	1. The valve spool is leaking.	1. Contact your Authorized Service Dealer.
When at rest, the loader arms lower 5 cm (2 inches) quickly and then stop.	1. The cylinder seals are leaking.	1. Replace the seals.
The machine does not charge.	1. The temperature is above 55°C (131°F) or below 2°C (35.6°F).	1. Charge the machine in conditions between 2°C (35.6°F) and 55°C (131°F).
The machine does not start immediately after shutting it off.	1. The machine did not power down completely.	1. Allow the machine to completely power down before starting it again.
The machine does not resume operation after idling.	1. The machine is in Power Save Mode.	1. Rapidly move a traction lever twice or shut off and start the machine again.

Battery-Charger Error Codes

The battery-charger error codes display on the machine InfoCenter as shown in Figure 72.

- SPN: Suspect Parameter Number
- FMI: Failure Mode Indicator
- OC: Number of occurrences

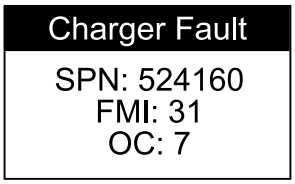

g377956

Figure 72

Problem	Possible Cause	Corrective Action
SPN 4990, FMI 31	1. BMS or battery fault detected	1. Contact an Authorized Service Dealer.
SPN 4992, FMI 4	1. Reverse polarity error	1. The battery is connected to the charger incorrectly. Ensure that the battery connections are secure and attached to the correct polarity.
SPN 4992, FMI 16	1. Battery high voltage	1. Ensure that the battery voltage is correct and the cable connections are secure; ensure that the battery is in good condition.
SPN 4992, FMI 18	1. Battery low voltage	1. Ensure that the battery voltage is correct and the cable connections are secure; ensure that the battery is in good condition.
SPN 4996, FMI 4	1. Charger auxiliary output reverse polarity	1. The battery connections to the charger are reversed. Ensure that the battery connections are secure and attached to the correct polarity.

Problem	Possible Cause	Corrective Action
SPN 8014, FMI 31	1. Cooling fan error	1. The cooling fan has a locked rotor or open circuit. Inspect the fan to ensure that the headers are connected and the fan blades are not obstructed.
SPN 12867, FMI 0	1. High AC voltage error (>270VAC)	1. Connect charger to an AC source that provides stable AC between 85 - 270 VAC / 45-65 Hz.
SPN 12867, FMI1	1. Low AC voltage oscillation error	1. The AC source is unstable. Could be caused by undersized generator or severely undersized input cables. Connect charger to an AC source that provides stable AC between 85 - 270 VAC / 45-65 Hz.
SPN 12935, FMI 31	1. Electric vehicle supply equipment (EVSE) not compatible	1. Unplug the charger from the machine and use a compatible charger.
SPN 520196, FMI 16	1. Battery amp hour limit exceeded	1. Possible causes include poor battery health, very deeply discharged battery, poorly connected battery, and/or high parasitic loads on battery while charging. Possible solutions: Replace batteries. Check DC connections. Disconnect parasitic loads. This error will clear once the charger is reset by cycling DC.
SPN 524032, FMI 31	1. Charger failed to initialize	1. The charger failed to turn on properly. Disconnect the AC input and battery connection for 30 seconds before retrying.
SPN 524033, FMI 31	1. Re-programming failed	1. Software upgrade failure or script operation failure. Ensure that the new software is correct.
SPN 524035,FMI 9	1. Communication error with battery	1. Ensure that the connection of the signal wires to the battery is secure.

Battery-Charger Fault Codes

Problem	Possible Cause	Corrective Action
SPN 524160, FMI 31	1. Internal charger fault	1. Remove the AC connection and battery connection for a minimum of 30 seconds and retry. If it fails again, please contact an Authorized Service Dealer.

Notes:

Notes:

Notes:

California Proposition 65 Warning Information

What is this warning?

You may see a product for sale that has a warning label like the following:



WARNING: Cancer and Reproductive Harm—www.p65Warnings.ca.gov.

What is Prop 65?

Prop 65 applies to any company operating in California, selling products in California, or manufacturing products that may be sold in or brought into California. It mandates that the Governor of California maintain and publish a list of chemicals known to cause cancer, birth defects, and/or other reproductive harm. The list, which is updated annually, includes hundreds of chemicals found in many everyday items. The purpose of Prop 65 is to inform the public about exposure to these chemicals.

Prop 65 does not ban the sale of products containing these chemicals but instead requires warnings on any product, product packaging, or literature with the product. Moreover, a Prop 65 warning does not mean that a product is in violation of any product safety standards or requirements. In fact, the California government has clarified that a Prop 65 warning "is not the same as a regulatory decision that a product is 'safe' or 'unsafe.'" Many of these chemicals have been used in everyday products for years without documented harm. For more information, go to https://oag.ca.gov/prop65/faqs-view-all.

A Prop 65 warning means that a company has either (1) evaluated the exposure and has concluded that it exceeds the "no significant risk level"; or (2) has chosen to provide a warning based on its understanding about the presence of a listed chemical without attempting to evaluate the exposure.

Does this law apply everywhere?

Prop 65 warnings are required under California law only. These warnings are seen throughout California in a wide range of settings, including but not limited to restaurants, grocery stores, hotels, schools, and hospitals, and on a wide variety of products. Additionally, some online and mail order retailers provide Prop 65 warnings on their websites or in catalogs.

How do the California warnings compare to federal limits?

Prop 65 standards are often more stringent than federal and international standards. There are various substances that require a Prop 65 warning at levels that are far lower than federal action limits. For example, the Prop 65 standard for warnings for lead is 0.5 µg/day, which is well below the federal and international standards.

Why don't all similar products carry the warning?

- Products sold in California require Prop 65 labelling while similar products sold elsewhere do not.
- A company involved in a Prop 65 lawsuit reaching a settlement may be required to use Prop 65 warnings for its products, but other companies making similar products may have no such requirement.
- The enforcement of Prop 65 is inconsistent.
- Companies may elect not to provide warnings because they conclude that they are not required to do so under Prop 65; a lack of warnings for a product does not mean that the product is free of listed chemicals at similar levels.

Why does Toro include this warning?

Toro has chosen to provide consumers with as much information as possible so that they can make informed decisions about the products they buy and use. Toro provides warnings in certain cases based on its knowledge of the presence of one or more listed chemicals without evaluating the level of exposure, as not all the listed chemicals provide exposure limit requirements. While the exposure from Toro products may be negligible or well within the "no significant risk" range, out of an abundance of caution, Toro has elected to provide the Prop 65 warnings. Moreover, if Toro does not provide these warnings, it could be sued by the State of California or by private parties seeking to enforce Prop 65 and subject to substantial penalties.