FORM NO. 3312-820

TORO

MODEL NO. 20586-6000001 & UP

PARTS CATALOG

18" H.P. REAR BAGGER

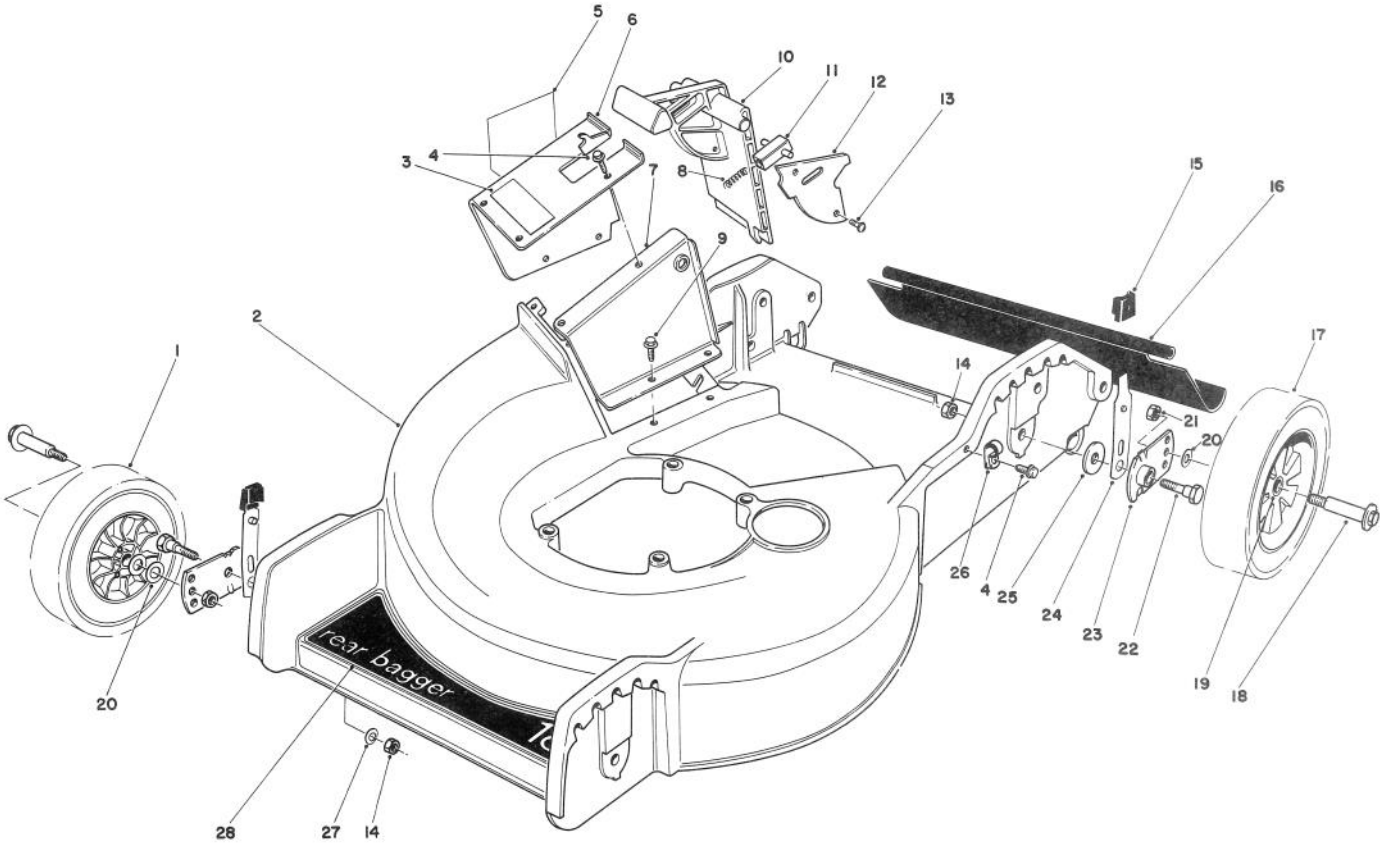

HOUSING ASSEMBLY

Ref. No.	Part No.	Description	No. Used
1	27-6210	Wheel & Tire Assembly (Incl. Ref. #19)	2
2	12-1089	Housing — 18"	1
3	47-6660	Decal — Door	1
4	12-5450	Screw — Thread Forming	2
5	39-5770	Decal — Danger	1
6	11-6839	Tunnel — Outer (Incl. Ref. #3 & 5)	1
7	49-8030	Tunnel — Inner	1
8	33-0450	Spring — Latch	1
9	12-3270	Screw — Thread Forming	6
10	33-0410	Door — Mulching	1
11	47-5550	Latch — Door	1
12	33-0440	Cover — Door	1
13	32144-32	Screw — Thread Forming	2
14	3296-29	Locknut	4

Ref. No.	Part No.	Description	No. Used
15	25-7740	Knob — Arm	4
16	33-2380	Rear Safety Shield	1
17	27-6200	Wheel & Tire Assembly (Incl. Ref. #19)	2
18	27-6230	Wheel Bolt	4
19	27-6250	Bushing	8
20	40-1940	Washer — Wheel Bolt	6
21	52-3620	Locknut	4
22	3-0655	Pivot Screw	4
23	33-0400	Pivot Arm Assembly	4
24	25-8000	Spring Arm Assembly	4
25	33-0390	Pivot Washer	4
26	2412-52	Clamp — Conduit	1
27	3290-456	Washer — Belleville	2
28	46-7920	Decal — Deck	1
*	12-2299	Loose Parts	1

*Not Illustrated

PRICE $1.00

© The Toro Company — 1986

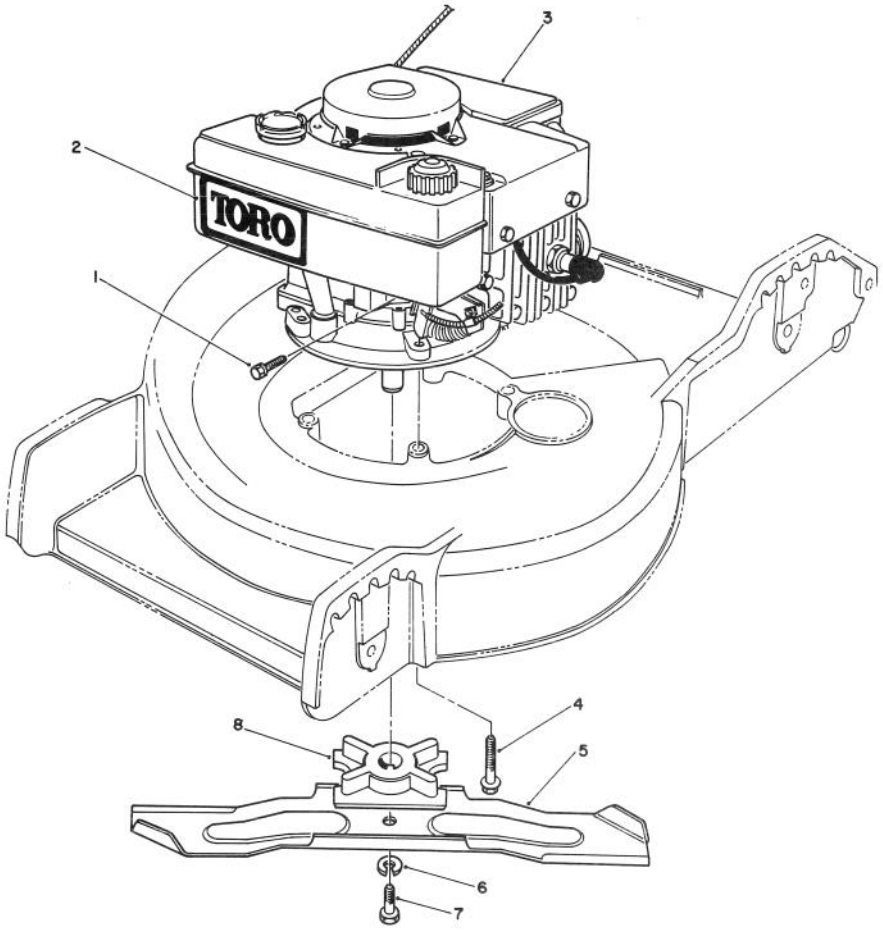

ENGINE ASSEMBLY

Ref. No.	Part No.	Description	No. Used
1	2210-250	Hex. Hd. Screw	1
2	44-0510	Decal — Toro (used on units with serial no. 6000101-6000958)	1
3		Engine	1

Ref. No.	Part No.	Description	No. Used
4	11-0581	Screw — Engine	3
5	33-0490	Blade — 18"	1
6	3253-22	Lockwasher	1
7	26-0671	Screw — Blade	1
8	49-7890	Retainer — Blade	1

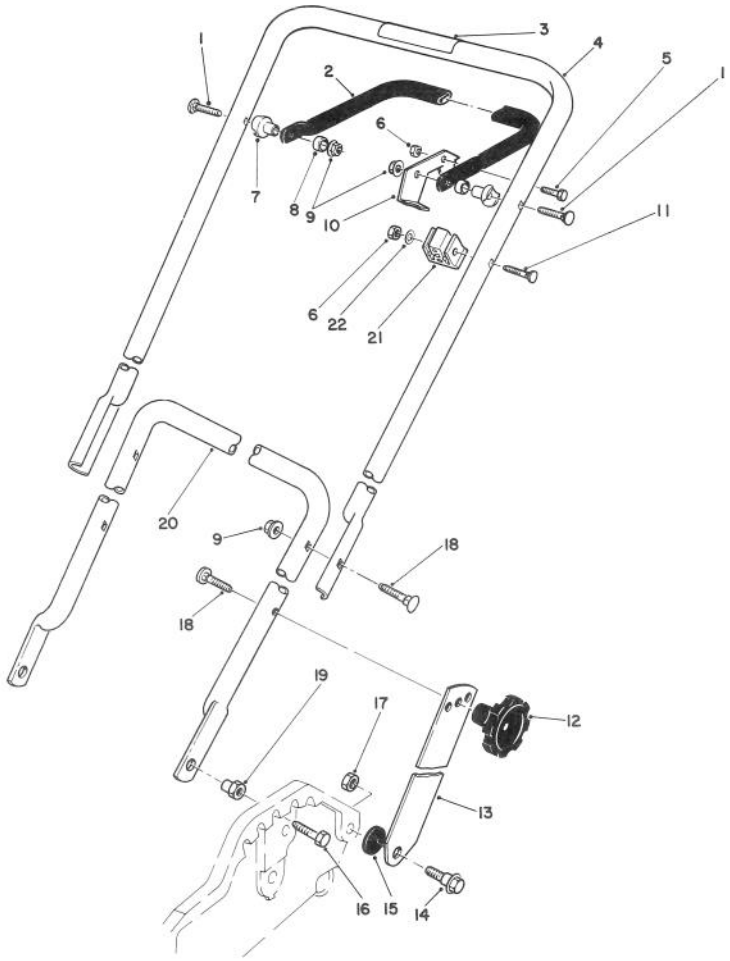

HANDLE ASSEMBLY

Ref. No.	Part No.	Description	No. Used
1	17-9421	Screw — Handle	2
2	49-4221	Bar — Control	1
3	52-7510	Decal — Warning	1
4	49-4232	Handle — Upper	1
5	321-3	Hex. Hd. Capscrew	1
6	3296-42	Locknut	2
7	49-1630	Support — Spacer	2
8	256-276	Bushing — Nylon	2
9	3296-58	Flange Locknut	4
10	46-7950	Lever — Control	1
11	46-6434	Screw — Handle	1

Ref. No.	Part No.	Description	No. Used
12	19-4050	Knob — Handle	2
13	43-1370	Latch — Handle	2
14	27-7210	Screw — Shoulder	2
15	3-3287	Spacer — Handle Latch	2
16	322-5	Hex. Hd. Capscrew	2
17	3296-29	Locknut	2
18	17-9424	Screw — Handle	4
19	12-2080	Nut — Shoulder	2
20	50-9920	Handle — Lower	1
21	46-6980	Support — Cable	1
22	3256-22	Washer	1

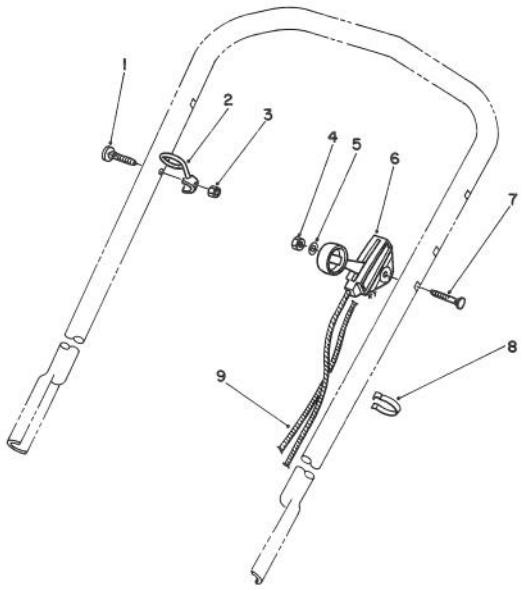

THROTTLE CONTROL ASSEMBLY

Ref. No.	Part No.	Description	No. Used
1	46-6433	Screw — Handle	1
2	46-8080	Guide	1
3	3296-42	Locknut	1
4	3296-56	Locknut	1
5	3256-22	Flat Washer	1

Ref. No.	Part No.	Description	No. Used
6	46-6000	Control — Throttle (Bend #1 (Sheath Lg. 42" Lg.) (Wire Lg. 2⅛" Lg.)	1
7	46-6430	Screw — Handle	1
8	218-465	Clip	2
9	46-8012	Cable — Brake	1

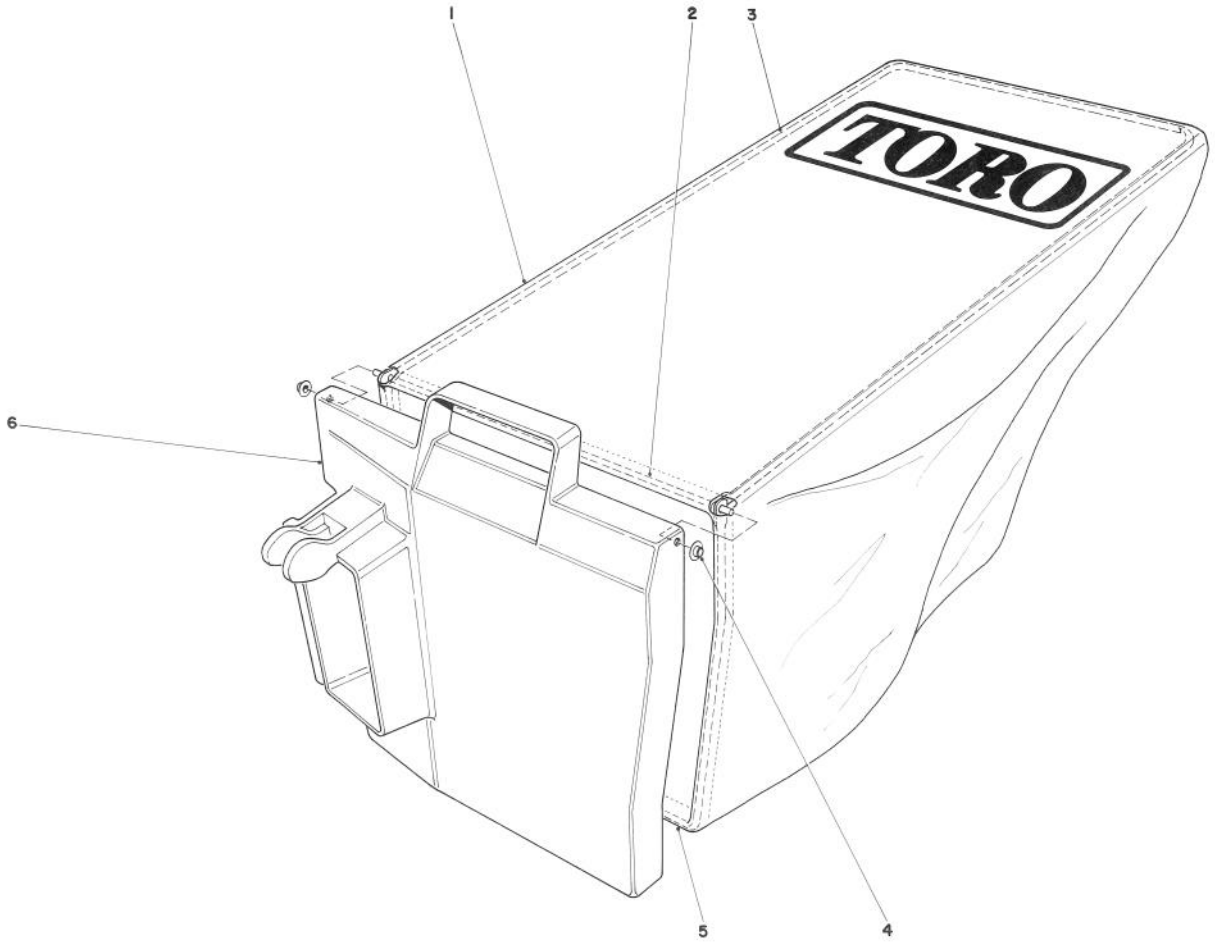

GRASS BAG ASSEMBLY NO. 11-9469

Ref. No.	Part No.	Description	No. Used
1	8-0659	Bag	1
2	50-9670	Hinge	1
3	50-9880	Frame — Bag, Upper	1

Ref. No.	Part No.	Description	No. Used
4	3290-422	Push Nut Washer Cap	2
5	33-2240	Frame Bag	1
6	33-2980	Door — Bag	1

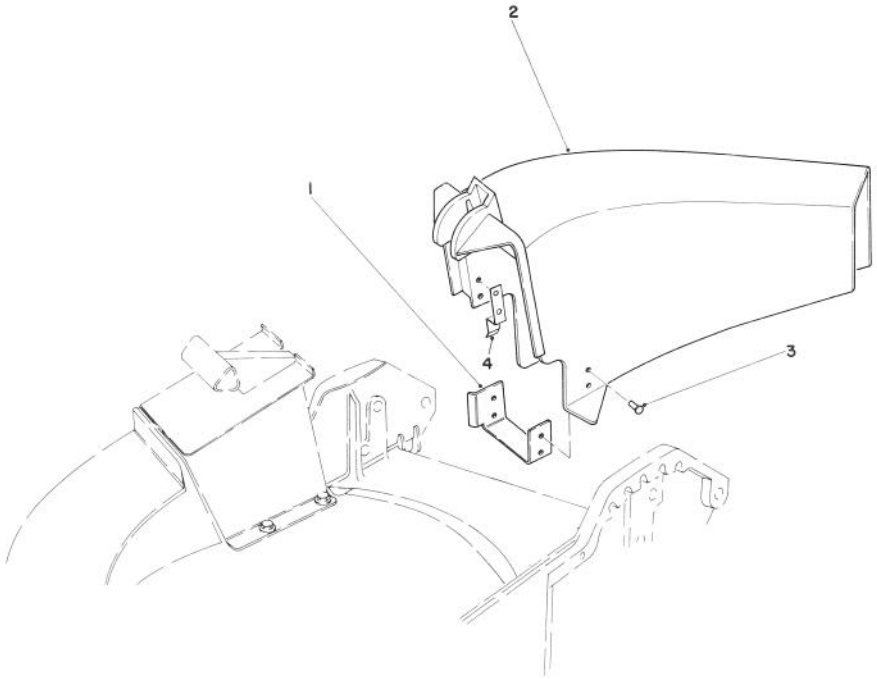

SIDE DISCHARGE KIT NO. 59107 (Optional)

Ref. No.	Part No.	Description	No. Used
1	44-2620	Chute Bracket	1
2	44-2610	Chute Discharge	1

Ref. No.	Part No.	Description	No. Used
3	3295-29	Rivet	6
4	46-6400	Tab Chute	1

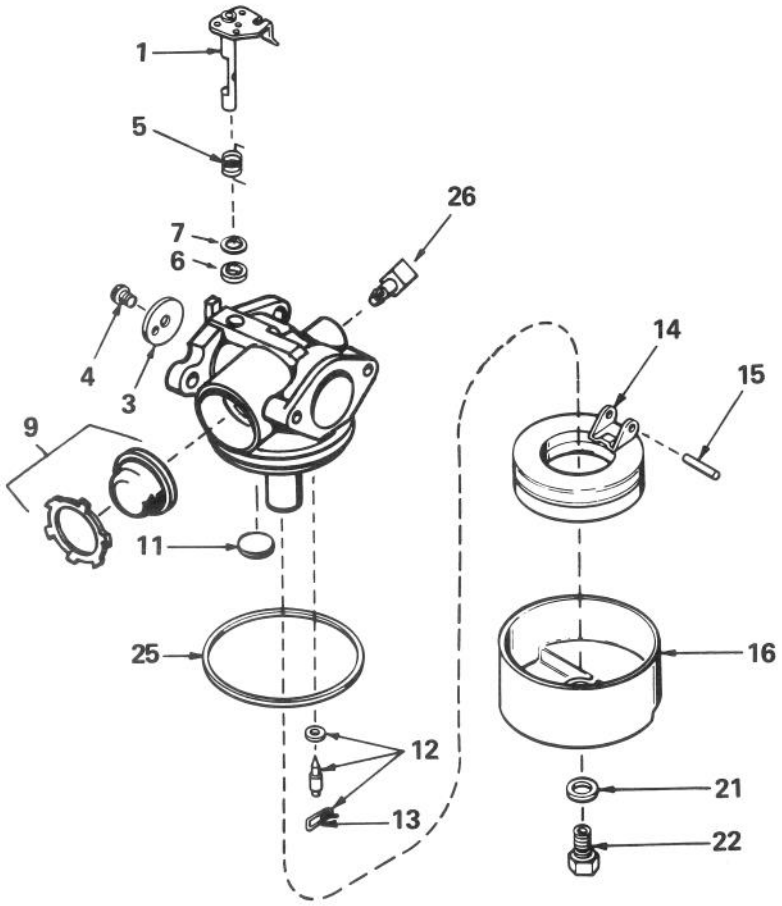

CARBURETOR NO. 632098

Ref. No.	Part No.	Description	No. Used
1	631615	Shaft & Lever Assy. — Throttle	1
3	631616	Shutter — Throttle	1
4	650506	Screw — Throttle Shutter	1
5	631767	Spring — Throttle Return	1
6	631971	Seal — Dust	1
7	631184	Washer — Flat	1
9	632047	Primer Assembly	1
11	631027	Plug — Welch	1
12	631021	Inlet Needle — Seat & Clip Assembly (Incl. Ref. #13)	1

Ref. No.	Part No.	Description	No. Used
13	631022	Clip — Inlet Needle	1
14	632019	Float — Carburetor	1
15	631024	Shaft — Float	1
16	631700	Bowl — Float	1
21	631334	Gasket — Bowl-to-Body	1
22	631937	Nut — Float Bowl	1
25	631028	Gasket — Bowl-to-Body	1
26	631807	Fitting — Fuel Inlet	1

ENGINE TECUMSEH MODEL TVS90-43228D
(used on units with serial no. 6000101-6000958)

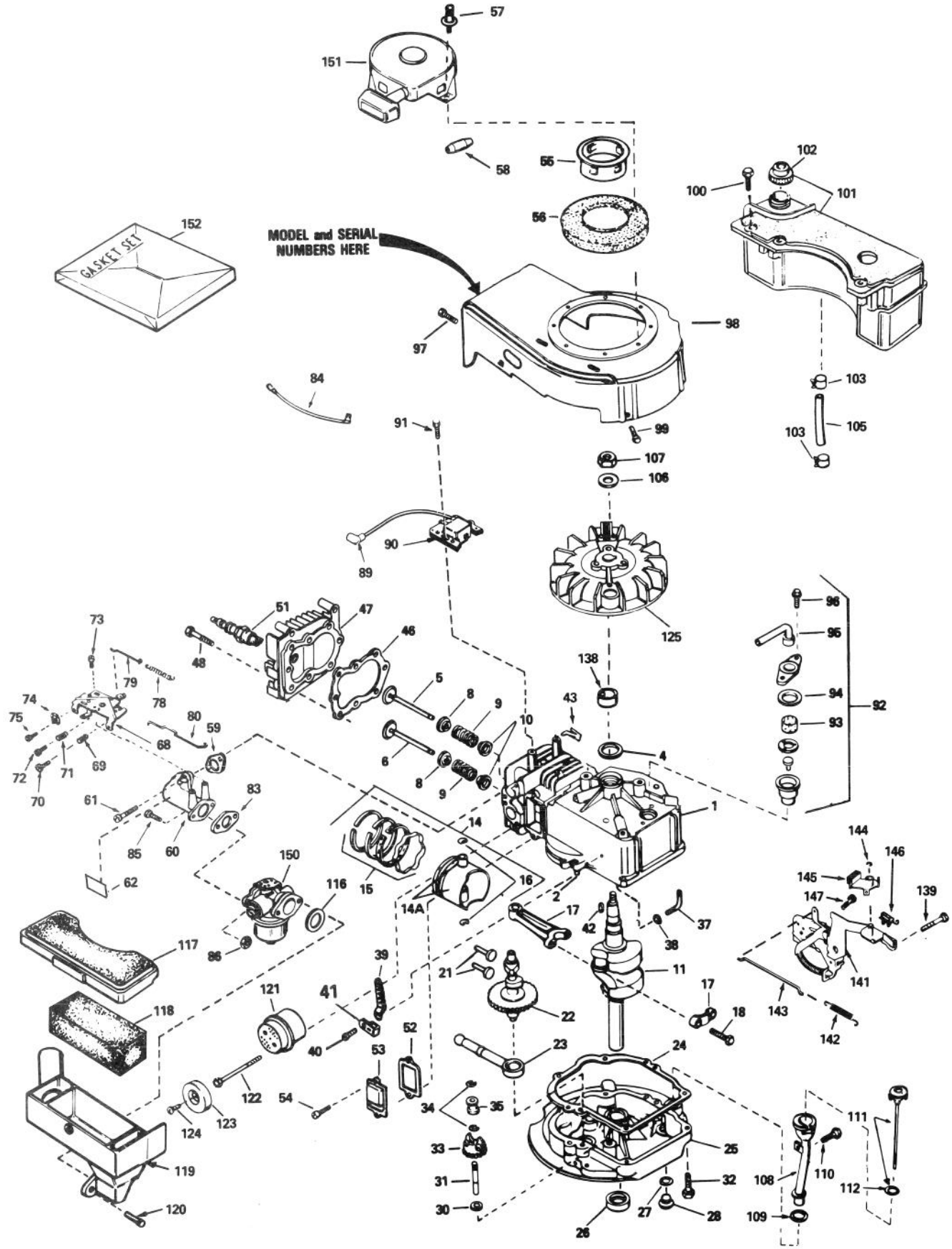

ENGINE TECUMSEH MODEL TVS90-43228D
(used on units with serial no. 6000101-6000958)

Ref. No.	Part No.	Description	No. Used
1	34975	Cylinder Assembly (Incl. Ref. #2 & 4)	1
2	26727	Pin — Dowel	2
4	32600	Seal — Oil	1
5	29314B	Valve — Intake (Std.) (Incl. Ref. #10)	1
5	29315C	Valve — Intake (1/32" oversize) (Incl. Ref. #10)	1
6	29313C	Valve — Exhaust (Std.) (Incl. Ref. #10)	1
6	29315C	Valve — Exhaust (1/32" oversize) (Incl. Ref. #10)	1
8	31671	Cap — Upper Valve Spring	2
9	31672	Spring — Valve	2
10	31673	Cap — Lower Valve Spring	2
11	34440	Crankshaft	1
14	34514	Piston, Pin & Ring Assy. (Std.) (Incl. Ref. #14A, 15 & 16)	1
14	34515	Piston, Pin & Ring Assy. (.010 oversize) (Incl. Ref. #14A, 15 & 16)	1
14	34516	Piston, Pin & Ring Assy. (.020 oversize) (Incl. Ref. #14A, 15 & 16)	1
14A	32538B	Piston & Pin Assy. (Std.) (Incl. Ref. #16)	1
14A	32548B	Piston & Pin Assy. (.010 oversize) (Incl. Ref. #16)	1
14A	32549B	Piston & Pin Assy. (.020 oversize) (Incl. Ref. #16)	1
15	28986	Ring Set — Piston (Std.)	1
15	28987	Ring Set — Piston (.010 oversize)	1
15	28988	Ring Set — Piston (.020 oversize)	1
16	20381	Ring — Piston Pin Retaining	2
17	30963B	Rod Assembly — Connecting (Incl. Ref. #18)	1
18	32610A	Screw — Connecting Rod	2
21	27241	Lifter — Valve	2
22	33553	Camshaft (Mechanical Compression Release)	1
23	29914	Pump Assembly — Oil	1
24	26750A*	Gasket — Mounting Flange	1
25	34831	Flange Assembly — Mounting (Incl. Ref. #26, 27, 28 & 31)	1
26	26208	Seal — Oil	1
27	28833*	Gasket — Oil Drain Plug	1
28	27244	Plug — Oil Drain	1
30	30590A	Washer — Flat	1
31	30574	Shaft — Mechanical Governor	1
32	650488	Screw — Hex. Hd.	6
33	30591	Gear Assembly — Governor (Incl. Ref. #30)	1
34	29193	Ring — Retaining	2
35	30588A	Spool — Governor	1
37	30589	Rod — Governor (Incl. Ref. #38)	1
38	28277	Washer — Flat	1
39	31383A	Lever — Governor	1
40	650548	Screw — Hex. Washer Hd.	1
41	31335	Clamp — Governor Lever	1
42	611004	Key — Flywheel (Solid State)	1
43	29443	Clip — Spring	1
46	29953B*	Gasket — Cylinder Head	1
47	34335	Head — Cylinder	1
48	6021A	Screw — Hex. Flange Hd.	8
51	35078	Plug — Spark (Autolite 458, Champion J-19LM or equivalent)	1
52	27234*	Gasket — Breather	1
53	32755	Cover — Valve Spring	1
54	650128	Screw — Fil. Hd.	2
55	34449	Hub — Starter	1
56	35009	Screen — Starter	1
57		Pop Rivet (Can be purchased locally)	4
58	34985	Rope Stop & Staple Assembly	1
59	34690*	Gasket — Intake	1
60	31384A	Pipe — Intake (Incl. Ref. #59)	1
61	650451	Screw — Hex. Hd.	2
62	34144	Decal — Primer	1
68	33131A	Control Assembly — Remote Speed (Incl. Ref. #69 thru 72)	1
69	33802	Spring — Compression	1
70	650777	Screw — Fil. Hd.	1
71	31342	Spring — Compression	1
72	650549	Screw — Fil. Hd.	1
73	30200	Screw — Hex. Washer Hd. Self-Tap	2
74	27793	Clip — Conduit	1
75	28942	Screw — Hex. Washer Hd.	1
78	31361	Spring — Governor	1
79	34337	Link — Governor Spring	1
80	34336	Link — Governor-to-Throttle	1
83	26756*	Gasket — Carburetor	1
84	34961	Wire — Ground	1
85	6201	Screw — Hex. Hd.	2
86	29752	Nut & Lockwasher	2
89	610118	Cover — Spark Plug	1
90	34443A	Lamination & Coil Assembly (Solid State) (Incl. Ref. #89)	1
91	650814	Screw — Hex. Hd.	2
92	34214A	Breather Assembly (Incl. Ref. #93 thru 96)	1
93	33734	Element — Breather	1
94	33735	Gasket — Breather	1
95	33886	Tube — Breather	1

*Indicates parts included in Gasket Set, Ref. #152.

ENGINE TECUMSEH MODEL TVS90-43228D (Continued)
(used on units with serial no. 6000101-6000958)

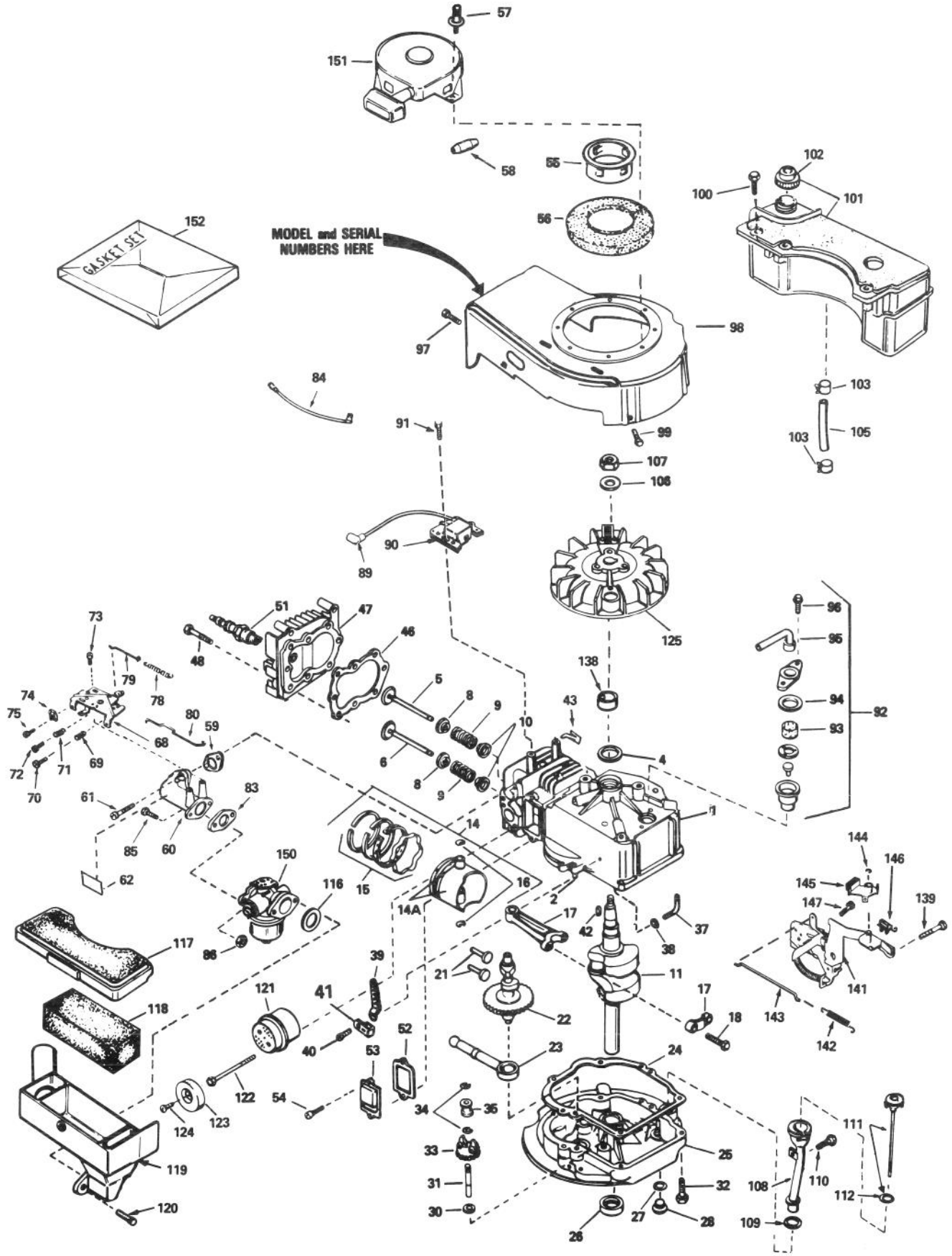

ENGINE TECUMSEH MODEL TVS90-43228D (Continued)
(used on units with serial no. 6000101-6000958)

Ref. No.	Part No.	Description	No. Used
96	30200	Screw — Hex. Washer Hd. Self-Tap	2
97	30200	Screw — Hex. Washer Hd. Self-Tap	2
98	34936	Housing — Blower	1
99	650831	Screw — Hex. Washer Hd. Powerlok Thread	2
100	28763	Screw — Hex. Washer Hd. Shakeproof	3
101	34476	Tank Assembly — Fuel (Incl. Ref. #102)	1
102	33032	Cap — Fuel Tank	1
103	26460	Clamp — Fuel Line	2
105	34682	Line — Fuel	1
106	650815	Washer — Belleville	1
107	650816	Nut — Flywheel	1
108	34264	Tube — Oil Fill	1
109	34265	Gasket — Oil Fill Tube	1
110	650562	Screw — Hex. Washer Hd.	1
111	34281	Dipstick — Oil (Incl. Ref. #112)	1
112	33590	"O" Ring	1
116	34338*	Gasket — Air Cleaner	1
117	34341	Cover — Air Cleaner	1
118	34340	Element — Air Cleaner	1
119	34858	Body — Air Cleaner	1
120	650806	Screw — Hex. Washer Hd. Shoulder	2
121	27181B	Muffler (Incl. Ref. #122)	1
122	650795	Screw — Hex. Hd.	2
123	32431	Cover — Muffler	1
124	650643	Screw — Pan Hd. Self-Tap	1
125	611046	Flywheel	1
138	34080	Spacer — Flywheel Key	1
139	650839	Screw — Hex. Hd. Self-Tap	2
141	35015	Bracket Assembly	1
142	34965	Spring — Extension	1
143	34966	Link — Control	1
144	32309	Ring — Retaining	1
145	34968	Lever — Brake	1
146	610973	Terminal Assembly	1
147	650837	Screw — Hex. Hd. E.T.	1
150	632098	Carburetor (Incl. Ref. #83)	1
151	590420A	Starter — Rewind	1
152	33238C	Gasket Set	1

*Indicates parts included in Gasket Set, Ref. #152.

ENGINE TECUMSEH MODEL TVS100-44002
(used on units with serial no. 6000959 & UP)

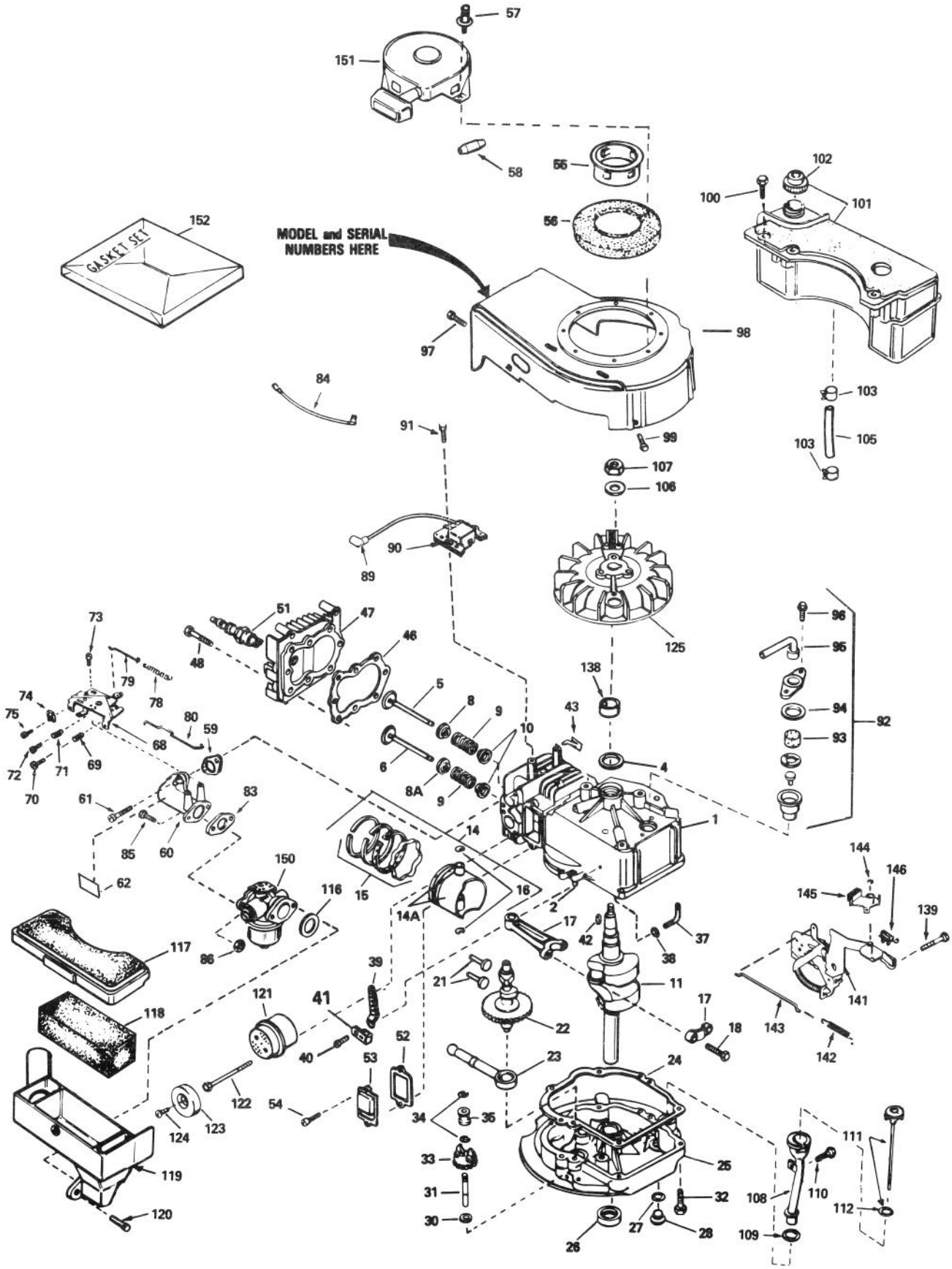

ENGINE TECUMSEH MODEL TVS100-44002
(used on units with serial no. 6000959 & up)

Ref. No.	Part No.	Description	No. Used
1	35010	Cylinder Assembly (Incl. Ref. #2 & 4)	1
2	26727	Pin — Dowel	2
4	32600	Seal — Oil	1
5	29314B	Valve — Intake (Std.) (Incl. Ref. #10)	1
5	29315C	Valve — Intake (1/32" oversize) (Incl. Ref. #10)	1
6	29313C	Valve — Exhaust (Std.) (Incl. Ref. #10)	1
6	29315C	Valve — Exhaust (1/32" oversize) (Incl. Ref. #10)	1
8	35390	Seal Assembly — Intake Valve	1
8A	31671	Cap — Upper Valve Spring (Exhaust)	1
9	31672	Spring — Valve	2
10	31673	Cap — Lower Valve Spring	2
11	34440	Crankshaft	1
14	34851	Piston — Pin & Ring Assy. (Std.) (Incl. Ref. #14A, 15 & 16)	1
14	34852	Piston — Pin & Ring Assembly (.010 oversize) (Incl. Ref. #14A, 15 & 16)	1
14	34853	Piston — Pin & Ring Assembly (.020 oversize) (Incl. Ref. #14A, 15 & 16)	1
14A	32603B	Piston & Pin Assembly (Std.) (Incl. Ref. #16)	1
14A	32604B	Piston & Pin Assembly (.010 oversize) (Incl. Ref. #16)	1
14A	32605B	Piston & Pin Assembly (.020 oversize) (Incl. Ref. #16)	1
15	34854	Ring Set — Piston (Std.)	1
15	34855	Ring Set — Piston (.010 oversize)	1
15	34856	Ring Set — Piston (.020 oversize)	1
16	20381	Ring — Piston Pin Retaining	2
17	30963B	Rod Assembly — Connecting (Incl. Ref. #18)	1
18	32610A	Screw — Connecting Rod	2
21	27241	Lifter — Valve	2
22	33553	Camshaft (Mechanical Compression Release)	1
23	29914	Pump Assembly — Oil	1
24*	35261	Gasket — Mounting Flange	1
25	34831	Flange Assembly — Mounting (Incl. Ref. #26, 27, 28 & 31)	1
26	26208	Seal — Oil	1
27*	28833	Gasket — Oil Drain Plug	1
28	27244	Plug — Oil Drain	1
30	30590A	Washer — Flat	1
31	30574	Shaft — Mechanical Governor	1
32	650488	Screw — Hex Hd.	6

Ref. No.	Part No.	Description	No. Used
33	30591	Gear Assembly — Governor (Incl. Ref. #30)	1
34	29193	Ring — Retaining	2
35	30588A	Spool — Governor	1
37	30589	Rod — Governor (Incl. Ref. #38)	1
38	28277	Washer — Flat	1
39	31383A	Lever — Governor	1
40	650548	Screw — Hex Washer Hd.	1
41	31335	Clamp — Governor Lever	1
42	611004	Key — Flywheel (Solid State)	1
43	29443	Clip — Spring	1
46*	33015	Gasket — Cylinder Head	1
47	34342	Head — Cylinder	1
48	6021A	Screw — Hex Flange Hd.	8
51	35078	Plug — Spark (Autolite 458, Champion J-19LM or equivalent)	1
52*	27234	Gasket — Breather	1
53	32755	Cover — Valve Spring	1
54	650128	Screw — Fil. Hd.	2
55	34449	Hub — Starter	1
56	35009	Screen — Starter	1
57		Pop Rivet (Can be purchased locally)	1
58	34985	Rope Stop & Staple Assembly	1
59*	34690	Gasket — Intake Pipe	1
60	31384A	Pipe — Intake (Incl. Ref. #59)	1
61	650451	Screw — Hex Hd.	2
62	34144	Decal — Primer	1
68	33131A	Control Assy. — Remote Speed (Incl. Ref. #69 thru 72)	1
69	33802	Spring — Compression	1
70	650777	Screw — Fil. Hd.	1
71	31342	Spring — Compression	1
72	650549	Screw — Fil. Hd.	1
73	30200	Screw — Hex Washer Hd. Self-Tap	2
74	27793	Clip — Conduit	1
75	28942	Screw — Hex Washer Hd.	1
78	31361	Spring — Governor	1
79	34337	Link — Governor Spring	1
80	34336	Link — Governor-to-Throttle	1
83*	26756	Gasket — Carburetor	1
84	34961	Wire — Ground	1
85	6201	Screw — Hex Hd.	2
86	29752	Nut & Lockwasher	2
89	610118	Cover — Spark Plug	1
90	34443A	Solid State Assembly	1
91	650814	Screw — Hex Hd.	2
92	34214A	Breather Assembly (Incl. Ref. #93 thru 96)	1
93	33734	Element — Breather	1
94*	33735	Gasket — Breather	1
95	33886	Tube — Breather	1

*Indicates parts included in Gasket Set, Ref. No. 152.

ENGINE TECUMSEH MODEL TVS100-44002 (Continued)
(used on units with serial no. 6000959 & up)

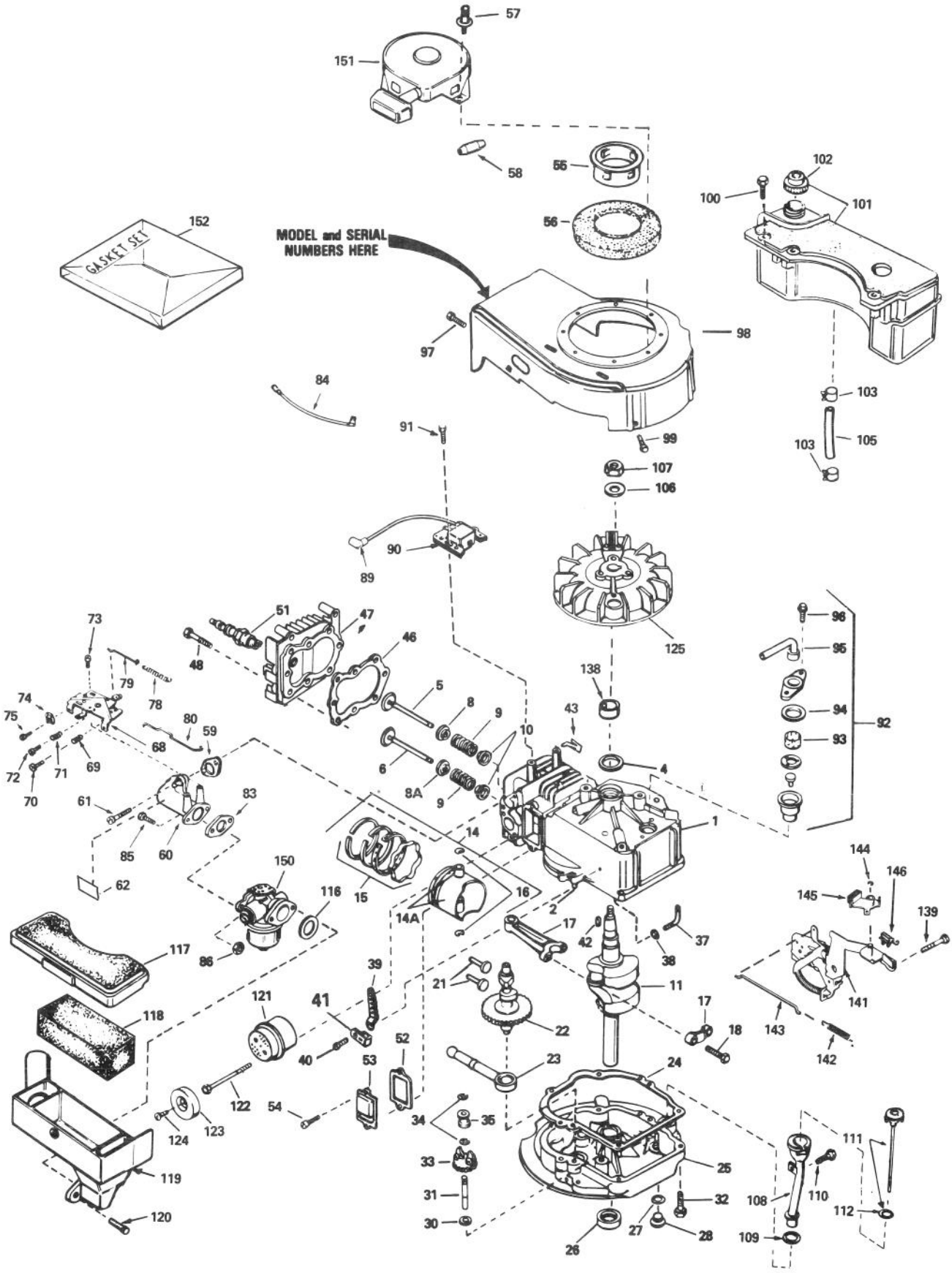

ENGINE TECUMSEH MODEL TVS100-44002 (Continued)
(used on units with serial no. 6000959 & up)

Ref. No.	Part No.	Description	No. Used
96	30200	Screw — Hex Washer Hd. Self-Tap	2
97	30200	Screw — Hex Washer Hd. Self-Tap	2
98	34936	Housing — Blower	1
99	650831	Screw — Hex Washer Hd. Power Lok Thread	2
100	28763	Screw — Hex Washer Hd.	3
101	34476	Tank Assembly — Fuel (Incl. Ref. #102)	1
102	33032	Cap — Fuel Tank	1
103	26460	Clamp — Fuel Line	2
105	30705	Line — Fuel	1
106	650815	Washer — Belleville	1
107	650816	Nut — Flywheel	1
108	34264	Tube — Oil Fill	1
109	34265	Gasket — Oil Fill Tube	1
110	650562	Screw — Hex Washer Hd.	1
111	34281	Dipstick — Oil (Incl. Ref. #112)	1
112	33590	"O" Ring	1
116*	34338	Gasket — Air Cleaner	1
117	34341	Cover — Air Cleaner	1
118	34340	Element — Air Cleaner	1
119	34858	Body — Air Cleaner	1
120	650806	Screw — Hex Washer Hd. Shoulder	2
121	27181B	Muffler (Incl. Ref. #122)	1
122	650795	Screw — Hex Hd.	2
123	32431	Cover — Muffler	1
124	650643	Screw — Pan Hd. Self-Tap	1
125	611046A	Flywheel	1
138	34080	Spacer — Flywheel Key	1
139	650839	Screw — Hex Hd. Self-Tap	2
141	35015	Bracket Assembly — Brake	1
142	34965	Spring — Extension	1
143	34966	Link — Control	1
144	32309	Ring — Retaining	1
145	34968	Lever — Brake	1
146	610973	Terminal Assembly	1
150	632098	Carburetor (Incl. Ref. #83)	1
151	590420A	Starter — Rewind	1
152	33238C	Gasket Set (Incl. Items Marked *)	1

*Indicates parts included in Gasket Set, Ref. No. 152

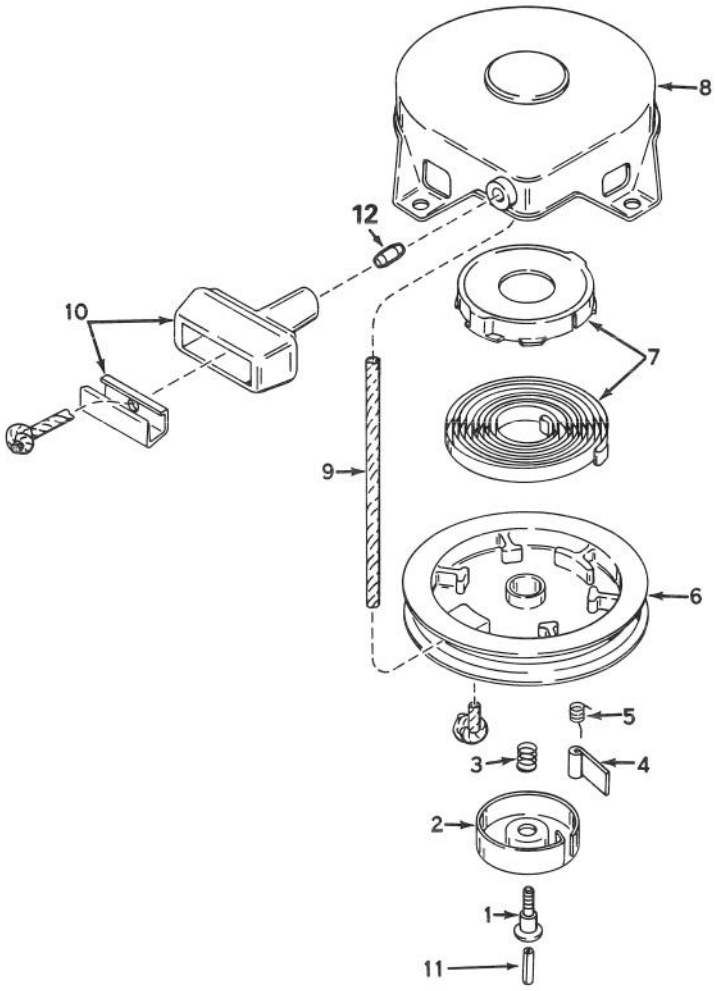

REWIND STARTER NO. 590420A

Ref. No.	Part No.	Description	No. Used
1	590409A	Screw — Retainer	1
2	590410	Retainer — R.H.	1
3	590411	Spring — Brake	1
4	590148	Dog — Starter	1
5	590412	Spring — R.H. Dog	1
6	590413A	Pulley	1
7	590414	Spring & Keeper Assembly	1

Ref. No.	Part No.	Description	No. Used
8	590536	Housing Assembly — Starter (Incl. Ref. #1)	1
9	590535	Rope — Starter	1
10	590387	Handle Assembly — Starter	1
11	590459	Pin — Centering	1
12	34985	Stop & Staple — Rope (Not used on all models)	1