Charge Station

Turf Pro™ Series Robotic Mowers and Range Pro Series Ball Pickers

Model No. 30913EU

Model No. 30914EU

Installation Instructions

Electromagnetic Compatibility Certification

South Korea

R-R-Tor-CHEU

Introduction

⚠ WARNING ⚠

Failing to follow the operating instructions or to receive training from an authorized Toro distributor may result in death or serious injury.

- **To maximize the safety, performance, and proper operating of this machine, carefully read and fully understand the content of this *Operator's Manual*.**
- **For more information on safe operating practices, including safety tips and training materials, go to www.Toro.com.**

This manual covers the installation and maintenance of the charging station for the Turf Pro series robotic mowers and Range Pro series ball pickers.

Note: Information about the peripheral wires and loop wires is located in the *Operator's Manual* for each mower.

This charging station is intended to be used by professional, hired operators for autonomous, programmable lawn care. It is designed for charging the batteries on the Turf Pro and Range Pro autonomous robots. Using the autonomous robots, battery, charging station, and base station for purposes other than their intended use could endanger you and bystanders.

© 2026—The Toro® Company
8111 Lyndale Ave So
Bloomington, MN 55044

Register at
www.Toro.com
Original Instructions (EN)
Printed in the USA
All rights reserved

3471-509

Read this information carefully to learn how to operate and maintain your product properly and to avoid injury and product damage. You are responsible for operating the product properly and safely.

Getting Help

Visit www.Toro.com for product safety and operation training materials, accessory information, help finding a dealer, or to register your product.

Whenever you need service, genuine Toro parts, or additional information, contact an Authorized Service Dealer or Toro Customer Service and have the model and serial numbers of your product ready. These numbers are located on the serial plate on your product. Write the numbers in the space provided.

IMPORTANT

With your mobile device, you can scan the QR code on the serial number decal (if equipped) to access warranty, parts, and other product information.

Model Number:		**Serial Number:**	

Manual Conventions

This manual identifies potential hazards and has safety messages identified by the safety-alert symbol, which signals a hazard that may cause serious injury or death if you do not follow the recommended precautions.



G405934

This manual uses 2 words to highlight information. **Important** calls attention to special mechanical information and **Note** emphasizes general information worthy of special attention.

Safety Alert Classifications

The safety-alert symbol shown in this manual and on the machine identifies important safety messages that you must follow to prevent accidents.

Safety-alert symbol appears above information that alerts you to unsafe actions or situations and is followed by the word **DANGER**, **WARNING**, or **CAUTION**.

DANGER

Danger indicates an imminently hazardous situation which, if not avoided, *will* result in death or serious injury.

Safety Alert Classifications (continued)

⚠ WARNING ⚠

Warning indicates a potentially hazardous situation which, if not avoided, *could* result in death or serious injury.

⚠ CAUTION ⚠

Caution indicates a potentially hazardous situation which, if not avoided, *may* result in minor or moderate injury.

Safety

IMPORTANT SAFETY INSTRUCTIONS

1. SAVE THESE INSTRUCTIONS—This manual contains important safety and operating instructions for the Turf Pro and Range Pro battery charger.
2. Before using the battery charger, read all the instructions and cautionary markings on the battery charger, battery, and product using the battery pack.
3. CAUTION—To reduce risk of injury, charge the Turf Pro and Range Pro batteries with the Turf Pro and Range Pro charging station only. Other brands of battery packs may burst, causing personal injury and damage.

General Safety

- Read, understand, and follow all of these instructions and warnings before using the machine.

Operation Safety

- Do not place any object on the charging station.
- Do not modify the charging station.
- Do not use or operate a damaged or improperly functioning charging station.
- Do not plug the charging station into a power strip or an extension cord.
- Do not operate a charging station that has received a sharp or heavy blow.
- Do not use a charging station other than that designed for the mower; refer to the *Operator's Manual* for proper charging instructions.
- Do not connect a damaged power supply cord. Do not touch a live damaged cord.
- Wipe the charging terminals on the charging station and mower using a clean, dry cloth if they are dirty.
- Do not stand or sit on the charging station or allow others to do so.

- Keep bystanders and children away from the charging station during operation.
- When the robotic mower or ball picker needs to be charged, it automatically travels to the charging station and starts charging. When the required amount of charge is completed, charging is terminated. For more information, refer to the robot mower or ball picker *Operator's Manual*.
- This product is intended for charging batteries (type: lithium-ion iron phosphate battery, cell number: 3.2 V x 8, voltage: 25.6 V, capacity: 19.0 Ah/486.4 Wh) in robot mowers and ball pickers. Do not use to charge other batteries.
- This charging station is not intended for use by persons (including children) with reduced physical, sensory or mental capabilities, or lack of experience and knowledge, unless they have been given supervision or instruction concerning use of the charging station by a person responsible for their safety.
- Do not let children play with the charging station.

Maintenance Safety

- Disconnect the charging station before performing maintenance on or cleaning it to reduce the risk of electric shock.
- Do not attempt to repair, open, or disassemble the charging station unless you are authorized to do so.
- Take the charging station to an Authorized Service Dealer for service repair. Do not disassemble the charging station.
- Cleaning and maintenance shall only be performed by trained professionals.

Safety and Instructional Decals

Safety decals and instructions are easily visible to the operator and are located near any area of potential danger. Replace any decal that is damaged or missing.

Decal Part: 163-3997

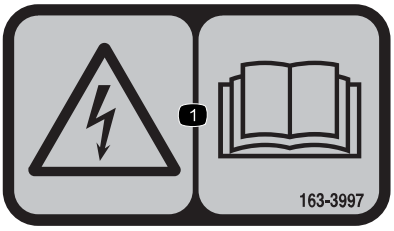

s_decal163-3997

(1) Electric shock hazard—read the *Operator's Manual*.

Decal Part: 164-5948

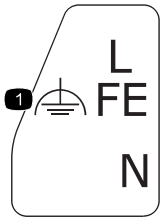

s_decal164-5948

(1) Ground

Product Overview

Charging Station Components

Note: Model 30914EU is shown

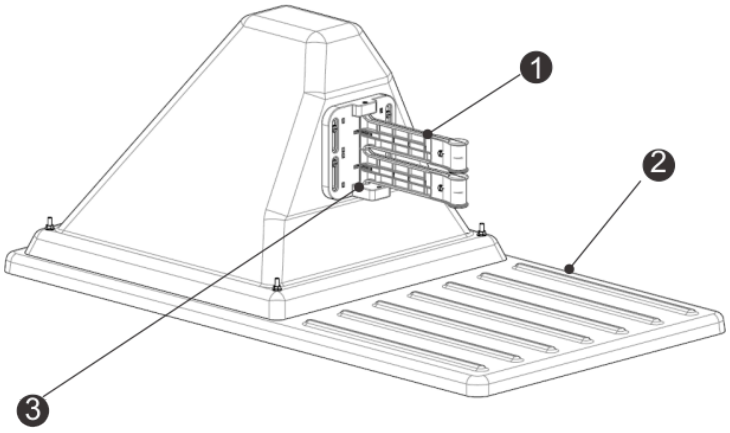

G520730

1. Charge arms
2. Base
3. Occupation sensor

Rear View of the Charging Station

Note: Model 30914EU is shown

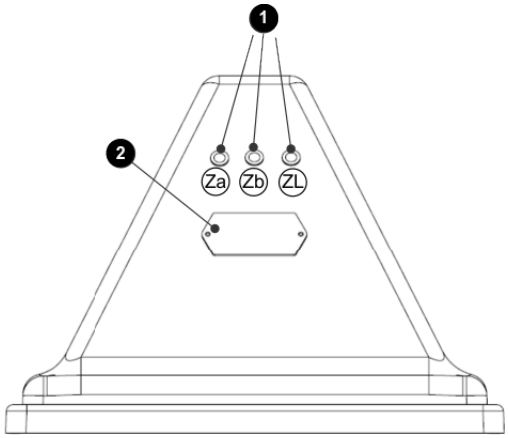

G526516

1. LED indicators
2. Identification label

Bottom View of the Charging Station

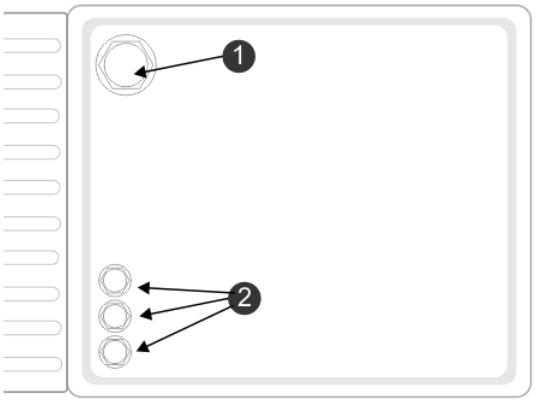

G520732

1. Power-cable input
2. Peripheral-cable input

Occupation Sensor

The occupation sensor is an optional feature indicating that the charging station is occupied in charging a robot. This particularily important when using multiple ball-collecting robots.

LED Indicators

The LED indicators show the current state of each wire. Refer to the following table.

Green - blinking	The wire is operating normally.
Red - blinking	No peripheral wire can be detected. The wire may have been cut or is too long.
Red - steady	This indicates a problem. The wire may be too short (less than 200 m or 656 ft) or a problem with the electronics.

The LEDs are labelled as follows:

- ZL: The wire for the station loop zone
- Za: The wire for the working zone A
- Zb: The wire for the working zone B

Note: If you are using a charging station with multiple loops and you are not using one of the loops, the LED will blink red. To stop the LED from blinking red, turn the channel on the board to 9.

Stations

One station is required for each robot to charge.

The maximum number of boards in a station (and therefore wires that can be connected) is 3. If more wires need to be connected (if 2 loops and 2 peripheral wires are required), install an extra channel board.

Mono-Zone Station (Loop Wire Only)

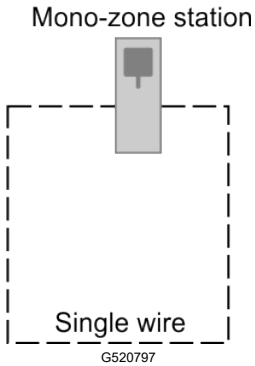

A single board is installed in this type of station, supporting just a single wire. This type of station would typically be used in a golf installation, where the single wire would be the loop wire. This board and wire is labelled ZL on the station.

Bi-Zone and Loop Station

For golf course installation:

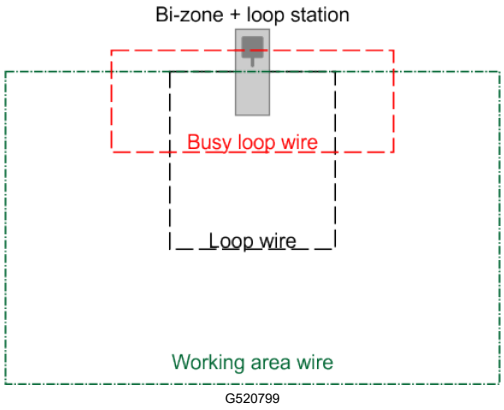

These 3 wires could be used for:

- A loop wire to allow the robot to return to this station.
- A peripheral wire defining the area in which the robot will work.
- A busy loop used when 2 ball-collecting robots are in operation.

For mower installation:

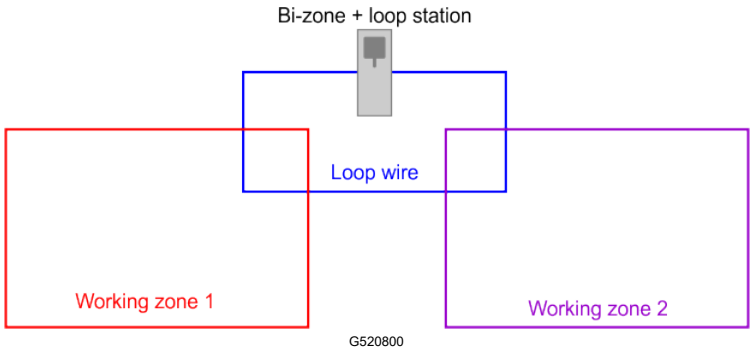

3 boards will be installed in this type of station. These boards and wires are labelled ZL (for the loop) and Za and Zb (for the working zones).

This station can be used for:

- A loop wire to allow the robot to return to this station.
- 2 peripheral wires for separate working areas.

Electronic Board

The charging station contains a board for each wire (channel) required. A maximum of 3 boards can be installed.

Note: If necessary, install a signal channel board in an external box.

Electronic Board Components

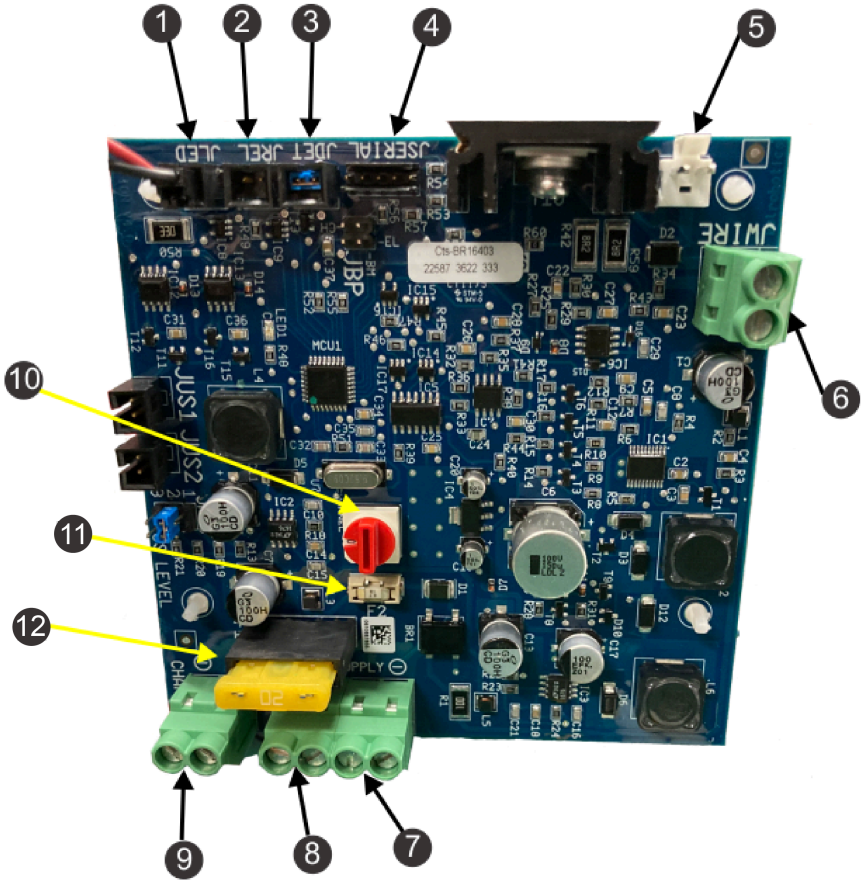

G520838

1. Pilot LED (JLED)
2. Optional relay connection (JREL)
3. Optional presence detection (JDET)
4. PC interface for updates (JSERIAL)
5. JWire connection for surge protection
6. Peripheral wire (JWIRE)
7. Negative DC supply (JTR1)
8. Positive DC supply (JTR2)
9. 32 V contact arm (JCHRG)
10. Magnetic signal channel selection switch
11. 20 A fuse (main)
12. 1 A fuse (electronic board)

Specifications

Note: Specifications and design are subject to change without notice.

Width	45 cm (17.7 inches)
Length	85 cm (33.5 inches)
Height	34.5 cm (13.6 inches)
Operating temperature	0°C to 50°C (32°F to 122°F) temperature protections has been implemented for higher temperatures
Ingress protection	IP54
Power input	100-240 VAC 3.5 A 50-60 HZ
Charge output	23-32 VDC 10.7 A
Output circuits	Class II
Perimeter loop supported frequencies	1.71/2.02/2.47/2.71/3.17/4.44 kHz

Installation

Note: If installing in South Korea, attach the distributor service contact information decal to the outside of the charging station below the serial decal.

Charging Station Installation Requirements

This is a basic installation procedure. Each installation varies by application. Contact an Authorized Service Dealer if you have specific questions.

One station is required for each robot.

If installing a charger for a Range Pro, refer to Adapting the Drop Pit Station, page 23.

If installing on concrete, refer to Mounting the Charging Station on Concrete, page 19.

IMPORTANT

The installation is required to be performed by a qualified professional.

Follow all of the national and regional codes.

IMPORTANT

Do no bend, warp or crack the base during the installation process.

- Develop an installation plan and a map of the site. If the installation is for ball picker, make sure to determine the area needed for the ball drop.

- Identify a location for installing the AC power supply, station loop peripheral wire(s), and field zone peripheral wire(s).
- There should be no risk of flooding after heavy rain.
- Obstacles must be more than 6 m (19.7 ft) away from the charging station. For more details concerning water obstacles, refer the following section that details positioning the station near water.
- When GPS navigation is being used, the station should be positioned in the following ways to optimize the GPS precision:
  - to the south of the site, if the site is in the northern hemisphere
  - to the north of the site, if the site is in the southern hemisphere
- The charging station must lie within the range of the 4G RTK base or Wi-Fi repeater and receive a good signal level. A signal level of 1.2 is required for the robot to be able to leave the station and signal level of 2.0 is required for 4G RTK.
- Install the charging station on flat ground where flooding or water accumulation will not occur.

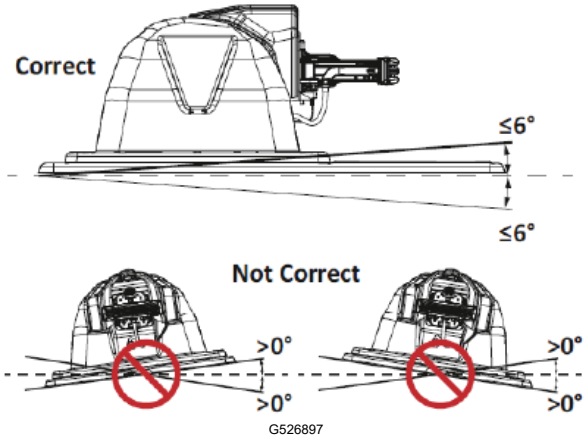

Note: If the entire field is on a slope, install the charging station on a flat portion at the top. The robot has no brake when it is in charge mode and can slide away from the charging arm contacts if the longitudinal slope is greater than 0°.

Positioning the Charging Station Near Water

IMPORTANT

The charging station must be located at least 15 m (49 ft) from the water's edge.

The figure below summarizes critical factors associated with the placement of the charging station near a water feature.

Positioning the Charging Station Near Water (continued)

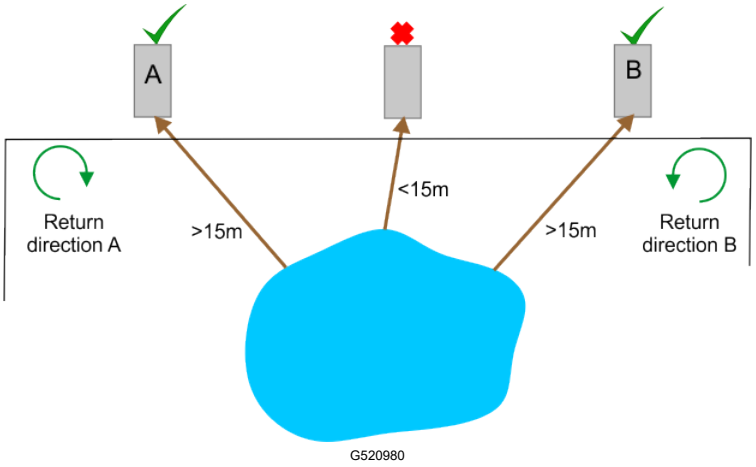

In the situation illustrated above, two possible locations for a charging station have been shown. The robot should return to the station from the direction away from the water. So if the charging station is located in point A, the robot must return to it in a clockwise direction. If the charging station is located in point B, the robot must return to it from a counter-clockwise direction.

Charging Station and Wire Distance

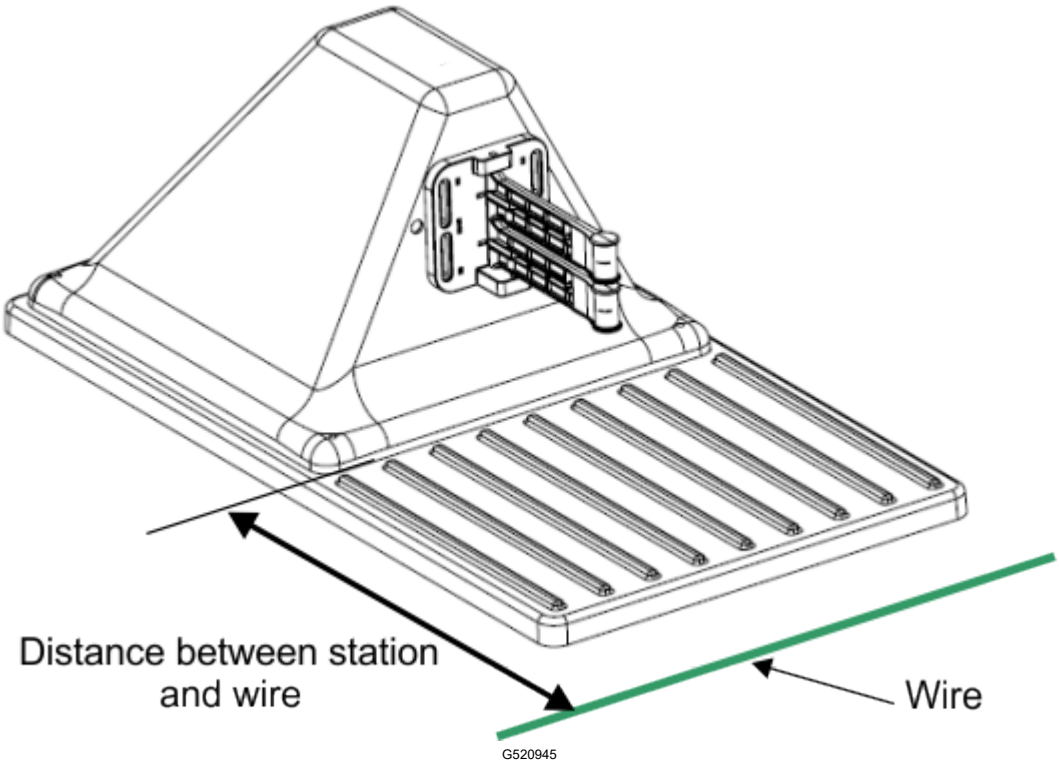

Turf Pro 300 only: The distance between the station and the loop wire is 0.57 m (22.4 inches).

Turf Pro 500 and Range Pro series only: The distance between the station and the loop wire is 0.67 m (26.4 inches).

Connecting the Peripheral and Loop Wires

IMPORTANT

The installation must be performed by a qualified professional.

Follow all national and regional codes.

⚠ WARNING ⚠

Live wires have a risk of electric shock.

Disconnect the power cord before connecting the loop/perimeter wiring.

1. If necessary, remove the lid by removing the nuts.

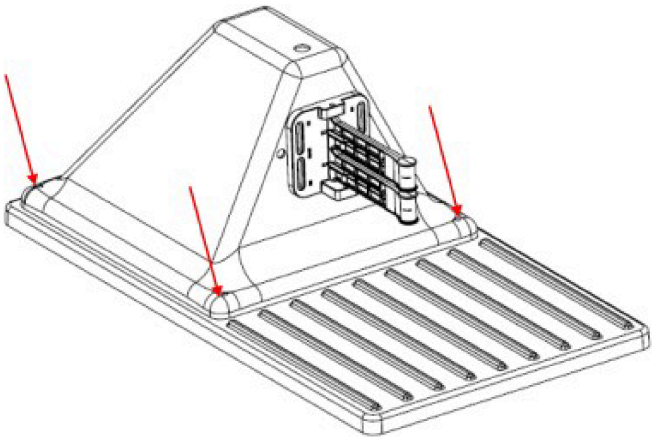

G521003

2. Feed the wire(s) through the base (2) of the station.

   Note: Model 30914 is shown.

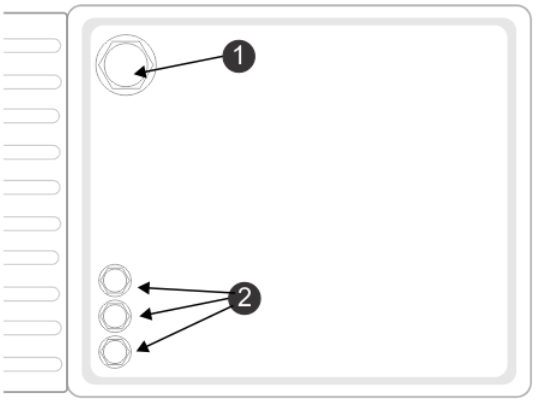

G520732

(1) Power cable input

(2) Peripheral cable input

The label for the circuit can be seen on the inside of the station base.

Note: Za and Zb are for the peripheral wires around the working areas. ZL is for the loop wire.

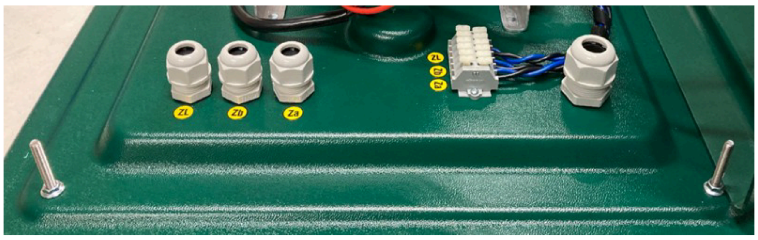

G521013

3. Connect the 2 wires to the corresponding connections on the station as shown.

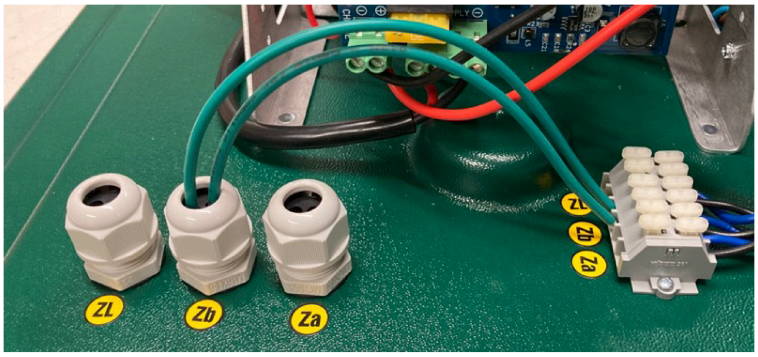

G521014

A schematic wiring diagram for the peripheral and loop wires is shown in the figure.

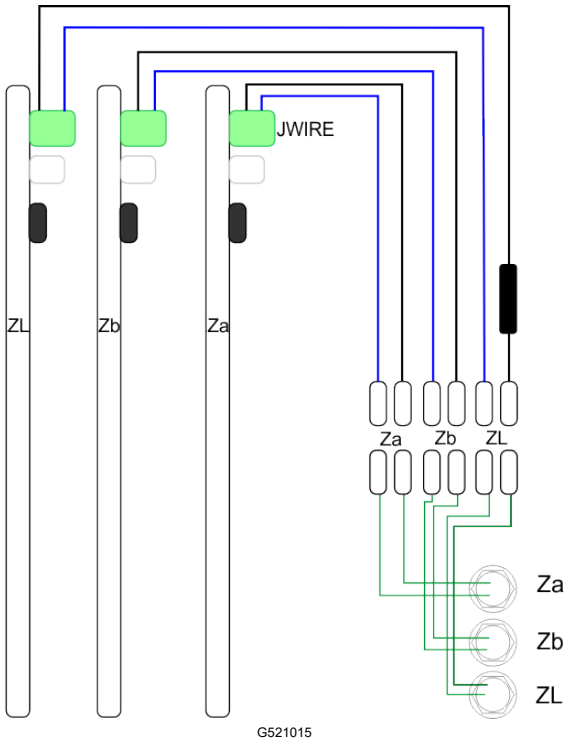

G521015

Connecting the Power Supply

IMPORTANT

The installation must be performed by a qualified professional.

Follow all national and regional codes.

- **The charging station incorporates an earth connection for functional purposes only.**
- **Use a cord with 14 AWG wire (or equivalent) with an outside diameter of 9 to 14mm (0.35 inch to 0.55 inch).**
- **UAE: Supply cords for commercial installations intended for direct connection to the supply mains shall be fitted with an appropriate plug complying with BS 1363 (having a marked rating of 13A or less).**
- **South Korea: Plugs for the connection of the apparatus to the supply main shall comply with the Korean requirement (KS C 8305).**

Note: The charging station may only be connected to a supply circuit protected by a Residual Current Device (RCD) with a tripping current of less than 30 mA.

1. Open the station by removing the nuts on the lid.

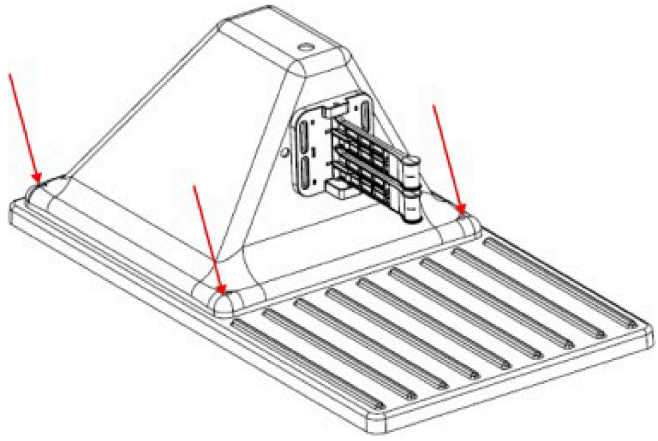

G521003

2. Thread the power cable through the base (1).

   Note: Model 30914 is shown below.

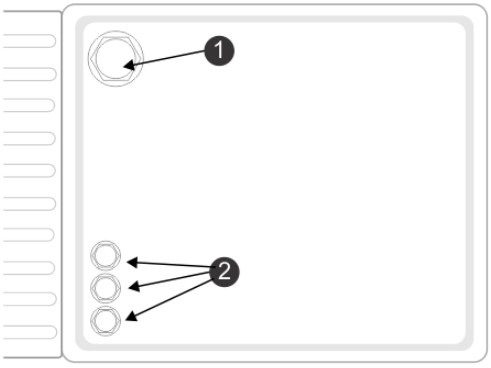

G520732

1 Power cable input

2 Peripheral cable input

Note: The station needs a good ground connection.

3. Connect the 3 wires to the corresponding connection in the station as shown in the following figure.

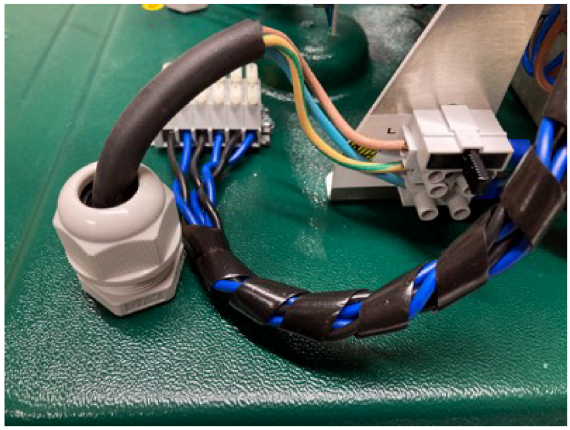

G521005

- Live: upper connection (brown)
- Ground: middle connection (green/yellow)
- Neutral: lower connection (blue)

Station and Robot Alignment

The position of the charging station must ensure that when the robot is in place:

- The height of the arms has been set to make good contact between the charging station and the contacts on the robot.
- The angle of the charge arms is at 30° to 45°. The robot can charge in either direction.

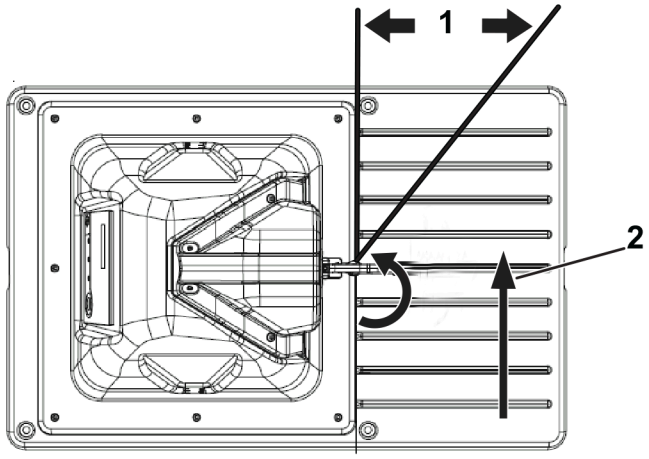

G541732

(1) 30° to 45°

(2) Robot direction

Multiple Station Installation

When considering the position of multiple stations, the criteria listed below should be taken into account.

In the case of a multi-station installation, it is recommended to place the stations as a group in a location with easy access to a power supply.

The station should be positioned on a straight section of the peripheral wire with defined minimum free distances on both the incoming and outgoing sides.

- The minimum length of wire on the incoming side is 3.5 m (11.5 ft).
- The minimum length of wire on the outgoing side is 3.5 m (11.5 ft).

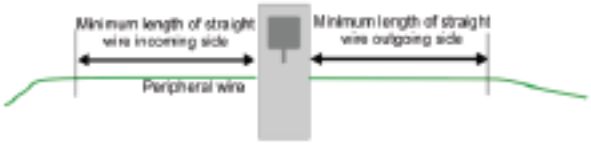

G527277

An obstacle free zone of at least 6 m (20 ft) is required.

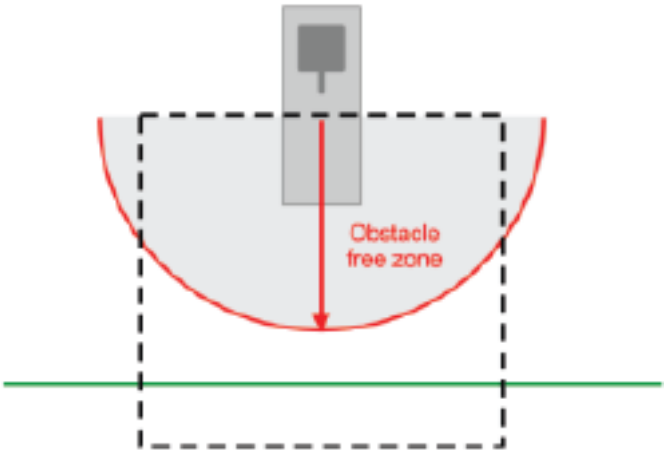

G527278

Multiple Stations Position

The dimensions associated with the positioning of multiple stations are shown below.

The minimum distance between stations is 15 m (49 ft).

In the example shown below, the peripheral wire bends around the station with a 2.5 m (8 ft) radius. This is to ensure that a working robot does not collide with a robot that is parked at the station.

Multiple Stations Position (continued)

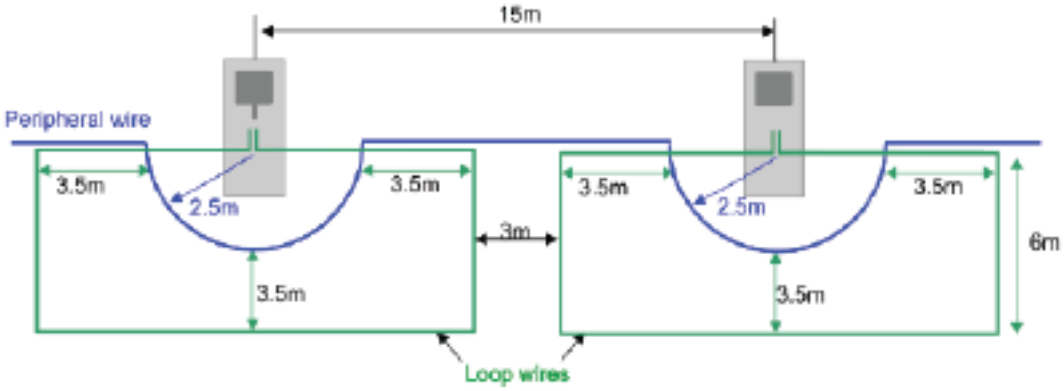

G527279

Mounting the Charging Station on Concrete

You can mount the charging station on a concrete base.

Note: The concrete should contain no reinforcing mesh or any other metallic parts.

The following figures show the recommended dimensions for this base.

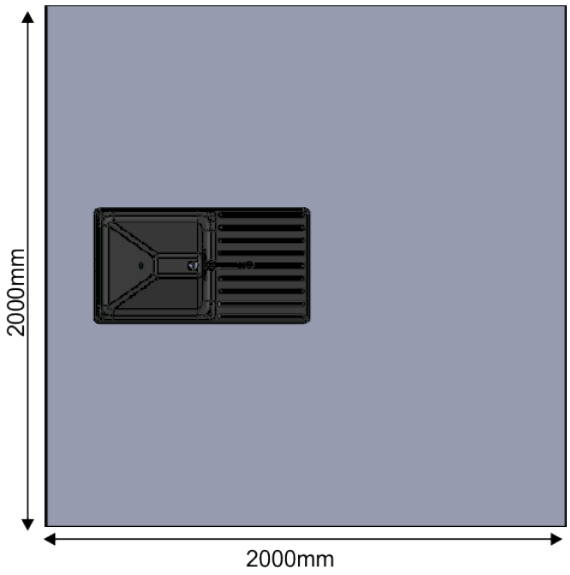

G520981

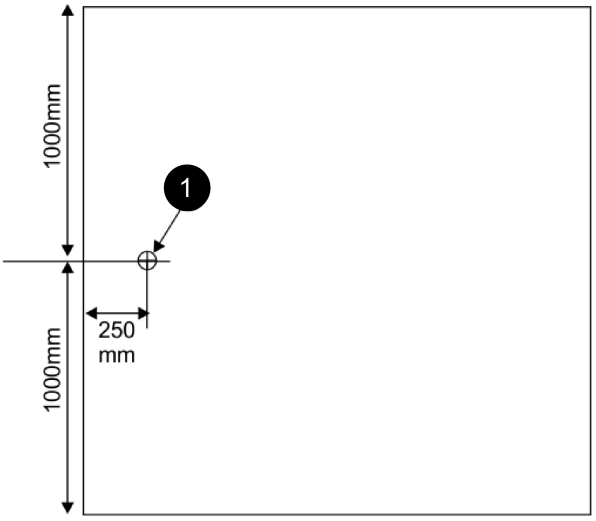

G520986

(1) Location of the power supply for the base

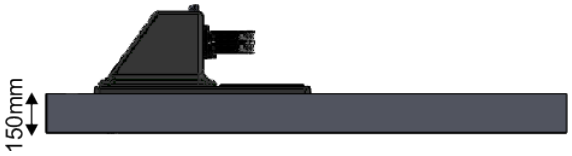

G520987

Installing the Channel Board Outside of the Charging Station

If multiple wires for working areas and loops are required, or if a wire is located at a significant distance from the charging station, it may be necessary to install a channel board closer to the wire rather than in the charging station. This can save on the total length of wire required.

It may also be necessary to install an external channel board, near the charging station, if there is not sufficient space in the charging station.

1. Insert the mains power cable through the gland as shown in the following figure.

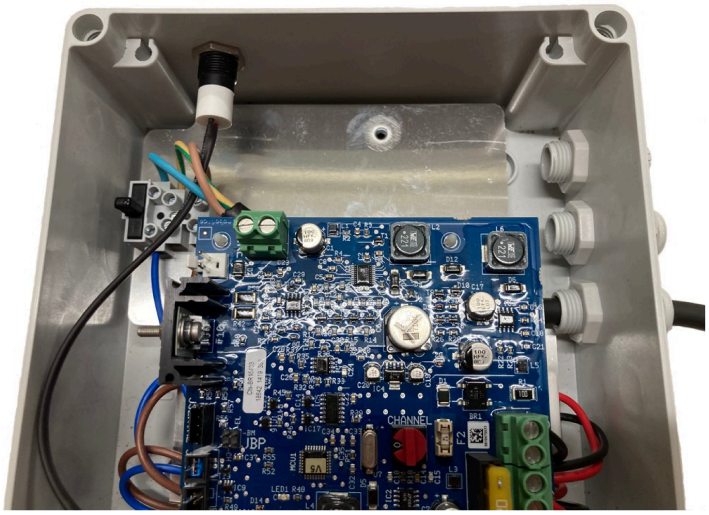

G521063

2. Connect the live (brown), ground (green/yellow), and neutral (blue) cables to the connectors in the box, as shown in the following figure.

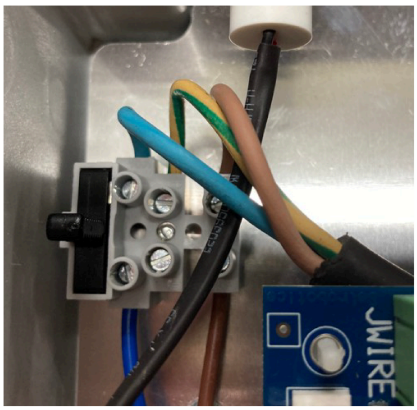

G521064

3. Insert the 2 peripheral wire cables through the glands as shown in the following figure.

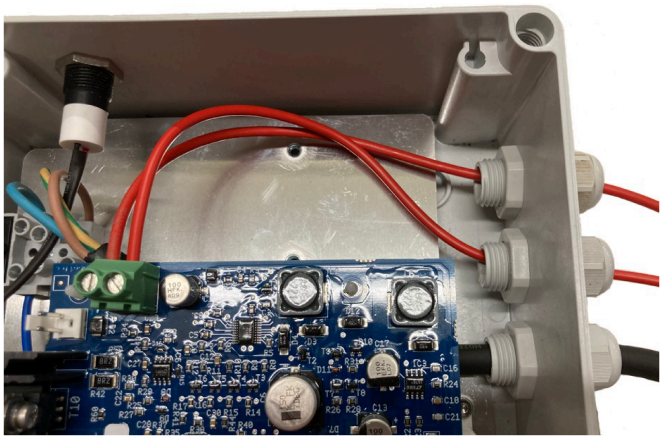

G521065

4. Connect the peripheral wire cables to the connectors on the card as shown in the previous figure.

Installing an Inductor in the Charging Station

If the total length of any of the wires is less than 200 m (656 ft), it is necessary to install an inductor in the charging station. This is important when using a small loop to return the robot to the charging station.

Note: The loop wire circuit is labelled ZL and has the inductor installed.

Place the inductor in series with the peripheral wires. One end must be connected to the station connection; the other must be connected to the peripheral wire.

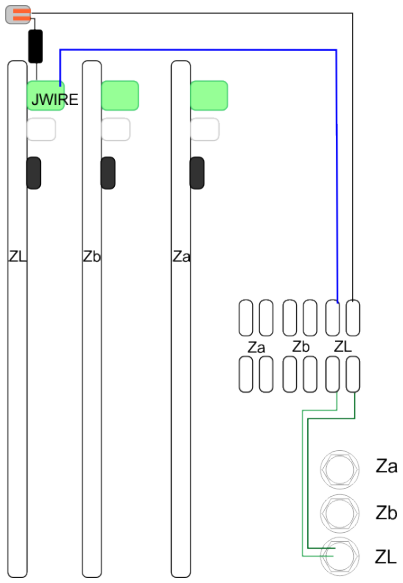

G521078

In the example show in the following figure, an end of the inductor is connected directly to the JWIRE connection on the ZL card.


G521079

The other end of the inductor is connected to a side of the 2-way connector. The other end of the 2-way connector is connected to the peripheral wire.

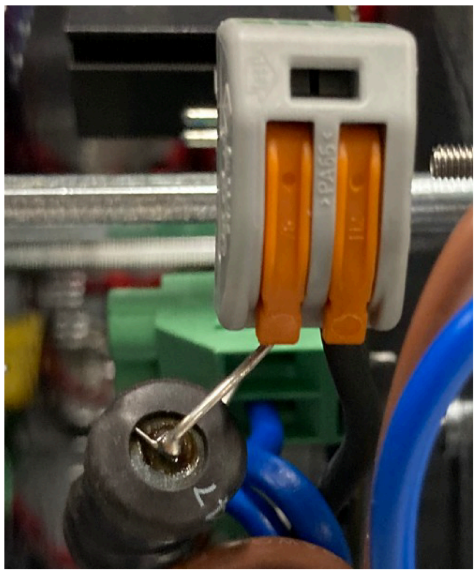

G521080

Ball-Collecting Robot Information

Stations on a Golf Course

A typical installation arrangement for a golf course includes ball-collecting and mowing robots.

The ball-collecting robots require one station which is connected to a drop pit where the balls are unloaded. One charging station is also required for each of the other ball-collecting and mowing robots.

All stations require a station loop wire to enable the robot to locate the station where it needs to charge. It is possible to connect multiple loops to a single station.

If there is more than one ball-collecting robot an additional busy loop is required around the drop pit station, which indicates that the drop pit is in use and that the other ball-collecting robot must wait until it is free.

Adapting the Drop Pit Station

A station needs to be attached to the drop pit.

The base that is normally supplied with the station must be rotated. You need to rotate the plastic base so it is on the other side of the charger.

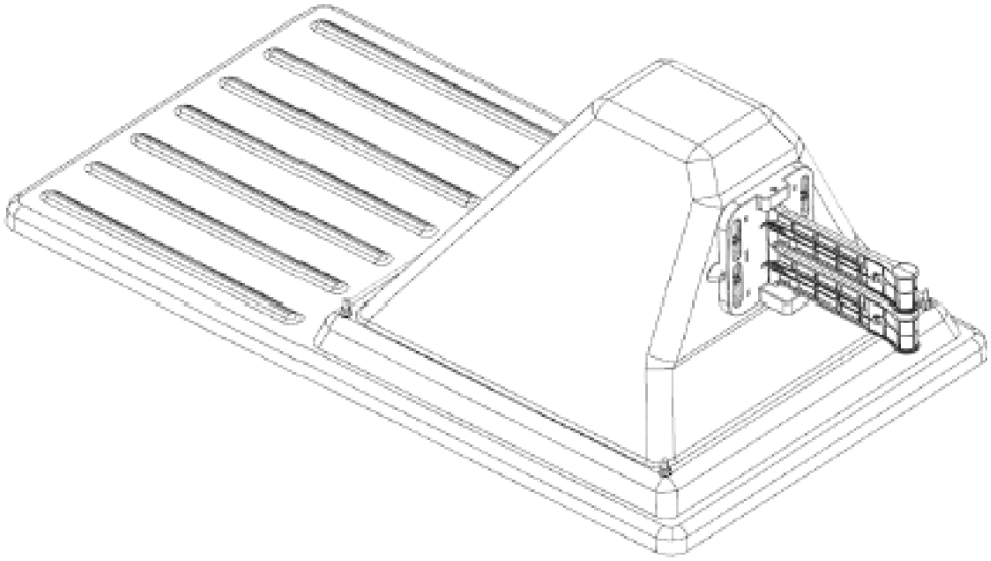

G541710

Drop Pit

The drop pit is required for the ball-collecting robot to deposit the balls it has collected. When the robot arrives at the drop pit station, contact with the station arms triggers the release of the balls.

- If there is only one ball-collecting robot, only one station is required: this acts as the trigger for the discharge of the balls and charges the robot's battery when needed.
- If there is more than one ball-collecting robot, the drop pit station needs to be accessible to all of them. In this case an additional wire is required to indicate that the drop pit is in use and that a second robot must wait to access it.

Drop Pit Dimensions

When the robot has collected a certain number of balls, or after a defined time period, it moves to the drop pit. The contact with the charging station triggers the robot to release the balls into the pit.

This topic describes the basic elements of the drop pit. Various ball drop options are shown below.

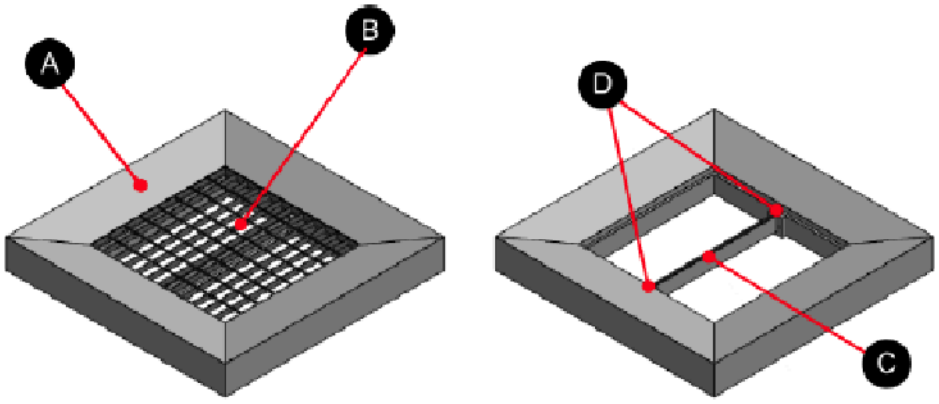

G540875

1 Housing

2 Grid

Drop Pit Dimensions (continued)

③ Peripheral wire support

④ Attachment for the peripheral wire support

Grid Dimensions

Grating	800 x 800 x 30mm (31.5 x 31.5 x 1.2 inches)
Mesh size	66 x 99 mm (2.6 x 3.9 inches)
Steel thickness	3 mm (0.118 inches)
Finish	Galvanized

The figure below shows the dimensions of the concrete housing required for the drop pit. The red arrow indicates the direction in which the robot approaches the drop pit.

Note: All measurements on the figure below are in millimeters.

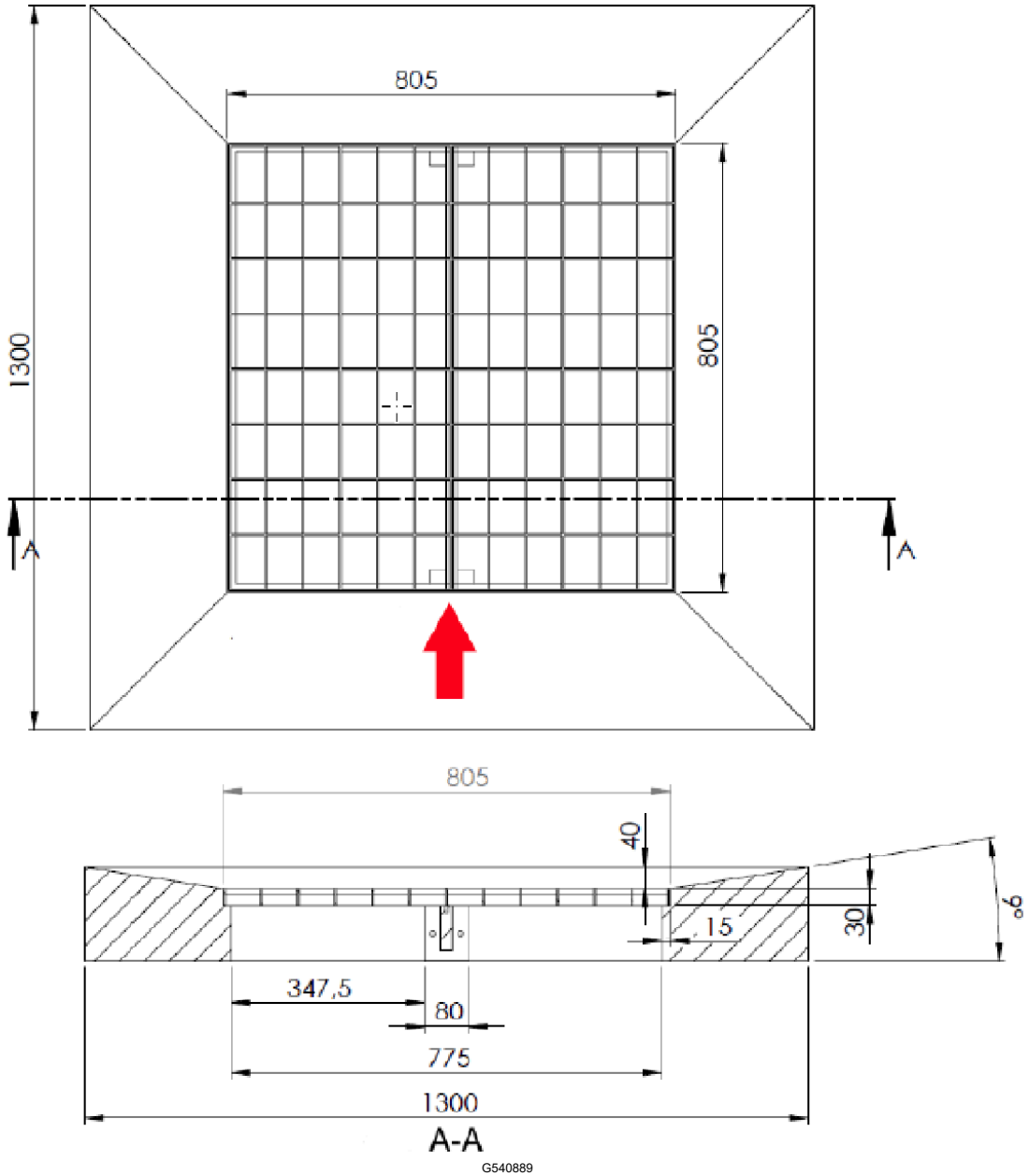

Drop Pit Dimensions (continued)

Millimeters Converted to Inches

1,300 mm	51.18 inches
805 mm	31.7 inches
775 mm	30.5 inches
347.5 mm	13.68 inches
80 mm	3.15 inches
40 mm	1.57 inches
30 mm	1.18 inches
15 mm	0.6 inches

Drop Pit Ramp

If the station connected to the drop pit is not at ground level, a ramp is required.

The support for the ramp must be made of wood, in order to avoid any interference with the signal.

Anti-slip stickers must be attached to the surface to prevent the robot slipping as it ascends and descends the ramp.

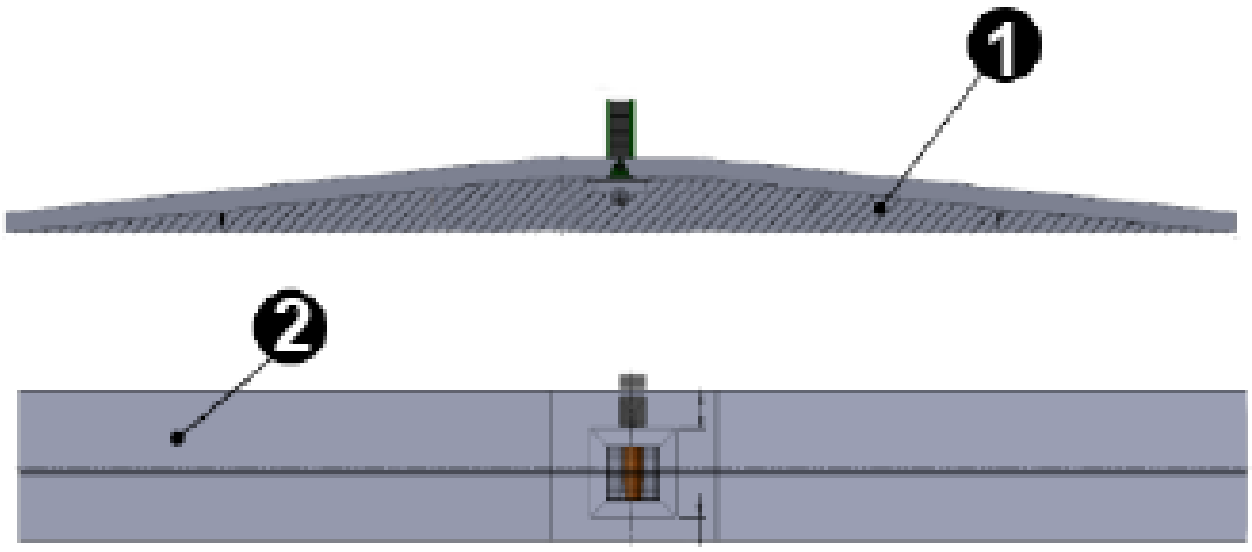

G541006

(1) Wooden support

(2) Anti-slip stickers

Drop Pit Collection

When using a ramp, balls can drop into an open cart that can pull from under the ramp.

There are also automated third party range ball handling systems that are available.

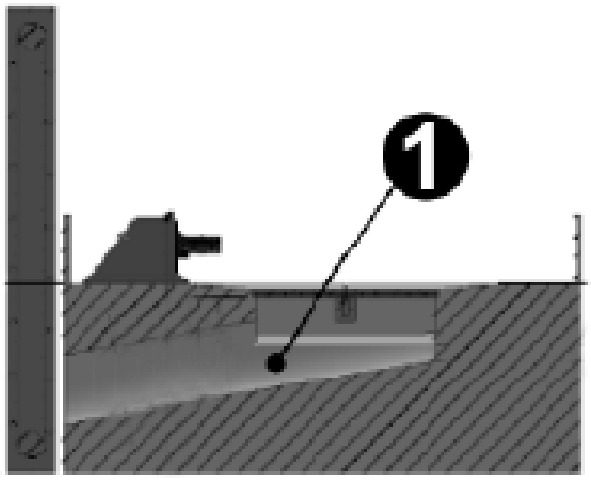

G540995

(1) Plastic tube

The plastic tube is used to evacuate the balls from the pit. It must be 300 mm (11.8 inches) in diameter.

Maintenance

Inspecting and Cleaning the Charge Station

During periods of wet weather, perform inspection and cleaning on a regular basis.

1. Remove robot from charging station (if required).
2. Visually inspect the unit, replace damaged components.
3. Check all electrical connectors, reconnect if necessary.
4. Use a plastic scraper, nylon brush, compressed air, or a damp cloth to clean dirt, grass, sticks, or obstructions.

   Note: Do not use a high-pressure washer or running water for cleaning. Never use solvents.

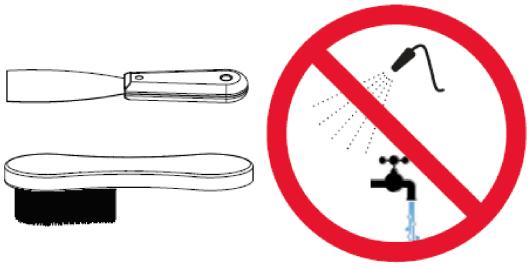

G525933

Checking the Station Voltage

The adjustors can be found on the rear of the transformer inside the station.

Note: Check the station voltage and current before using the station.

Remove the black covers and adjust the levels using a screwdriver.

- Voltage: 28 V
- Current: 10 A

Station Torque Values

This section lists all the torque values that must be applied to the charging station.

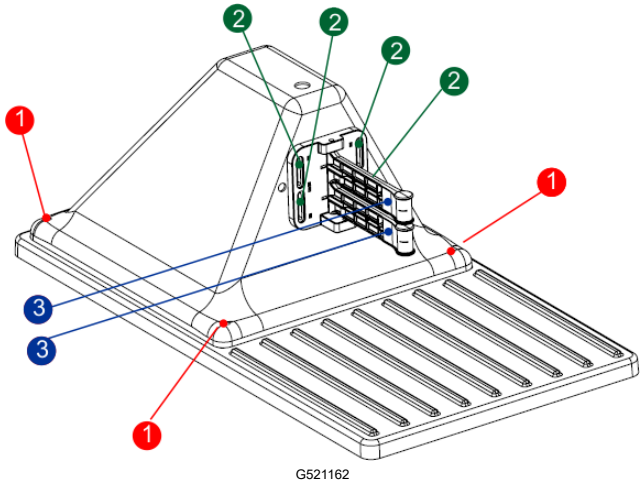

G521162

(1) 2 N·m (1.5 ft-lb)

(2) 2 N·m (1.5 ft-lb)

(3) 2 N·m (1.5 ft-lb)

Notices

CE	Your robot meets European standards.
	Recycle: Waste electrical and electronic equipment is subject to selective collection. Please recycle your robot according to the standards in force.
Icons on the battery	
	Make sure you are familiar with the documentation before handing and using the battery.
	Do not allow the battery to come into contact with water.
	Caution–Take care when handling and using the battery. Do not crush, heat, incinerate, short circuit, dismantle, or immerse in any liquid. Risk of leakage or rupture. Do not charge below 0°C

	(32°F). Only use the charger specified in the user's manual.
	Recycle your battery. Refer to the user's manual for battery recycling instructions.
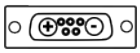	Indicates the battery polarity.

Notes:

Notes:


TORO®