FORM NO. 3312-855

TORO®

MODEL NO. 20675-6000001 & Up

PARTS CATALOG

21″ S.P. REAR BAGGER

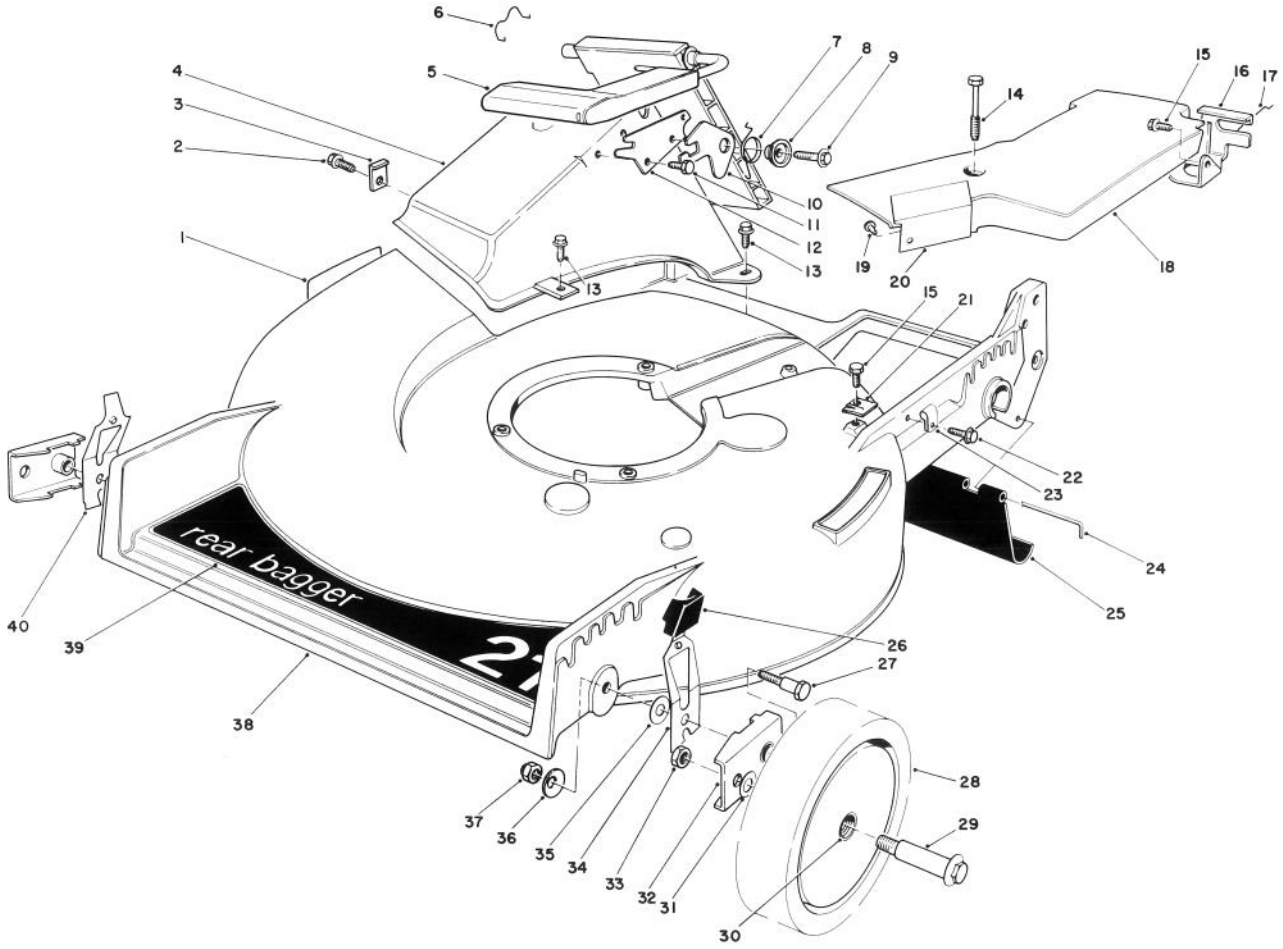

HOUSING ASSEMBLY

Ref. No.	Part No.	Description	No. Used
1	39-5770	Decal — Danger	1
2	12-3270	Screw — Thread Forming Hex. Washer Hd.	1
3	47-6540	Clip — Tunnel	1
4	46-3500	Tunnel — Discharge	1
5	51-0200	Discharge Door Assembly	1
6	47-5840	Retainer — Door	1
7	33-4860	Spring — Torsion	1
8	43-4840	Spacer — Latch	1
9	46-8091	Screw — Self Tapping Hex. Washer Hd.	1
10	42-4010	Latch — Door	1
11	46-8090	Screw — Self Tapping Hex. Washer Hd.	1

Ref. No.	Part No.	Description	No. Used
12	23-1040	Plate — Latch	1
13	46-6811	Screw w/Washer	3
14	37-7260	Capscrew — Special	2
15	32144-11	Screw — Thread Forming Hex. Washer Hd. (used on units with serial no. 6000101-6001100)	2
15	32144-11	Screw — Thread Forming Hex. Washer Hd. (used on units with serial no. 6001101 & up)	1
16	46-5870	Bracket — Traction Adjustment	1
17	46-7030	Retainer — Cable	1

©The Toro Company — 1986

PRICE $1.00

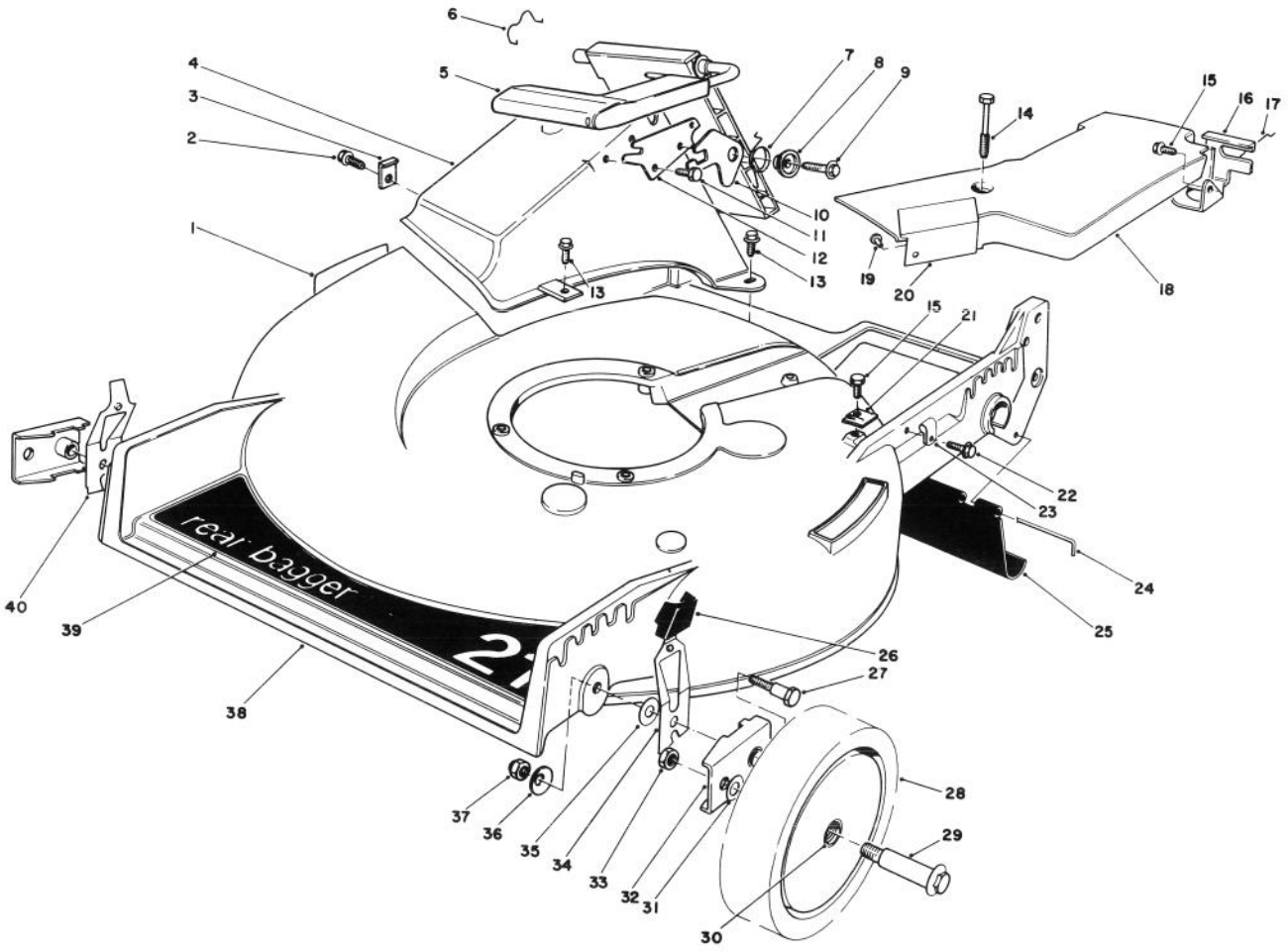

HOUSING ASSEMBLY (Continued)

Ref. No.	Part No.	Description	No. Used
18	52-7400	Belt Cover Assembly (Incl. Ref. #19 & 20)	1
19	3295-35	Rivet	2
20	38-8730	Shield — Heat	1
21	46-5610	Clamp — Cable (used on units with serial no. 6000101-6001100)	1
22	12-5450	Screw — Self Tapping Slotted Hex. Hd. (used on units with serial no. 6000101-6001100)	1
23	2412-83	R Clamp (used on units with serial no. 6000101-6001100)	1
24	33-3208	Rod — Shield	1
25	44-0580	Shield — Rear	1
26	25-7740	Knob — Spring Arm	2
27	44-5270	Screw — Pivot	2
28	11-9509	Wheel & Tire Assembly (Incl. Ref. #30)	2

Ref. No.	Part No.	Description	No. Used
29	27-6231	Bolt — Wheel (used on units with serial no. 6000101-6001100)	2
29	27-6230	Bolt — Wheel (used on units with serial no. 6001101)	2
30	27-6250	Bushing	4
31	40-1940	Washer — Wheel	2
32	47-2940	Arm — Pivot	2
33	3296-6	Nut — Lock (used on units with serial no. 6000101-6001100)	2
33	52-3620	Nut — Lock (used on units with serial no. 6001101 & up)	2
34	52-7480	Spring Arm Assembly — L.H.	1
35	5-4460	Washer — Pivot	2
36	3290-456	Washer — Bellville	2
37	3296-29	Nut — Lock	2
38	12-4299	Housing (Incl. Ref. #1)	1
39	44-0450	Decal — 21" Rear Bagger	1
40	52-7490	Spring Arm Assembly — R.H.	1

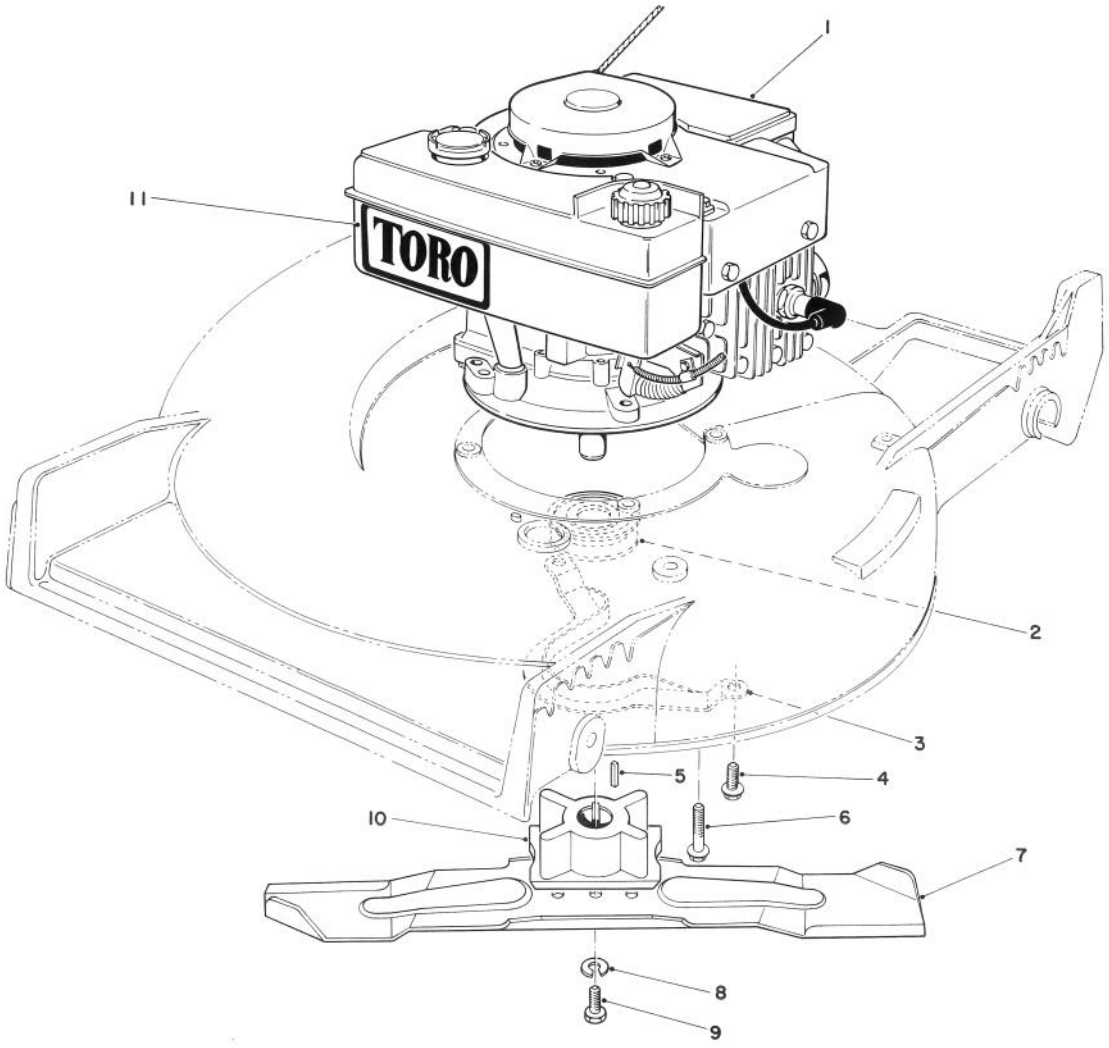

ENGINE ASSEMBLY

Ref. No.	Part No.	Description	No. Used
1		Engine	1
2	23-0130	Pulley — Driver	1
3	40-5720	Guide — Belt	1
4	11-9760	Screw — Thread Forming	2
5	7-0036	Key — Square	1
6	11-0581	Screw — Thread Forming	3

Ref. No.	Part No.	Description	No. Used
7	42-1000	Blade — 21"	1
8	26-0670	Screw — Blade	1
9	3253-22	Lockwasher	1
10	46-3490	Retainer — Blade	1
11	44-0510	Decal — Toro (used on units with serial no. 6000101-6001100)	1

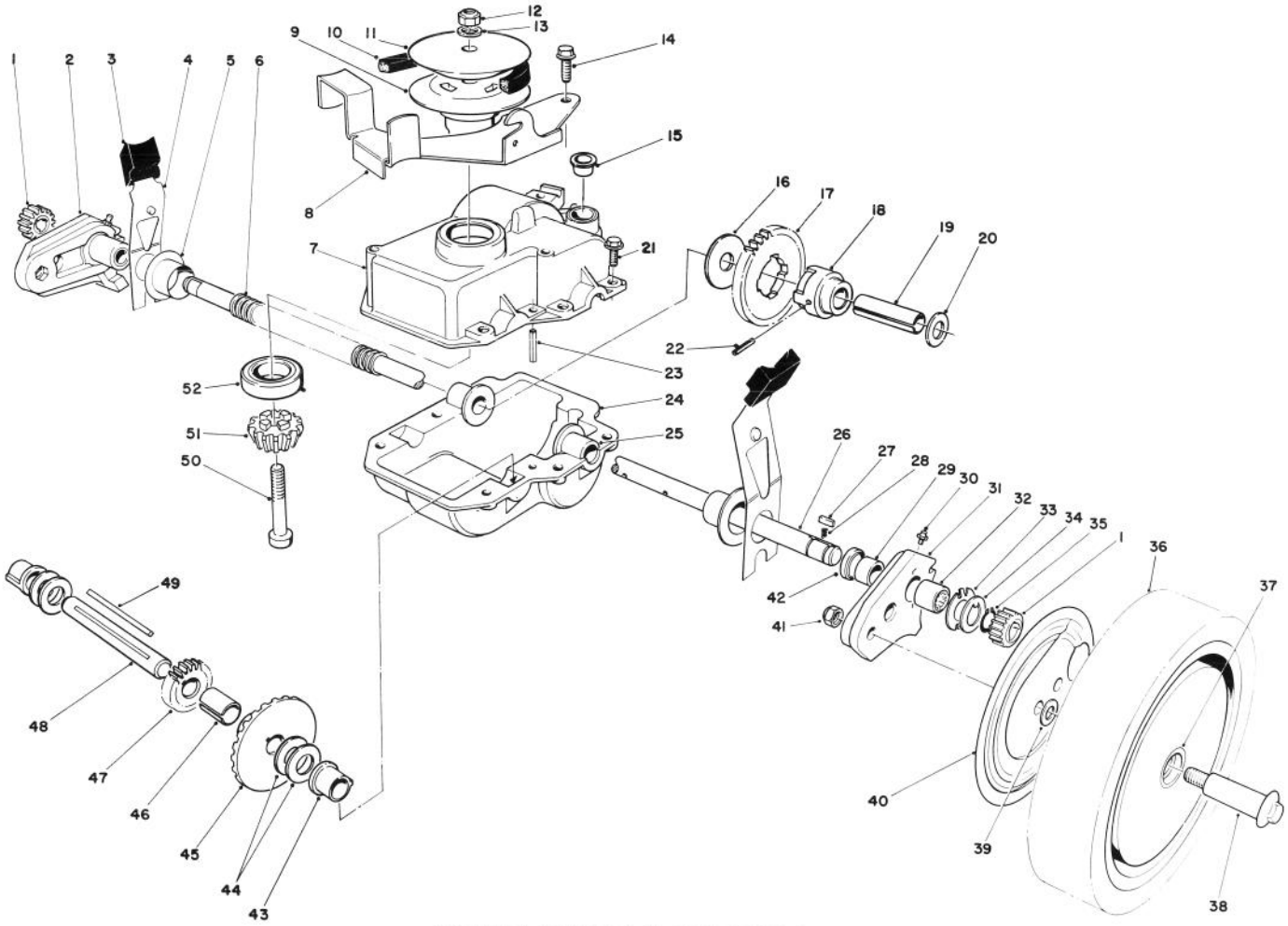

GEAR CASE ASSEMBLY

(used on units with serial no. 6000101-6001100)

Ref. No.	Part No.	Description	No. Used
1	39-9160	Pinion	2
2	49-7720	Pivot Arm Assembly — R.H. (Incl. Ref. #29, 30, 32 & 42)	1
3	25-7740	Knob — Spring Arm	2
4	44-1010	Spring Arm Assembly	2
5	42-3520	End Cap	2
6	24-7922	Cover — Drive Shaft	1
7	49-8370	Case — Upper	1
8	49-8460	Bracket — Belt Guide	1
9	49-8330	Pulley — Lower	1
10	36-8070	V-Belt	1
11	49-8340	Pulley — Upper	1
12	3296-29	Locknut	1
13	3256-2	Washer — Flat	1
14	12-3270	Screw — Special	2
15	12-0510	Caplug	1
16	29-9690	Washer	1
17	29-9271	Gear — 42T	1
18	49-4280	Adapter — Drive	1
19	36-9120	Spacer — Output Shaft	1
20	36-4780	Washer	1
21	49-2040	Screw — Self Tapping	6
22	32121-109	Pin — Coil	1
23	32121-100	Pin — Coil	1
24	29-9410	Case — Lower	1
25	47-5220	Bushing — Output Shaft	2
26	44-0850	Shaft — Output	1
27	39-9680	Key — Rectangular	2

Ref. No.	Part No.	Description	No. Used
28	39-9650	Spring	2
29	47-2890	Bushing	2
30	302-56	Grease Fitting	2
31	49-7710	Pivot Arm Assembly — L.H. (Incl. Ref. #29, 30, 32 & 42)	1
32	48-2060	Bearing — Roller	2
33	49-7690	Washer — Thrust, Inner	2
34	49-7700	Washer — Thrust, Outer	2
35	32151-68	Ring — Retaining	4
36	11-9519	Wheel, Tire & Gear Assembly (Incl. Ref. #37)	2
37	27-6250	Bushing — Wheel	4
38	27-6231	Bolt — Wheel	2
39	40-1940	Washer — Wheel Bolt	2
40	52-4860	Cover — Wheel	2
41	3296-6	Locknut	2
42	47-6730	Seal	2
43	52-5410	Bushing — Short Shaft	2
44	36-4791	Washer — Thrust	4
45	39-6670	Gear — Bevel	1
46	36-9130	Spacer — Short Shaft	1
47	46-3550	Gear — 14T	1
48	46-9470	Shaft — Intermediate	1
49	39-7843	Key — Square	1
50	3274-61	Screw — Socket Head	1
51	49-8350	Pinion — Bevel	1
52	38-7820	Bearing — Ball	1
*	49-4300	Gear Case Complete	1

*Not Illustrated

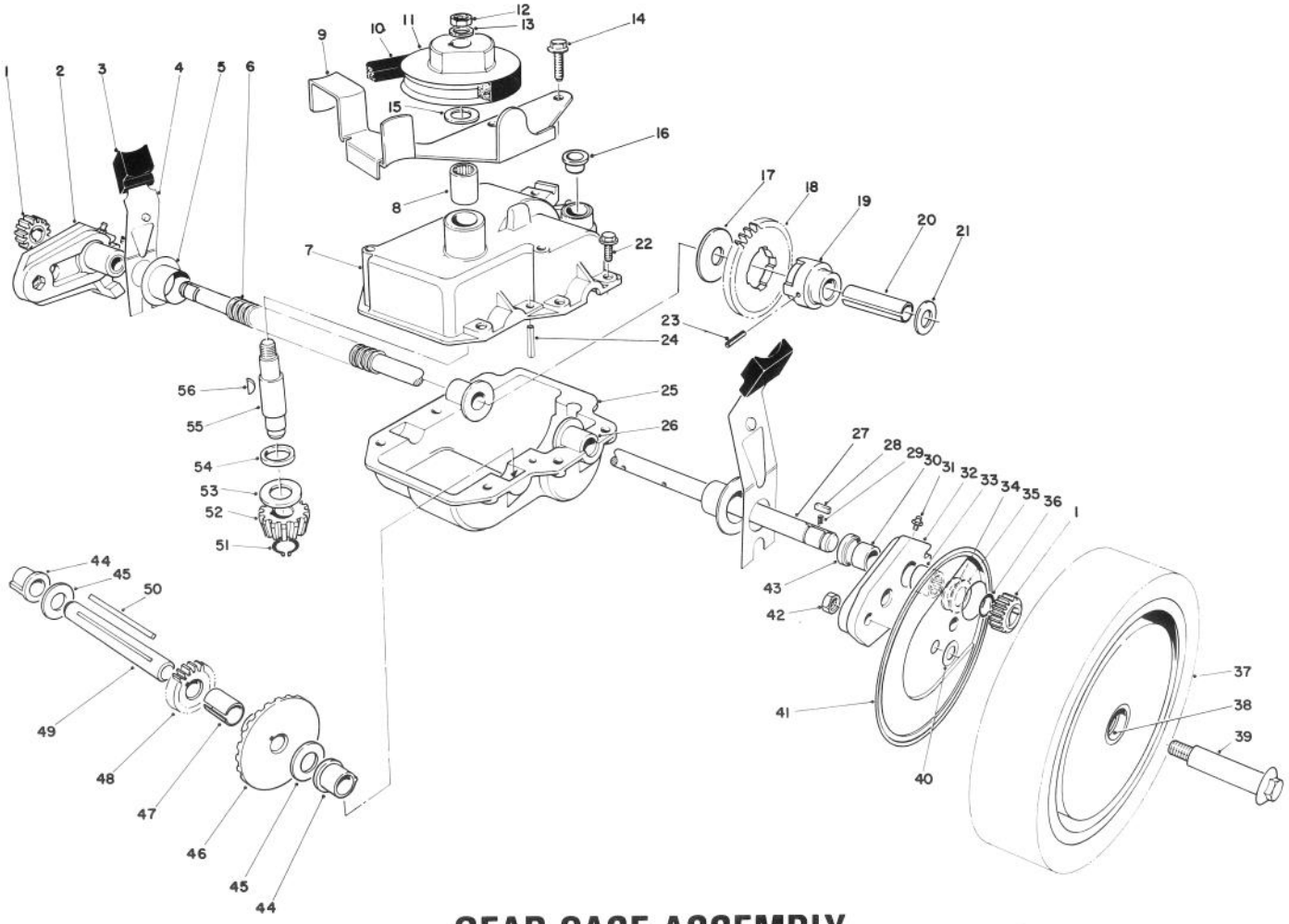

GEAR CASE ASSEMBLY

(used on units with serial no. 6001101 & up)

Ref. No.	Part No.	Description	No. Used
1	39-9160	Pinion	2
2	49-7720	Pivot Arm Assembly — R.H. (Incl. Ref. #30, 31, 33 & 43)	1
3	25-7740	Knob — Spring Arm	2
4	44-1010	Spring Arm Assembly	2
5	42-3520	End Cap	2
6	24-7922	Cover — Drive Shaft	1
7	39-7283	Case — Upper	1
8	47-6720	Bearing	1
9	49-8460	Bracket — Belt Guide	1
10	36-8070	V-Belt	1
11	39-6740	Pulley	1
12	3296-5	Nut — Lock	1
13	3256-45	Washer	1
14	12-3270	Screw — Special	2
15	36-4790	Washer — Thrust	1
16	12-0510	Caplug	1
17	29-9690	Washer	1
18	29-9271	Gear — 42T	1
19	49-4280	Adapter — Drive	1
20	36-9120	Spacer — Output Shaft	1
21	36-4780	Washer	1
22	49-2040	Screw — Self Tapping	6
23	32121-109	Pin — Coil	1
24	32121-100	Pin — Coil	1
25	29-9410	Case — Lower	1
26	47-5220	Bushing — Output Shaft	2
27	53-7870	Shaft — Output	1
28	39-9680	Key — Rectangular	2
29	39-9650	Spring	2

Ref. No.	Part No.	Description	No. Used
30	47-2890	Bushing	2
31	302-56	Fitting — Grease	2
32	49-7710	Pivot Arm Assembly — L.H. (Incl. Ref. #30, 31, 33 & 43)	1
33	48-2060	Bearing — Roller	2
34	49-7690	Washer — Thrust, Inner	2
35	49-7700	Washer — Thrust, Outer	2
36	32151-61	Ring — Retaining	4
37	11-9519	Wheel, Tire & Gear Assembly (Incl. Ref. #38)	2
38	27-6250	Bushing — Wheel	4
39	27-6231	Bolt — Wheel	2
40	40-1940	Washer — Wheel Bolt	2
41	52-4860	Cover — Wheel	2
42	52-3620	Nut — Lock	2
43	47-6730	Seal	2
44	52-5410	Bushing — Short Shaft	2
45	36-4791	Washer — Thrust	4
46	39-6670	Gear — Bevel	1
47	36-9130	Spacer — Short Shaft	1
48	46-3550	Gear — 14T	1
49	46-9470	Shaft — Intermediate	1
50	39-7841	Key — Square	1
51	32151-57	Ring — Retaining	1
52	39-6660	Pinion — Bevel	1
53	47-2910	Washer — Thrust	1
54	47-7260	Seal	1
55	39-6690	Shaft — Input	1
56	3257-1	Key	2
*	52-4871	Gear Case Complete	1

*Not Illustrated

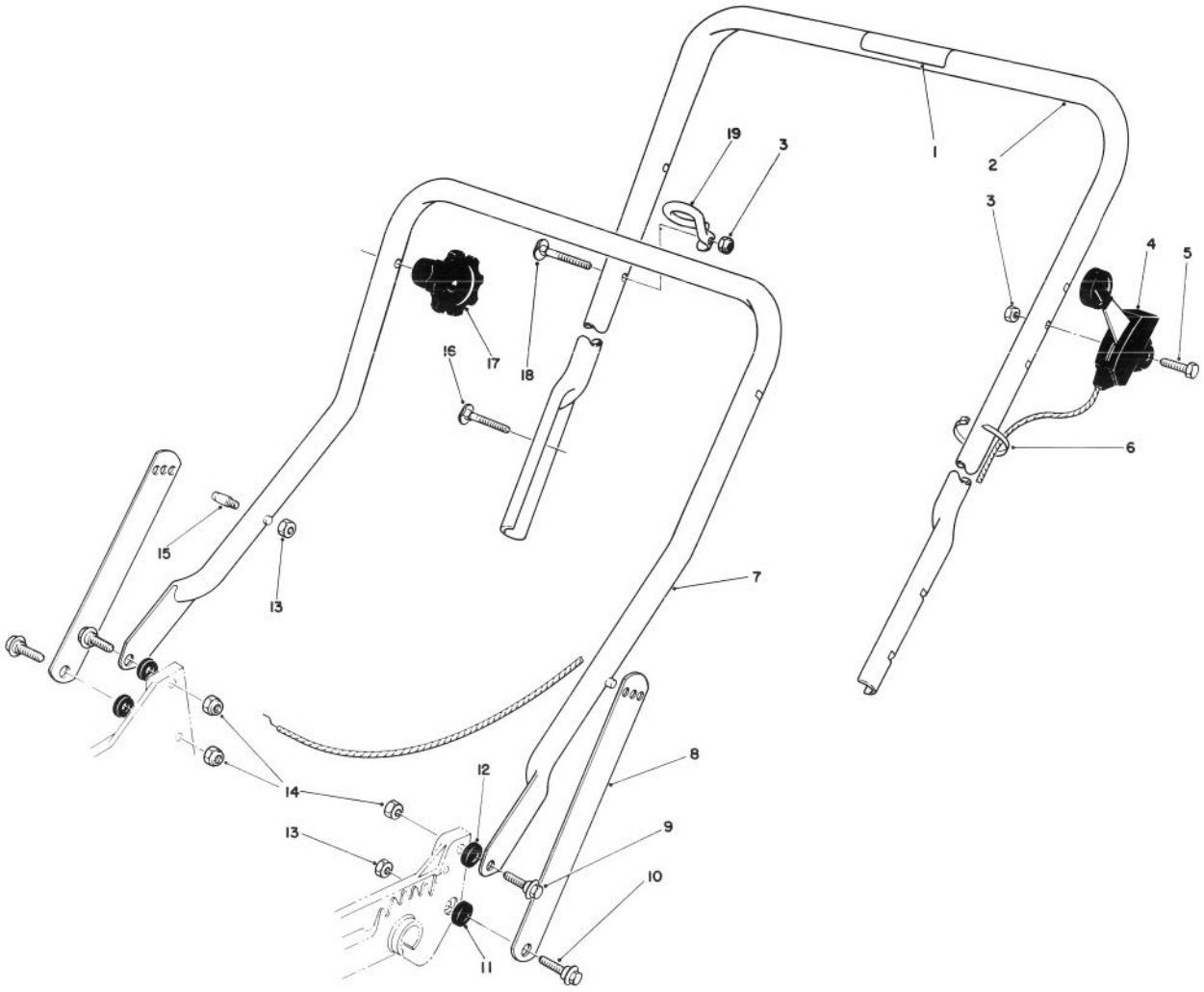

HANDLE ASSEMBLY

Ref. No.	Part No.	Description	No. Used
1	52-7520	Decal — Instructions	1
2	11-9559	Handle — Upper (Incl. Ref. #1)	1
3	3296-42	Locknut	2
4	46-6000	Control — Throttle Bend Type #1 Sheath Lg. 49 inches Wire Lg. 2-1/8 inches	1
5	321-11	Capscrew	1
6	3290-378	Cable Tie (used on units with serial no. 6000101-6001100)	1
6	3290-378	Cable Tie (used on units with serial no. 6001101 & up)	2
7	43-1360	Handle — Lower (used on units with serial no. 6000101-6001100)	1
7	43-1361	Handle — Lower (used on units with serial no. 6001101 & up)	1

Ref. No.	Part No.	Description	No. Used
8	43-1370	Latch — Handle	2
9	27-7211	Screw — Shoulder	2
10	27-7210	Screw — Shoulder	2
11	3-3287	Spacer — Handle Latch (used on units with serial no. 6000101-6001100)	4
11	3-3287	Spacer — Handle Latch (used on units with serial no. 6001101 & up)	2
12	55-8060	Spacer (used on units with serial no. 6001101 & up)	2
13	3296-47	Locknut	3
14	3296-29	Locknut	3
15†	49-2750	Pin — Handle	2
16	17-9421	Screw — Handle	2
17	19-4050	Knob — Handle Release	2
18	46-6433	Screw — Handle	1
19	46-8080	Guide — Rope	1

†Service Replacement Part.

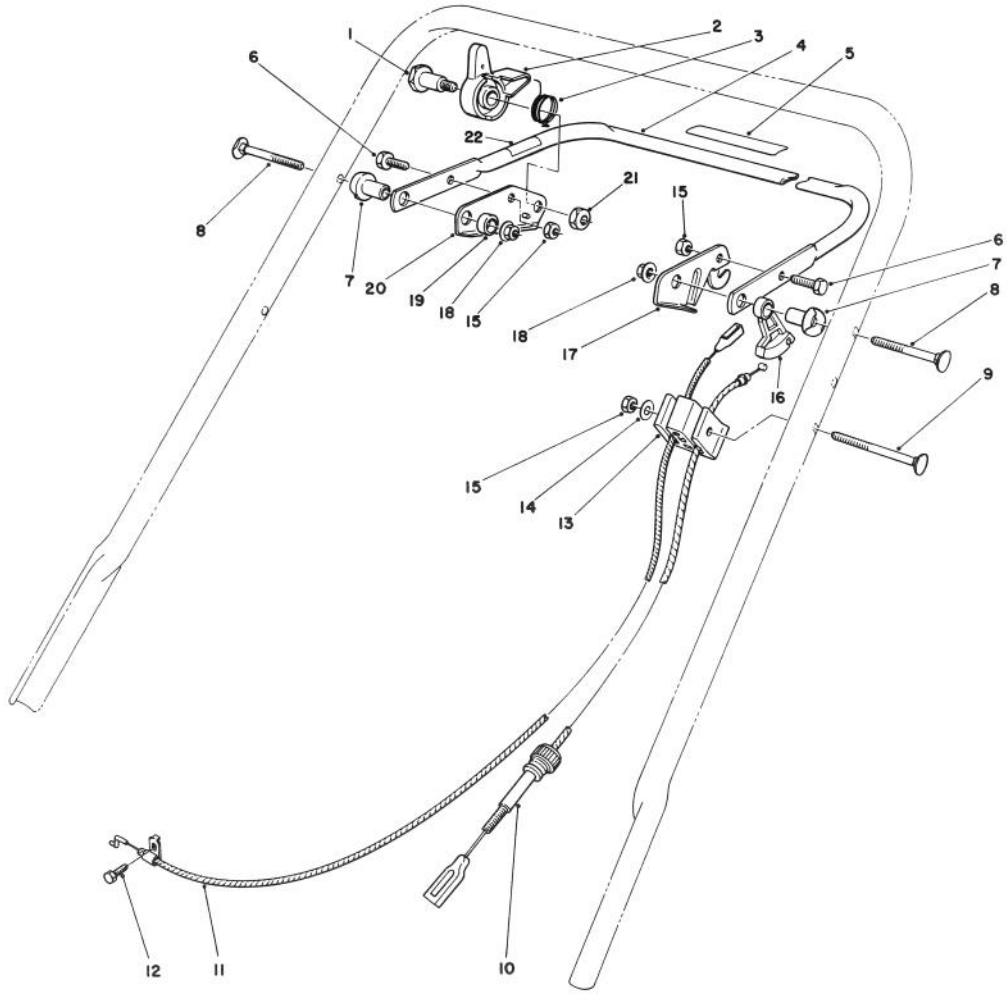

TRACTION CONTROL ASSEMBLY

Ref. No.	Part No.	Description	No. Used
1	7-0846	Bolt — Shoulder	1
2	51-0300	Lockout — Neutral	1
3	51-0290	Spring — Torsion	1
4	49-4220	Bar — Control	1
5	51-0970	Decal — Variable Speed	1
6	321-3	Capscrew	2
7	49-1630	Support — Spacer	2
8	17-9421	Screw — Handle	2
9	46-6434	Screw — Handle	1
10	46-5481	Cable — Traction	1
11	46-8011	Cable — Brake	1
12	2210-250	Capscrew	1

Ref. No.	Part No.	Description	No. Used
13	46-6980	Support — Cable	1
14	3256-22	Washer — Flat	1
15	3296-42	Locknut	3
16	46-5520	Lever — Traction	1
17	46-7950	Lever — Control	1
18	3296-58	Locknut	2
19	256-276	Spacer — Nylon	1
20	51-0280	Bracket — Lockout	1
21	3296-59	Locknut	1
22	53-4440	Decal — Locknut (used on units with serial no. 6000101-6001100)	1

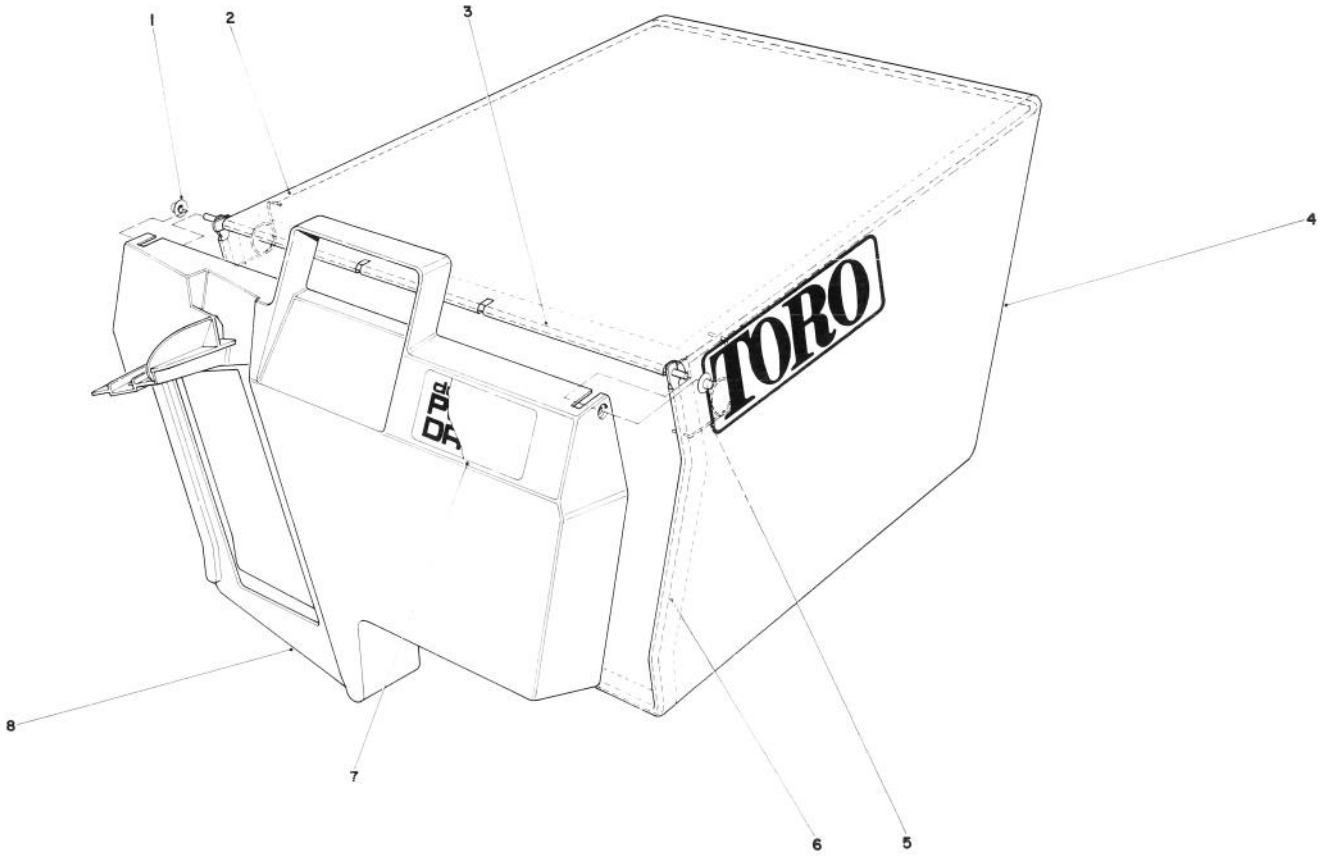

GRASS BAG ASSEMBLY NO. 11-0189

Ref. No.	Part No.	Description	No. Used
1	3290-422	Push Nut	2
2	42-4030	Bag Frame Upper	1
3	33-4820	Hinge Bag Door	1
4	8-2759	Grass Bag	1

Ref. No.	Part No.	Description	No. Used
5	36-6910	Spring	2
6	42-4020	Frame Bag	1
7	40-2240	Decal — Bag Door	1
8	37-1392	Door Grass Bag	1

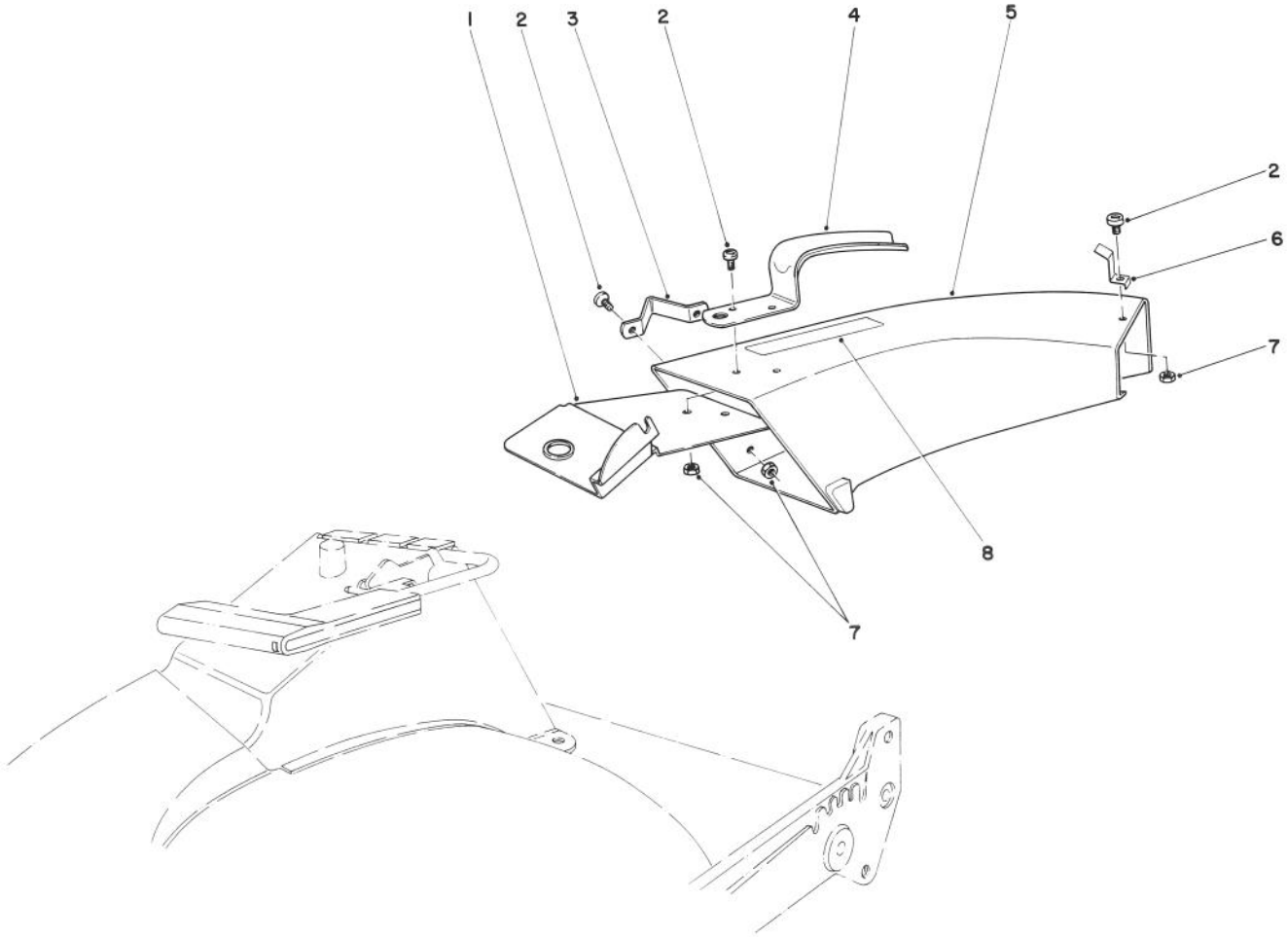

SIDE DISCHARGE CHUTE MODEL NO. 59108 (Optional)

Ref. No.	Part No.	Description	No. Used
1	44-2330	Plate — Discharge Chute	1
2	3251-3	Screw	5
3	46-6580	Bracket — Side	1
4	42-1340	Handle — Grass Chute	1

Ref. No.	Part No.	Description	No. Used
5	11-7149	Chute — Discharge (Incl. Ref. #8)	1
6	49-2630	Clip — Cable Stop	1
7	3296-12	Locknut	5
8	39-9120	Decal — Caution	1

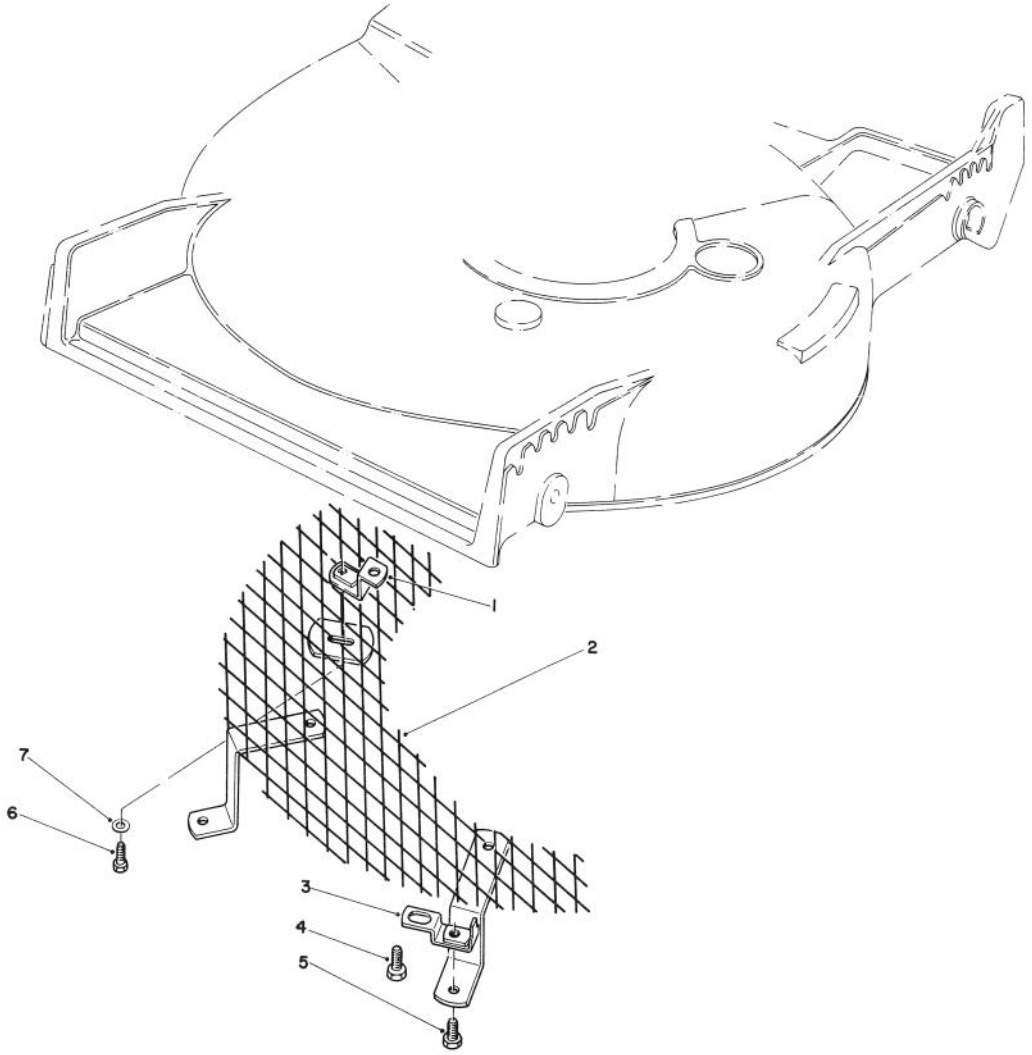

LEAF SHREDDER KIT MODEL NO. 59157 (Optional)

Ref. No.	Part No.	Description	No. Used
1	47-6260	Bracket	1
2	47-6230	Screen	1
3	46-4880	Mounting Bracket	2
4	32144-11	Screw — Self Tapping	3

Ref. No.	Part No.	Description	No. Used
5	321-3	Capscrew — Hex Hd.	2
6	321-5	Capscrew — Hex Hd.	1
7	3256-1	Washer	1

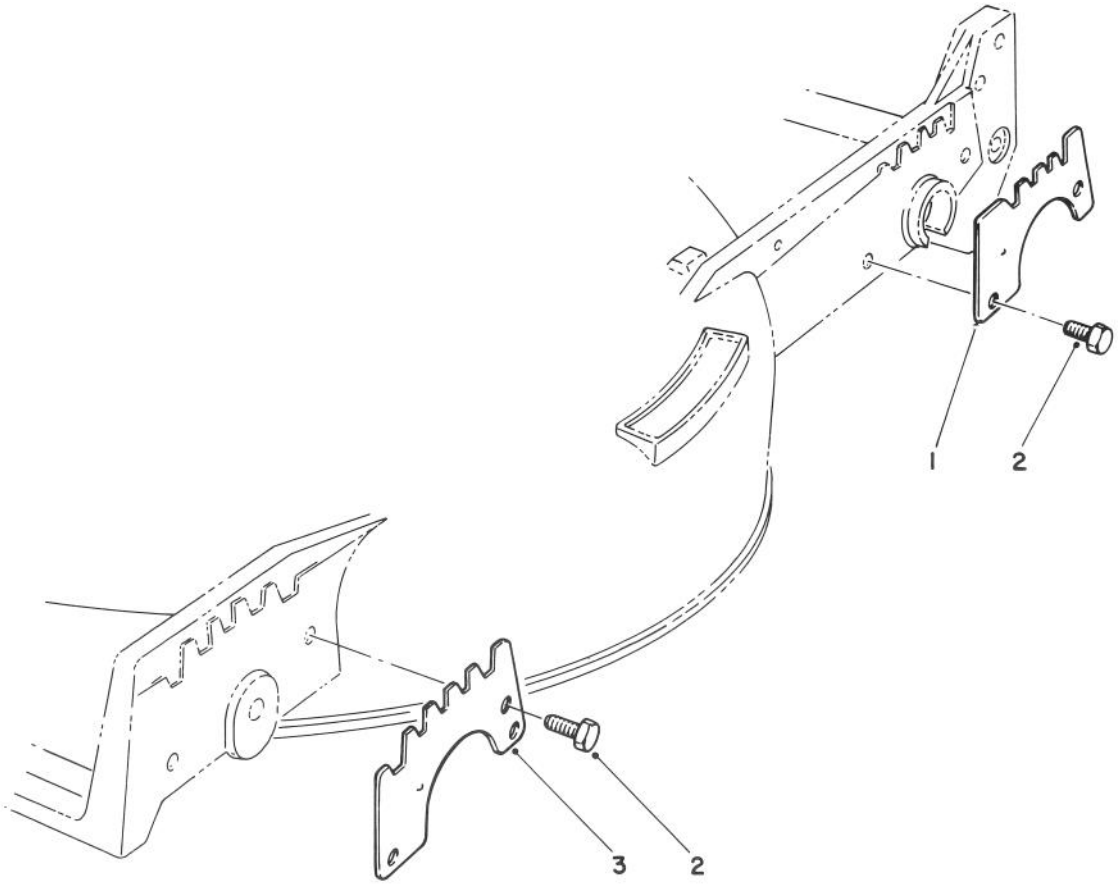

WEAR PLATE KIT NO. 49-4080 (Optional)

Ref. No.	Part No.	Description	No. Used
1	49-4070	Plate — Wear, Rear	2
2	32104-17	Screw — Thread Forming	8

Ref. No.	Part No.	Description	No. Used
3	43-5050	Plate — Wear, Front	2

ENGINE TECUMSEH MODEL NO. TVS90-43228D

(used on units with serial no. 6000101-6001100)

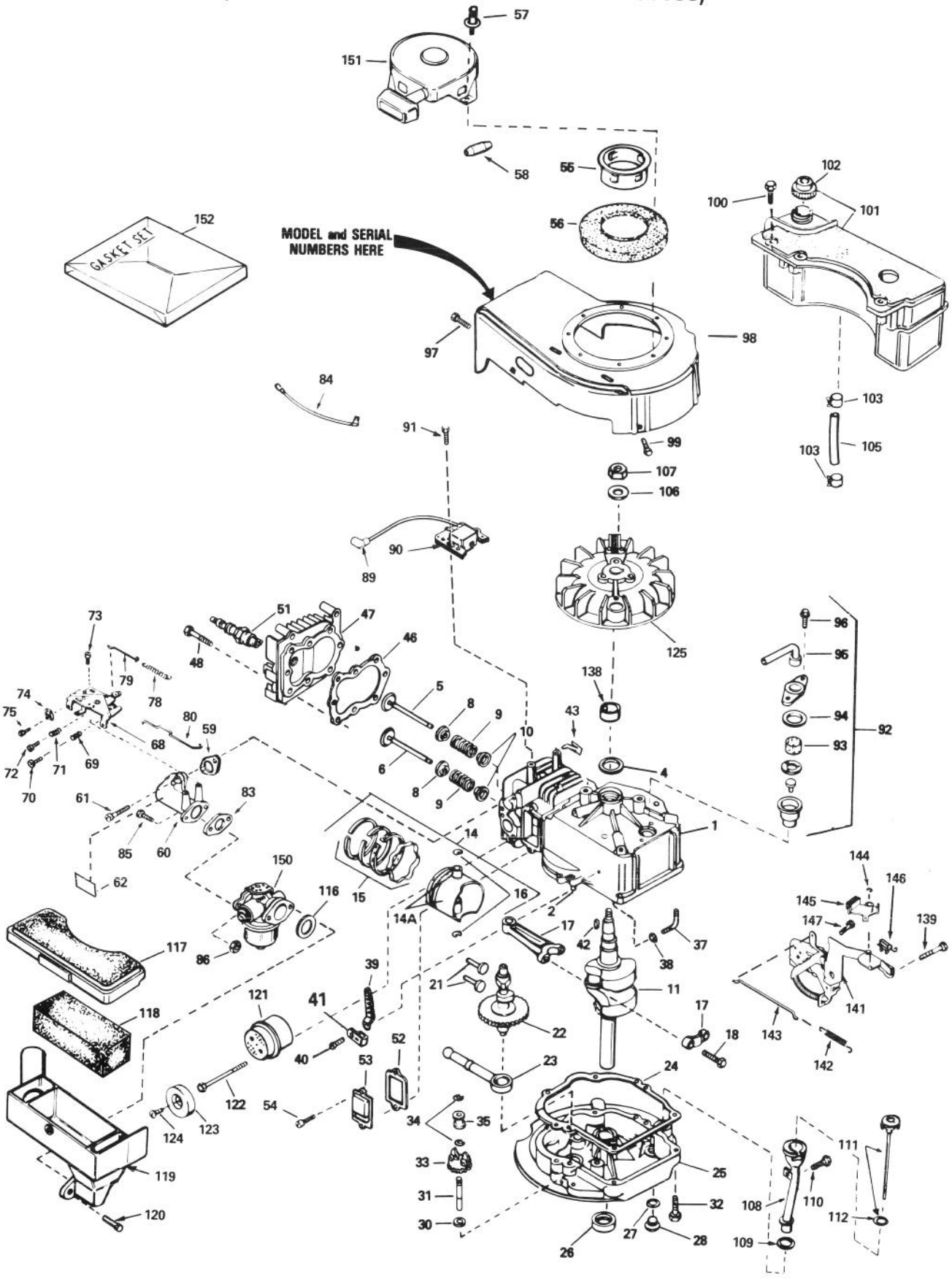

ENGINE TECUMSEH MODEL NO. TVS90-43228D

(used on units with serial no. 6000101-6001100)

Ref. No.	Part No.	Description	No. Used
1	34975	Cylinder Assy. (Incl. #2 & 4)	1
2	26727	Pin — Dowel	2
4	32600	Seal — Oil	1
5	29314B	Valve — Intake (Std.) (Incl. #10)	1
5	29315C	Valve — Intake (1/32" Oversize) (Incl. #10)	1
6	29313C	Valve — Exhaust (Std.) (Incl. #10)	1
6	29315C	Valve — Exhaust (1/32" Oversize) (Incl. #10)	1
8	31671	Cap — Upper Valve Spring	2
9	31672	Spring — Valve	2
10	31673	Cap — Lower Valve Spring	2
11	34440	Crankshaft	1
14	34514	Piston — Pin & Ring Assy. (Std.) (Incl. #14A, 15 & 16)	1
14	34515	Piston — Pin & Ring Assy. (.010 Oversize) (Incl. #14A, 15 & 16)	1
14	34516	Piston — Pin & Ring Assy. (.020 Oversize) (Incl. #14A, 15 & 16)	1
14A	32538B	Piston & Pin Assy. (Std.) (Incl. #16)	1
14A	32548B	Piston & Pin Assy. (.010 Oversize) (Incl. #16)	1
14A	32549B	Piston & Pin Assy. (.020 Oversize) (Incl. #16)	1
15	28986	Ring Set — Piston (Std.)	1
15	28987	Ring Set — Piston (.010 Oversize)	1
15	28988	Ring Set — Piston (.020 Oversize)	1
16	20381	Ring — Piston Pin Retaining	2
17	30963B	Rod Assy. — Connecting (Incl. #18)	1
18	32610A	Screw — Connecting Rod	2
21	27241	Lifter — Valve	2
22	33553	Camshaft (Mechanical Compression Release)	1
23	29914	Pump Assy. — Oil	1
24	*26750A	Gasket — Mounting Flange	1
25	34831	Flange Assy. — Mounting (Incl. #26, 27, 28 & 31)	1
26	26208	Seal — Oil	1
27	*28833	Gasket — Oil Drain Plug	1
28	27244	Plug — Oil Drain	1
30	30590A	Washer — Flat	1
31	30574	Shaft — Mechanical Governor	1
32	650488	Screw — Hex Hd.	6
33	30591	Gear Assy. — Governor (Incl. #30)	1
34	29193	Ring — Retaining	2
35	30588A	Spool — Governor	1
37	30589	Rod — Governor (Incl. #38)	1
38	28277	Washer — Flat	1
39	31383A	Lever — Governor	1
40	650548	Screw — Hex Washer Hd.	1
41	31335	Clamp — Governor Lever	1
42	611004	Key — Flywheel (Solid State)	1
43	29443	Clip — Spring	1
46	*29953B	Gasket — Cylinder Head	1
47	34335	Head — Cylinder	1
48	6021A	Screw — Hex Flange Hd.	8
51	35078	Plug — Spark (Autolite 458, Champion J-19LM or Equivalent	1
52	*27234	Gasket — Breather	1
53	32755	Cover — Valve Spring	1
54	650128	Screw — Fil. Hd.	2
55	34449	Hub — Starter	1
56	35009	Screen — Starter	1
57		Pop Rivet (Can Be Purchased Locally)	4
58	34985	Rope Stop & Staple Assy.	1
59	*34690	Gasket — Intake	1
60	31384A	Pipe — Intake (Incl. #59)	1
61	650451	Screw — Hex Hd.	2
62	34144	Decal — Primer	1
68	33131A	Control Assy. — Remote Speed (Incl. #69-72)	1
69	33802	Spring — Compression	1
70	650777	Screw — Fil. Hd.	1
71	31342	Spring — Compression	1
72	650549	Screw — Fil. Hd.	1
73	30200	Screw — Hex Washer Hd. Self-Tap	2
74	27793	Clip — Conduit	1
75	28942	Screw — Hex Washer Hd.	1
78	31361	Spring — Governor	1
79	34337	Link — Governor Spring	1
80	34336	Link — Governor-To-Throttle	1
83	*26756	Gasket — Carburetor	1
84	34961	Wire — Ground	1
85	6201	Screw — Hex Hd.	2
86	29752	Nut & Lockwasher	2
89	610118	Cover — Spark Plug	1
90	34443A	Lamination & Coil Assy. (Solid State) (Incl. #89)	1
91	650814	Screw — Hex Hd.	2
92	34214A	Breather Assy. (Incl. #93-96)	1
93	33734	Element — Breather	1
94	33735	Gasket — Breather	1
95	33886	Tube — Breather	1

*Indicates parts included in Gasket Set, Ref. #152.

ENGINE TECUMSEH MODEL NO. TVS90-43228D (Continued)

(used on units with serial no. 6000101-6001100)

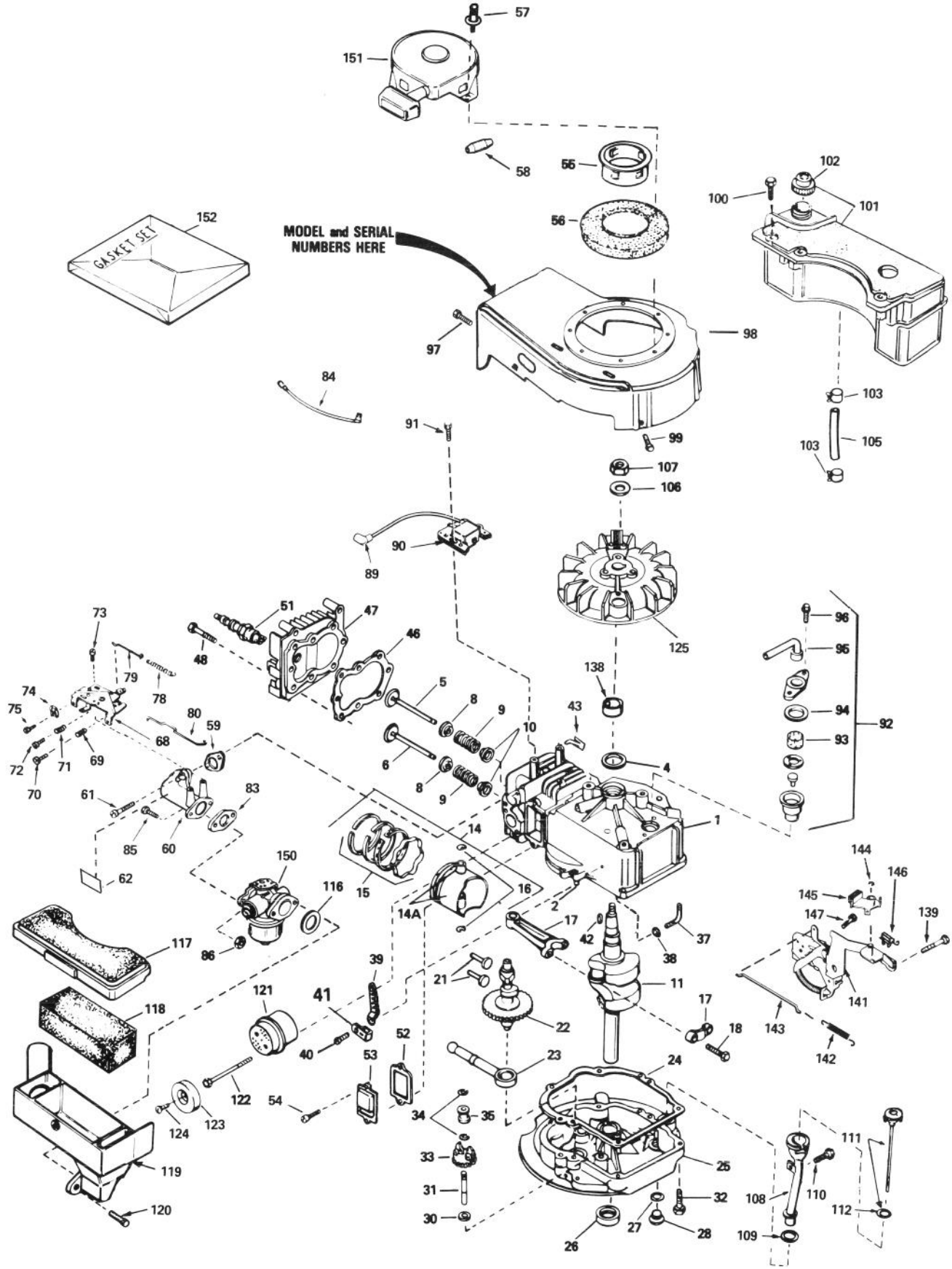

ENGINE TECUMSEH MODEL NO. TVS90-43228D (Continued)

(used on units with serial no. 6000101-6001100)

Ref. No.	Part No.	Description	No. Used
96	30200	Screw — Hex Washer Hd. Self-Tap	2
97	30200	Screw — Hex Washer Hd. Self-Tap	2
98	34936	Housing — Blower	1
99	650831	Screw — Hex Washer Hd. Powerlok Thread	2
100	28763	Screw — Hex Washer Hd.	3
101	34476	Tank Assy. — Fuel (Incl. #102)	1
102	33032	Cap — Fuel Tank	1
103	26460	Clamp — Fuel Line	2
105	34682	Line — Fuel	1
106	650815	Washer — Belleville	1
107	650816	Nut — Flywheel	1
108	34264	Tube — Oil Fill	1
109	34265	Gasket — Oil Fill Tube	1
110	650562	Screw — Hex Washer Hd.	1
111	34281	Dipstick — Oil (Incl. #112)	1
112	33590	"O" Ring	1
116	*34338	Gasket — Air Cleaner	1
117	34341	Cover — Air Cleaner	1
118	34340	Element — Air Cleaner	1
119	34858	Body — Air Cleaner	1
120	650806	Screw — Hex Washer Hd. Shoulder	2
121	27181B	Muffler (Incl. #122)	1
122	650795	Screw, Hex Hd.	2
123	32431	Cover — Muffler	1
124	650643	Screw — Pan Hd. Self-Tap	1
125	611046	Flywheel	1
138	34080	Spacer — Flywheel Key	1
139	650839	Screw — Hex Hd. Self-Tap	2
141	35015	Bracket Assy.	1
142	34965	Spring — Extension	1
143	34966	Link — Control	1
144	32309	Ring — Retaining	1
145	34968	Lever — Brake	1
146	610973	Terminal Assy.	1
147	650837	Screw — Hex Hd. E.T.	1
150	632098	Carburetor (Incl. #83)	1
151	590420A	Starter — Rewind	1
152	33238C	Gasket Set (Incl. Items Marked *)	1

*Indicates parts included in Gasket Set, Ref. #152.

ENGINE TECUMSEH MODEL NO. TVS100-44001

(used on units with serial no. 6001101 & up)

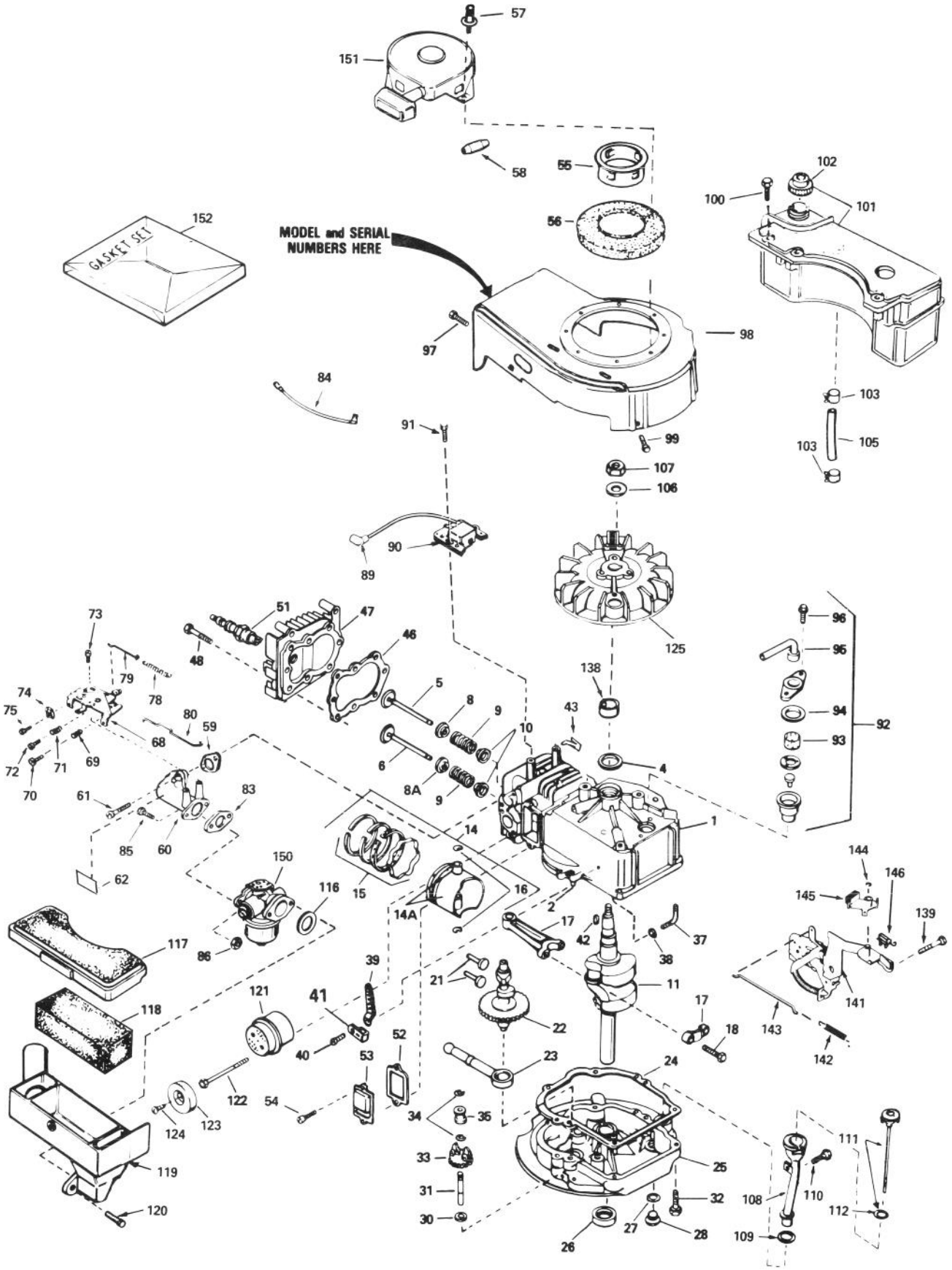

ENGINE TECUMSEH MODEL NO. TVS100-44001

(used on units with serial no. 6001101 & up)

Ref. No.	Part No.	Description	No. Used
1	35010	Cylinder Assembly (Incl. Ref. #2 & 4)	1
2	26727	Pin — Dowel	2
4	32600	Seal — Oil	1
5	29314B	Valve — Intake (Std.) (Incl. Ref. #10)	1
5	29315C	Valve — Intake (1/32" oversize) (Incl. Ref. #10)	1
6	29313C	Valve — Exhaust (Std.) (Incl. Ref. #10)	1
6	29315C	Valve — Exhaust (1/32" oversize) (Incl. Ref. No. 10)	1
8	35390	Seal Assembly — Intake Valve	1
8A	31671	Cap — Upper Valve Spring (Exhaust)	1
9	31672	Spring — Valve	2
10	31673	Cap — Lower Valve Spring	2
11	34440	Crankshaft	1
14	34851	Piston — Pin & Ring Assy. (Std.) (Incl. Ref. #14A, 15 & 16)	1
14	34852	Piston — Pin & Ring Assembly (.010 oversize) (Incl. Ref. #14A, 15 & 16)	1
14	34853	Piston — Pin & Ring Assembly (.020 oversize) (Incl. Ref. #14A, 15 & 16)	1
14A	32603B	Piston & Pin Assembly (Std.) (Incl. Ref. #16)	1
14A	32604B	Piston & Pin Assembly (.010 oversize) (Incl. Ref. #16)	1
14A	32605B	Piston & Pin Assembly (.020 oversize) (Incl. Ref. #16)	1
15	34854	Ring Set — Piston (Std.)	1
15	34855	Ring Set — Piston (.010 oversize)	1
15	34856	Ring Set — Piston (.020 oversize)	1
16	20381	Ring — Piston Pin Retaining	2
17	30963B	Rod Assembly — Connecting (Incl. Ref. #18)	1
18	32610A	Screw — Connecting Rod	2
21	27241	Lifter — Valve	2
22	33553	Camshaft (Mechanical Compression Release)	1
23	29914	Pump Assembly — Oil	1
24	*35261	Gasket — Mounting Flange	1
25	34831	Flange Assembly — Mounting (Incl. Ref. #26, 27, 28 & 31)	1
26	26208	Seal — Oil	1
27	*28833	Gasket — Oil Drain Plug	1
28	27244	Plug — Oil Drain	1
30	30590A	Washer — Flat	1
31	30574	Shaft — Mechanical Governor	1
32	650488	Screw — Hex Hd.	6

Ref. No.	Part No.	Description	No. Used
33	30591	Gear Assembly — Governor (Incl. Ref. #30)	1
34	29193	Ring — Retaining	2
35	30588A	Spool — Governor	1
37	30589	Rod — Governor (Incl. Ref. #38)	1
38	28277	Washer — Flat	1
39	31383A	Lever — Governor	1
40	650548	Screw — Hex Washer Hd.	1
41	31335	Clamp — Governor Lever	1
42	611004	Key — Flywheel (Solid State)	1
43	29443	Clip — Spring	1
46	*33015	Gasket — Cylinder Head	1
47	34342	Head — Cylinder	1
48	6021A	Screw — Hex Flange Hd.	8
51	35078	Plug — Spark (Autolite 458, Champion J-19LM or equivalent)	1
52	*27234	Gasket — Breather	1
53	32755	Cover — Valve Spring	1
54	650128	Screw — Fil. Hd.	2
55	34449	Hub — Starter	1
56	35009	Screen — Starter	1
57		Pop Rivet (Can be purchased locally)	1
58	34985	Rope Stop & Staple Assembly	1
59	*34690	Gasket — Intake Pipe	1
60	31384A	Pipe — Intake (Incl. Ref. #59)	1
61	650451	Screw — Hex Hd.	2
62	34144	Decal — Primer	1
68	33131A	Control Assy. — Remote Speed (Incl. Ref. #69 thru 72)	1
69	33802	Spring — Compression	1
70	650777	Screw — Fil. Hd.	1
71	31342	Spring — Compression	1
72	650549	Screw — Fil. Hd.	1
73	30200	Screw — Hex Washer Hd. Self-Tap.	2
74	27793	Clip — Conduit	1
75	28942	Screw — Hex Washer Hd.	1
78	31361	Spring — Governor	1
79	34337	Link — Governor Spring	1
80	34336	Link — Governor-to-Throttle	1
83	*26756	Gasket — Carburetor	1
84	34961	Wire — Ground	1
85	6201	Screw — Hex Hd.	2
86	29752	Nut & Lockwasher	2
89	610118	Cover — Spark Plug	1
90	34443A	Solid State Assembly	1
91	650814	Screw — Hex Hd.	2
92	34214A	Breather Assembly (Incl. Ref. #93 thru 96)	1
93	33734	Element — Breather	1
94	*33735	Gasket — Breather	1
95	33886	Tube — Breather	1

*Indicates parts included in Gasket Set, Ref. #152.

ENGINE TECUMSEH MODEL NO. TVS100-44001 (Continued)

(used on units with serial no. 6001101 & up)

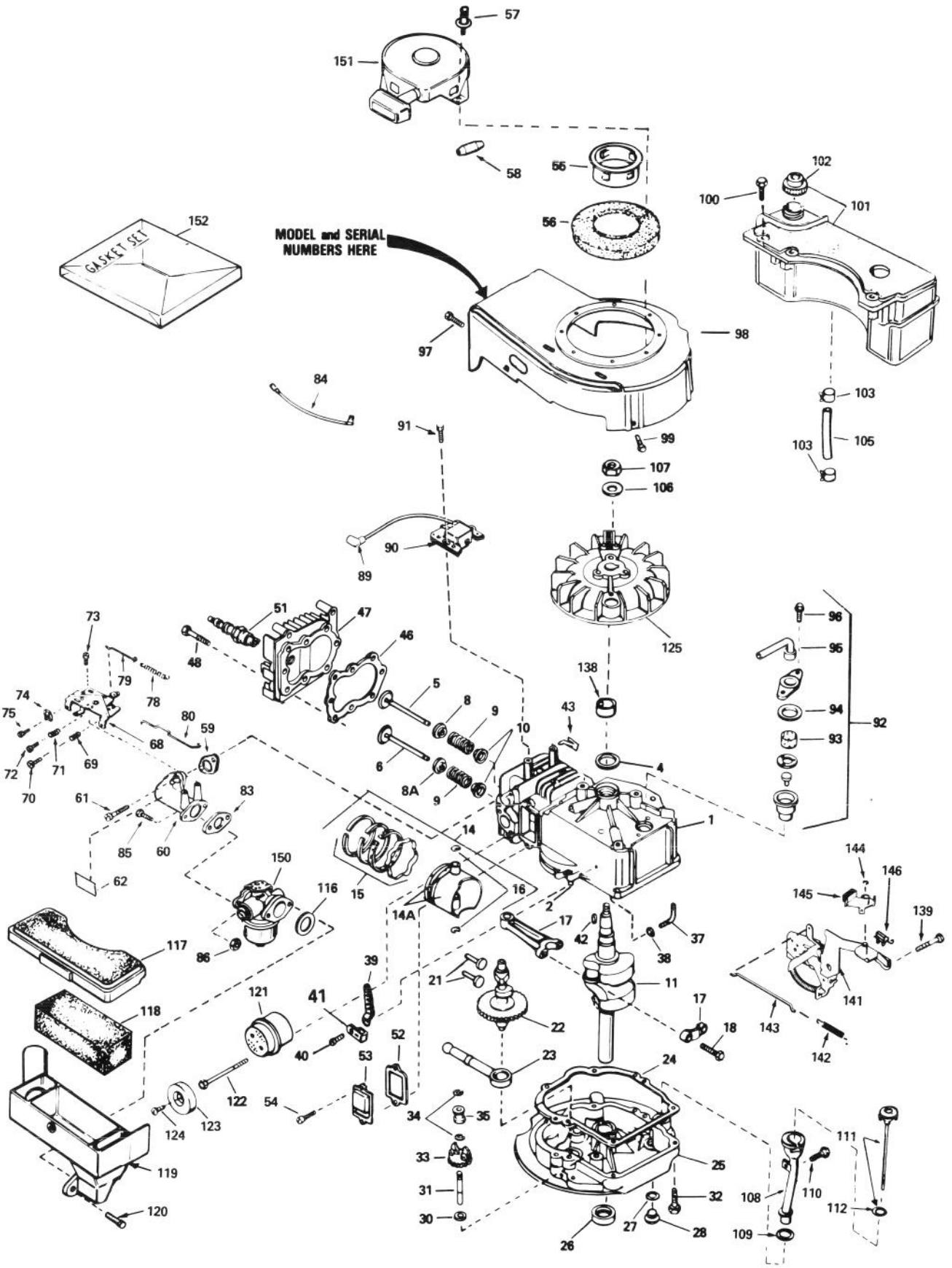

ENGINE TECUMSEH MODEL NO. TVS100-44001 (Continued)

(used on units with serial no. 6001101 & up)

Ref. No.	Part No.	Description	No. Used
96	30200	Screw — Hex Washer Hd. Self-Tap.	2
97	30200	Screw — Hex Washer Hd. Self-Tap.	2
98	34936	Housing — Blower	1
99	650831	Screw — Hex Washer Hd. Power Lok Thread	2
100	28763	Screw — Hex Washer Hd.	3
101	34476	Tank Assembly — Fuel (Incl. Ref. #102)	1
102	33032	Cap — Fuel Tank	1
103	26460	Clamp — Fuel Line	2
105	30705	Line — Fuel	1
106	650815	Washer — Belleville	1
107	650816	Nut — Flywheel	1
108	34264	Tube — Oil Fill	1
109	34265	Gasket — Oil Fill Tube	1
110	650562	Screw — Hex Washer Hd.	1
111	34281	Dipstick — Oil (Incl. Ref. #112)	1
112	33590	"O" Ring	1
116	*34338	Gasket — Air Cleaner	1
117	34341	Cover — Air Cleaner	1

Ref. No.	Part No.	Description	No. Used
118	34340	Element — Air Cleaner	1
119	34858	Body — Air Cleaner	1
120	650806	Screw — Hex Washer Hd. Shoulder	2
121	27181B	Muffler (Incl. Ref. #122)	1
122	650795	Screw — Hex Hd.	2
123	32431	Cover — Muffler	1
124	650643	Screw — Pan Hd. Self-Tap.	1
125	611046A	Flywheel	1
138	34080	Spacer — Flywheel Key	1
139	650839	Screw — Hex Hd. Self-Tap.	2
141	35015	Bracket Assembly — Brake	1
142	34965	Spring — Extension	1
143	34966	Link — Control	1
144	32309	Ring — Retaining	1
145	34968	Lever — Brake	1
146	610973	Terminal Assembly	1
150	632098	Carburetor (Inc. Ref. #83)	1
151	590420A	Starter — Rewind	1
152	33238C	Gasket Set (Incl. Items Marked *)	1

*Indicates parts included in Gasket Set, Ref. #152.

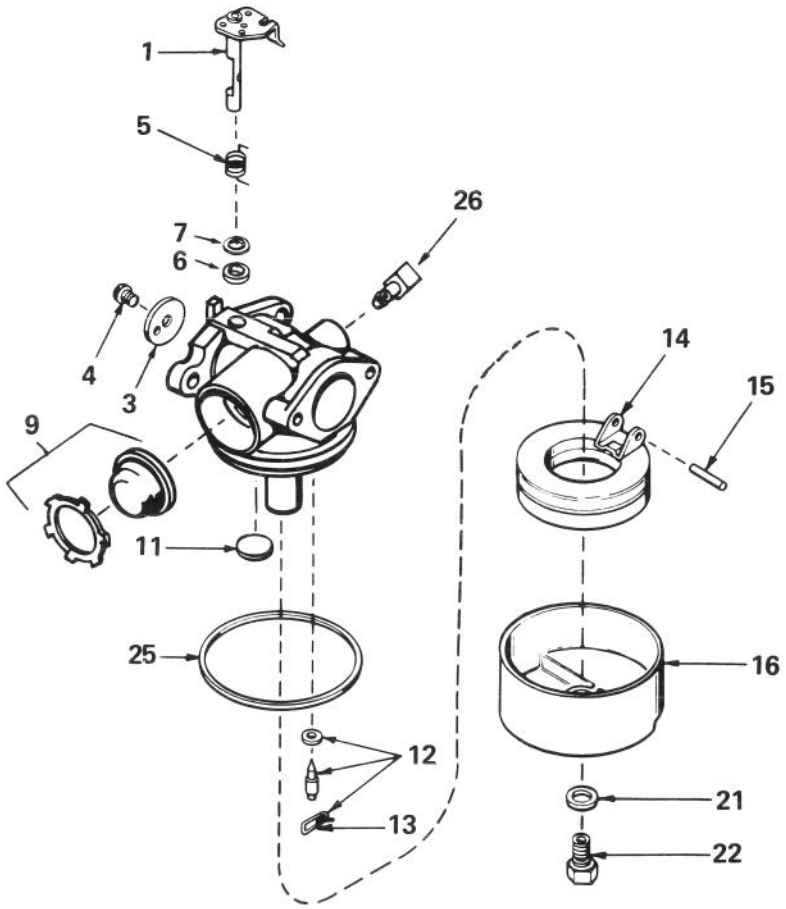

CARBURETOR NO. 632098

Ref. No.	Part No.	Description	No. Used
1	631615	Shaft & Lever Assy., Throttle	1
3	631616	Shutter — Throttle	1
4	650506	Screw — Throttle Shutter	1
5	631767	Spring — Throttle Return	1
6	631971	Seal — Dust	1
7	631184	Washer — Flat	1
9	632047	Primer Assembly	1
11	631027	Plug — Welch	1
12	631021	Inlet Needle — Seat & Clip Assy. (Incl. Ref. #13)	1

Ref. No.	Part No.	Description	No. Used
13	631022	Clip — Inlet Needle	1
14	632019	Float — Carburetor	1
15	631024	Shaft — Float	1
16	631700	Bowl — Float	1
21	631334	Gasket — Bowl-To-Body	1
22	631937	Nut — Float Bowl	1
25	631028	Gasket — Bowl-To-Body	1
26	631807	Fitting — Fuel Inlet	1

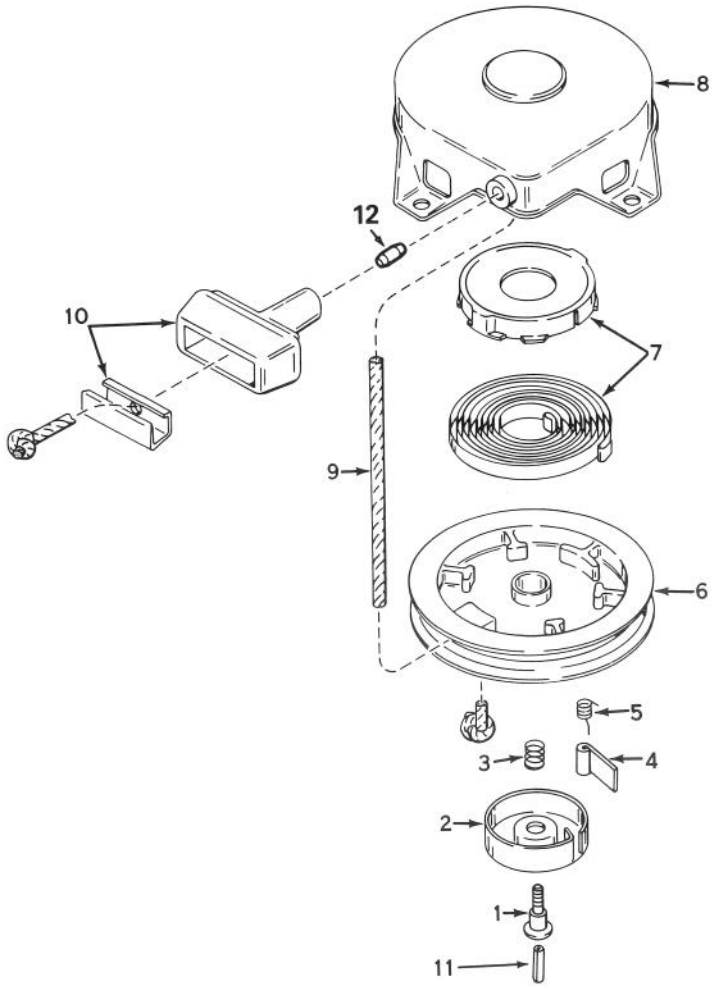

REWIND STARTER NO. 590420A

Ref. No.	Part No.	Description	No. Used
1	590409A	Screw — Retainer	1
2	590410	Retainer — R.H.	1
3	590411	Spring — Brake	1
4	590148	Dog — Starter	1
5	590412	Spring — R.H. Dog	1
6	590413A	Pulley	1
7	590414	Spring & Keeper Assy.	1

Ref. No.	Part No.	Description	No. Used
8	590536	Housing Assy. — Starter (Incl. #1)	1
9	590535	Rope — Starter	1
10	590387	Handle Assy. — Starter	1
11	590459	Pin — Centering	1
12	34985	Stop & Staple — Rope (Not used on all models)	1

PRODUCT CHANGES

In an effort to make improvements available to TORO owners as quickly as possible, minor changes are incorporated into Toro's products from time to time that do not become immediately shown in the Parts Catalog. If such a change apparently has been made in your unit, which is not reflected in your manual, see your TORO Distributor or his Authorized TORO Service Dealer for information and part numbers.

IDENTIFICATION AND ORDERING

MODEL AND SERIAL NUMBERS

The Mower has two identification numbers: a model number and a serial number. The two numbers are stamped on a decal which is located on the mower housing between the rear wheels. In any correspondence concerning the mower, supply model and serial numbers to assure that correct information and replacement parts are obtained.

To order replacement parts from an Authorized TORO Service Dealer, supply the following information:

1. Model and serial numbers of the mower.
2. Part number, description, and quantity of part(s) desired.

Note: Do not order by reference number if a parts catalog is being used; use the PART NUMBER.

The Toro Promise

A Two Year Limited Warranty

On All

Gasoline Powered Consumer Products

The Toro Company promises to repair your TORO Product if defective in materials or workmanship. The following time periods from the date of purchase apply:

Residential Product ..... 2 Years
Residential Products Used Commercially ..... 45 Days

The costs of parts and labor are included, but the customer pays the transportation costs. Just return any residential product to an Authorized TORO Service Dealer or TORO Distributor.

Should you feel your TORO Product is defective and wish to rely on The Toro Promise, the following procedure is recommended:

1. Contact any Authorized TORO Service Dealer, TORO Master Service Dealer, or TORO Distributor (the Yellow Pages of your telephone directory is a good reference source).
2. He will either instruct you to return the product to him or recommend another Authorized TORO Service outlet which might be more convenient.
3. Bring the product along with your original sales slip, or other evidence of purchase date, to the service dealer.
4. The servicing dealer will inspect the unit, advise you whether the product is defective and, if so, make all repairs necessary to correct the defect without extra charge to you.

If for any reason you are dissatisfied with the dealer's analysis of the defect or the service performed, you may contact us.

Write:

TORO Consumer Service Department
8111 Lyndale Avenue South
Minneapolis, Minnesota 55420

The above remedy of product defects through repair by an Authorized TORO Service Dealer is the purchaser's sole remedy for any defect.

THERE IS NO OTHER EXPRESS WARRANTY. ALL IMPLIED WARRANTIES OF MERCHANTABILITY AND FITNESS FOR USE ARE LIMITED TO THE DURATION OF THE EXPRESS WARRANTY.

Some states do not allow limitations on how long an implied warranty lasts, so the above limitation may not apply to you.

This warranty applies only to parts or components which are defective and does not cover repairs necessary due to normal wear, misuse, accidents, or lack of proper maintenance. Regular, routine maintenance of the unit to keep it in proper operating condition is the responsibility of the owner.

All warranty repairs reimbursable under The Toro Promise must be performed by an Authorized TORO Service Dealer using Toro approved replacement parts.

Repairs or attempted repairs by anyone other than an Authorized TORO Service Account are not reimbursable under The Toro Promise. In addition, these unauthorized repair attempts may result in additional malfunctions, the correction of which is not covered by warranty.

THE TORO COMPANY IS NOT LIABLE FOR INDIRECT, INCIDENTAL OR CONSEQUENTIAL DAMAGES IN CONNECTION WITH THE USE OF THE PRODUCT INCLUDING ANY COST OR EXPENSE OF PROVIDING SUBSTITUTE EQUIPMENT OR SERVICE DURING PERIODS OF MALFUNCTION OR NON-USE.

Some states do not allow the exclusion or limitation of incidental or consequential damages, so the above limitation or exclusion may not apply to you.

This warranty gives you specific legal rights, and you may also have other rights which vary from state to state.

COUNTRIES OTHER THAN THE UNITED STATES OR CANADA

Customers who have purchased TORO products exported from the United States or Canada should contact their TORO Distributor (Dealer) to obtain guarantee policies for your country, province or state. If for any reason you are dissatisfied with your Distributor's service or have difficulty obtaining guarantee information, contact the TORO importer. If all other remedies fail, you may contact us at The Toro Company.

Compliance with Radio Interference Regulations Certified.
Certifie Conforme au Reglement sur le Brouillage Radioelectrique.

MAINTENANCE RECORD

Date	Hours Used	Oil Change	Air Cleaner Service	Lubrication	Winter Storage	Spring Service	Spark Plug Gap

MAINTENANCE RECORD

Date	Hours Used	Oil Change	Air Cleaner Service	Lubrication	Winter Storage	Spring Service	Spark Plug Gap

LTS-602262