FORM NO. 3312-859

TORO®

MODEL NO. 20584-6000001 & UP

PARTS CATALOG

21" H.P. REAR BAGGER

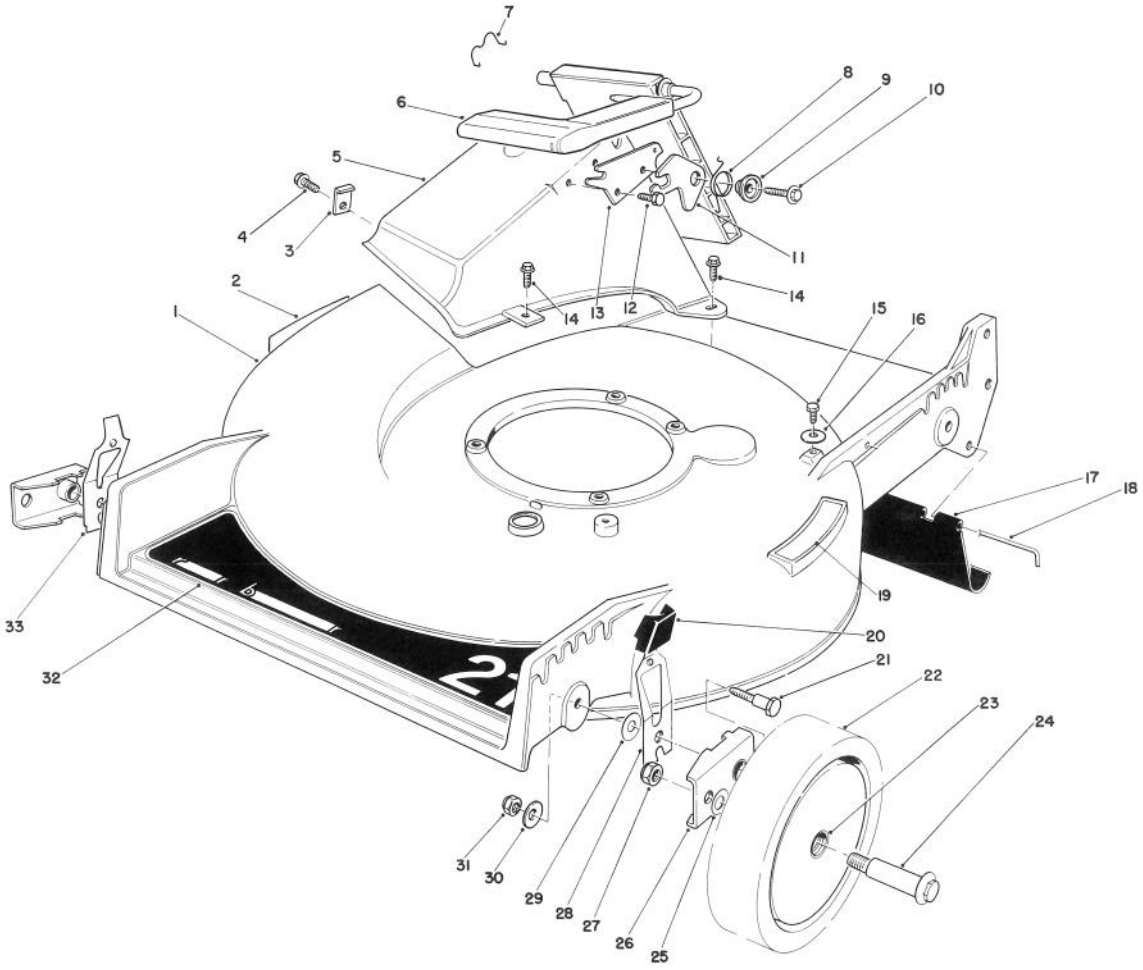

HOUSING ASSEMBLY

Ref. No.	Part No.	Description	No. Used
1	11-4079	Housing — 21" (Incl. Ref. #2 & 19)	1
2	43-8480	Decal — Danger	1
3	47-6540	Clip — Tunnel	1
4	12-3270	Screw — Self Tapping	1
5	46-3500	Tunnel — Discharge	1
6	51-0200	Discharge Door Assembly	1
7	47-5840	Retainer — Door	1
8	33-4860	Spring — Torsion	1
9	43-4840	Spacer — Latch	1
10	46-8091	Screw — Self Tapping, Hex Washer Hd.	1
11	42-4010	Latch — Safety	1

Ref. No.	Part No.	Description	No. Used
12	46-8090	Screw — Self Tapping, Hex Washer Hd.	1
13	23-1040	Plate — Latch	1
14	46-6811	Screw & Washer Assembly	3
15	32144-11	Screw — Self Tapping, Hex Washer Hd.	1
16	46-5610	Clamp — Cable	1
17	44-0580	Shield — Rear	1
18	33-3208	Rod — Shield	1
19	46-7370	Decal — Step Pad	1
20	25-7740	Knob — Arm	4
21	44-5270	Screw — Pivot	4
22	11-9509	Wheel & Tire Assembly (Incl. Ref. #23)	4

© The Toro Company — 1986

PRICE $1.00

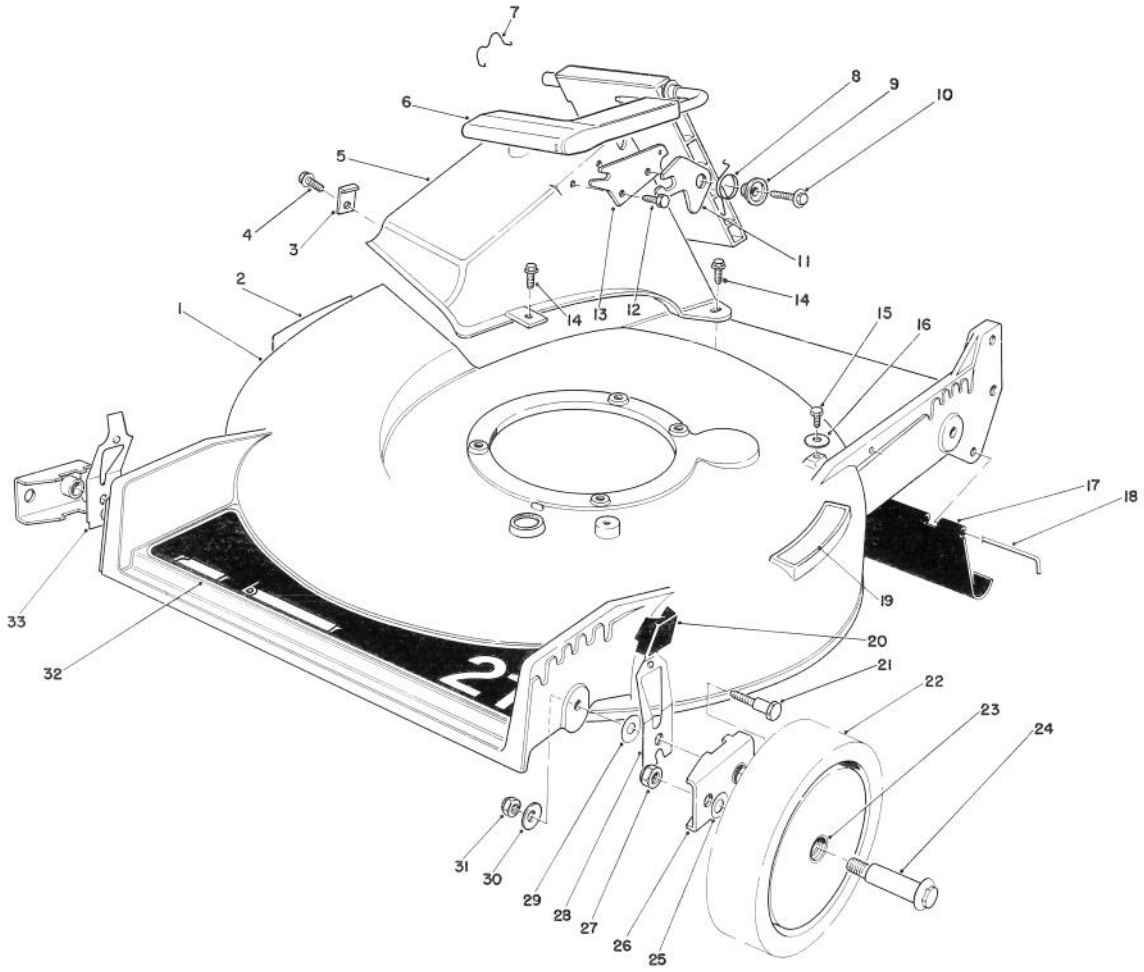

HOUSING ASSEMBLY

Ref. No.	Part No.	Description	No. Used
23	27-6250	Bushing — Wheel	8
24	27-6230	Bolt — Wheel	4
25	40-1940	Washer — Wheel	4
26	47-2940	Pivot Arm Assembly	4
27	52-3620	Locknut	4
28	52-7480	Spring Arm Assembly L.H.	2

Ref. No.	Part No.	Description	No. Used
29	5-4460	Washer — Pivot	4
30	3290-456	Washer — Belleville	4
31	3296-29	Locknut	4
32	44-0450	Decal — 21" Rear Bagger	1
33	52-7490	Spring Arm Assembly R.H.	1

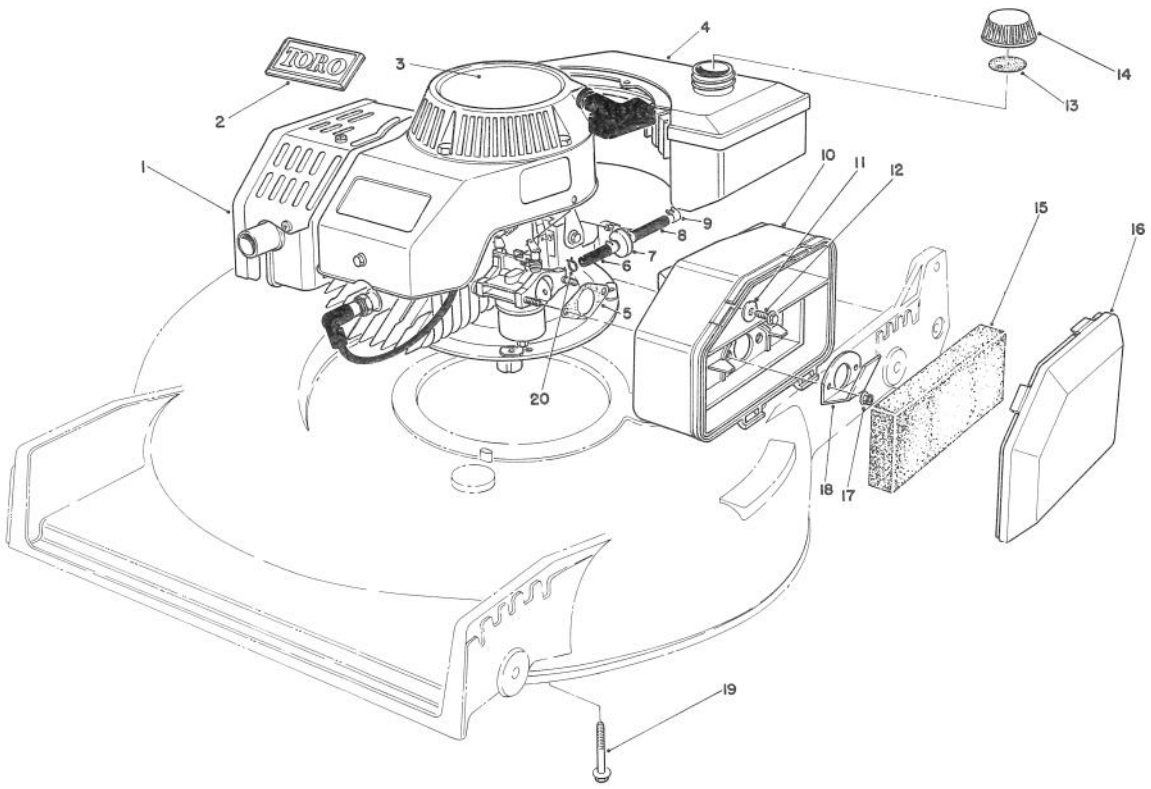

ENGINE ASSEMBLY

Ref. No.	Part No.	Description	No. Used
1	59250	Engine	1
2	46-8290	Plate — Logo, Toro	1
3	57-9870	Decal — Recoil	1
4	81-0041	Fuel Tank Assembly	1
5	81-0090	Gasket — Air Cleaner	1
6	51-3215	Line — Fuel	1
7	56-6360	Filter — Fuel	1
8	51-3216	Line — Fuel	1
9	2412-95	Clamp — Fuel Line	3
10	81-0110	Air Cleaner	1
11	3256-16	Washer — Flat	1

Ref. No.	Part No.	Description	No. Used
12	51-2690	Screw — Hex Washer Hd.	1
13	20-4620	Gasket — Gas Cap	1
14	42-0681	Gas Cap Assembly (Incl. Ref. #13)	1
15	81-0100	Foam Element — Air Cleaner	1
16	81-0120	Cover — Air Cleaner	1
17	49-7810	Locknut	2
18	81-0140	Deflector — Spitback	1
19	3234-11	Screw — Hex Flange Hd.	4
20	2412-80	Clamp — Fuel Line	1

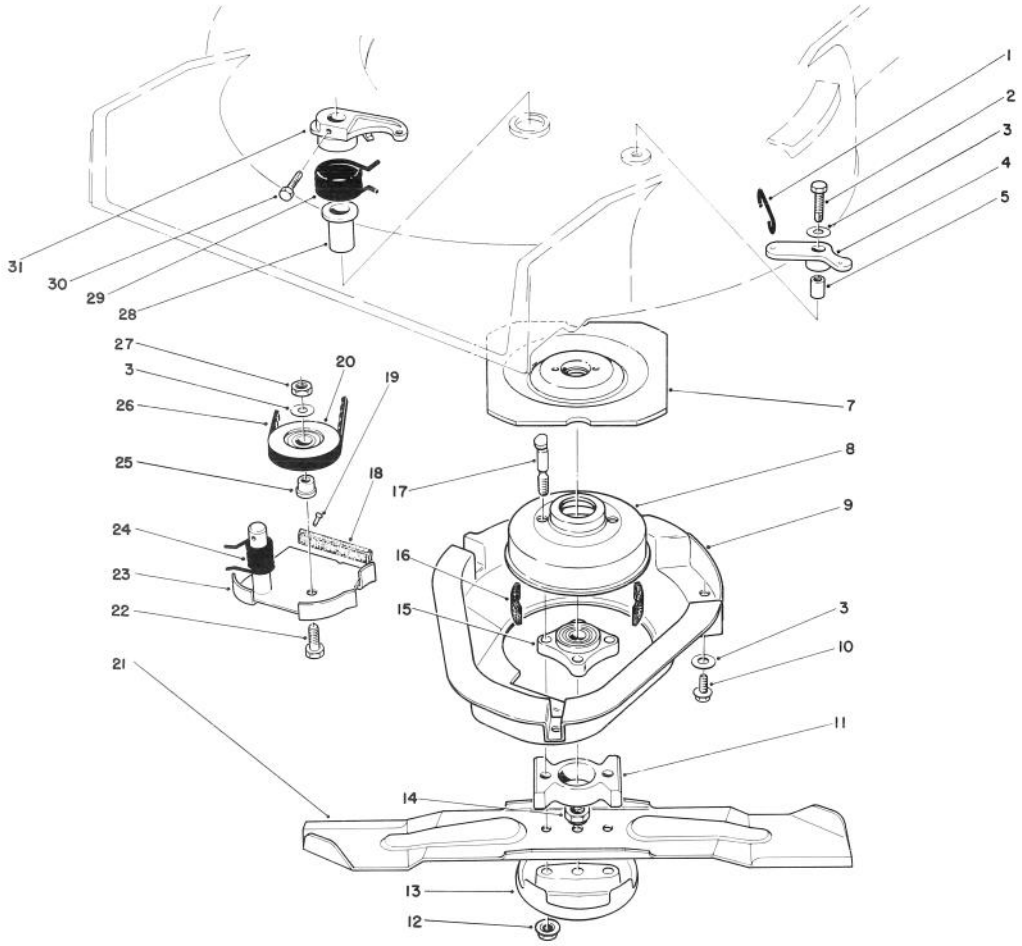

BLADE BRAKE CLUTCH ASSEMBLY

Ref. No.	Part No.	Description	No. Used
1	49-2810	Link — Control	1
2	32104-107	Screw — Self Tapping Hex Hd.	1
3	3256-23	Washer — Plain	5
4	49-7960	Bell Crank	1
5	49-7950	Sleeve — Bell Crank	1
7	56-6160	Flywheel	1
8	56-6170	Drum — Brake	1
9	46-5691	Shield	1
10	32144-11	Screw — Thread Forming Hex Washer Hd.	3
11	42-6760	Spacer — Blade	1
12	54-9190	Nut — Lock	2
13	42-0910	Cup — Anti Scalp	1
14	3296-33	Nut — Lock	1
15	42-6890	Hub Assembly	1
16	52-3480	Dampener — Vibration	2

Ref. No.	Part No.	Description	No. Used
17	42-3190	Bolt — Blade	2
18	42-0890	Pad — Brake	1
19	3295-23	Rivet — Semi Tubular	2
20	46-5650	Pulley Idler	1
21	42-1000	Blade 21"	1
22	322-16	Capscrew	1
23	49-7920	Brake Plate (Incl. Ref. #18 & 19)	1
24	46-5670	Spring — Torsion Lower	1
25	46-5630	Hub — Idler Pulley	1
26	42-0883	V-Belt	1
27	3296-47	Nut — Lock	1
28	46-6680	Bushing — Flanged	1
29	49-7970	Spring — Torsion Upper	1
30	32104-96	Screw — Self Tapping Hex Hd.	1
31	49-2820	Lever	1

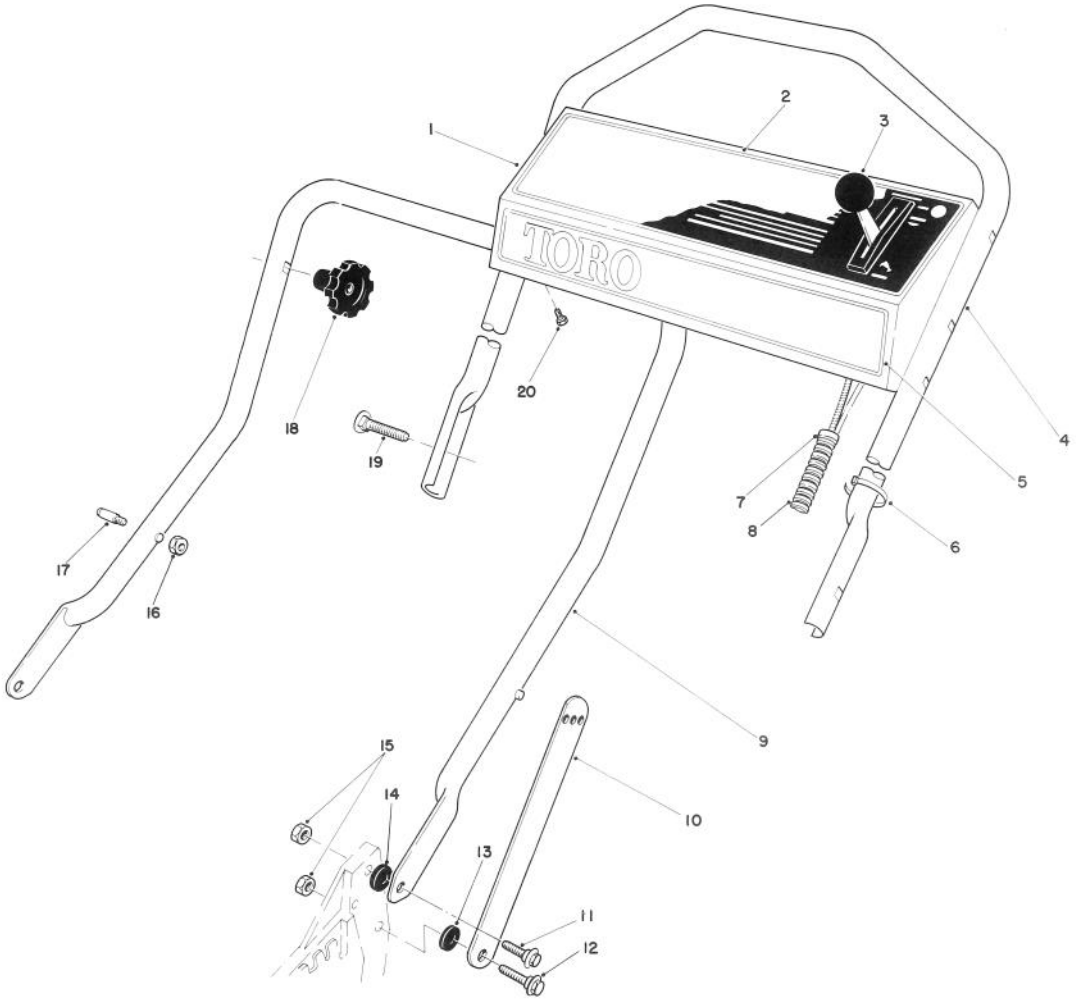

HANDLE ASSEMBLY

Ref. No.	Part No.	Description	No. Used
1	11-6779	Panel — Control (Incl. Ref. #2)	1
2	49-3070	Decal — Instruction Panel	1
3	46-6040	Control — Throttle	
		(Bend Type #2)	
		(Sheath Lg. 54¼ inch)	
		(Wire Lg. 2½ inch)	1
4	46-5411	Handle — Upper	1
5	46-7380	Decal — Toro Panel	1
6	3290-278	Cable Tie	1
7	2412-50	Clip — Convoluted Tubing	4
8	46-6442	Cover — Control Cables	1
9	43-1361	Lower Handle Assembly	1

Ref. No.	Part No.	Description	No. Used
10	43-1370	Latch — Handle	2
11	27-7211	Screw — Shoulder	2
12	27-7210	Screw — Shoulder	2
13	3-3287	Spacer — Handle Latch	2
14	55-8060	Spacer	2
15	3296-29	Nut — Lock	4
16†	3296-47	Nut — Lock	2
17†	49-2750	Pin — Handle	2
18	19-4050	Knob — Handle Release	2
19	17-9421	Screw — Handle	2
20	32104-76	Screw — Self Tapping Slotted	4

†Service Replacement Parts.

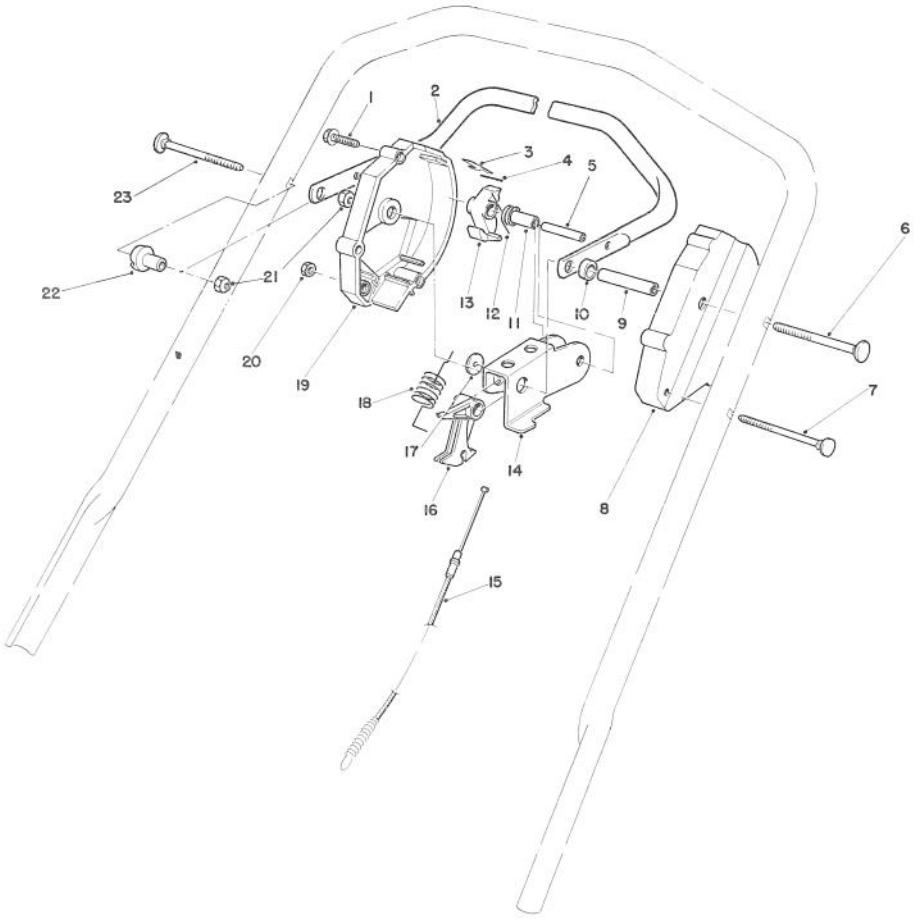

CONTROL ASSEMBLY

Ref. No.	Part No.	Description	No. Used
1	46-7040	Screw — Thread Forming Hex Washer Hd.	3
2	52-7430	Control Bar Assembly	1
3	52-7410	Spring — Leaf	1
4	57-6290	Pin — Insert	1
5	32121-9	Pin — Roll	1
6	17-9422	Screw — Handle	1
7	46-6431	Screw — Handle	1
8	46-5460	Housing — Control L.H.	1
9	46-5590	Spacer	1
10	256-276	Spacer	1
11	46-550	Bushing — P.M.	1

Ref. No.	Part No.	Description	No. Used
12	46-5510	Spring — Torsion	1
13	46-5530	Hook — Control	1
14	46-5490	Rocker	1
15	46-5470	Cable — Clutch	1
16	46-5540	Lever — Cable	1
17	46-5600	Washer — Nylon	1
18	49-8020	Spring — Detent	1
19	46-5450	Housing — Control R.H.	1
20	3296-42	Locknut	1
21	3296-58	Locknut	2
22	49-1630	Support — Spacer	1
23	17-9421	Screw — Handle	1

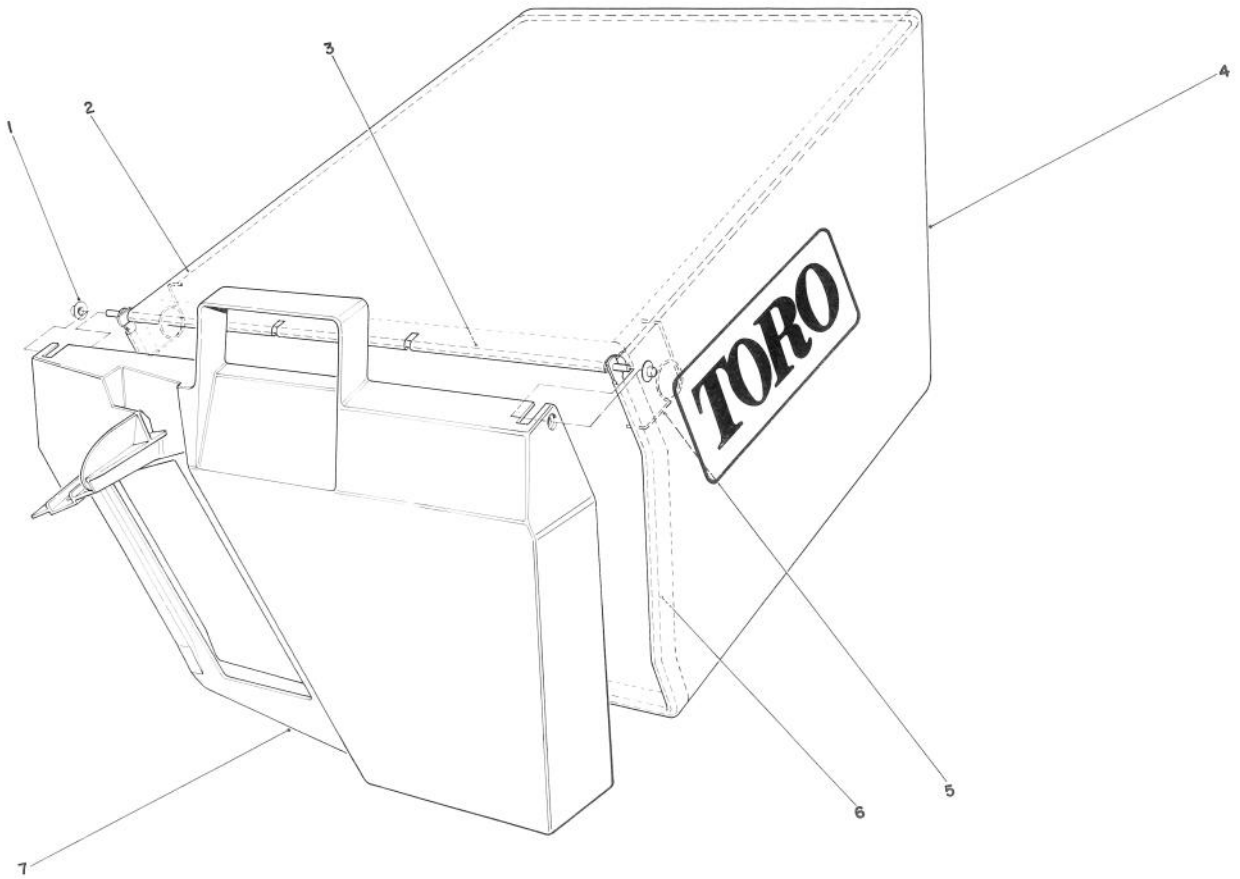

GRASS BAG ASSEMBLY NO. 11-0159

Ref. No.	Part No.	Description	No. Used
1	3290-422	Push Nut	2
2	42-4030	Bag Frame Upper	1
3	33-4820	Hinge Bag Door	1
4	8-2759	Grass Bag	1

Ref. No.	Part No.	Description	No. Used
5	36-6910	Spring	2
6	43-0030	Frame Bag	1
7	36-1331	Door Grass Bag	1

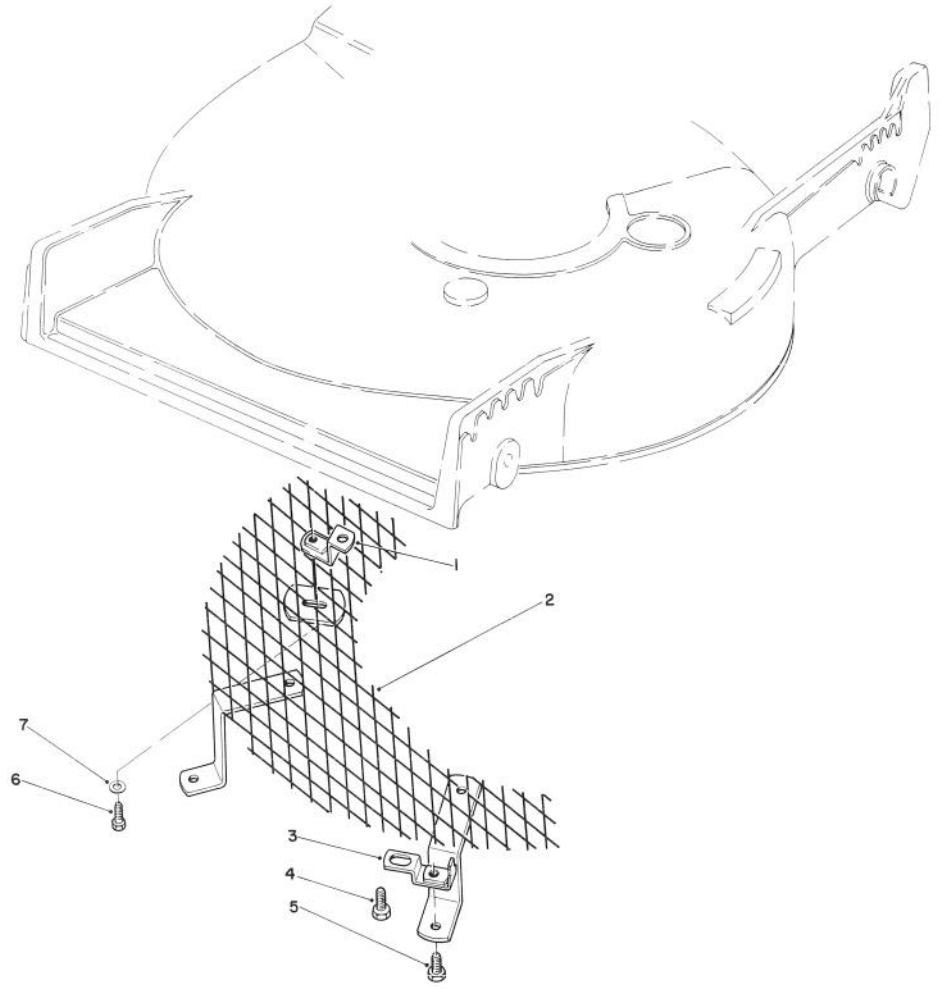

LEAF SHREDDER KIT MODEL NO. 59157 (Optional)

Ref. No.	Part No.	Description	No. Used
1	47-6260	Bracket	1
2	47-6230	Screen	1
3	46-4880	Mounting Bracket	2
4	32144-11	Screw — Self Tapping	2

Ref. No.	Part No.	Description	Ref. No.
5	321-3	Capscrew, Hex Hd.	2
6	321-5	Capscrew, Hex Hd.	1
7	3256-1	Washer	1

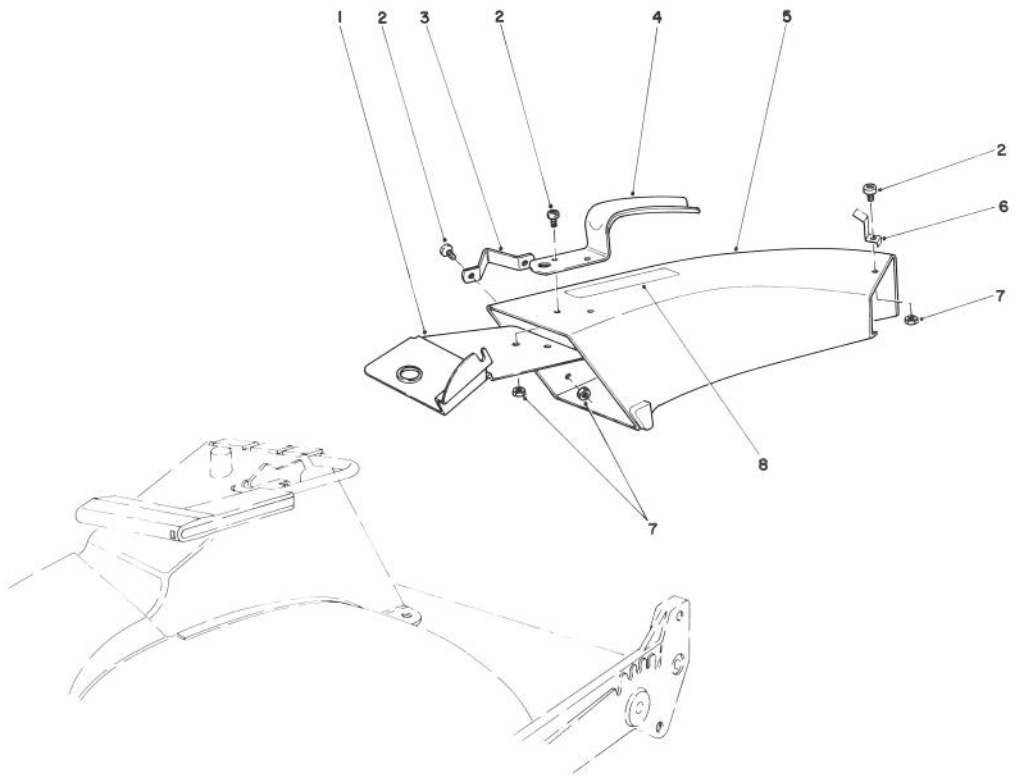

SIDE DISCHARGE CHUTE MODEL NO. 59108 (Optional)

Ref. No.	Part No.	Description	No. Used
1	44-2330	Plate — Discharge Chute	1
2	3251-3	Screw	5
3	46-6580	Bracket — Side	1
4	42-1340	Handle — Grass Chute	1
5	11-7149	Chute — Discharge (Incl. Ref. #8)	1

Ref. No.	Part No.	Description	No. Used
6	49-2630	Clip — Cable Stop	1
7	3296-12	Locknut	5
8	39-9120	Decal — Caution	1

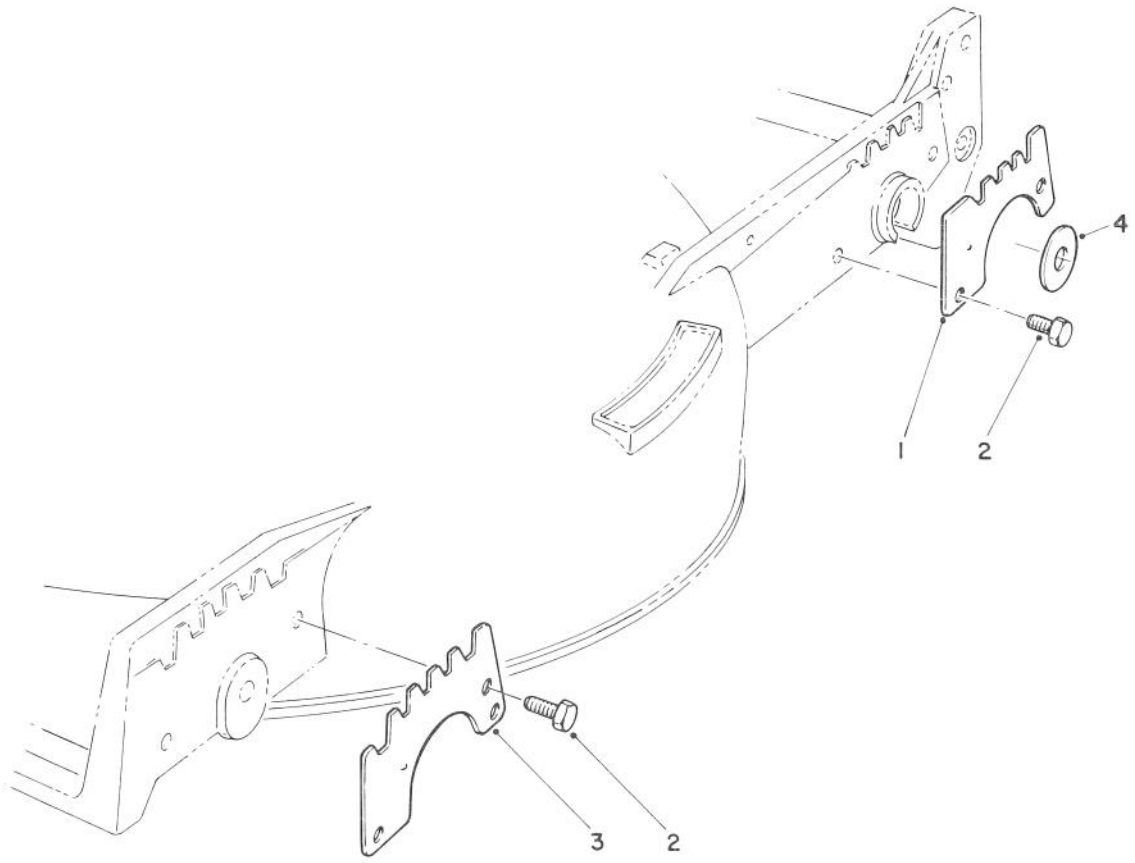

WEAR PLATE KIT NO. 49-4080 (Optional)

Ref. No.	Part No.	Description	No. Used
1	49-4070	Plate — Wear, Rear	2
2	32104-17	Screw — Thread Forming	8

Ref. No.	Part No.	Description	No. Used
3	43-5050	Plate — Wear, Front	2
4	33-0390	Washer	2

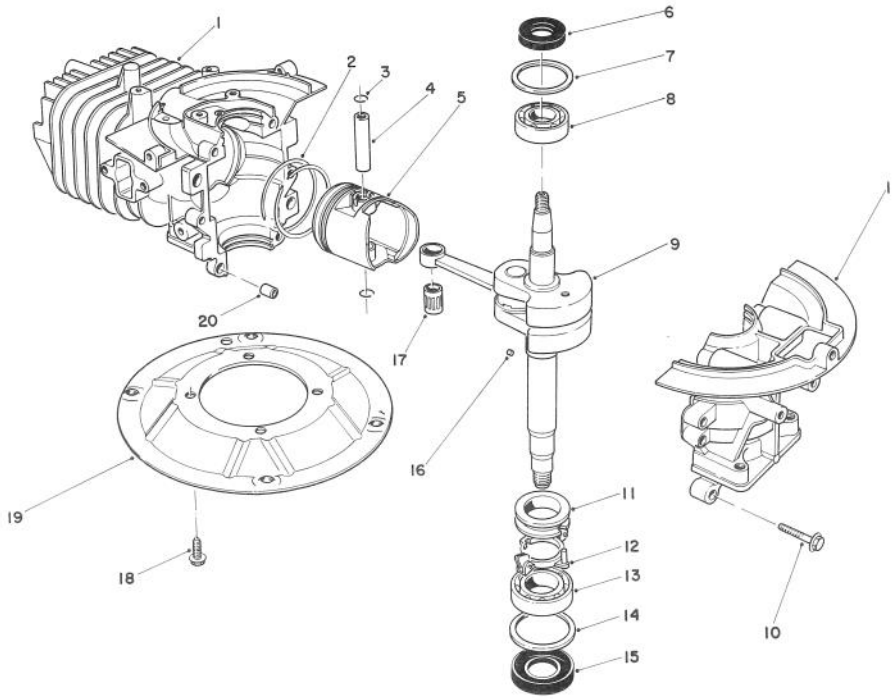

CRANKSHAFT ASSEMBLY

Ref. No.	Part No.	Description	No. Used
1	81-2800	Crankcase/Cylinder Assy.	1
2	81-0590	Ring Set	1
3	81-0620	Circlip	2
4	81-0600	Wrist Pin	1
5	81-0580	Piston — 58 mm	1
6	81-0720	Oil Seal — Upper	1
7	81-0710	Thrust Washer — Upper	1
8	81-0690	Bearing — Upper — 20 mm	1
9	81-1890	Crankshaft/Connecting Rod Assembly	1
10	81-0540	Bolt (30 mm Lg)	6

Ref. No.	Part No.	Description	No. Used
11	81-0770	Collar — Governor	1
12	81-0750	Bracket — Governor Flyweight	1
13	81-0700	Bearing — Lower — 25 mm	1
14	81-0730	Thrust Washer — Lower	1
15	81-0740	Oil Seal — Lower	1
16	81-0760	Pin — Governor	1
17	81-0610	Bearing — Wrist Pin	1
18	81-0570	Bolt	4
19	81-0560	Plate — Mounting	1
20	81-0520	Pin — Crankcase Dowel	2
*	12-2679	Short Block Assembly	1

*Not Illustrated

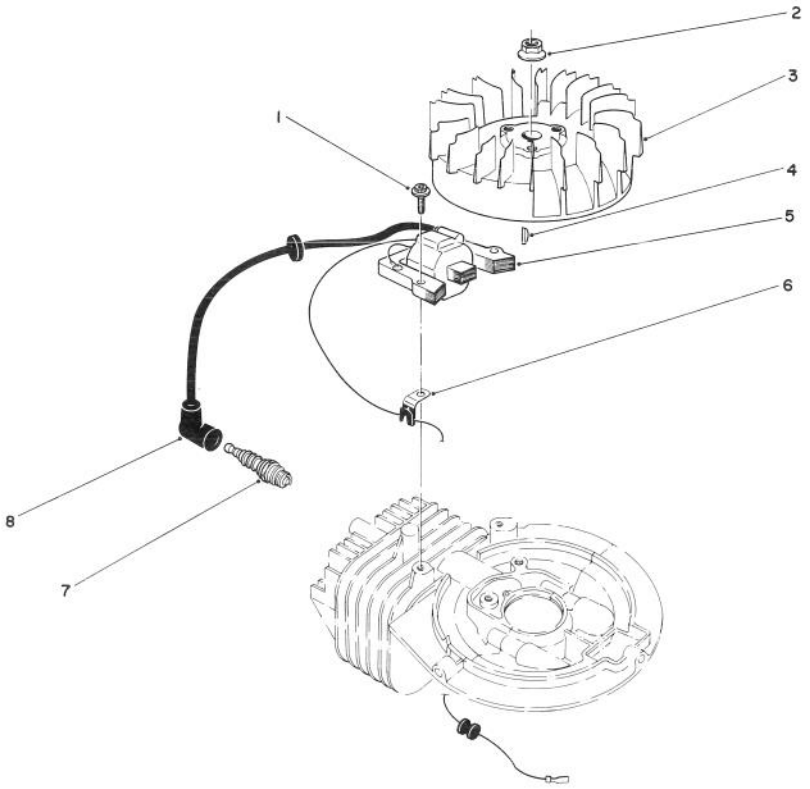

FLYWHEEL & MAGNETO ASSEMBLY

Ref. No.	Part No.	Description	No. Used
1	81-2050	Capscrew — Allenhead	2
2	81-1330	Nut	1
3	81-2810	Flywheel — Magneto	1
4	81-2370	Key — Flywheel	1
5	81-2820	Coil/Ignition Assembly	1
6	81-1480	Clamp	1
7	81-0181	Spark Plug	1
8	81-1500	Cover — Spark Plug	1
*	41-7650	Puller — Flywheel	1

*Not Illustrated

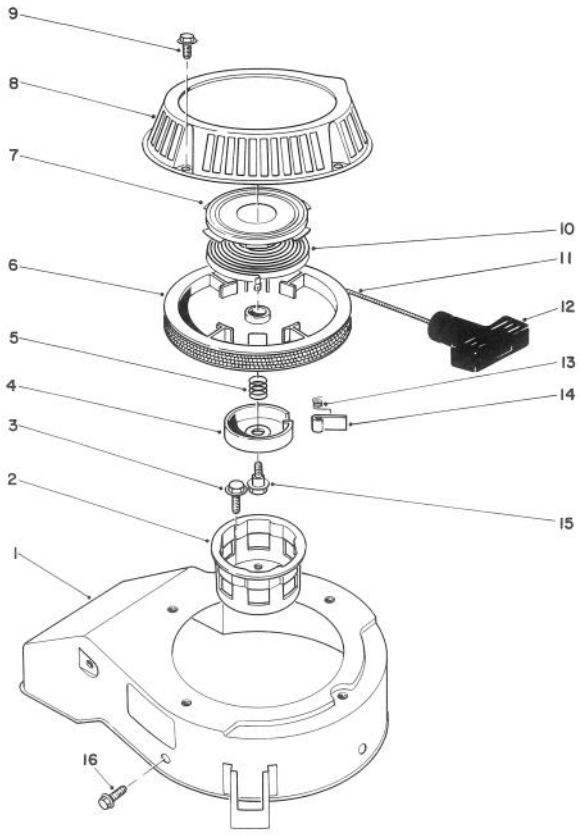

RECOIL ASSEMBLY

Ref. No.	Part No.	Description	No. Used
1	81-2070	Cover — Cooling Fan	1
2	81-1290	Pulley — Starter Cup	1
3	81-1300	Bolt (16 mm Lg.)	3
4	81-1250	Retainer — Dog	1
5	81-1240	Spring — Compression	1
6	81-1210	Reel — Rope Pulley	1
7	81-1640	Retainer Cup — Recoil Spring	1
8	81-2090	Case — Recoil	1
9	81-1280	Bolt	4
10	81-1200	Spring — Recoil	1
11	81-1270	Rope	1

Ref. No.	Part No.	Description	No. Used
12	81-1630	Handle — Recoil	1
13	81-1220	Spring — Dog	1
14	81-1230	Dog	1
15	81-1260	Bolt — Shoulder	1
16	81-1170	Bolt — Self Tapping (15 mm Lg.)	3
*	81-2040	Starter Assembly (Incl. Ref. #4-15)	1
*	81-2300	Spring & Retainer (Incl. Ref. #7 & 10)	1

*Not Illustrated

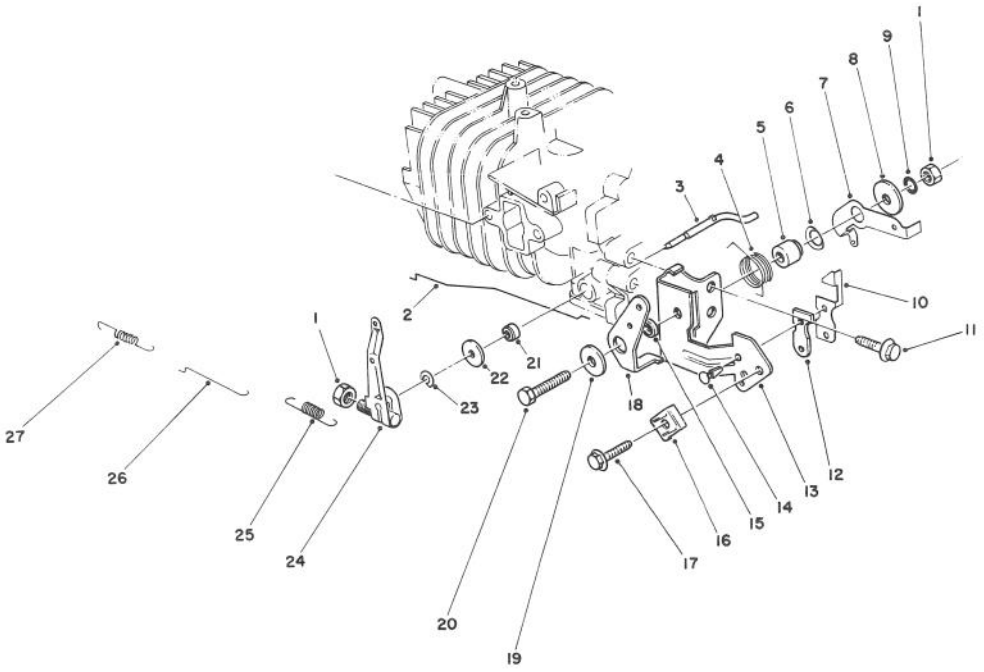

GOVERNOR ASSEMBLY

Ref. No.	Part No.	Description	No. Used
1	81-0900	Nut	2
2	81-1720	Rod — Choke	1
3	81-0840	Shaft — Governor	1
4	81-2460	Spring — Choke Control Lever	1
5	81-1770	Spacer — Governor Spring Lever	1
6	81-1820	Washer — Governor Spring Lever	1
7	81-2850	Lever — Governor Spring	1
8	81-1750	Washer — Governor Control Lever	1
9	81-1450	Washer — Lock	1
10	81-1840	Terminal — Kill Switch	1
11	81-1170	Bolt — Self Tap (15 mm Lg.)	1
12	81-1830	Insulator — Kill Switch	1
13	81-2420	Bracket — Throttle Control	1

Ref. No.	Part No.	Description	No. Used
14	81-1850	Rivet — Kill Switch	2
15	81-2470	Spacer — Choke Control Lever	1
16	81-2430	Clamp — Cable	1
17	50-0130	Bolt — Cable Clamp	1
18	81-1710	Lever — Choke Control	1
19	50-0760	Washer — Choke Control Lever	1
20	81-1730	Bolt — Throttle Control Bracket	1
21	81-0850	Oil Seal — Governor Shaft	1
22	81-0860	Washer	1
23	81-0870	E-Ring	1
24	81-2840	Governor Arm/Bolt Assembly	1
25	81-2830	Spring — Governor	1
26	81-0910	Rod — Carburetor	1
27	81-0920	Spring — Carburetor Rod	1

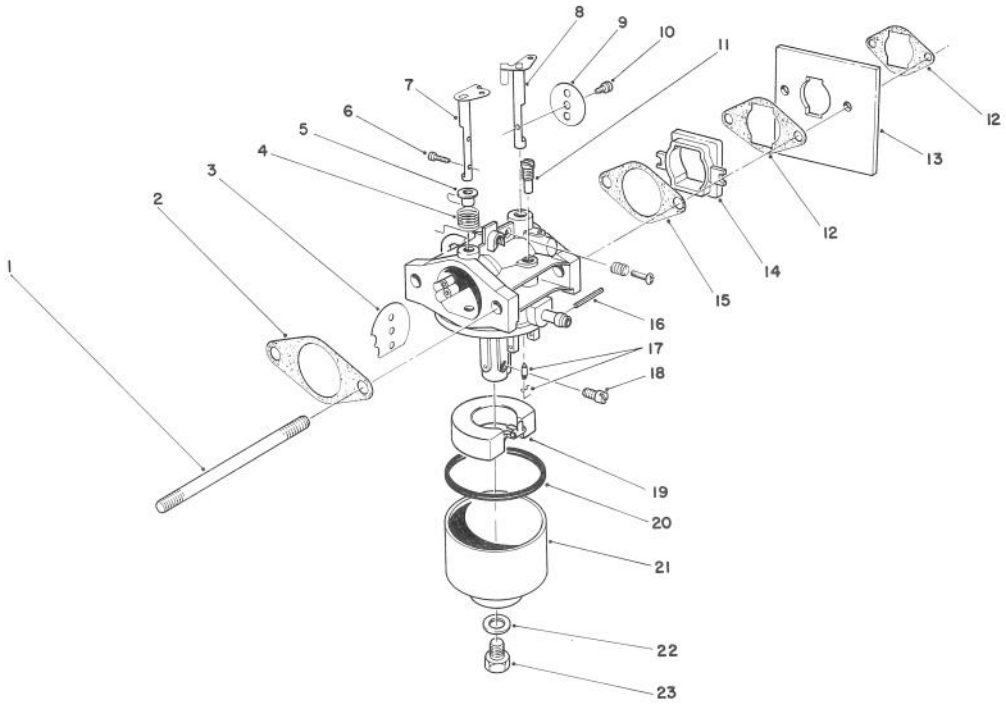

CARBURETOR ASSEMBLY

Ref. No.	Part No.	Description	No. Used
1	81-2240	Stud Bolt — Carburetor	2
2	81-0090	Gasket	1
3	81-0240	Valve — Choke	1
4	81-0230	Spring — Choke	1
5	81-0220	Bushing — Choke Valve	1
6	81-2160	Screw — Choke Valve	2
7	81-1950	Shaft — Choke	1
8	81-0250	Shaft — Throttle	1
9	81-0260	Valve — Throttle	1
10	81-0270	Screw — Throttle Valve	1
11	81-1030	Jet — Pilot # (40)	1
12	81-2320	Gasket — Shield	2
13	81-2330	Shield — Carburetor	1
14	81-2190	Insulator — Carburetor	1
15	81-0780	Gasket	1

Ref. No.	Part No.	Description	No. Used
16	81-0980	Pin — Float	1
17	81-1600	Needle Valve/Float	1
18	81-1940	Jet — Main # (76.3)	1
*	81-2340	Jet — Main # (72.5) High Alt., Above 6,000 (Optional)	1
19	81-0970	Float	1
20	81-1010	Gasket — Float Bowl	1
21	81-1610	Bowl — Float	1
22	81-1020	Gasket — Bowl Screw	1
23	81-1000	Screw — Bowl	1
*	81-1960	Carburetor Kit (Incl. Ref. #2, 15, 17, 20 & 22)	1
*	81-1930	Carburetor Assembly Complete	1

*Not Illustrated

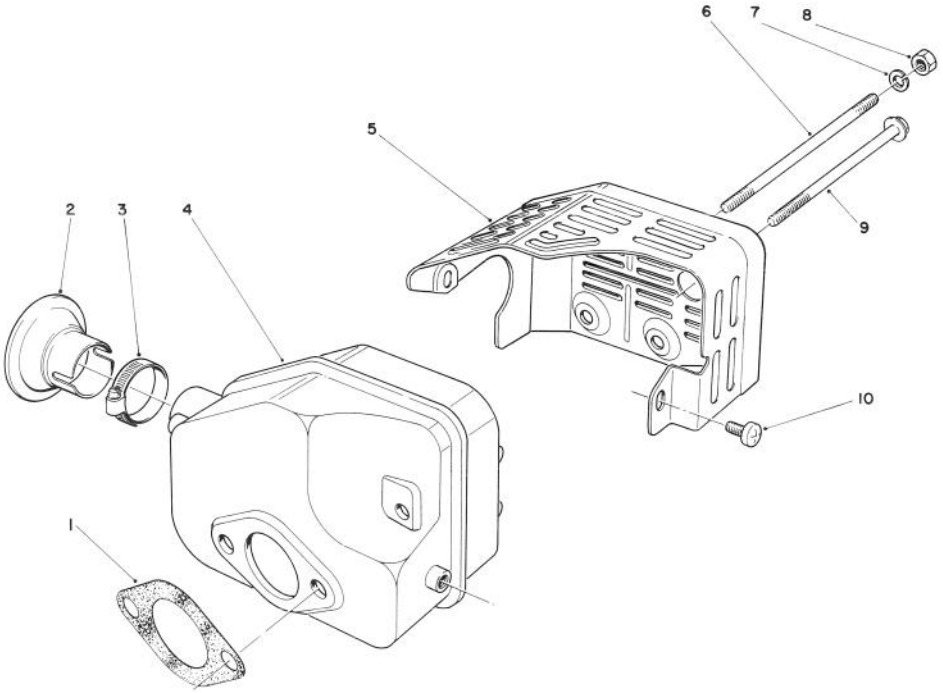

MUFFLER ASSEMBLY

Ref. No.	Part No.	Description	No. Used
1	81-1080	Gasket — Muffler	1
2*	81-0200	Spark Arrester	1
3†		Clamp	1
4	81-1090	Muffler	1
5	81-2450	Cover — Muffler	1

Ref. No.	Part No.	Description	No. Used
6	81-1100	Bolt	2
7	81-1120	Washer — Lock	2
8	81-1110	Nut	2
9	81-1150	Bolt — Self Tapping	1
10	81-1140	Screw — Phillips Hd.	2

*Optional Equipment
†Obtain Locally