FORM NO. 3312-860

TORO®

MODEL NO. 20680-6000001 & UP

PARTS CATALOG

21" S.P. REAR BAGGER

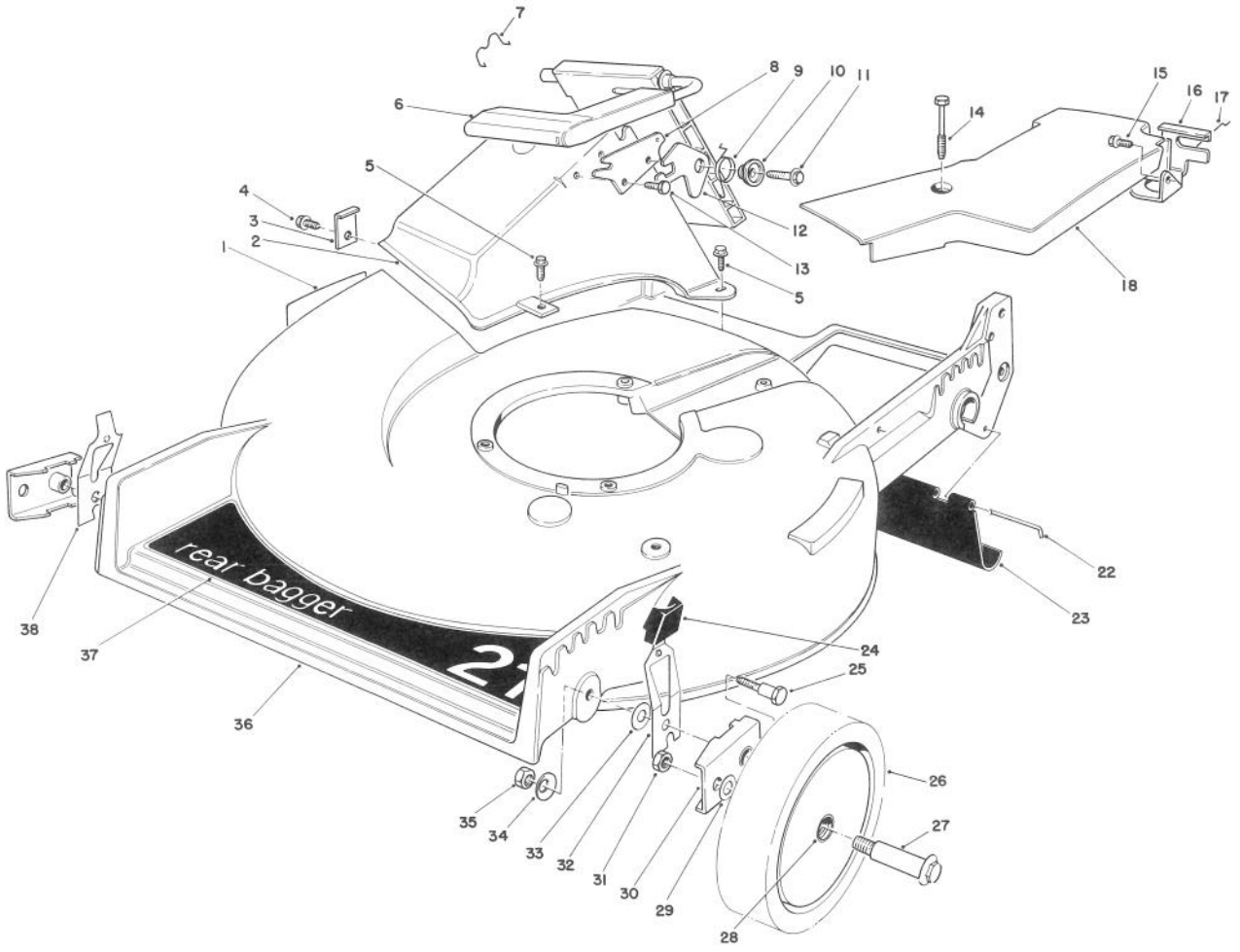

HOUSING ASSEMBLY

Ref. No.	Part No.	Description	No. Used
1	39-5770	Decal — Danger	1
2	46-3500	Tunnel — Discharge	1
3	47-6540	Clip — Tunnel	1
4	12-3270	Screw — Thread Forming Hex Washer Hd.	1
5	46-6811	Screw — Thread Forming Hex Washer Hd.	3
6	51-0200	Discharge Door Assembly	1
7	47-5840	Door — Retainer	1
8	23-1040	Plate — Latch	1
9	33-4860	Spring — Torsion	1
10	43-4840	Spacer — Latch	1
11	46-8091	Screw — Self Tapping Hex Washer Hd.	1

Ref. No.	Part No.	Description	No. Used
12	42-4010	Latch — Safety	1
13	46-8090	Screw — Self Tapping Hex Washer Hd.	1
14	37-7260	Capscrew — Special	2
15	32144-11	Screw — Thread Forming Hex Washer Hd.	1
16	46-5870	Bracket — Traction Adj.	1
17	46-7030	Retainer — Cable	1
18	52-7390	Cover — Belt	1
22	33-3208	Rod — Shield	1
23	44-0580	Shield — Trailing	1
24	25-7740	Knob Arm	2
25	44-5270	Screw — Pivot	2

PRICE $1.00

© The Toro Company — 1986

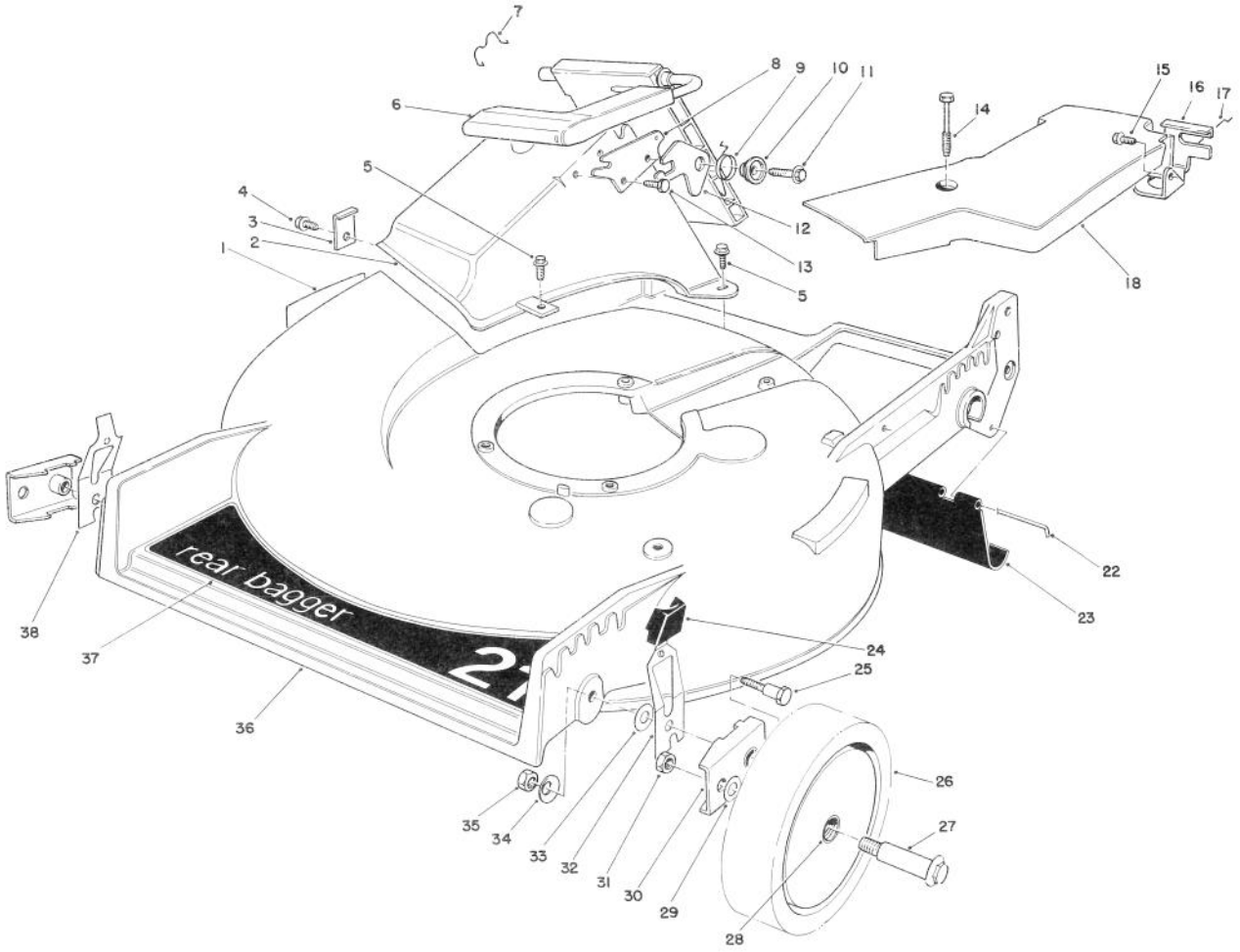

HOUSING ASSEMBLY (Continued)

Ref. No.	Part No.	Description	No. Used
26	11-9509	Wheel & Tire Assembly (Incl. Ref. #28)	2
27	27-6230	Wheel Bolt	2
28	27-6250	Bushing — Wheel	4
29	40-1940	Washer — Wheel Bolt	2
30	47-2940	Pivot Arm Assembly	2
31	52-3620	Nut — Lock	2

Ref. No.	Part No.	Description	No. Used
32	52-7480	Spring Arm Assembly (L.H.)	1
33	5-4460	Washer — Pivot	2
34	3290-456	Washer — Belleville	2
35	3296-29	Nut — Lock	2
36	11-4089	Housing (Incl. Ref. #1)	1
37	44-0450	Decal — 21" Rear Bagger	1
38	52-7490	Spring Arm Assembly (R.H.)	1

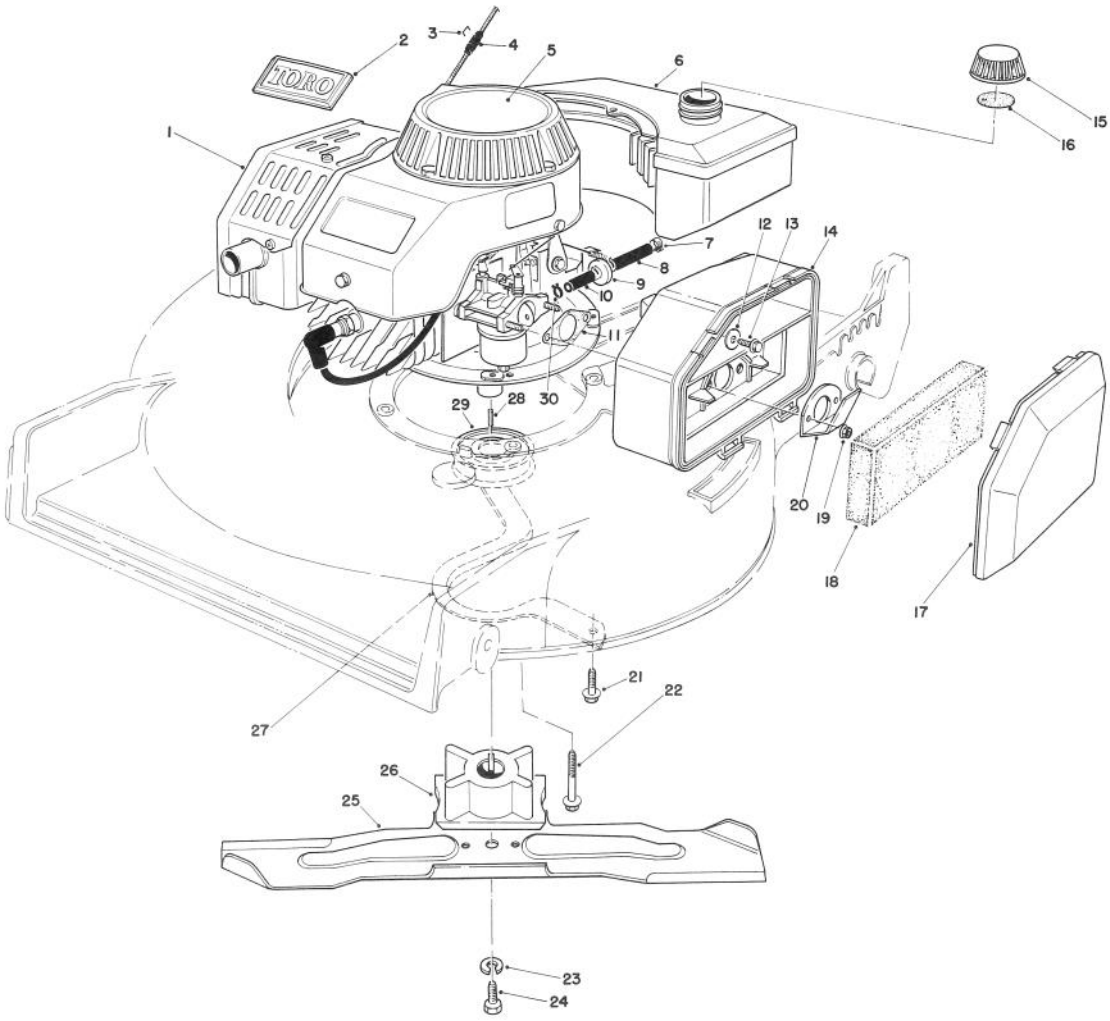

ENGINE ASSEMBLY

Ref. No.	Part No.	Description	No. Used
1	59257	Engine (Complete)	1
2	46-8290	Plate — Toro Logo	1
3*		Staple	1
4	47-2480	Stop — Rope	1
5	57-9870	Decal — Recoil	1
6	81-0041	Fuel Tank Assembly	1
7	2412-95	Clamp — Fuel Line	3
8	51-3216	Fuel Line	1
9	56-6360	Filter — Fuel	1
10	51-3215	Fuel Line	1
11	81-0090	Gasket — Air Cleaner	1
12	3256-16	Washer — Flat	1
13	51-2690	Screw — Cap Hex Washer Hd.	1
14	81-0110	Air Cleaner	1
15	42-0681	Gas Cap Assembly (Incl. Ref. #16)	1

Ref. No.	Part No.	Description	No. Used
16	20-4620	Gasket — Gas Cap	1
17	81-0120	Cover — Air Cleaner	1
18	81-0100	Foam Element — Air Cleaner	1
19	49-7810	Nut — Lock	2
20	81-0140	Deflector	1
21	11-9760	Screw — Thread Forming Hex Washer Hd.	2
22	3234-11	Screw — Hex Flange	4
23	3253-22	Washer — Lock	1
24	26-0670	Screw — Blade	1
25	42-1000	Blade 21"	1
26	46-7810	Retainer — Blade	1
27	40-5720	Guide — Belt	1
28	7-0036	Key — Square	1
29	46-7910	Pulley — Driver	1
30	2412-80	Clamp — Fuel Line	1

*Obtain Locally

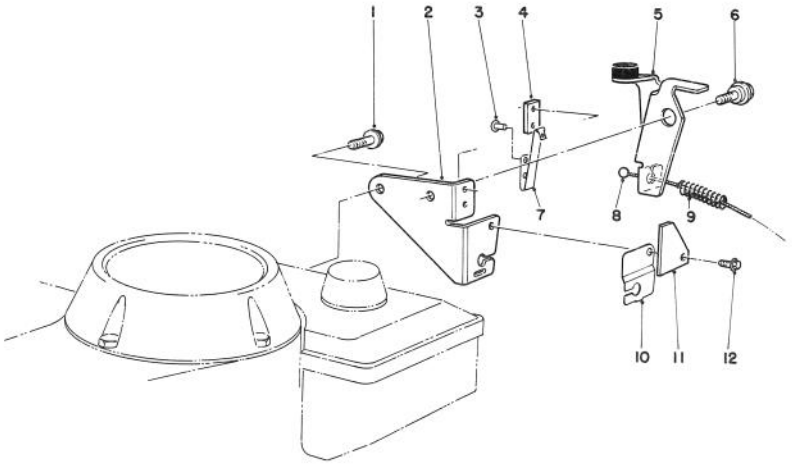

BRAKE ASSEMBLY

Ref. No.	Part No.	Description	No. Used
1	46-0790	Screw — Self Tapping	1
2	53-4620	Plate — Mounting	1
3	3290-459	Rivet	2
4	53-4670	Strap — Insulation	1
5	53-4770	Brake Plate Assembly	1
6	56-6190	Screw — Shoulder, Metric	1

Ref. No.	Part No.	Description	No. Used
7	53-4680	Strap — Ground	1
8	56-6091	Cable — Brake	1
9	56-6370	Spring — Compression	1
10	53-4610	Clamp — Cable	1
11	53-4690	Stop — Ground Strap	1
12	12-5450	Screw — Self Tapping	1

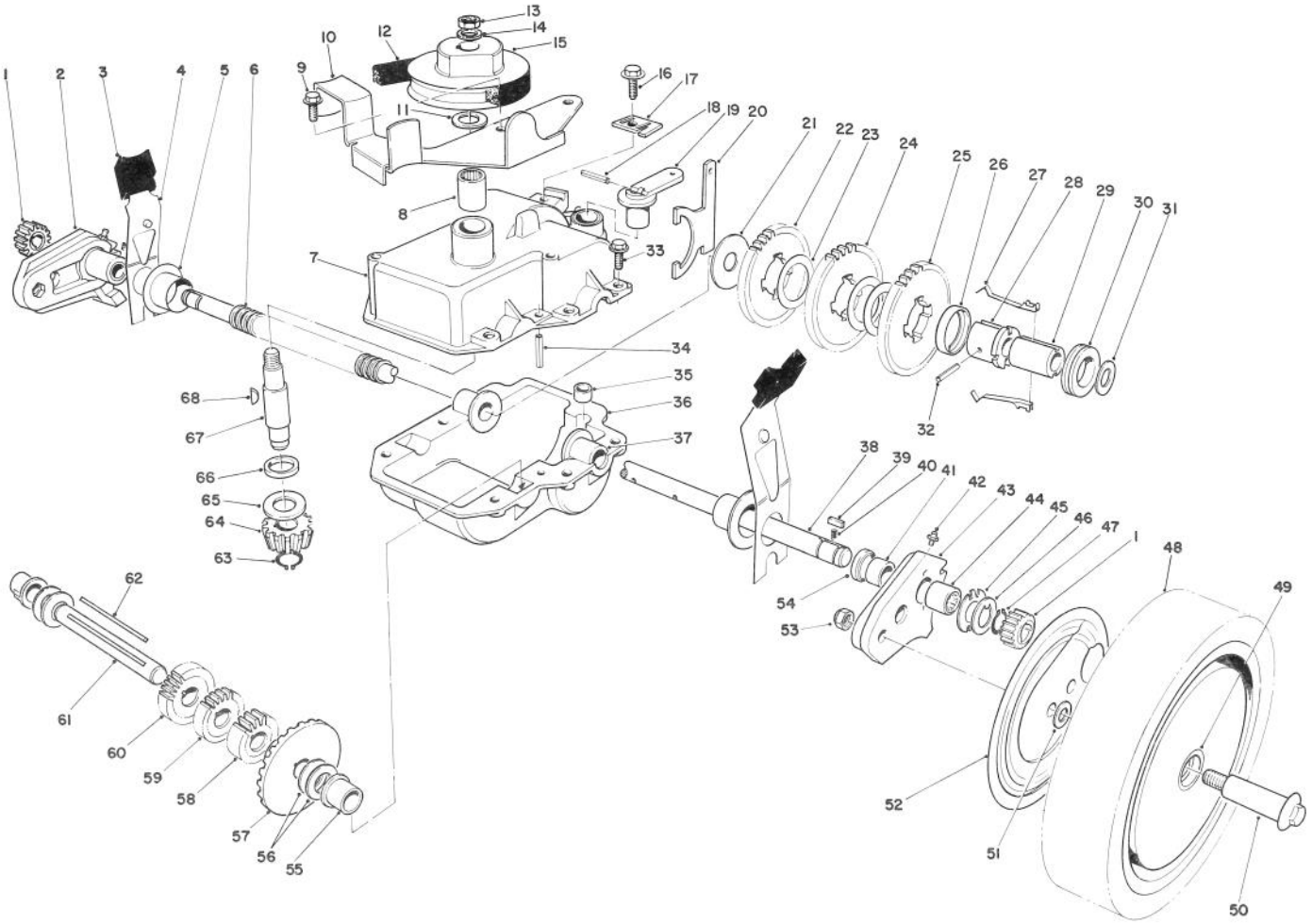

GEAR CASE ASSEMBLY

Ref. No.	Part No.	Description	No. Used
1	39-9160	Pinion	2
2	49-7720	Pivot Arm Assembly — R.H. (Incl. Ref. #41, 42, 44 & 54)	1
3	25-7740	Knob — Arm	2
4	44-1010	Spring Arm Assembly	2
5	42-3520	End Cap	2
6	24-7922	Cover — Drive Shaft	1
7	39-7283	Upper Case	1
8	47-6720	Bearing	1
9	12-3270	Screw — Special	2
10	49-8460	Bracket — Belt Guide	1
11	36-4790	Washer — Thrust	1
12	36-8070	V-Belt	1
13	3296-5	Locknut	1
14	3256-45	Washer	1
15	39-6740	Pulley	1
16	32144-11	Screw — Thread Forming	1
17	46-5610	Cable Clamp	1
18	32121-99	Coil Pin	1
19	29-9560	Lever — Shift	1
20	29-9520	Shift Yoke	1
21	29-9690	Washer	1
22	42-4740	Gear — 38T	1

Ref. No.	Part No.	Description	No. Used
23	36-4770	Spacer — Gear	3
24	29-9271	Gear — 42T	1
25	46-3560	Gear — 52T	1
26	55-8020	Key Retainer	1
27	29-9330	Key	2
28	55-8010	Sleeve — Body	1
29	39-6720	Sleeve	1
30	29-9340	Shift Collar	1
31	36-4780	Washer	1
32	32121-106	Coil Pin	1
33	49-2040	Screw — Tapping	6
34	32121-100	Roll Pin	1
35	29-9570	Bushing — Yoke	1
36	29-9410	Lower Case	1
37	47-5220	Bushing — Output Shaft	2
38	53-7870	Output Shaft	1
39	39-9680	Key — Rectangular	2
40	39-9650	Spring	2
41	47-2890	Bushing	2
42	302-56	Fitting Grease	2
43	49-7710	Pivot Arm Assembly — L.H. (Incl. Ref. #41, 42, 44 & 54)	1
44	48-2060	Needle Bearing	2

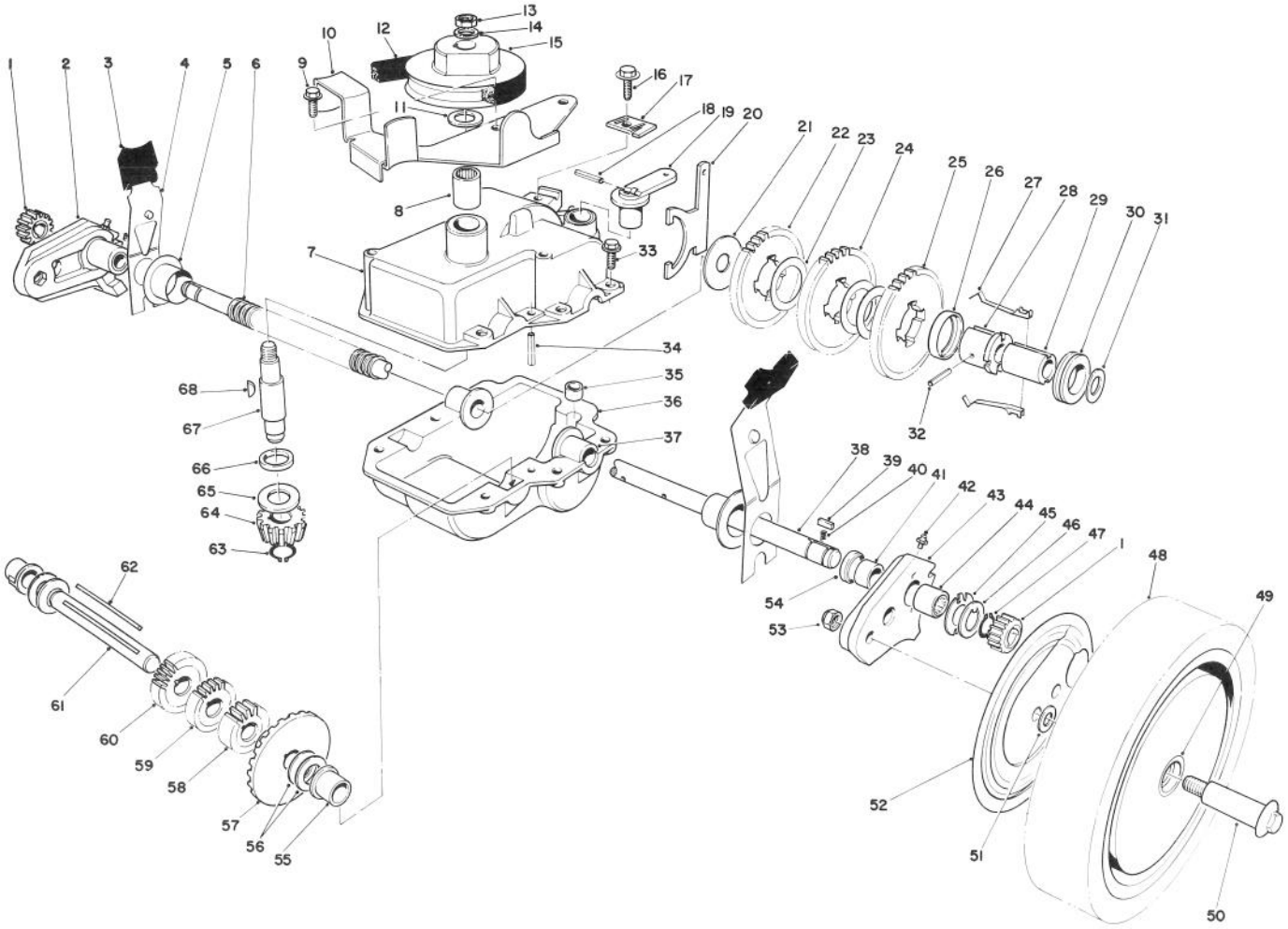

GEAR CASE ASSEMBLY (Continued)

Ref. No.	Part No.	Description	No. Used
45	49-7690	Washer — Thrust, Inner	2
46	49-7700	Washer — Thrust, Outer	2
47	32151-61	Retaining Ring	4
48	11-9519	Wheel, Tire & Gear Assembly (Incl. Ref. #49)	2
49	27-6250	Bushing — Wheel	4
50	27-6231	Wheel Bolt	2
51	40-1940	Washer — Wheel Bolt	2
52	52-4860	Cover — Wheel	2
53	52-3620	Nut — Lock	2
54	47-6730	Seal	2
55	52-5410	Bushing — Short Shaft	2
56	36-4791	Washer — Thrust	4

Ref. No.	Part No.	Description	No. Used
57	39-6670	Gear — Bevel	1
58	46-3540	Gear — 12 Tooth	1
59	46-3550	Gear — 14 Tooth	1
60	39-6650	Gear — 18 Tooth	1
61	46-9470	Shaft — Intermediate	1
62	39-7843	Key — Square	1
63	32151-57	Ring — Retaining	1
64	39-6660	Pinion — Bevel	1
65	47-2910	Washer — Thrust	1
66	47-7260	Seal	1
67	39-6690	Input Shaft	1
68	3257-1	Key — Woodruff	2
*	46-3581	Gear Case Assembly Complete	1

*Not Illustrated

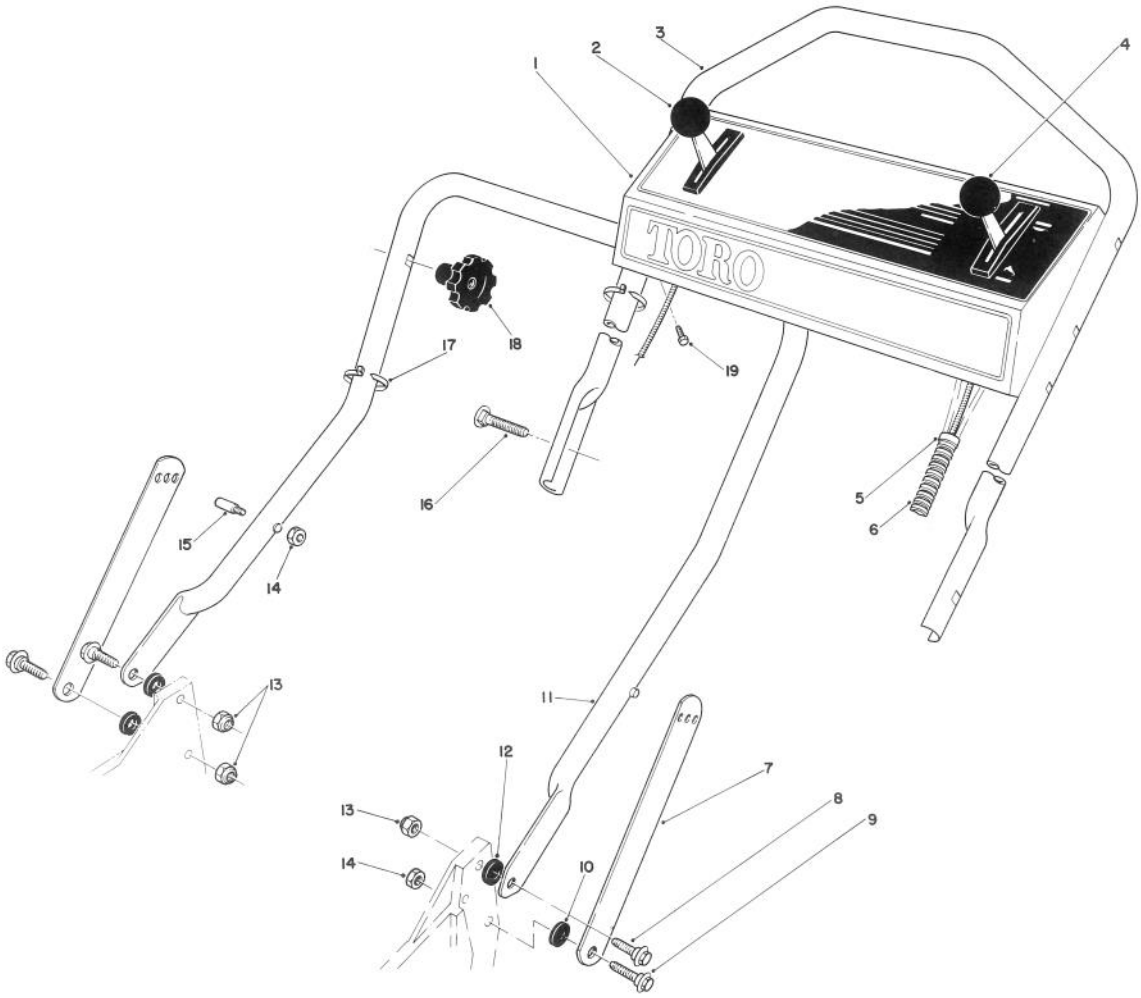

HANDLE ASSEMBLY

Ref. No.	Part No.	Description	No. Used
1	56-6670	Panel — Control	1
2	46-6000	Control — Ground Speed (Bend Type #1) (Sheath Lg. 42¼ inch) (Wire Lg. 3⅛ inch)	1
3	46-5411	Handle — Upper	1
4	49-4193	Control — Throttle (Bend Type #2) (Sheath Lg. 54¼ inch) (Wire Lg. 2⅜ inch)	1
5	2412-50	Clip — Convoluted Tubing	4
6	46-6440	Cover Control Cables	1
7	43-1370	Latch — Handle	2

Ref. No.	Part No.	Description	No. Used
8	27-7211	Screw — Shoulder	2
9	27-7210	Screw — Shoulder	2
10	3-3287	Spacer — Handle Latch	2
11	43-1361	Lower Handle Assembly	1
12	55-8060	Spacer	2
13	3296-29	Nut — Lock	3
14	3296-47	Nut — Lock	3
15†	49-2750	Pin — Handle	2
16	17-9421	Screw — Handle	2
17	3290-378	Cable Tie	3
18	19-4050	Knob — Handle Release	2
19	32104-76	Screw — Self Tap Slotted	5

† Service Replacement Parts

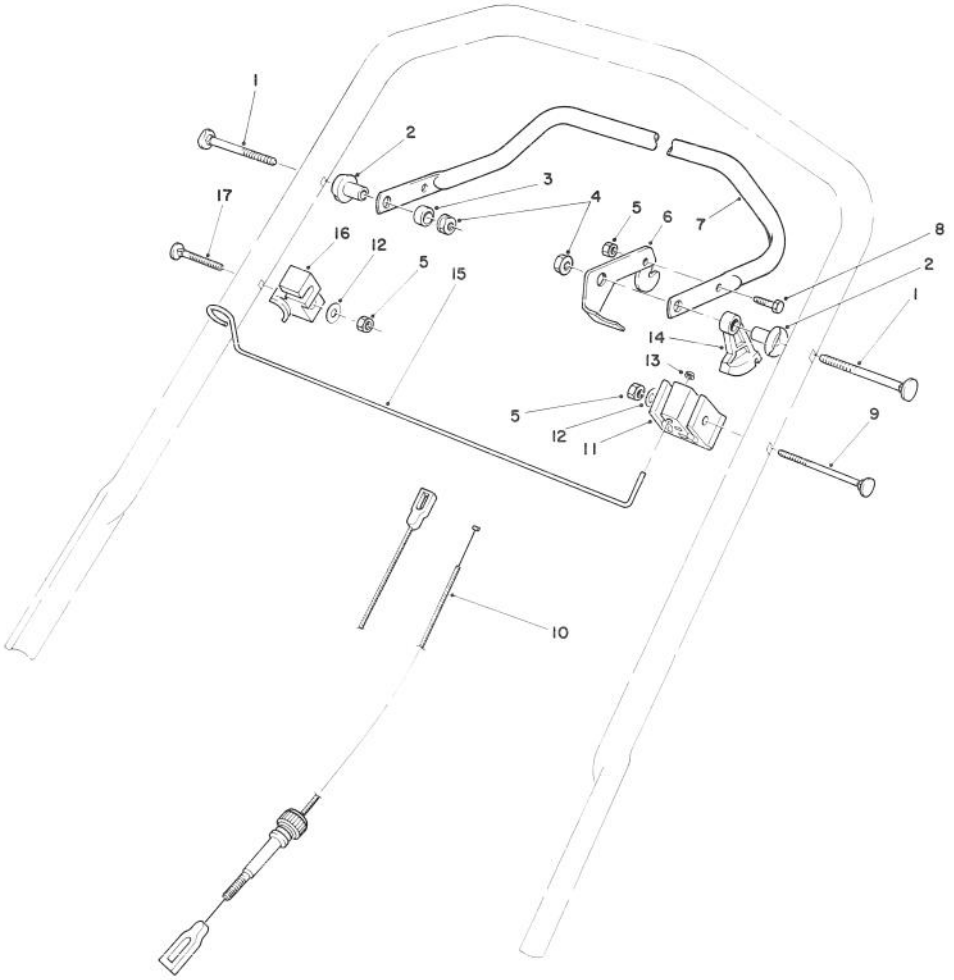

TRACTION CONTROL ASSEMBLY

Ref. No.	Part No.	Description	No. Used
1	17-9421	Screw — Handle	2
2	49-1630	Support — Spacer	2
3	256-276	Spacer — Nylon	1
4	3296-58	Nut — Flange Lock	2
5	3296-42	Nut — Lock	3
6	46-7950	Lever — Control	1
7	52-7430	Control Bar Assembly	1
8	321-3	Screw — Cap Hex Hd.	1
9	46-6434	Screw — Handle	1

Ref. No.	Part No.	Description	No. Used
10	46-5481	Cable — Traction	1
11	46-6980	Support Cable	1
12	3256-22	Washer — Plain	2
13	3290-337	Push Nut	1
14	46-5520	Lever Traction	1
15	46-7970	Rod — Rope	1
16	46-7960	Catch — Rod	1
17	46-6430	Screw — Handle	1

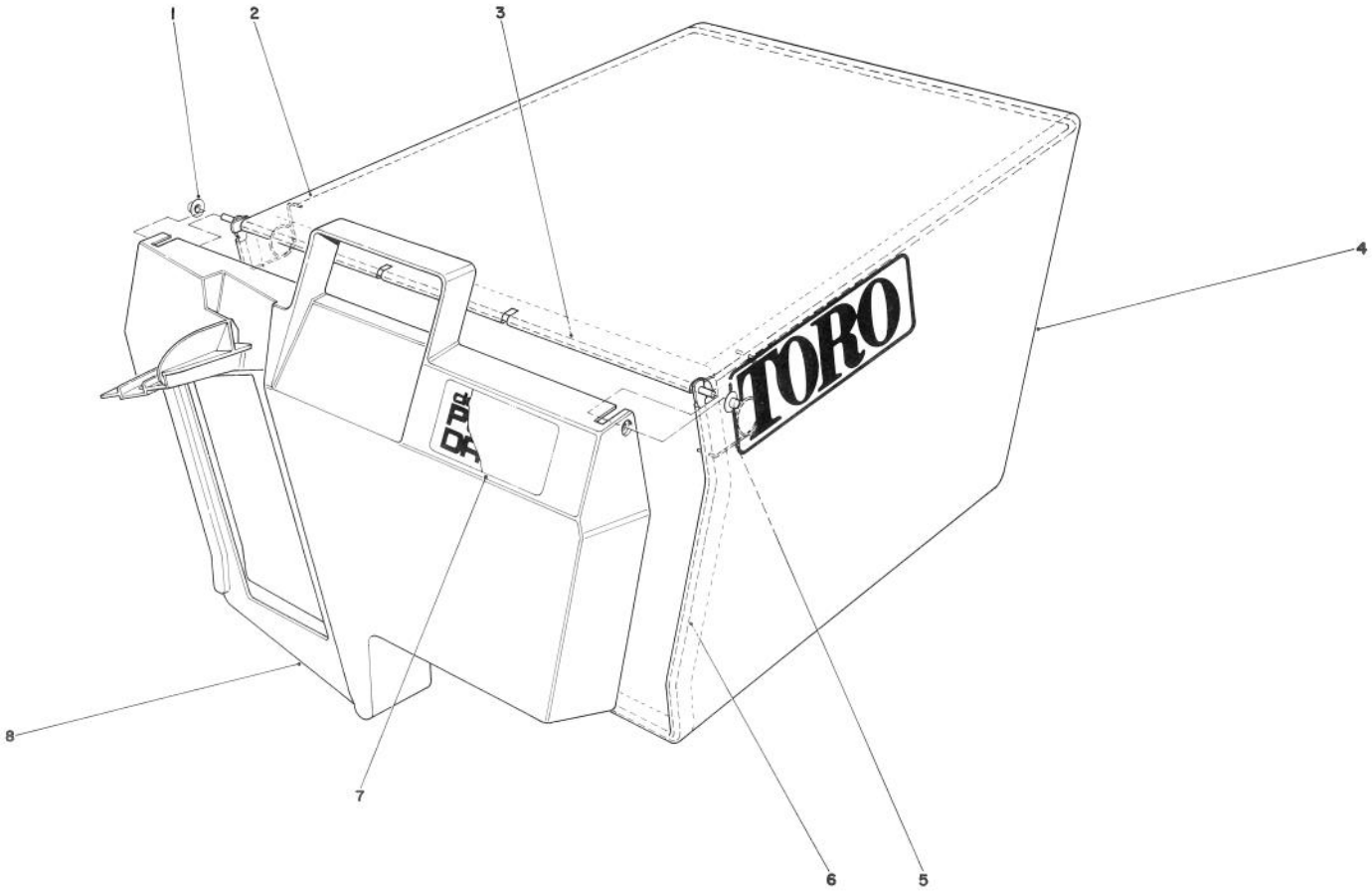

GRASS BAG ASSEMBLY NO. 11-0189

Ref. No.	Part No.	Description	No. Used
1	3290-422	Nut — Push	2
2	42-4030	Bag Frame — Upper	1
3	33-4820	Hinge — Bag Door	1
4	8-2759	Grass Bag	1

Ref. No.	Part No.	Description	No. Used
5	36-6910	Spring	2
6	42-4020	Frame — Bag	1
7	40-2240	Decal — Bag Door	1
8	37-1392	Door — Grass Bag	1

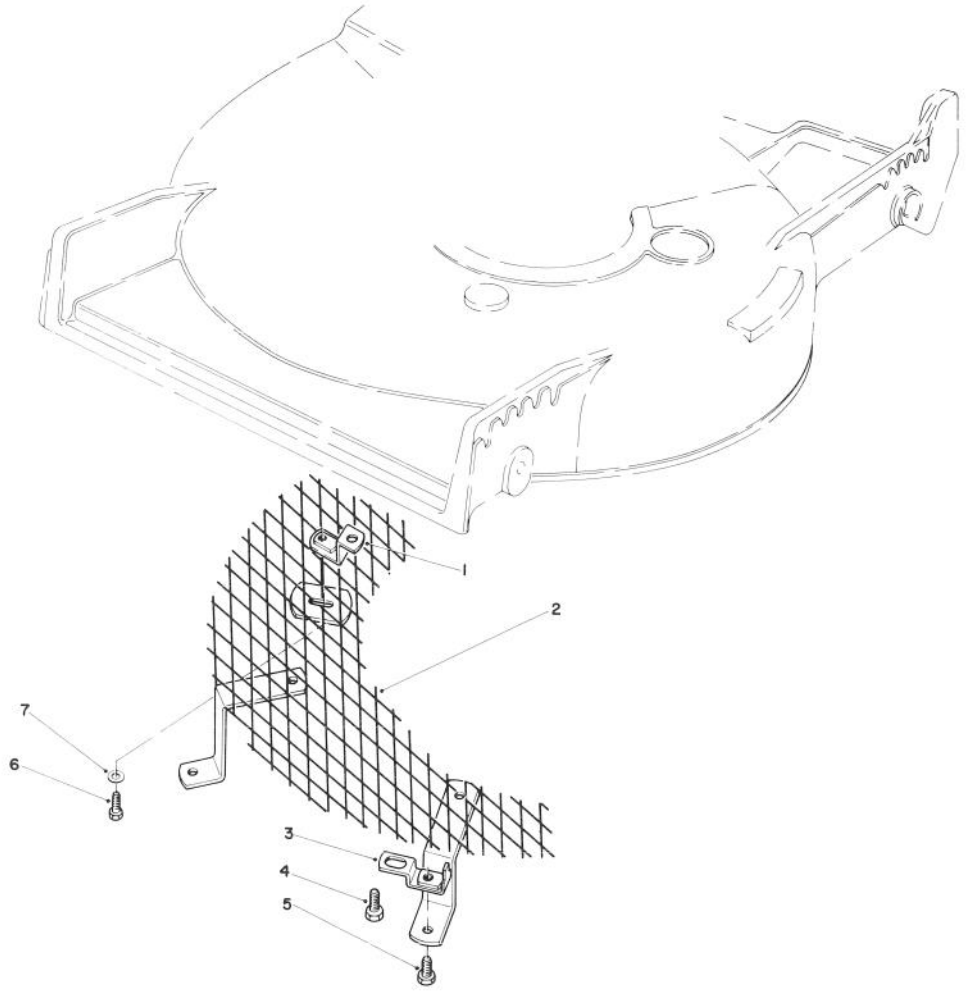

LEAF SHREDDER KIT MODEL NO. 59157 (Optional)

Ref. No.	Part No.	Description	No. Used
1	47-6260	Bracket	1
2	47-6230	Screen	1
3	46-4880	Mounting Bracket	2
4	32144-11	Screw — Self Tapping	3

Ref. No.	Part No.	Description	Ref. No.
5	321-3	Capscrew, Hex Hd.	2
6	321-5	Capscrew, Hex Hd.	1
7	3256-1	Washer	1

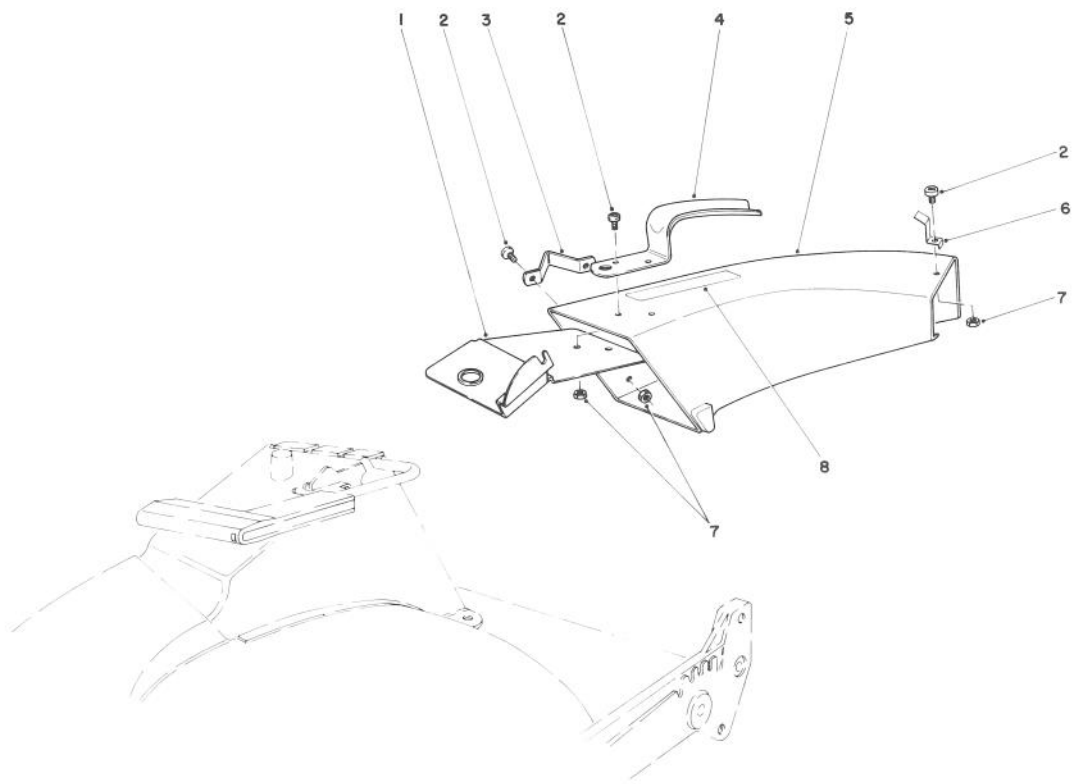

SIDE DISCHARGE CHUTE MODEL NO. 59108 (Optional)

Ref. No.	Part No.	Description	No. Used
1	44-2330	Plate — Discharge Chute	1
2	3251-3	Screw	5
3	46-6580	Bracket — Side	1
4	42-1340	Handle — Grass Chute	1
5	11-7149	Chute — Discharge (Incl. Ref. #8)	1

Ref. No.	Part No.	Description	No. Used
6	49-2630	Clip — Cable Stop	1
7	3296-12	Locknut	5
8	39-9120	Decal — Caution	1

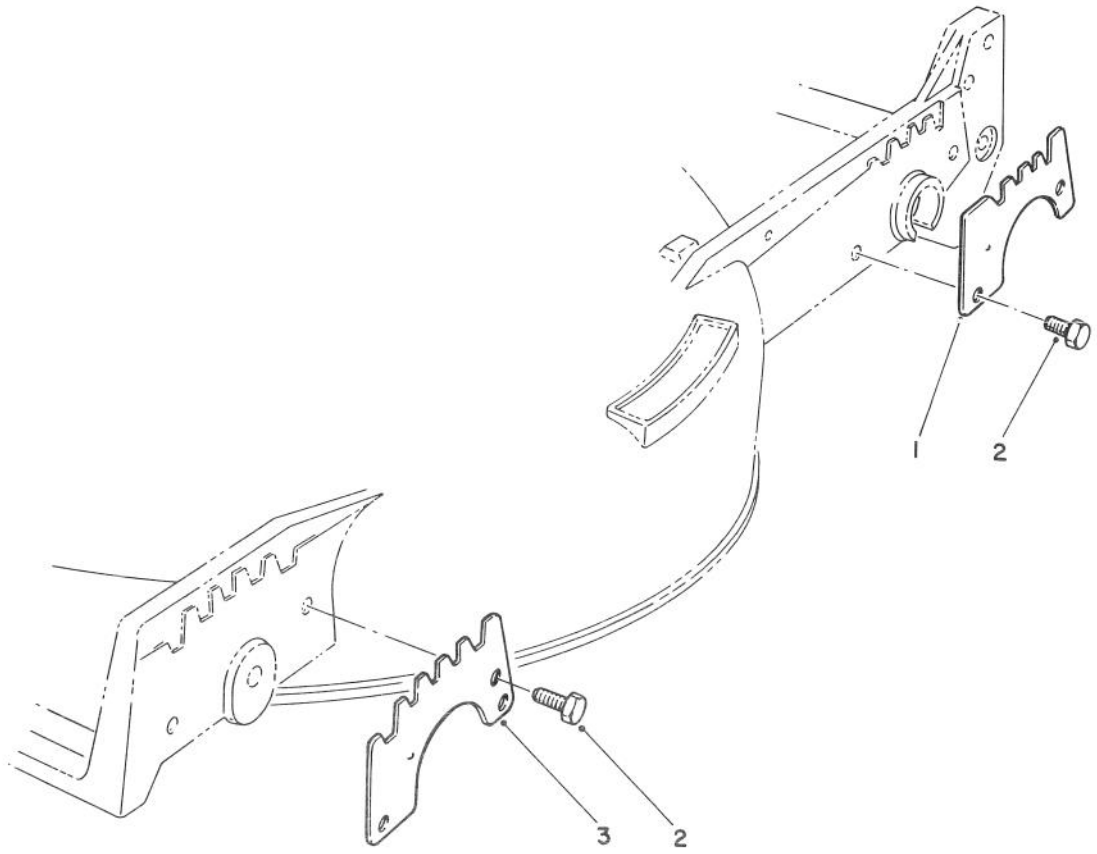

WEAR PLATE KIT NO. 49-4080 (Optional)

Ref. No.	Part No.	Description	No. Used
1	49-4070	Plate — Wear, Rear	2
2	32104-17	Screw — Thread Forming	8

Ref. No.	Part No.	Description	No. Used
3	43-5050	Plate — Wear, Front	2

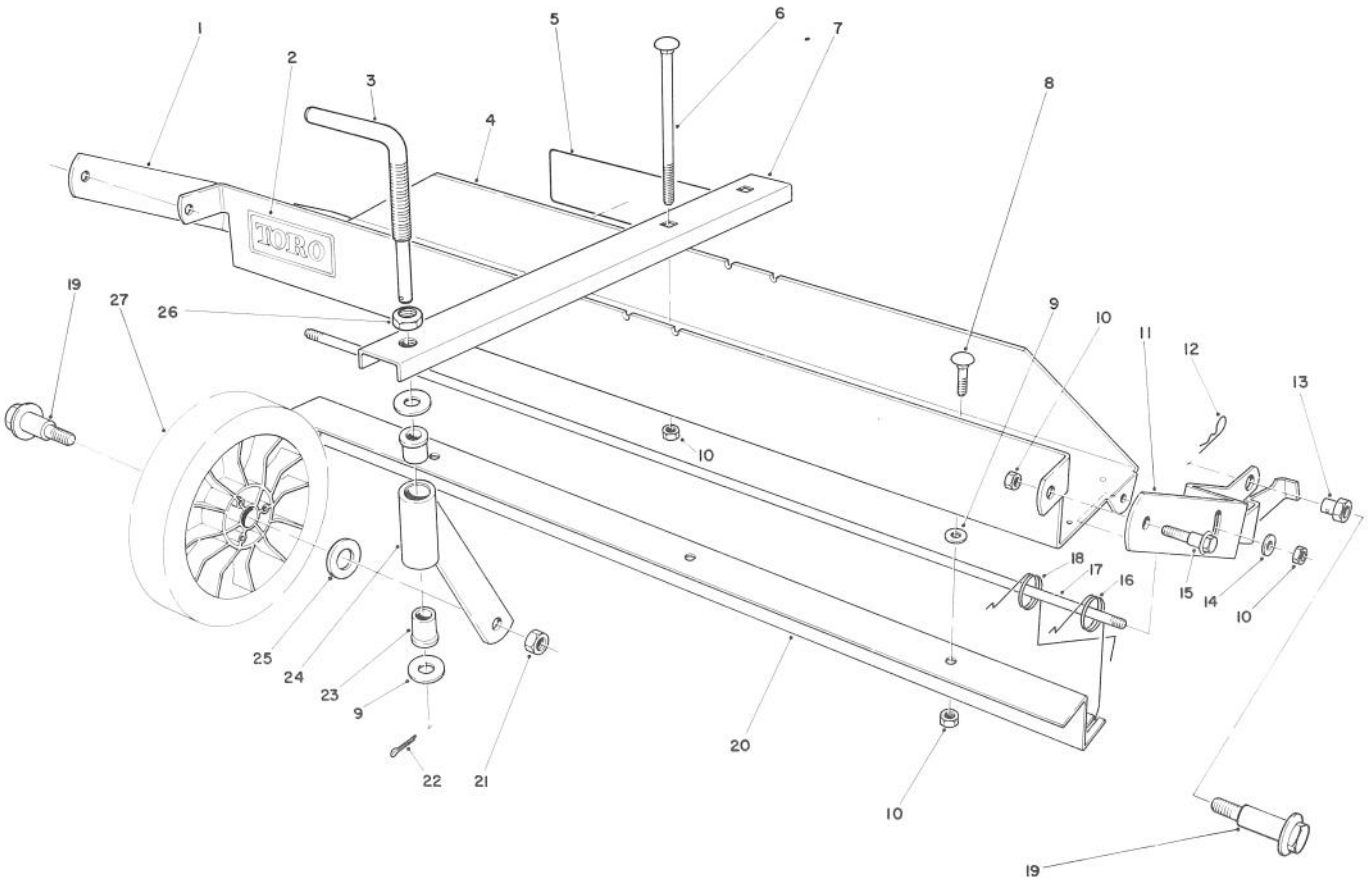

DETHATCHER KIT MODEL NO. 59126 (Optional)

Ref. No.	Part No.	Description	No. Used
1	47-6030	Frame Mount — R.H.	1
2	44-0810	Decal — Toro	1
3	47-6120	Rod — Castor Adjust	1
4	47-2390	Frame — Main (Incl. Ref. #2)	1
5	47-7500	Decal — Instruction	1
6	3230-13	Carriage Bolt	2
7	47-6090	Castor Frame	1
8	3230-1	Carriage Bolt	3
9	3256-23	Washer	5
10	32153-3	Locknut	9
11	47-6020	Frame Mount — L.H.	1
12	3290-255	Hairpin Cotter	2
13	47-6130	Pivot Nut	2
14	3256-24	Washer — Plain	2

Ref. No.	Part No.	Description	No. Used
15	37-8771	Screw — Shoulder	2
16	47-6040	Spring — Dethatcher	6
17	47-6050	Rod — Spring Support	1
18	47-6041	Spring — Dethatcher	6
19	27-6230	Wheel Bolt	3
20	47-6010	Strap — Spring Guide	1
21	3296-6	Locknut	1
22	3272-10	Cotter Pin	1
23	47-6110	Bushing — Flange	2
24	47-6060	Castor Tube & Support	1
25	40-1940	Washer — Wheel	1
26	3220-5	Nut — Jam	1
27	34-0380	Wheel Assembly	1
*	11-5239	Loose Parts	1

*Not Illustrated

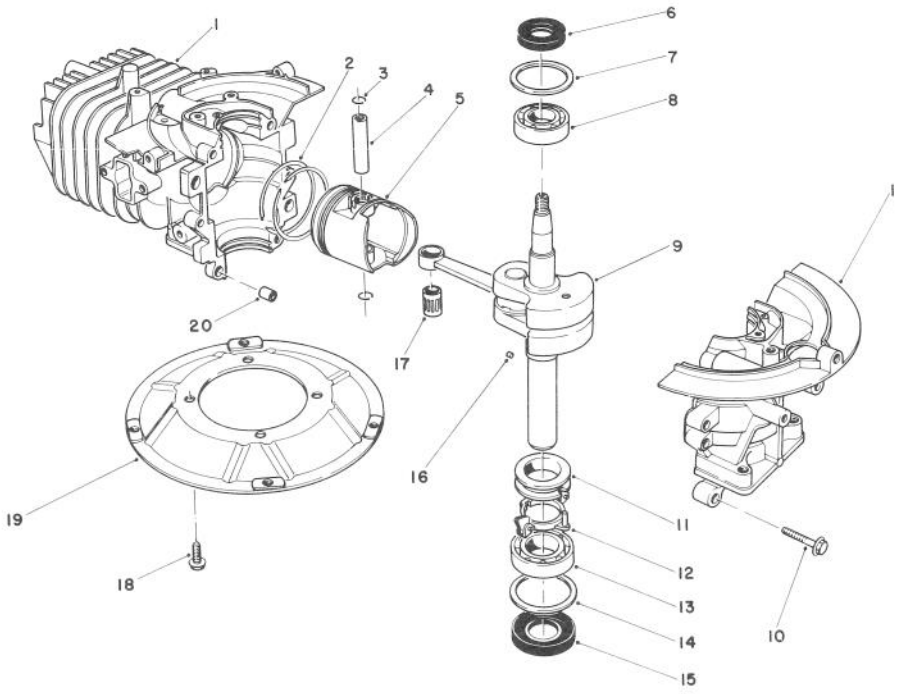

CRANKSHAFT ASSEMBLY

Ref. No.	Part No.	Description	No. Used
1	81-2800	Crankcase/Cylinder Assy.	1
2	81-0590	Ring Set	1
3	81-0620	Circlip	2
4	81-0600	Pin — Wrist	1
5	81-0580	Piston (58 mm)	1
6	81-0720	Oil Seal — Upper	1
7	81-0710	Thrust Washer — Upper	1
8	81-0690	Bearing — Upper (20 mm)	1
9	81-1550	Crankshaft/Connecting Rod Assembly	1
10	81-0540	Bolt (30 mm Lg.)	6

Ref. No.	Part No.	Description	No. Used
11	81-0770	Spacer — Governor	1
12	81-0750	Bracket — Governor Arm	1
13	81-0700	Bearing — Lower (25 mm)	1
14	81-0730	Thrust Washer — Lower	1
15	81-0740	Oil Seal — Lower	1
16	81-0760	Pin — Crankshaft	1
17	81-0610	Bearing — Wrist Pin	1
18	81-0570	Bolt (20 mm Lg.)	4
19	81-0560	Plate — Mounting	1
20	81-0520	Pin — Crankcase	2
*	12-2519	Short Block Assembly	1

*Not Illustrated

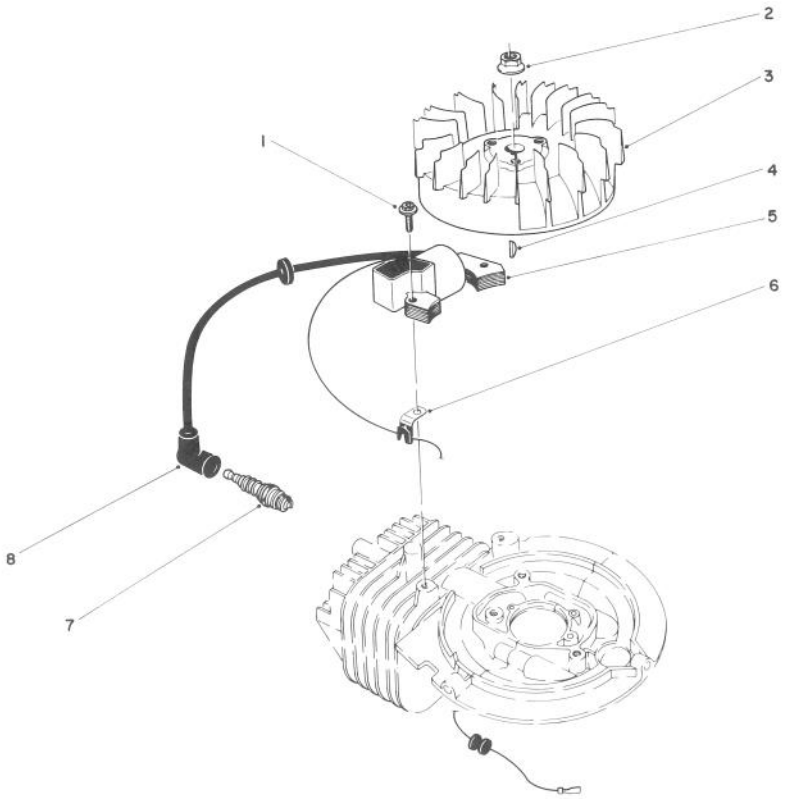

FLYWHEEL & MAGNETO ASSEMBLY

Ref. No.	Part No.	Description	No. Used
1	81-2050	Capscrew — Allenhead	2
2	81-1330	Nut	1
3	81-2810	Flywheel — Magneto	1
4	81-2370	Key — Flywheel	1
5	81-2820	Coil/Ignition Assembly	1

Ref. No.	Part No.	Description	No. Used
6	81-1480	Clamp	1
7	81-0181	Spark Plug	1
8	81-1500	Cover — Spark Plug	1
*	41-7650	Puller — Flywheel	1

*Not Illustrated

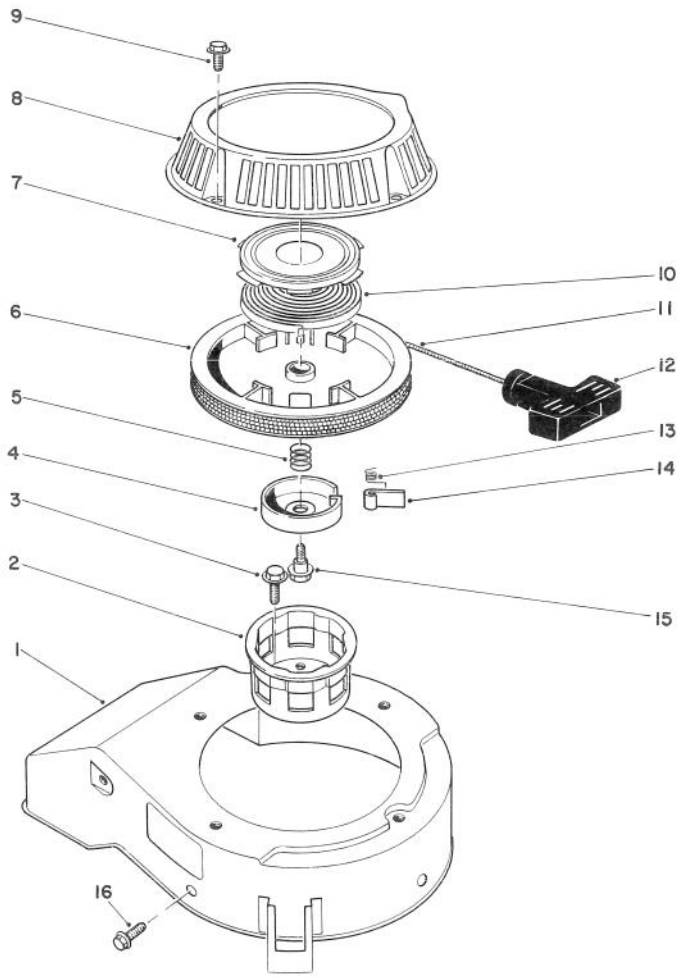

RECOIL ASSEMBLY

Ref. No.	Part No.	Description	No. Used
1	81-2070	Cover — Cooling Fan	1
2	81-1290	Cup — Starter Pulley	1
3	81-1300	Bolt (16 mm Lg.)	3
4	81-1250	Retainer — Dog	1
5	81-1240	Spring — Compression	1
6	81-1210	Reel — Rope Pulley	1
7	81-1640	Retainer — Recoil Spring	1
8	81-2090	Case — Recoil	1
9	81-1280	Bolt (10 mm Lg.)	4
10	81-1200	Spring — Recoil	1
11	81-1270	Rope	1

Ref. No.	Part No.	Description	No. Used
12	81-1630	Handle — Recoil	1
13	81-1220	Spring — Dog	1
14	81-1230	Dog	1
15	81-1260	Bolt — Shoulder	1
16	81-1170	Bolt — Self Tapping (15 mm Lg.)	3
*	47-2480	Stop — Rope	1
*	81-2040	Starter Assembly (Incl. Ref. #4-8, 10-15)	1
*	81-2300	Spring & Retainer (Incl. Ref. #7 & 10)	1

*Not Illustrated

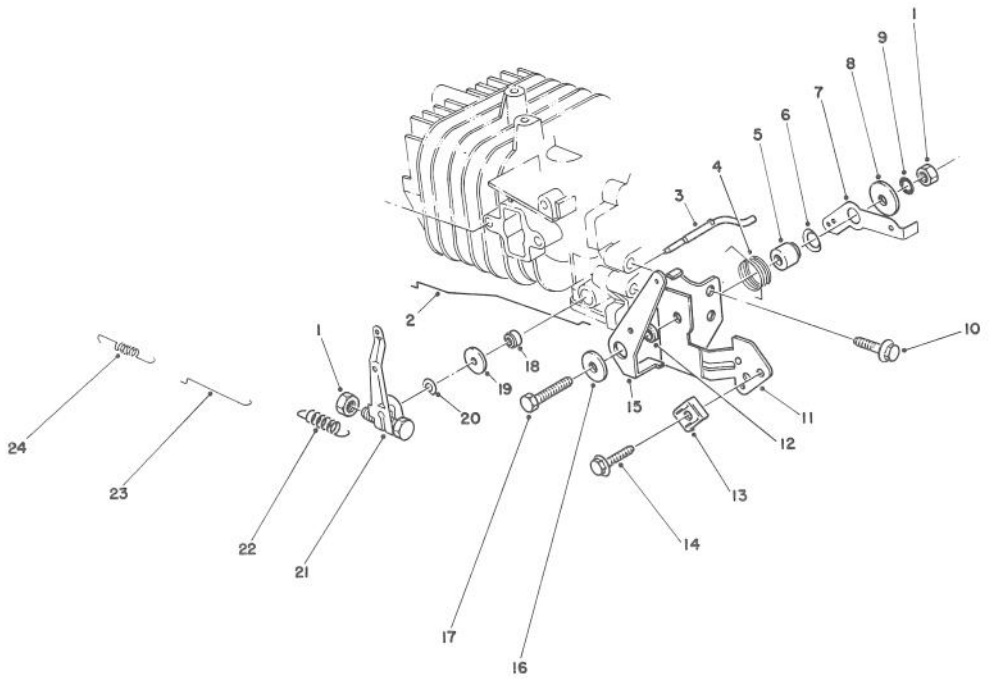

GOVERNOR ASSEMBLY

Ref. No.	Part No.	Description	No. Used
1	81-0900	Nut	2
2	81-1720	Rod — Choke	1
3	81-0840	Shaft — Governor	1
4	81-2460	Spring — Choke Control Lever	1
5	81-1770	Spacer — Governor Spring Lever	1
6	81-1820	Washer — Governor Spring Lever	1
7	81-2850	Lever — Governor Spring	1
8	81-1750	Washer — Choke Control Lever	1
9	81-1450	Washer — Lock	1
10	81-1170	Bolt — Self Tap (15 mm Lg.)	1
11	81-2420	Bracket — Throttle Control	1
12	81-2470	Spacer — Choke Control Lever	1

Ref. No.	Part No.	Description	No. Used
13	81-2430	Clamp — Cable	1
14	50-0130	Bolt — Cable Clamp	1
15	81-1710	Lever — Choke Control	1
16	50-0760	Washer — Choke Control Lever	1
17	81-1730	Bolt — Throttle Control Bracket	1
18	81-0850	Oil Seal — Governor Shaft	1
19	81-0860	Washer	1
20	81-0870	E-Ring	1
21	81-2840	Governor Arm/Bolt Assembly	1
22	81-2830	Spring — Governor	1
23	81-0910	Rod — Carburetor	1
24	81-0920	Spring — Carburetor Rod	1

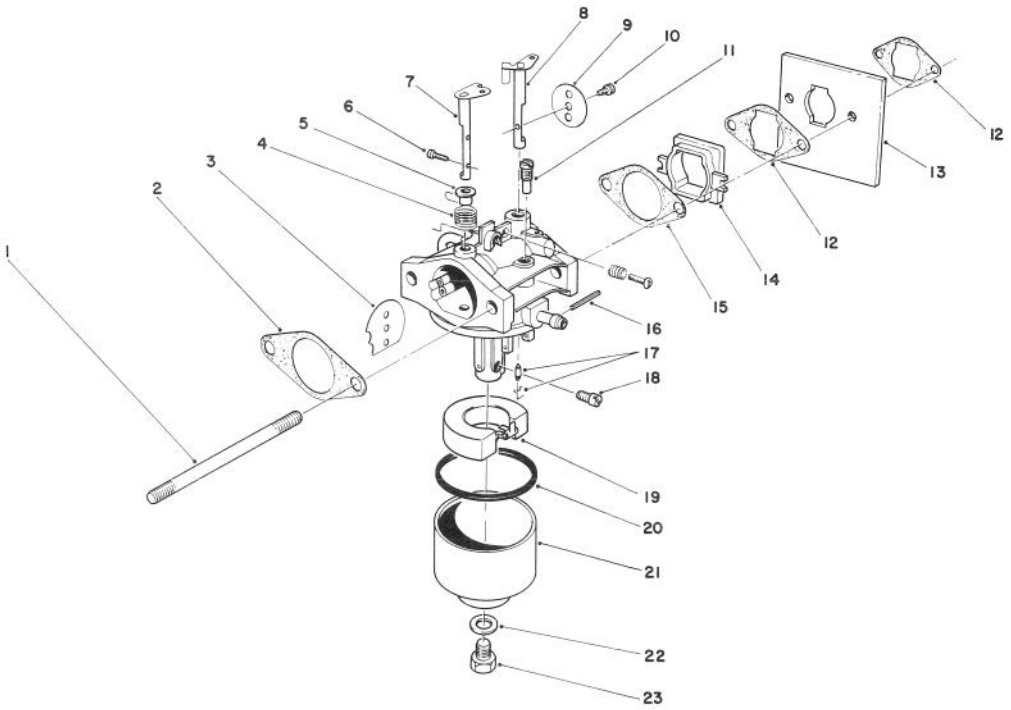

CARBURETOR ASSEMBLY

Ref. No.	Part No.	Description	No. Used
1	81-2240	Stud Bolt — Carburetor	2
2	81-0090	Gasket	1
3	81-0240	Valve — Choke	1
4	81-0230	Spring — Choke	1
5	81-0220	Bushing — Choke Valve	1
6	81-2160	Screw	2
7	81-1950	Shaft — Choke	1
8	81-0250	Shaft — Throttle	1
9	81-0260	Valve — Throttle	1
10	81-0270	Screw — Throttle Valve	1
11	81-1030	Jet — Pilot # (40)	1
12	81-2320	Gasket — Shield	2
13	81-2330	Shield — Carburetor	1
14	81-2190	Insulator — Carburetor	1
15	81-0780	Gasket	1

Ref. No.	Part No.	Description	No. Used
16	81-0980	Pin	1
17	81-1600	Needle Valve/Spring Wire	1
18	81-1940	Jet — Main # (76.3)	1
*	81-2340	Jet Main # (72.5) High Alt., Above 6,000 Ft. (Optional)	1
19	81-0970	Float	1
20	81-1010	Gasket — Float Bowl	1
21	81-1610	Bowl — Float	1
22	81-1020	Gasket — Bowl Screw	1
23	81-1000	Screw — Bowl	1
*	81-1960	Carburetor Kit (Incl. Ref. #2, 15, 17, 20 & 22)	1
*	81-1930	Carburetor Assembly — Complete	1

*Not Illustrated

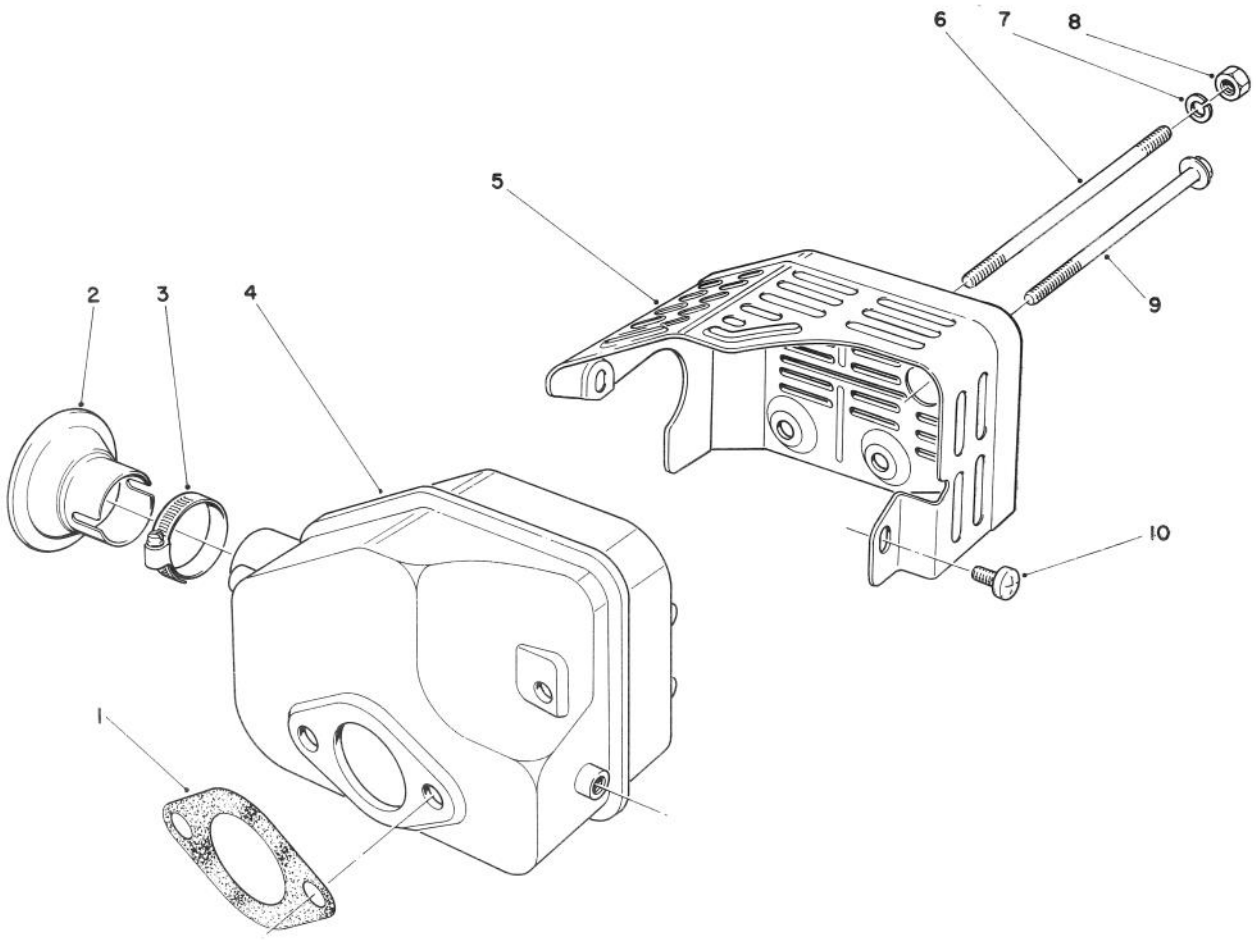

MUFFLER ASSEMBLY

Ref. No.	Part No.	Description	No. Used
1	81-1080	Gasket — Muffler	1
2*	81-0200	Spark Arrester	1
3*		Clamp	1
4	81-1090	Muffler	1
5	81-2450	Cover — Muffler	1

Ref. No.	Part No.	Description	No. Used
6	81-1100	Bolt	2
7	81-1120	Washer — Lock	2
8	81-1110	Nut	2
9	81-1150	Bolt — Self Tapping	1
10	81-1140	Screw — Phillips Hd.	2

*Optional Equipment

PRODUCT CHANGES

In an effort to make improvements available to TORO owners as quickly as possible, minor changes are incorporated into Toro's products from time to time that do not become immediately shown in the Parts Catalog. If such a change apparently has been made in your unit, which is not reflected in your manual, see your TORO Distributor or his Authorized TORO Service Dealer for information and part numbers.

IDENTIFICATION AND ORDERING

MODEL AND SERIAL NUMBERS

The Mower has two identification numbers: a model number and a serial number. The two numbers are stamped on a decal which is located on the mower housing between the rear wheels. In any correspondence concerning the mower, supply model and serial numbers to assure that correct information and replacement parts are obtained.

To order replacement parts from an Authorized TORO Service Dealer, supply the following information:

1. Model and serial numbers of the mower.
2. Part number, description, and quantity of part(s) desired.

Note: Do not order by reference number if a parts catalog is being used; use the PART NUMBER.

The Toro Promise

A TWO YEAR LIMITED WARRANTY
On All
Gasoline Powered Consumer Products

The Toro Company promises to repair your TORO Product if defective in materials or workmanship. The following time periods from the date of purchase apply:

Residential Product ..... 2 Years
Residential Products Used Commercially... 45 Days

The costs of parts and labor are included, but the customer pays the transportation costs. Just return any residential product to an Authorized TORO Service Dealer or TORO Distributor.

Should you feel your TORO Product is defective and wish to rely on The Toro Promise, the following procedure is recommended:

1. Contact any Authorized TORO Service Dealer, TORO Master Service Dealer, or TORO Distributor (the Yellow Pages of your telephone directory is a good reference source).
2. He will either instruct you to return the product to him or recommend another Authorized TORO Service outlet which might be more convenient.
3. Bring the product along with your original sales slip, or other evidence of purchase date, to the service dealer.
4. The servicing dealer will inspect the unit, advise you whether the product is defective and, if so, make all repairs necessary to correct the defect without extra charge to you.

If for any reason you are dissatisfied with the dealer's analysis of the defect or the service performed, you may contact us.

Write:

TORO Consumer Service Department
8111 Lyndale Avenue South
Minneapolis, Minnesota 55420

The above remedy of product defects through repair by an Authorized TORO Service Dealer is the purchaser's sole remedy for any defect.

THERE IS NO OTHER EXPRESS WARRANTY. ALL IMPLIED WARRANTIES OF MERCHANTABILITY AND FITNESS FOR USE ARE LIMITED TO THE DURATION OF THE EXPRESS WARRANTY.

Some states do not allow limitations on how long an implied warranty lasts, so the above limitation may not apply to you.

This warranty applies only to parts or components which are defective and does not cover repairs necessary due to normal wear, misuse, accidents, or lack of proper maintenance. Regular, routine maintenance of the unit to keep it in proper operating condition is the responsibility of the owner.

All warranty repairs reimbursable under The Toro Promise must be performed by an Authorized TORO Service Dealer using Toro approved replacement parts.

Repairs or attemped repairs by anyone other than an Authorized TORO Service Account are not reimbursable under The Toro Promise. In addition, these unauthorized repair attempts may result in additional malfunctions, the correction of which is not covered by warranty.

THE TORO COMPANY IS NOT LIABLE FOR INDIRECT, INCIDENTAL OR CONSEQUENTIAL DAMAGES IN CONNECTION WITH THE USE OF THE PRODUCT INCLUDING ANY COST OR EXPENSE OF PROVIDING SUBSTITUTE EQUIPMENT OR SERVICE DURING PERIODS OF MALFUNCTION OR NON-USE.

Some states do not allow the exclusion or limitation of incidental or consequential damages, so the above limitation or exclusion may not apply to you.

This warranty gives you specific legal rights, and you may also have other rights which vary from state to state.

Compliance with Radio Interference Regulations Certified.
Certifie Conforme au Reglement sur le Brouillage Radioelectrique.