Form No. 3352–348

Four Wheel Drive Kit

Reelmaster® 5200, 5400 & 5500

Model No. 03539

Installation Instructions

Note: Determine the left, right, front, and rear sides of the machine while seated in the normal operating position.

Loose Parts

Note: Use the chart below to identify parts for assembly.

DESCRIPTION	QTY.	USE
Capscrew, 1/2 x 1–1/4 in. Locknut, 1/2	6 6	Mount rear axle stops
Flatwasher, 2.50 O.D. x 1.406 I.D. x .018 thk. Washer, 2.50 O.D. x 1.406 I.D. x .032 thk. Cylinder support Shims Capscrew, M10 x 35mm Steering cylinder Shims Cylinder pin Self tapping screw Capscrew, 3/4 x 2–1/8 in. Thrust washers Wheel nut Cable tie	3 2 1 2 4 1 2 1 1 1 2 10 1	
Cable tie Decal	2 1	
Traction shaft Bearing assembly Bearing bracket Carriage bolt, 5/16 x 1–1/4 in. Locknut, 5/16 Socket head screw, 3/8 x 3/4 in. Capscrew, M8 x 25mm Lockwasher, M8 Flatwasher, M8 Shims Locking collar	1 1 1 3 3 1 1 1 1 2 1	
Seat belts Capscrew, 7/16 x 1 in. Lockwasher, 7/16	1 2 2	
Roll bar assembly Capscrew, 1/2 x 1–1/4 in. Flatwasher, 1/2 in. Lockwasher, 1/2 in. Hose clamp, R.H. Hose clamp, L.H	1 6 6 6 1 1	

© 2005 by The Toro Company
8111 Lyndale Avenue South
Bloomington, MN 55420-1196

All Rights Reserved
Printed in the USA

DESCRIPTION	QTY.	USE
Decals	2	
Installation instructions Parts catalog	1 1	Read before installing the kit.

Installation

Remove Old Axle

1. Block front tires and jack up rear of machine until there is approximately one inch clearance between rear tires and ground. **Securely Block Frame** and remove rear wheels.
2. Thoroughly clean around hydraulic hose connections to steering cylinder and disconnect hoses from cylinder. Make sure to mark or identify hose from rod end of cylinder.
3. Remove jam nut and washer from pivot pin securing axle to axle support (Fig. 1).
4. Pull pivot pin out of axle support, allowing axle to be lowered to floor and removed.

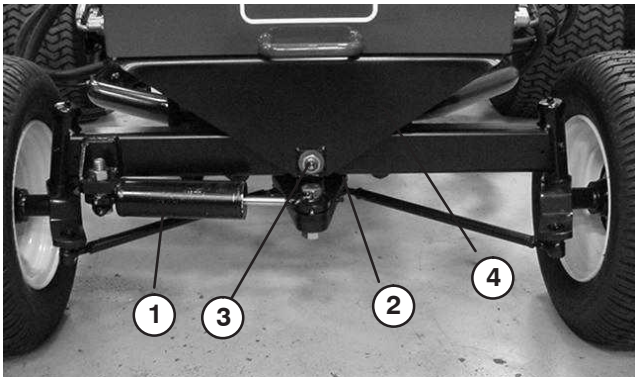

Figure 1

1. Steering cylinder
2. Pivot pin
3. Jam nut & capscrew
4. Axle support

Mount Rear Axle Stops

1. Mount an axle stop to each side of rear frame member with (3)1/2 x 1–1/4" lg. capscrews and locknuts. Position stops as shown in figure 2.

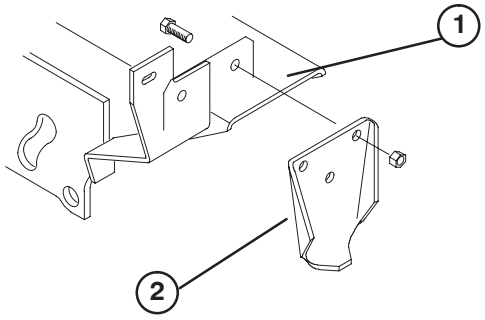

Figure 2

1. Frame
2. Axle stop

Install New Axle

1. Mount new axle to axle support with new washers and pivot pin previously removed (Fig. 3 & 4). Install pivot pin from front of axle support. Washers to be positioned between front and rear of axle and axle support as shown in figure 3. One or two of each washer may be required between front of axle and axle support.
2. Secure pivot pin to axle support with jam nut and washer previously removed. Apply medium strength Loctite to jam nut before installing.

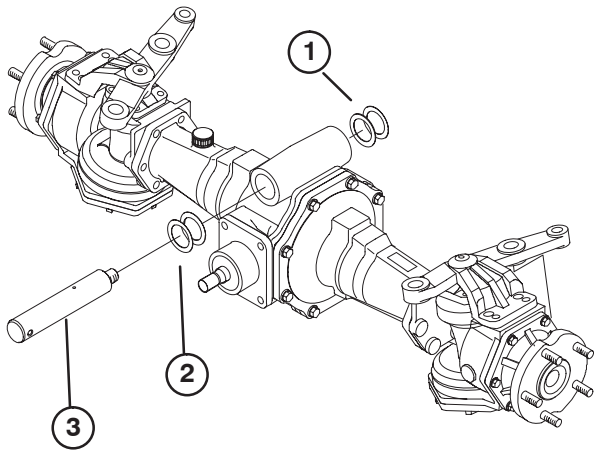

Figure 3

1. Flatwasher, 2.50 O.D. x 1.406 I.D. x.018 thk.
2. Washer, 2.50 O.D. x 1.406 I.D. x.032 thk.
3. Pivot pin

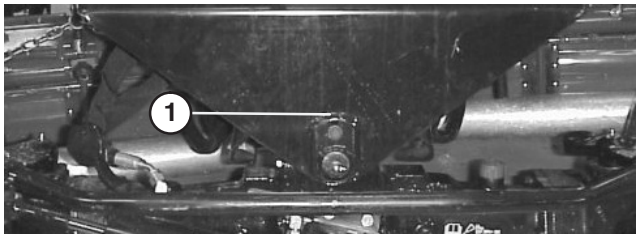

Figure 4

1. Rear of axle support

3. Secure rod end of steering cylinder to steering arm with a ball joint and slotted nut as shown in figure 5. Apply medium strength blue Loctite to nut before assembly. Tighten nut to 130–150 ft–lb. Secure with cotter pin.

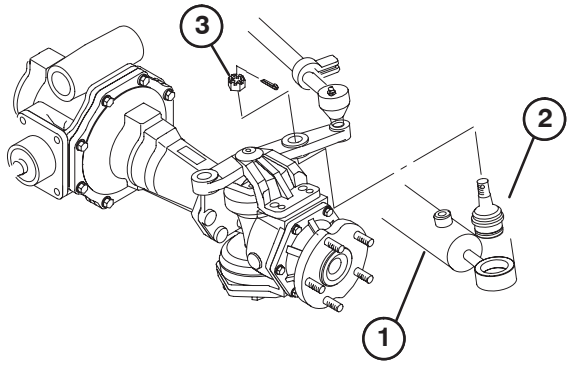

Figure 5

1. Steering cylinder
2. Ball joint
3. Slotted nut & cotter pin

Important If steering cylinder is ever removed, make sure medium strength blue Loctite is applied to nut before assembly and nut is torqued to 130–150 ft–lb.

4. Connect hydraulic hoses to steering cylinder. Check for binding in hoses by pivoting axle up and down until it contacts stops. Secure hoses together with a cable tie. Rod end hose, previously marked, must connect to rod end of cylinder.

5. Mount wheels to axle hubs with wheel nuts (5 each) (Fig. 6). Torque wheel nuts to 45–50 ft–lbs.

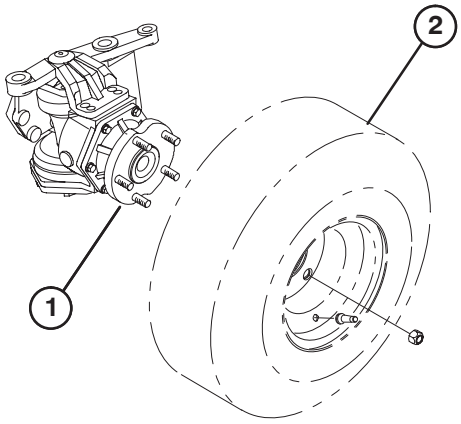

Figure 6

1. Axle hub
2. Wheel

Install Drive Shaft

1. Apply medium strength Loctite to coupler output shaft on rear of hydrostat (Fig. 7).

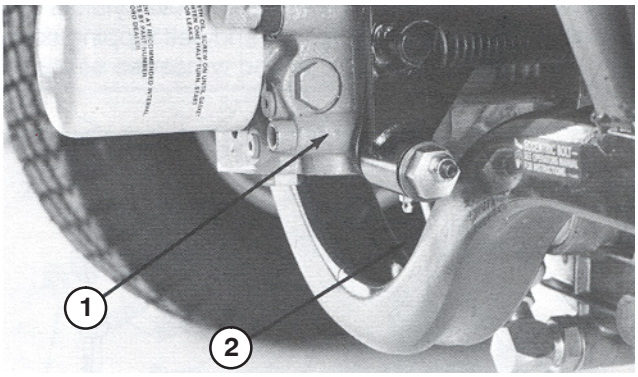

Figure 7

1. Hydrostat
2. Coupler shaft location

2. Slide traction shaft through bearing bracket, aligning the (2) bearing bracket mounting holes with the holes in side and bottom of hydrostat (Fig. 8).

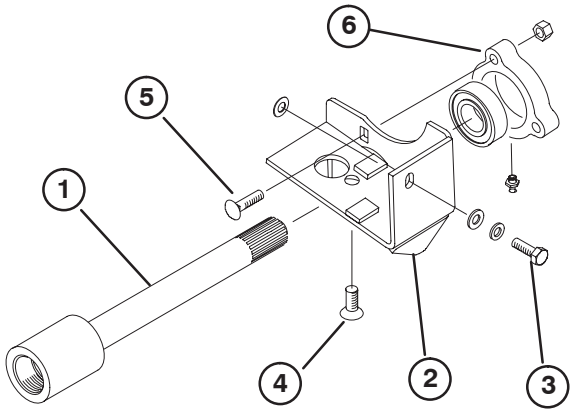

Figure 8

1. Traction shaft
2. Bearing bracket
3. Capscrew, M8 x 25mm
4. Socket head screw
5. Carriage bolt
6. Bearing assembly

3. Mount side of bracket to hydrostat with a M8 x 25 mm capscrew, m8 lockwasher, M8 flat washer and 1 or 2 shims (Fig. 8).

Note: Top carriage bolt (Fig. 8) must be installed.

4. Mount bottom of bearing bracket to hydrostat with a 3/8 x 3/4" lg. socket head screw (Fig. 8).

Note: Determine whether 1 or 2 shims are required between bracket and hydrostat before tightening any fasteners. After shim(s) are in position on capscrew, tighten socket head bolt and capscrew.

5. Thread traction shaft (Fig. 8) (left hand thread) onto coupler output shaft and tighten. Using an open end torque wrench, on the square shaft of the drive shaft assembly, torque the traction shaft (counter–clock wise) to 110–120 ft/lb.

6. Mount bearing assembly to bearing bracket with (3) 5/16 x 1–1/4" lg. carriage bolts and 5/16 – 18 locknuts, as shown in figure 9.

7. Tighten lock nuts, securing bearing to bracket.

8. Slide locking collar onto traction shaft. Rotate locking collar in a clockwise direction, as viewed from the rear of machine. Tighten collar onto shaft by carefully rotating it with a hammer and punch. Tighten set screw.

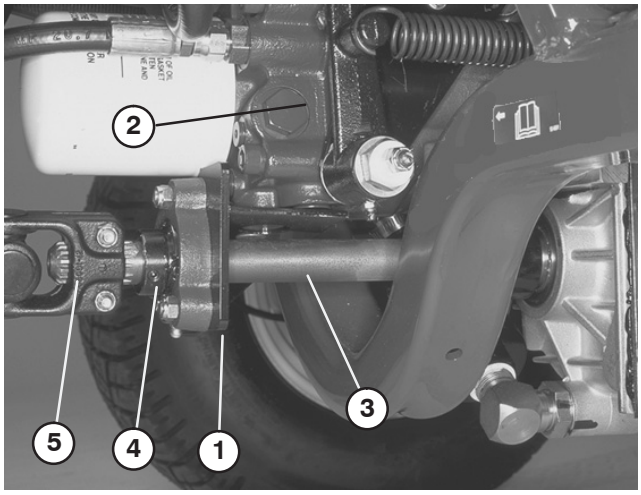

Figure 9

1. Bearing bracket
2. Hydrostat
3. Traction shaft
4. Locking collar
5. Yoke end of drive shaft

9. Remove protective cover from coupler input shaft at front of rear axle. Clean any grease from shaft.

10. Apply never–seize to the splines of traction shaft and axle input shaft.

11. Slide clutch end of drive shaft onto rear axle shaft spline (Fig. 10).

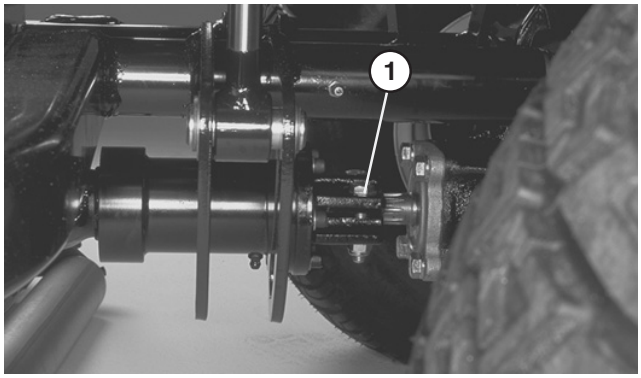

Figure 10

1. Clutch end of drive shaft

12. Tighten (2) capscrews and locknuts securing coupling to shaft (Fig. 10).

13. Slide yoke end of drive shaft onto traction shaft spline (Fig. 10).

14. Tighten (2) cap screws and locknuts securing yoke to shaft.

15. Remove blocks from under machine frame and lower machine to floor.

Install Seat Belts To Seat

1. Install seat belt to holes in back of seat with (2) 7/16 x 1" lg. capscrews and 7/16 lockwashers. Tighten securely. Latch side of belt to be mounted to left side of seat (Fig. 11).

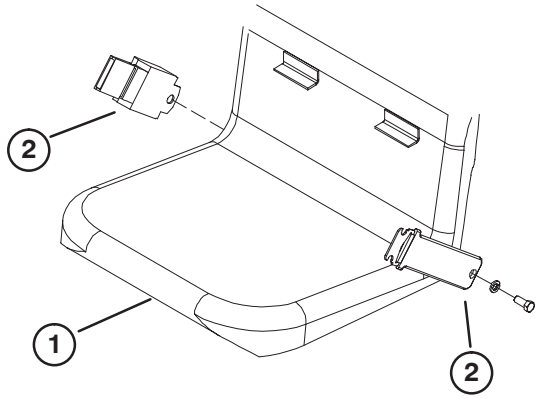

Figure 11

1. Seat
2. Seat belts

Note: When operating machine, always use the seat belt and ROPS together.

Install Roll Bar

1. On Reelmaster 5500 models equipped with cutting unit baskets, the side cutting unit tipper brackets (Fig. 12) must be removed and re–installed with roll bar. Refer to Installation Instructions for Basket Tipper Kit.

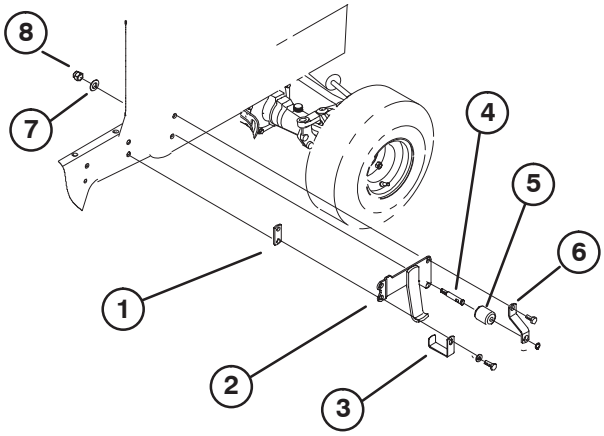

Figure 12

1. Spacer
2. L.H. tipper bracket
3. Hose clamp
4. Roller pin
5. Reel roller
6. Roller bracket
7. Flatwasher
8. Locknut

2. Lower roll bar onto frame, aligning mounting holes in sides and front of machine.

Note: On Reelmaster 5500 models, hose clamps must be removed from each side of machine and replaced with the new left and right hose clamps when installing the roll bar.

3. Secure each side of roll bar to frame with (3) 1/2 x 1–1/4'' lg. capscrews, 1/2" flatwashers and 1/2" lockwashers (Fig. 13).

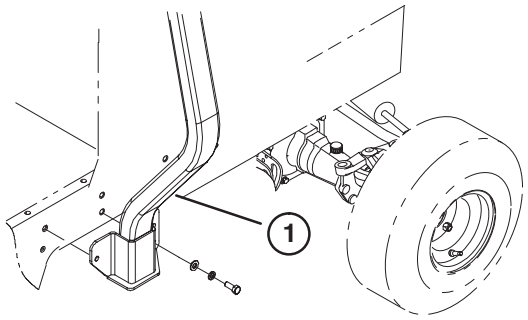

Figure 13

1. Side of roll bar

Note: On Reelmaster 5500 models, mount hose clamps on top of roll bar using rear bottom hole (Fig. 14).

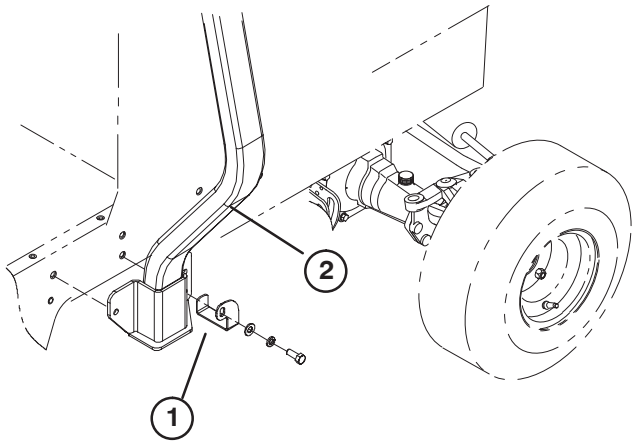

Figure 14

1. Hose clamp (L.H.)
2. ROPS

Note: When operating machine, always use the seat belt and ROPS together.

Install Decals

1. Using dimensions shown in figure 15, locate and mount a decal on side of tool box and side of control box.

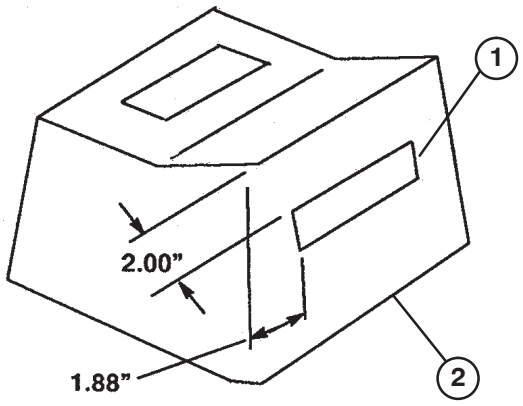

Figure 15

1. Decal
2. Control box

Before Operating

Check Rear Axle Lubricant

The rear axle has three separate reservoirs which use SAE 80W-90 wt. gear lube. Although the axle is shipped with lubricant from the factory, check the level before operating the machine.

1. Position the machine on a level surface.
2. Remove check plugs (3) from axle and make sure lubricant is up to bottom of each hole (Fig. 16 & 17).
3. If level is low, remove center fill plug and add enough lubricant to bring the level up to the bottom of the center check plug hole.
4. Remove each end check plug and add enough lubricant to bring the level up to the bottom of each check plug hole.
5. Install all plugs.

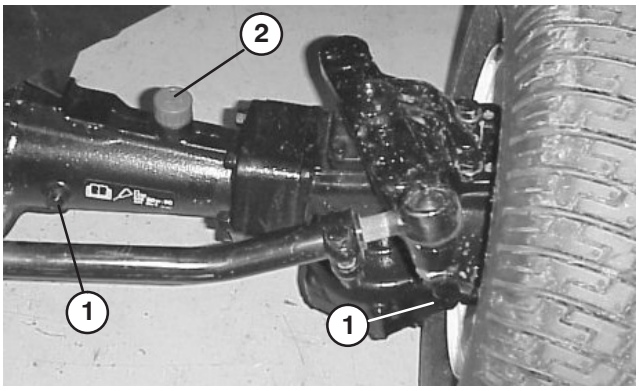

Figure 16

1. Check plug
2. Fill plug

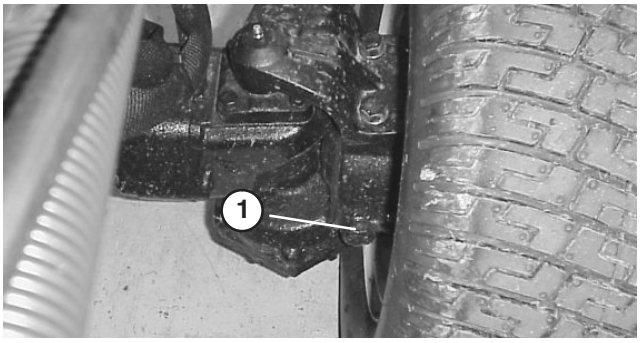

Figure 17

1. Left check plug (rear of axle0

Lubrication

Greasing Bearings And Bushings

The machine has grease fittings that must be lubricated regularly with No. 2 General Purpose Lithium Base Grease. If machine is operated under normal conditions, lubricate all bearings and bushings after every 50 hours of operation. Lubricate bearings and bushings immediately after every washing, regardless of the interval listed.

The grease fitting locations and quantities are: Engine Drive shaft (3), (Fig. 18); Drive shaft clutch (1) (Fig. 19); Rear axle tie rod (2), Steering cylinder ball joints (2), Axle steering pivots (2) Rear axle pivot (1) (Fig. 20); Drive shaft support bearing (1), Rear axle drive shaft (3) (Fig. 21).

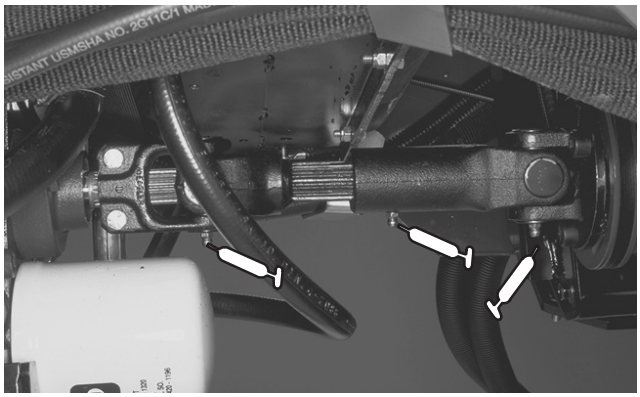

Figure 18

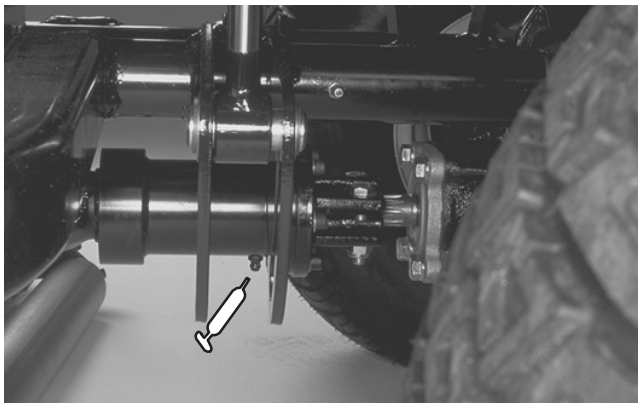

Figure 19

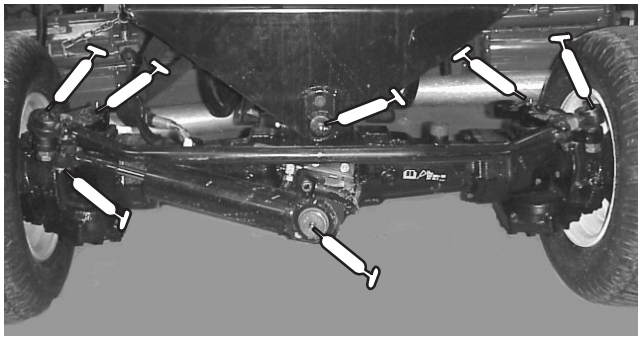

Figure 20

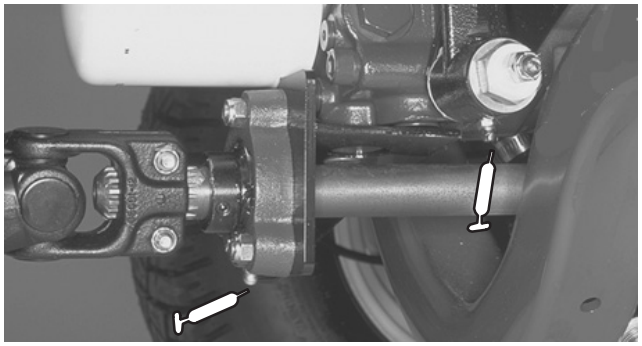

Figure 21

Maintenance

Changing Rear Axle Lubricant

After every 800 hours of operation the oil in the rear axle must be changed.

1. Position machine on a level surface.
2. Clean area around the drain plugs (Fig. 22).
3. Remove plugs allowing oil to drain into drain pans.
4. **After oil is drained, apply thread locking compound on drain plug threads and reinstall in axle.**

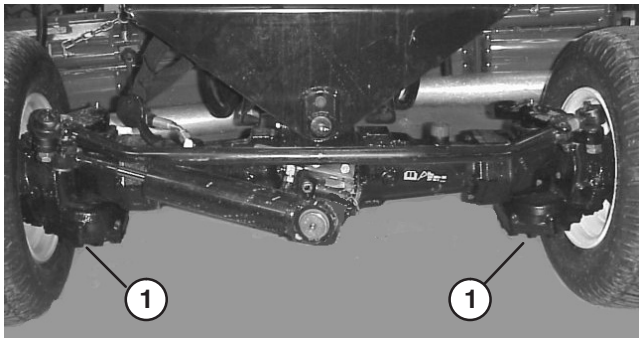

Figure 22

1. Drain plugs

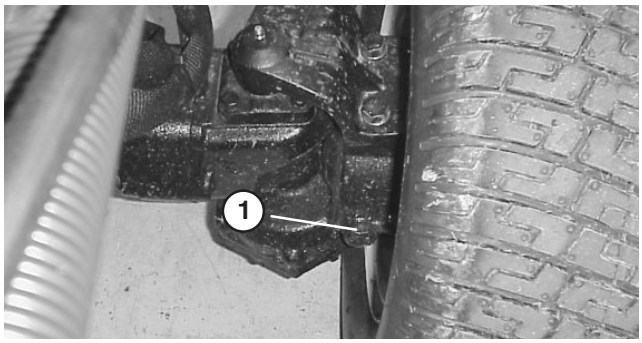

Figure 23

1. Left check plug (rear of axle)

5. Fill axle with lubricant; refer to Check Rear Axle Lubricant, page 6.

Rear Wheel Toe-in

After every 800 operating hours or annually, check rear wheel toe-in.

1. Measure center-to-center distance (at axle height) at front and rear of steering tires. Front measurement must be within ±1/8 in. of the rear measurement.

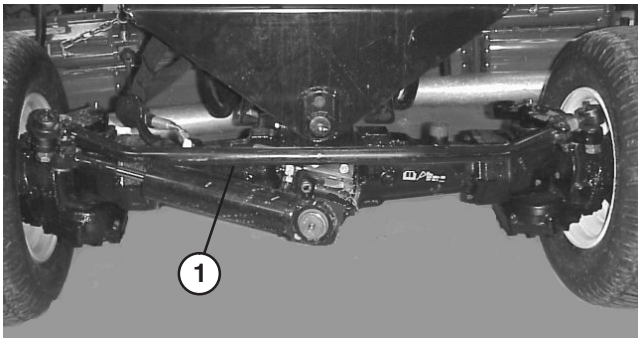

Figure 24

1. Tie rod

2. To adjust, loosen clamps at both ends of tie rod.
3. Rotate tie rod to move front of tire inward or outward.
4. Tighten tie rod clamps when adjustment is correct.