Form No. 3352–372

Roll–Over Protection System

Reelmaster 5200–D, 5400–D & 5500–D

Part No. 108–4445

Installation Instructions

Install the Seat Belt

1. Install each end of the seat belt to the holes in the back of the seat with a capscrew and lockwasher. The retractor side of the belt is to be mounted to the left side of the seat. Tighten the capscrews securely.

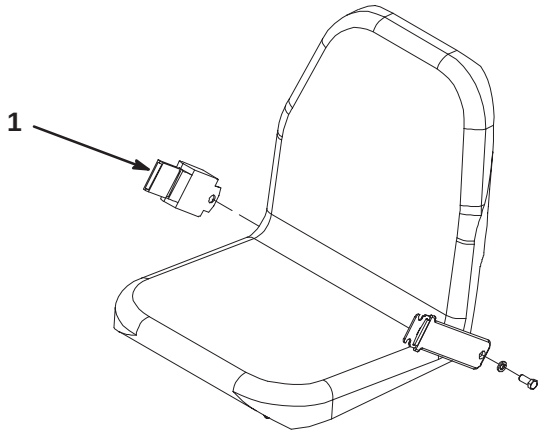

Figure 1

1. Seat belt

Install the ROPS Frame

1. Remove the capscrew, lockwasher and flatwasher securing the hose guide to each side of the machine frame (Fig. 2). Support the hoses when removing the hose guides.

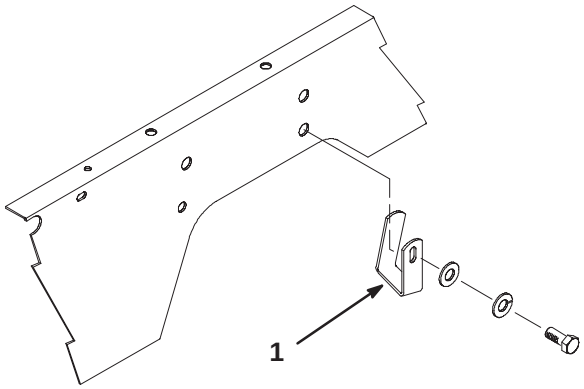

Figure 2

1. Hose guide

2. Lower the ROPS frame over the machine while aligning the mounting holes with the frame mounting holes.

3. Loosely mount the front of each ROPS leg to the frame with a capscrew, flatwasher and a lockwasher (Fig. 3).

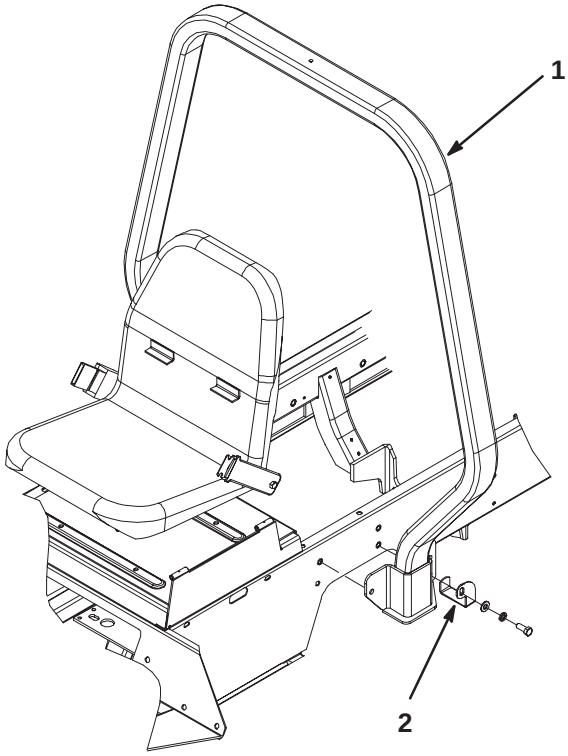

Figure 3

1. ROPS
2. Hose guide

4. Mount the rear of each ROPS leg and a new hose guide to the frame with a capscrew, flatwasher and a lockwasher as shown in figure 3. Torque all the capscrews to 75-85 ft–lbs.

5. Install the hoses onto the hose guides.

Danger

When operating the machine, always use the seat belt and the ROPS together.

© 2004 by The Toro Company
8111 Lyndale Avenue South
Bloomington, MN 55420-1196

All Rights Reserved
Printed in the USA