Form Number 3352-378

Backhoe
Dingo® Compact Utility Loader

Model No. 23160 - 240000146 and up.

Parts Catalog

Ordering Replacement Parts
To order replacement parts, please supply the part number, the quantity, and the description of each part desired.

Understanding Reference Numbers
Each Identified part in an illustration has a reference number. The reference number for a part also appears in the parts list, along with other information about the part.

This catalog uses two special reference number formats, one to indicate parts in a service assembly and another to indicate the quantity of a given part in an illustration.

Service Assembly Reference Numbers
Parts in service assemblies have reference numbers in the form a:b. The a represents the reference number of the entire service assembly and the b represents a sequential number unique to each part within the service assembly.

For example, a wheel assembly might be identified by reference number 6, the tire by 6:1, the valve by 6:2, and the wheel by 6:3. When you order the assembly identified by reference number 6, you receive all parts identified by reference numbers 6:1, 6:2, and 6:3. However, you may also order any part individually. Reference numbers of this type appear in illustrations and in part lists.

Reference Numbers Indicating Quantity
In an illustration, if a reference number indicates more than one part, the reference number has the form nX y. The n represents the quantity of the part, the X is the multiplication symbol, and the y represents the reference number.

For example, in an illustration, the reference number 2X 37 means that two of the parts identified by reference number 37 are indicated.

©The Toro Company - 2004
All Rights Reserved

Contents

Description	Page
Crown Arm and Linkage Assembly	3
Frame, Boom and Stabilizer Assembly	4
Seat and Mounting Assembly	5
Cylinder and Control Assembly	6
Valve Assembly No. 100-7205	7
Hydraulic Assembly	8
Hydraulic Fitting and Tooth Assembly	9

Part Description Abbreviations

Part descriptions in this catalog may include the following abbreviations.

AR	as required
ASM	assembly
CARR	carriage
DEG	degrees
FH	flat head
GA	gauge
HF	hex flange
HH	hex head
HHF	hex head flange
HHFTF	hex head flange thread forming
HJ	hex jam
HLH	hex lag head
HOC	height-of-cut
HS	hex
HSBH	hex socket button head
HSFH	hex socket flat head
HSH	hex socket head
HWH	hex washer head
HWHTF	hex washer head thread forming
HYD	hydraulic
INC	incorporated
LH	left hand
NI	nylon insert
PPH	phillips pan head
PTH	phillips truss head
PTO	power take off
RH	right hand
SFH	slotted fillister head
SHH	slotted hex head
SHWH	slotted hex washer head
SPH	slotted pan head
SQH	square head
SRH	slotted round head
STD	standard
TAP	self tapping
TTH	torx truss head
WH	wing head

Footnotes

❶ Not illustrated

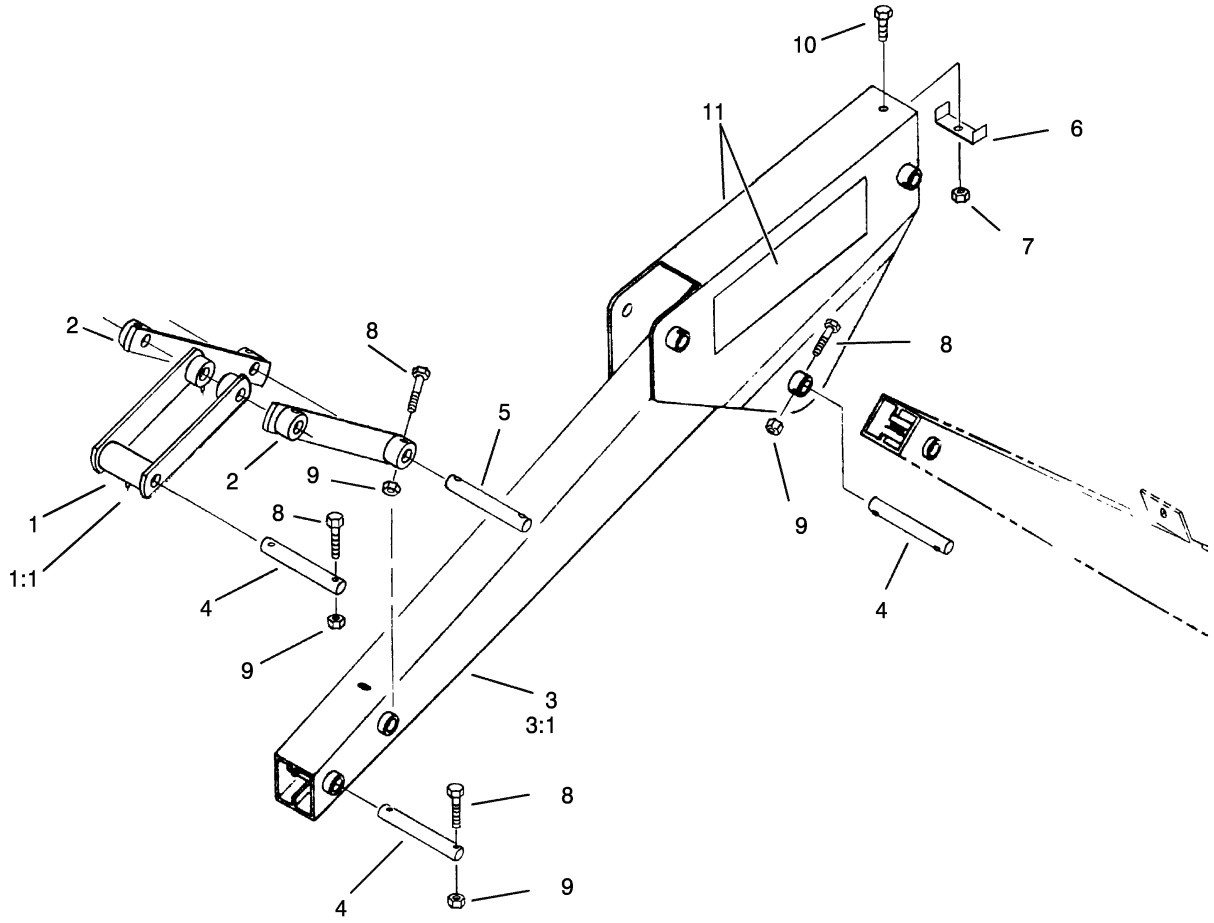

Crown Arm and Linkage Assembly

Ref	Part No.	Qty.	Description
1	100-7163	1	Linkage ASM
1:1	302-19	3	Fitting-Grease
2	100-7160	2	Linkage Strap ASM
3	100-7155	1	Crowd Arm ASM
3:1	302-19	2	Fitting-Grease
4	100-7170	3	Pin-Bucket
5	100-7171	2	Pin-Linkage
6	100-7183	1	Bracket-Hose
7	3296-29	1	Nut-Lock, NI
8	321-33	8	Screw-HH
9	32146-17	8	Nut-Lock
10	322-7	1	Screw-HH
11	62-7400	2	Decal

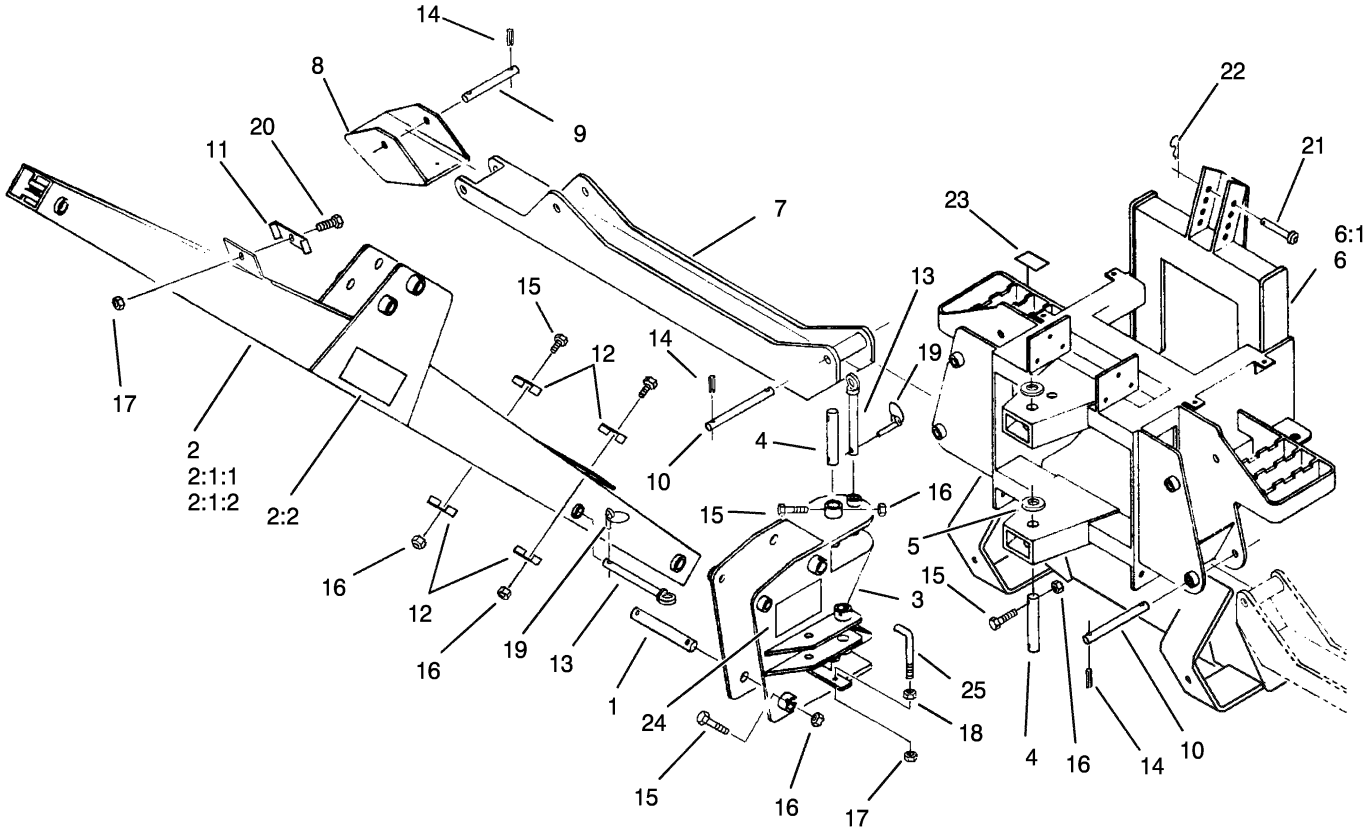

Frame, Boom and Stabilizer Assembly

Ref	Part No.	Qty.	Description
1	100-7170	2	Pin-Bucket
2	100-7215	1	Boom ASM
❶2:1:1	302-19	1	Fitting-Grease
❶2:1:2	302-60	1	Fitting-Grease
2:2	100-4132	2	Decal-Warning
3	100-7156	1	Swivel ASM
4	100-7175	2	Pin-Pivot
5	100-7187	2	Washer-Thrust
6	100-7151	1	Box Frame ASM
❶6:1	302-19	2	Fitting-Grease
7	100-7153	2	Stabilizer ASM
8	100-7161	2	Stabilizer Foot ASM
9	100-7184	2	Pin-Foot, Stabilizer
10	100-7185	4	Pin-Stabilizer
11	100-7183	1	Bracket-Hose
12	100-7182	4	Bracket-Hose
13	100-7164	2	Lock Pin ASM
14	32121-15	16	Pin-Roll
15	321-33	28	Screw-HH
16	32146-17	4	Nut-Lock
17	3296-29	4	Nut-Lock, NI
18	3217-6	2	Nut-Hex
19	283-72	6	Pin-Lynch
20	322-7	1	Screw-HH

Ref	Part No.	Qty.	Description
21	100-7209	1	Pin-Clevis
22	3290-355	1	Pin-Hair
23	100-7263	2	Decal-Warning
24	100-4134	2	Decal-Pin Placement
25	100-7222	2	Bracket-Hose

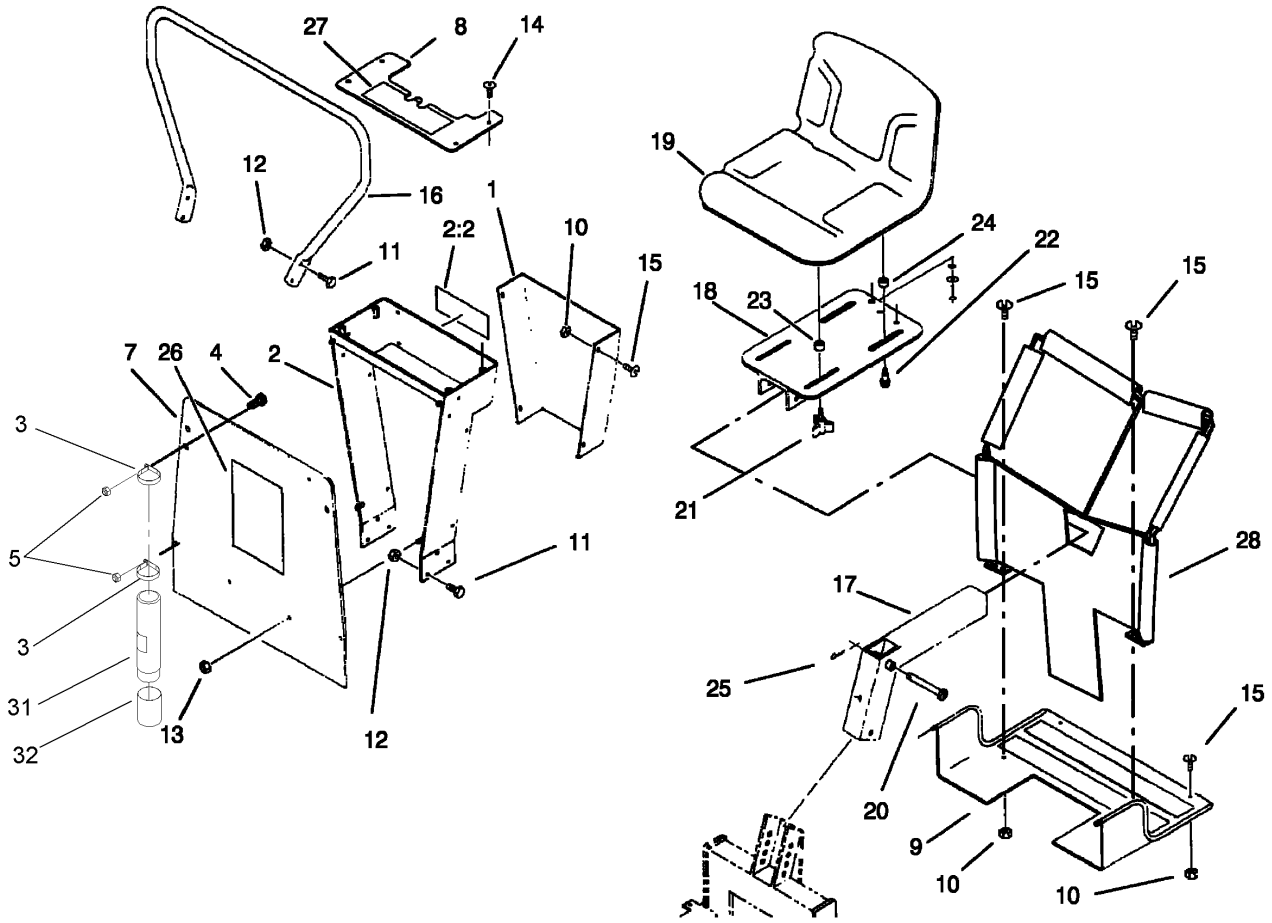

Seat and Mounting Assembly

Ref	Part No.	Qty.	Description
1	100-7166	1	Guard-Hose
2	100-7207	1	Valve Mount ASM
2:2	100-4133	1	Decal-Warning
3	2412-120	2	R-Clamp
4	32104-19	2	Screw
5	3296-2	2	Nut-Lock
7	100-7165	1	Panel-Front
8	100-7169	1	Cover-Valve
9	100-7162	1	Foot Plate ASM
10	32146-17	32	Nut-Lock
11	322-3	10	Screw-HH
12	3296-29	6	Nut-Lock, NI
13	3296-17	4	Nut-Lock, NI
14	3258-2	4	Screw
15	3290-133	8	Screw
16	100-7167	1	Handle-Guard
17	100-7157	1	Seat Mount ASM
18	100-7158	1	Seat Plate ASM
19	88-3950	1	Seat-Medium Back
20	100-7208	1	Pin-Clevis
21	700806	2	Knob
22	92-6986	2	Bolt-Shoulder
23	92-6750	2	Spacer-Nylon
24	109989	2	Spacer-Nylon

Ref	Part No.	Qty.	Description
25	3272-31	1	Pin-Cotter
26	62-7400	1	Decal
27	100-4138	1	Decal-Panel, Control
28	106-7630	1	Backhoe Shield Kit
31	104-7050	1	Housing-Manual
32	104-7048	1	Cap-Housing

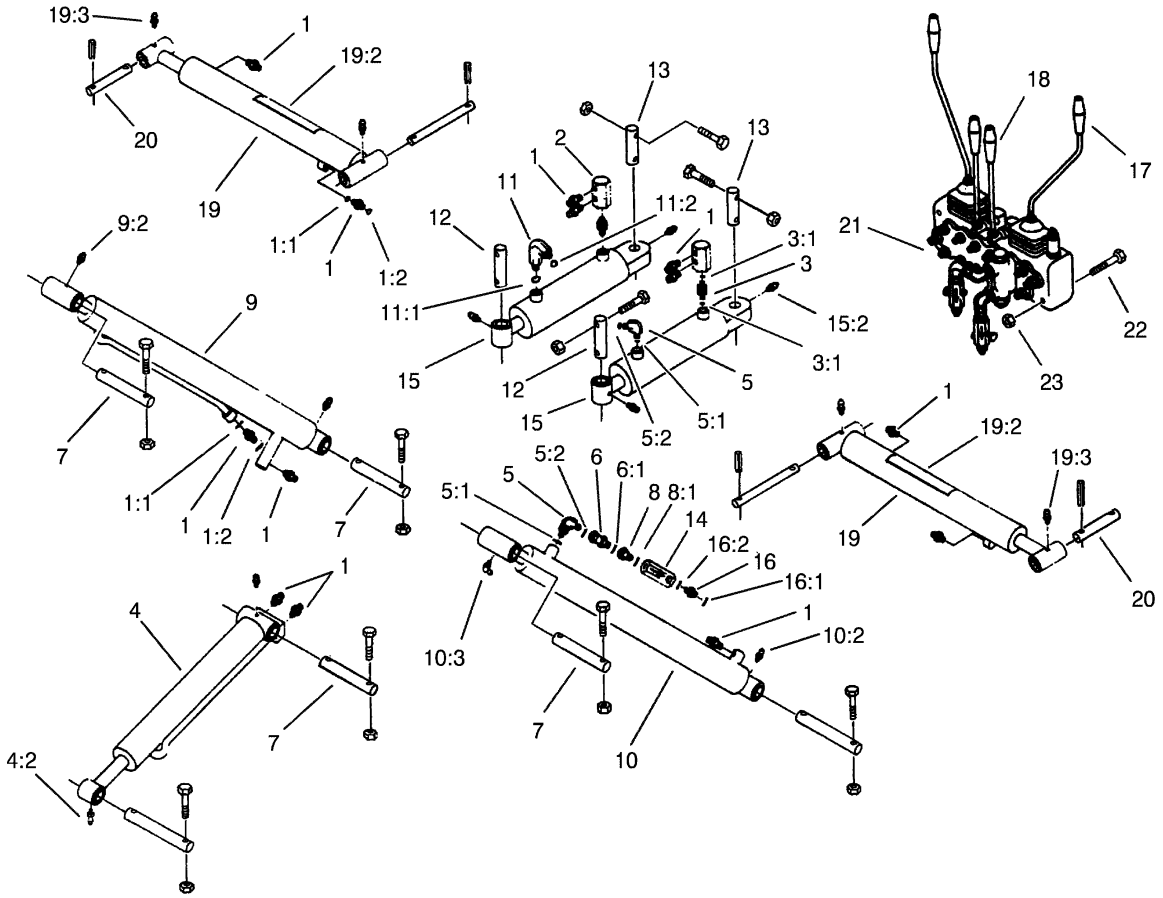

Cylinder and Control Assembly

Ref	Part No.	Qty.	Description
1	340-92	13	Fitting-Hyd, Straight
1:1	237-78	1	O-Ring
1:2	237-21	1	O-Ring
2	100-7178	2	Fitting-Hex
3	93-7597	2	Fitting
3:1	237-78	2	O-Ring
4	100-7204	1	Cylinder-Hyd, Bucket
❶4:1	100-7220	1	Seal Kit
4:2	302-19	2	Fitting-Grease
5	340-132	2	Fitting-Hyd, 90 DEG
5:1	237-78	1	O-Ring
5:2	237-21	1	O-Ring
6	100-7211	1	Fitting-Swivel, Straight
6:1	237-78	1	O-Ring
7	100-7172	4	Pin-Boom
8	100-7216	1	Fitting-Reducer
8:1	237-42	1	O-Ring
9	108-5509	1	Cylinder-Hyd, Crowd Arm
❶9:1	108-5510	1	Seal Kit
9:2	302-19	2	Fitting-Grease
10	100-7203	1	Cylinder-Hyd, Boom
❶10:1	100-7220	1	Seal Kit
10:2	302-19	1	Fitting-Grease
10:3	302-60	1	Fitting-Grease

Ref	Part No.	Qty.	Description
11	100-7213	1	Fitting-90 DEG
11:1	237-78	1	O-Ring
11:2	237-21	1	O-Ring
12	100-7173	2	Pin-Swivel, Front
13	100-7174	2	Pin-Swivel, Rear
14	98-9742	3	Valve-Control, Flow
15	100-7201	2	Cylinder-Hyd, Swing
❶15:1	100-7221	1	Seal Kit
15:2	302-19	2	Fitting-Grease
16	340-1	1	Adapter
16:1	237-21	1	O-Ring
16:2	237-42	1	O-Ring
17	100-7168	2	Bent Handle ASM
18	100-7206	2	Straight Handle ASM
19	100-7217	2	Stabilizer Cylinder ASM
❶19:1:1	100-7220	1	Seal Kit
19:2	100-4136	1	Decal-Warning
19:3	302-19	2	Fitting-Grease
20	100-7186	2	Pin-Cylinder, Stabilizer
21	100-7205	1	Valve ASM
22	322-12	3	Screw-HH
23	3296-29	3	Nut-Lock, NI

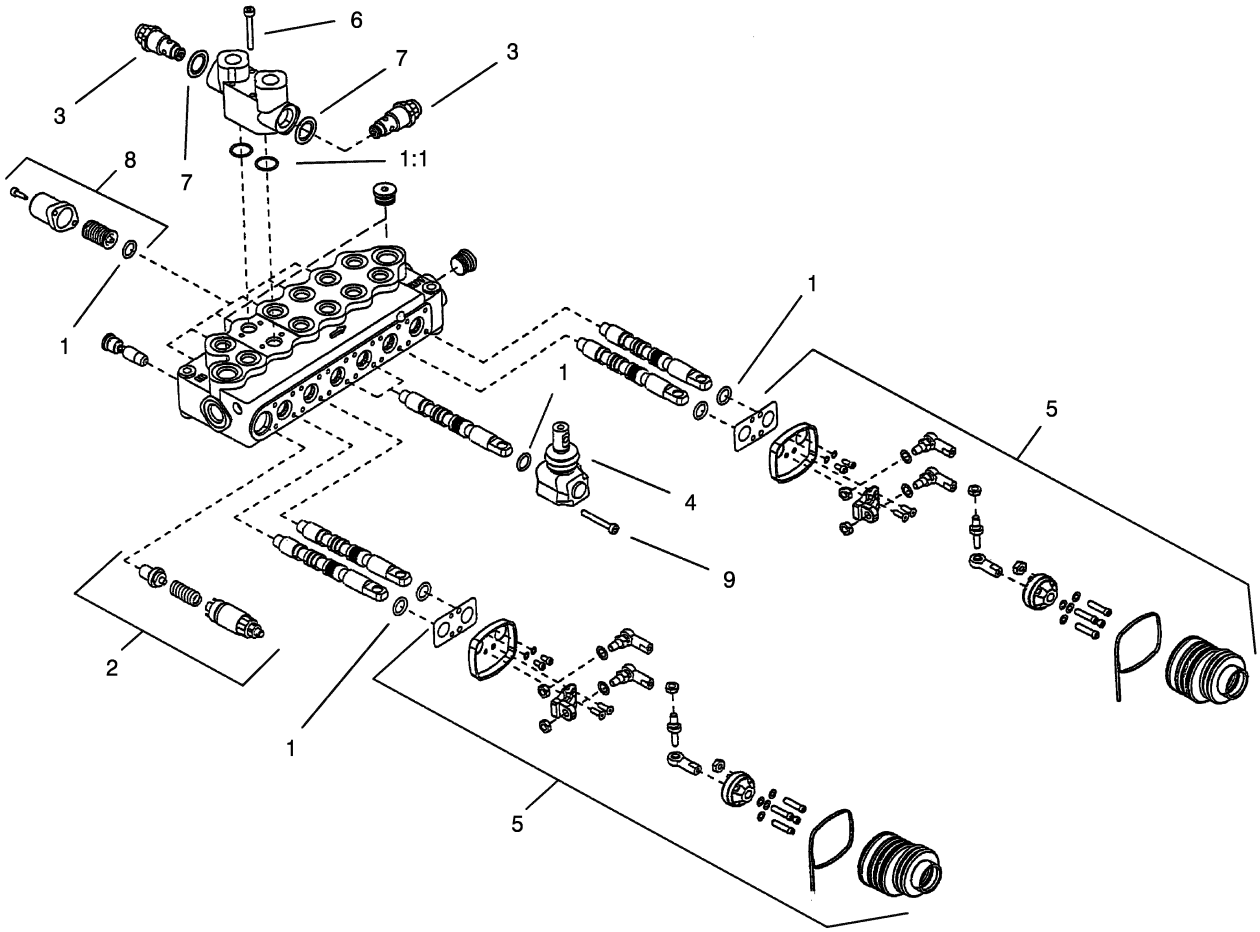

Valve Assembly No. 100-7205

Ref	Part No.	Qty.	Description
1	100-7226	1	Valve Seal Kit
1:1	100-7246	2	O-Ring
❶1:2	100-7247	1	Walvoil Valve Seal Kit
2	100-7227	1	Relief Valve Kit
3	100-7228	2	Cartridge-Relief
4	100-7229	2	Lever Kit
5	100-7230	2	Joystick Kit
6	100-7231	4	Screw
7	100-7232	2	Washer
8	100-8801	6	High Force Spring Kit
9	100-8806	4	Screw

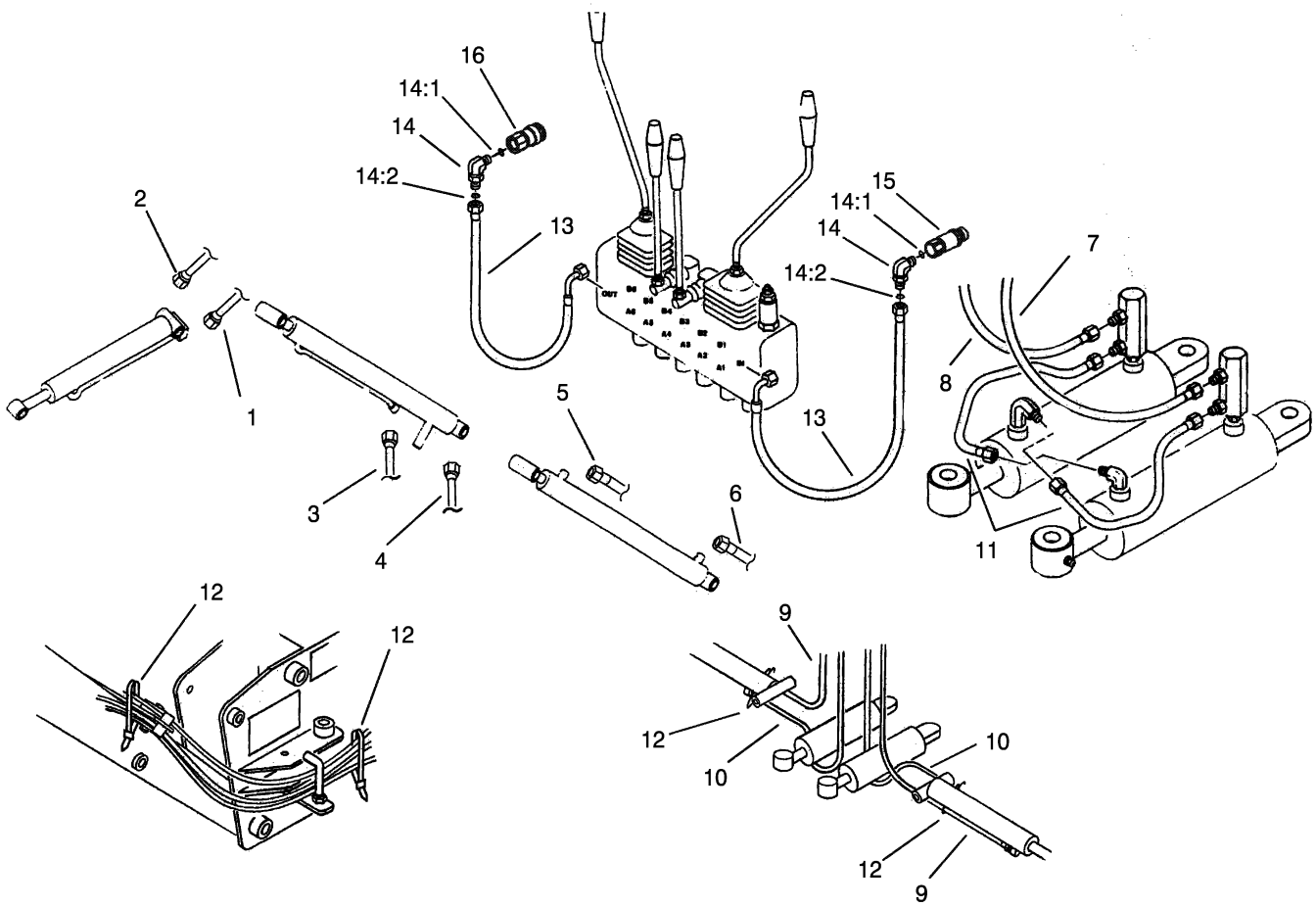

Hydraulic Assembly

Ref	Part No.	Qty.	Description
1	100-7188	1	HYD Hose ASM
2	100-7189	1	HYD Hose ASM
3	100-7190	1	HYD Hose ASM
4	100-7191	1	HYD Hose ASM
5	100-7192	1	HYD Hose ASM
6	100-7193	1	HYD Hose ASM
7	100-7194	1	HYD Hose ASM
8	100-7195	1	HYD Hose ASM
9	100-7196	2	HYD Hose ASM
10	100-7197	2	HYD Hose ASM
11	100-7198	2	HYD Hose ASM
12	3334-945	6	Tie-Cable
13	105-4147	2	HYD Hose ASM
14	340-105	2	Fitting-Hyd, 90 DEG
14:1	237-80	1	O-Ring
14:2	237-30	1	O-Ring
15	100-4701	1	Nipple-Connect, Pressure
❶15:1	100-6120	1	Seal Kit
16	104-6134	1	Coupler-Face, Flush
❶16:1	105-8396	1	Seal Kit

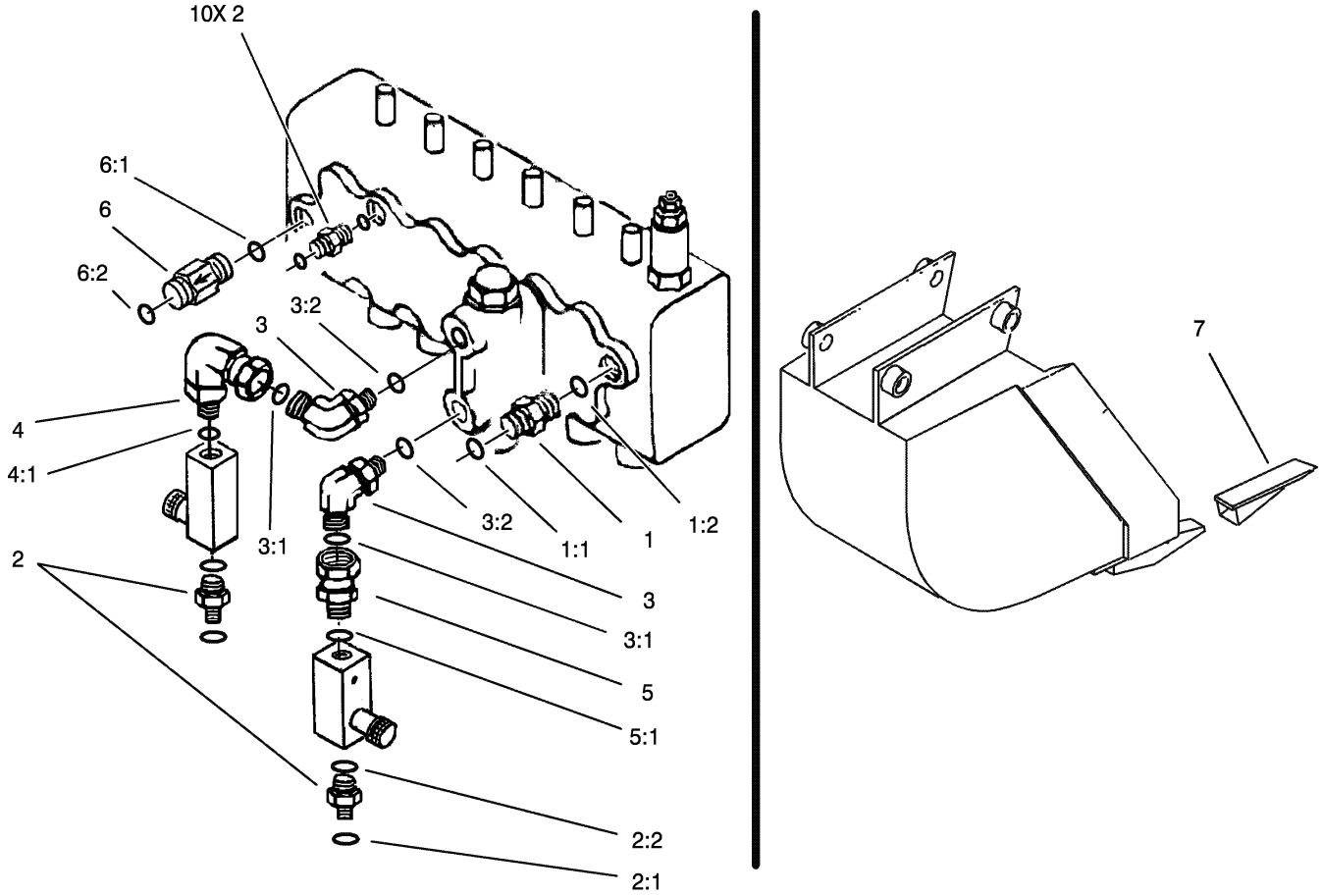

Hydraulic Fitting and Tooth Assembly

Ref	Part No.	Qty.	Description
1	340-4	1	Fitting-Hyd, Straight
1:1	237-30	1	O-Ring
1:2	237-79	1	O-Ring
2	340-1	12	Adapter
2:1	237-21	1	O-Ring
2:2	237-42	1	O-Ring
3	340-77	2	Fitting-Hyd, 90 DEG
3:1	237-22	1	O-Ring
3:2	237-42	1	O-Ring
4	340-110	1	Fitting-Swivel, 90 DEG
4:1	237-42	1	O-Ring
5	100-7214	1	Fitting-Swivel, Straight
5:1	237-42	1	O-Ring
6	104-5946	1	Valve-Check
6:1	237-30	1	O-Ring
6:2	237-79	1	O-Ring
7	100-7233	1	Tooth-Bucket

NOTES

NOTES

TORO®