FORM NO. 3312-887

TORO

MODEL NO. 38110C-7900001 & UP
MODEL NO. 38116C-7900001 & UP
MODEL NO. 38115C-7900001 & UP

PARTS CATALOG

CR-20 SNOWTHROWER

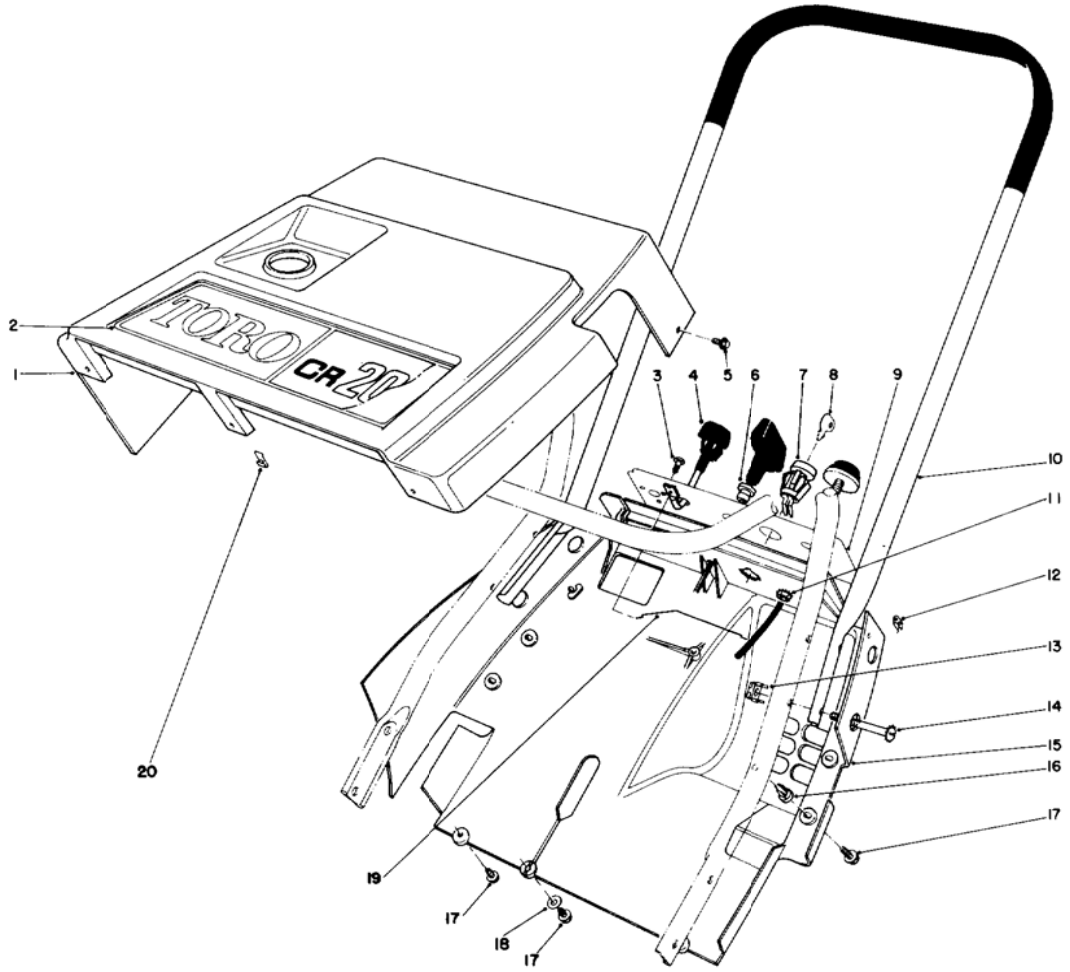

SHROUD & HANDLE ASSEMBLY

Ref. No.	Part No.	Description	No. Used
1	39-0890	Shroud — Upper	1
2	54-9980	Decal — Toro (Model 38110C)	1
*	54-9970	Decal — Toro (Models 38115C & 38116C)	1
3	32144-27	Screw — Thread Forming (Models 38115C & 38116C Only)	3
4	39-0560	Control Assembly — Choke	1
5	32104-76	Screw — Thread Forming Acorn Hd.	2
6	23-7470	Guide — Starter Rope	1
7	40-5940	Switch — On/Off	1
8	33-2010	Key	2
9	54-9950	Decal — Control Panel (Model 38110C)	1

Ref. No.	Part No.	Description	No. Used
*	56-2650	Decal — Control Panel (Model 38116C)	1
*	54-9960	Decal — Control Panel (Model 38115C)	1
10	49-1370	Handle — Upper	1
11	32149-2	Nut — Lock	1
12	49-1490	Nut — Shroud	2
13	3290-225	Nut — Retainer	4
14	32105-11	Screw — Cap Hex Hd.	4
15	49-1610	Shroud — Lower	1
16	3290-453	Nut — Push In	3
17	32144-34	Screw — Thread Forming	6
18	3256-61	Washer	1
19	39-8180	Wire — Control	1
20	52-3300	Nut — U	3

* Not Illustrated

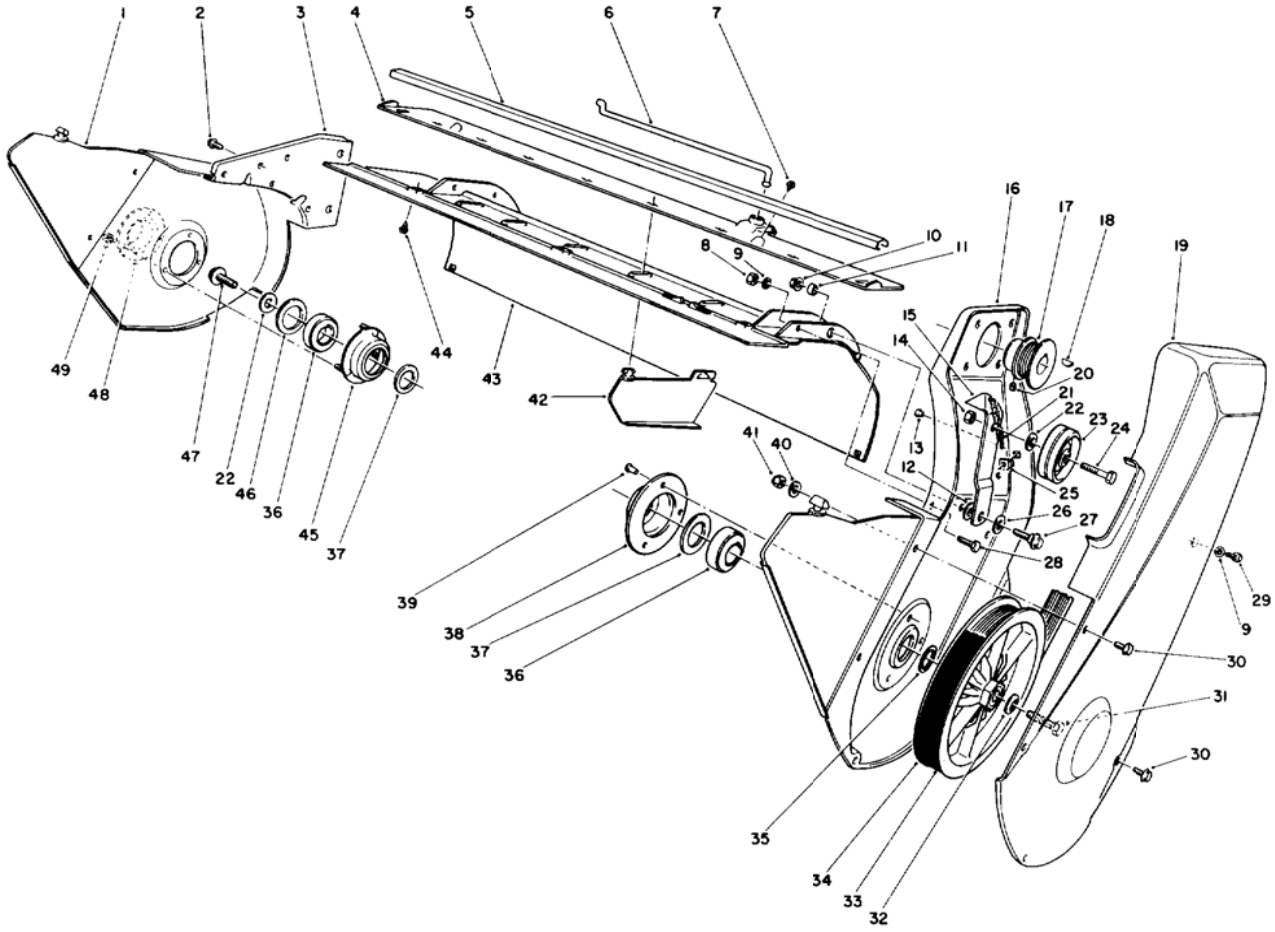

LOWER FRAME ASSEMBLY

Ref. No.	Part No.	Description	No. Used
1	52-7080	Vane — Outer	2
2	32144-4	Screw — Hex Hd.	2
3	52-9100	Side Plate — R.H.	1
4	41-8480	Mount — Vane	1
5	54-9990	Moulding	1
6	52-7090	Linkage — Vane Adjustment	1
7	32104-77	Screw — Self Tapping	2
8	32152-4	Nut — Lock	5
9	3256-22	Washer	6
10	32128-25	Nut — Flange Lock	1
11	51-2950	Spacer	1
12	5-4460	Washer — Pivot	1
13	29-7430	Eyelet	1
14	3296-39	Nut — Lock	1
15	26-8990	Arm — Idler	1
16	33-2130	Side Plate — L.H.	1
17	25-6400	Pulley — Engine	1
18	3257-3	Key — Woodruff	1
19	54-9940	Cover — Drive	1
20	3245-41	Screw — Set	2
21	26-9730	Spring — Extension	1
22	3256-24	Washer — Flat	2
23	25-5880	Pulley — Idler	1
24	323-9	Screw — Cap Hex Hd.	1
25	3290-225	Nut — Retainer	1

Ref. No.	Part No.	Description	No. Used
26	25-5640	Washer	1
27	27-0410	Screw — Shoulder	1
28	321-4	Screw — Cap Hex Hd.	5
29	3235-20	Screw — Cap Hex Hd.	1
30	32105-2	Screw — Mach. Hex Hd.	6
31	321-30	Screw — Cap Hex Hd.	1
32	3290-456	Washer — Belleville	1
33	25-6430	Belt — Drive	1
34	60-9320	Pulley — Rotor	1
35	26-0970	Washer	1
36	38-7820	Bearing — Ball	2
37	52-7280	Washer — Thrust	2
38	38-8620	Flange — Bearing	1
39	3292-8	Rivet	3
40	3256-61	Washer — Flat	4
41	3296-2	Nut — Lock	6
42	52-7060	Vane — Inner	7
43	52-7171	Housing	1
44	32144-34	Screw — Self Tapping	3
45	52-9110	Flange — Bearing	1
46	52-7270	Washer — Rubber	1
47	3234-25	Screw — Cap Hex Flange Hd.	1
48	52-7290	Retainer — Bearing	1
49	32111-14	Nut — Cap	3

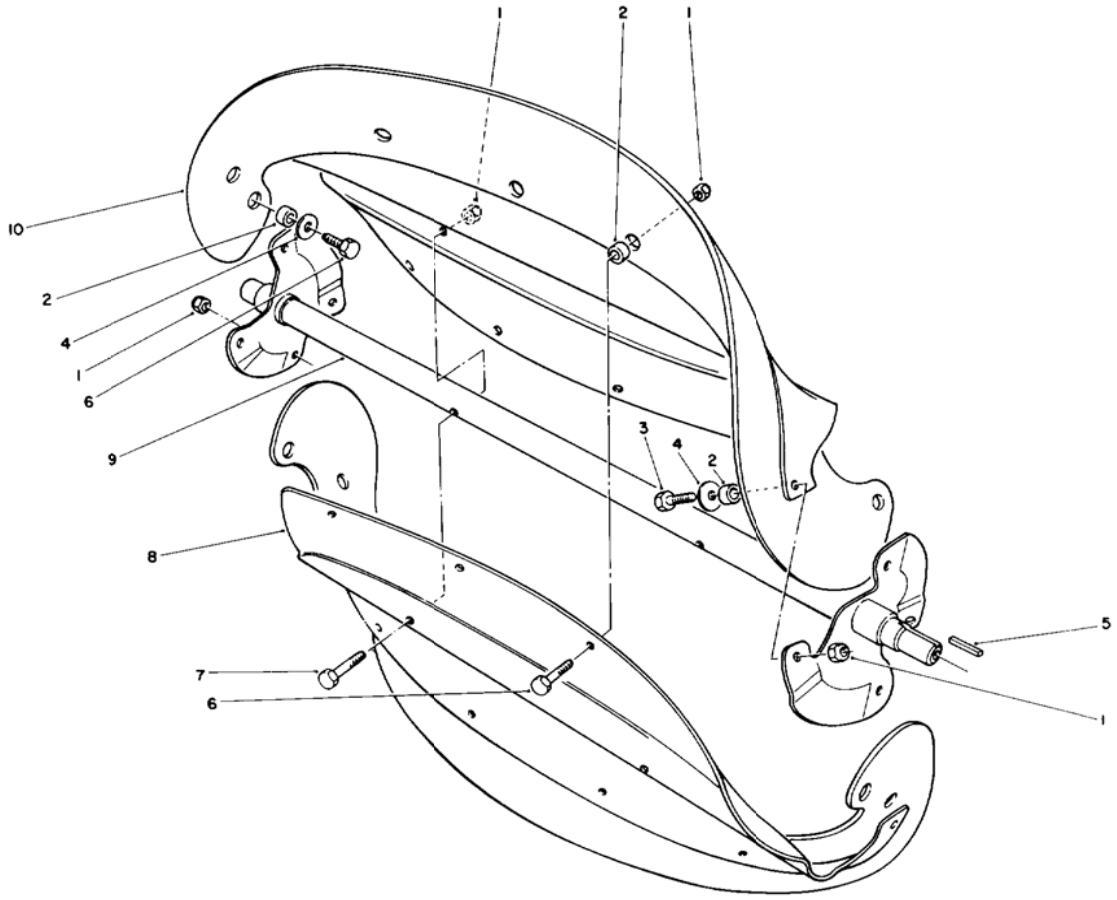

ROTOR ASSEMBLY

Ref. No.	Part No.	Description	No. Used
1	3296-56	Nut — Lock	18
2	55-9370	Spacer	16
3	321-6	Screw — Hex Hd.	4
4	3256-67	Washer	8
5	10-8040	Key — Square	1

Ref. No.	Part No.	Description	No. Used
6	321-4	Screw — Hex Hd.	12
7	321-8	Screw — Hex Hd.	2
8	55-8900	Rotor Half	2
9	55-9200	Rotor Shaft Assembly	1
10	54-9920	Blade — Rotor	2

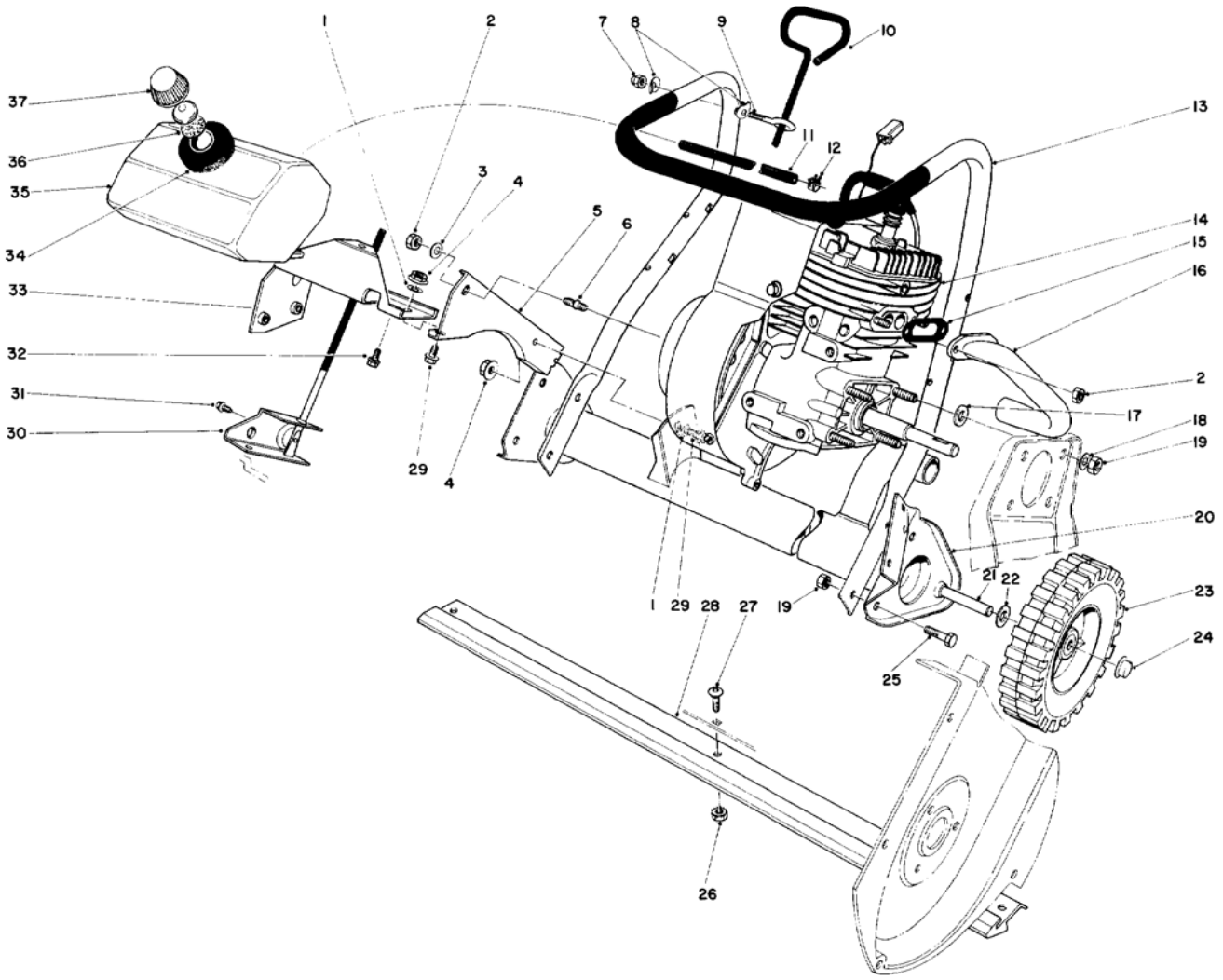

ENGINE ASSEMBLY (MODEL NO. 38110C)

Ref. No.	Part No.	Description	No. Used
1	3290-244	Washer	2
2	32152-4	Locknut	3
3	7-3315	Washer	1
4	32128-30	Flange Nut	2
5	49-1570	Support — Engine	1
6	38-8710	Stud	1
7	32111-7	Cap Nut	1
8	3-7501	Washer	2
9	52-7120	Eye Bolt	1
10	49-1600	Rod — Vane Adjustment	1
11	49-2480	Gas Line	1
12	2412-86	Clamp	2
13	49-1360	Lower Handle	1
14	52-7030	Engine	1
15	23-3810	Gasket — Exhaust Pipe	1
16	52-7200	Exhaust Pipe	1
17	4-2390	Spacer	4
18	3256-23	Washer	4
19	3296-29	Locknut	10

Ref. No.	Part No.	Description	No. Used
20	49-1540	Muffler Assembly	1
21	27-0060	Axle	1
22	3256-24	Washer	2
23	23-3250	Wheel	2
24	3290-320	Retainer — Push On	2
25	322-3	Capscrew	6
26	32149-2	Locknut	3
27	52-7130	Button Hd. Capscrew	3
28	23-3170	Scraper	1
29	3234-23	Screw — Flange	2
30	39-0840	Bracket — Vane Adjustment	1
31	12-5450	Screw — Special	1
32	32144-4	Screw	3
33	49-1550	Support — Gas Tank	1
34	25-1610	Foam Pad	1
35	39-8670	Gas Tank	1
36	20-4620	Gasket	1
37	42-0680	Gas Cap (Incl. Ref. #36)	1
*	12-4309	Loose Parts	1

* Not Illustrated

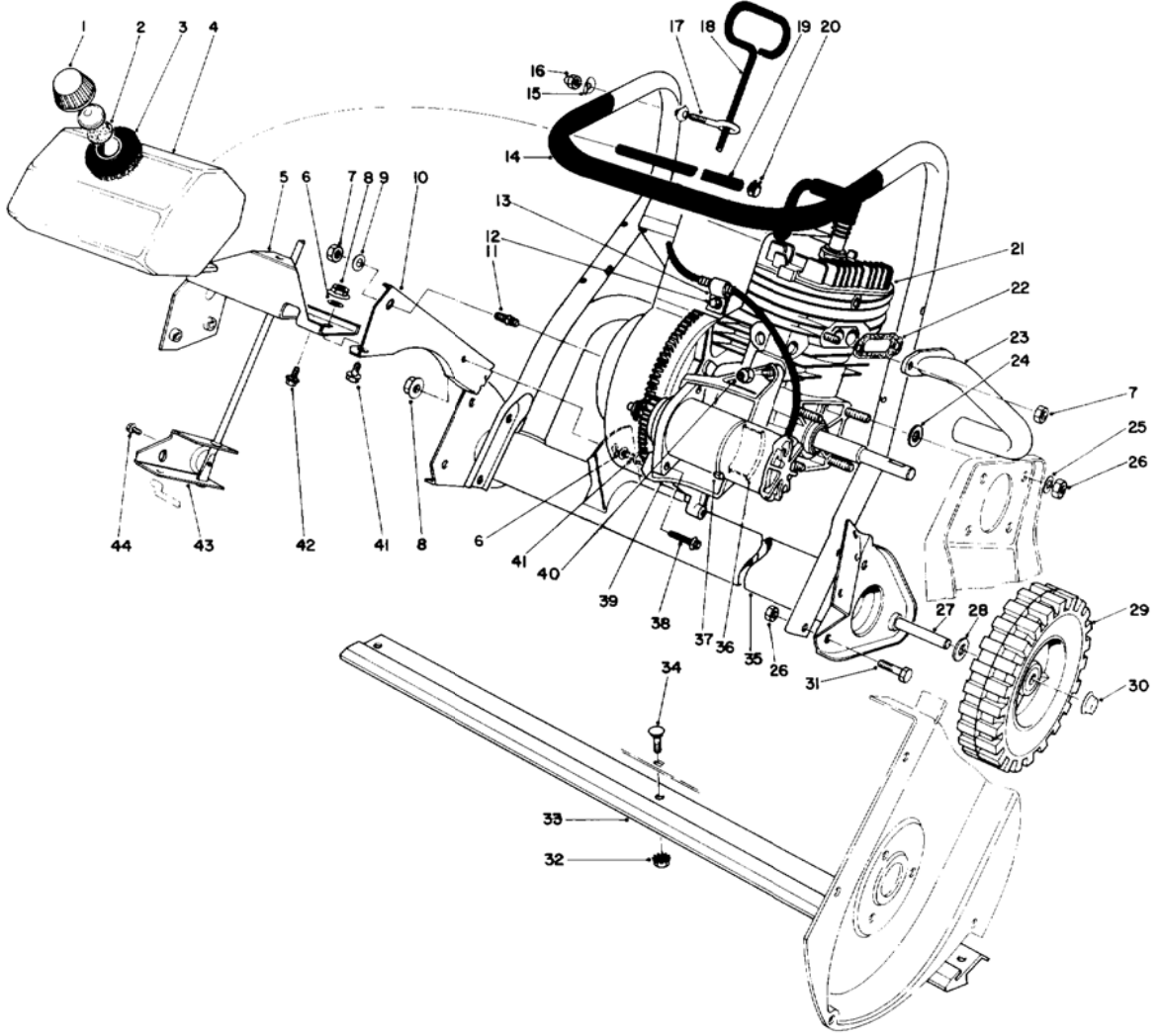

ENGINE ASSEMBLY (MODELS NO. 38115C & 38116C)

Ref. No.	Part No.	Description	No. Used
1	42-0680	Gas Cap Assembly (Incl. Ref. #2)	1
2	20-4620	Gasket — Gas Cap	1
3	25-1610	Foam Pad	1
4	39-8670	Gas Tank	1
5	49-1550	Support — Gas Tank	1
6	3290-244	Washer — External & Internal Tooth	2
7	32152-4	Nut — Lock	3
8	32128-30	Nut — Flange	2
9	7-3315	Spacer	1
10	49-1570	Support — Engine	1
11	38-8710	Stud	1
12	32144-10	Screw — Thread Forming	1
13	2412-65	Cable Clamp	1
14	49-1360	Lower Handle Assembly	1
15	3-7501	Washer — Handle	2
16	32111-7	Nut — Cap	1
17	52-7120	Eyebolt	1
18	49-1600	Rod — Vane Adjustment	1
19	49-2480	Gas Line	1
20	2412-86	Fuel Hose Clamp	2
21	49-1560	Engine	1
22	23-3810	Gasket — Exhaust Pipe	1

Ref. No.	Part No.	Description	No. Used
23	52-7200	Exhaust Pipe	1
24	4-2390	Washer	4
25	3256-23	Washer — Flat	4
26	3296-29	Nut — Lock	10
27	27-0060	Axle	1
28	3256-24	Washer — Flat	2
29	23-3250	Wheel	2
30	3290-320	Retainer — Push On	2
31	322-3	Screw — Cap Hex Hd.	6
32	32149-2	Nut — Lock	3
33	23-3170	Scraper	1
34	52-7130	Screw — Button Hd. Carriage	3
35	49-1540	Exhaust — Muffler Assembly	1
36	28-9120	Motor Support — Rear	1
37	3290-379	Strap — Motor Tie Down	1
38	32144-26	Screw — Thread Forming	2
39	51-2990	Bracket — Motor Mounting	1
40	3296-42	Nut — Lock	3
41	3234-23	Screw — Flange	2
42	32144-4	Screw	3
43	39-0840	Bracket — Vane Adjustment	1
44	12-5450	Screw — Special	1
*	12-4309	Loose Parts	1

* Not Illustrated

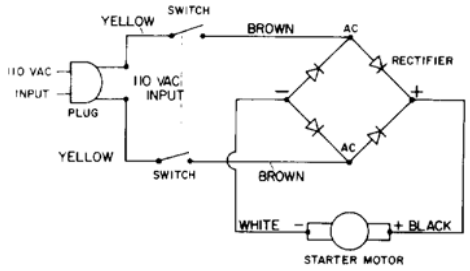

STARTER MOTOR & SWITCH ASSEMBLY (MODELS NO. 38115C & 38116C)

Ref. No.	Part No.	Description	No. Used
1	38-8370	Plug	1
2	32144-27	Plastite Screw	4
3	28-9960	Cap — Switch Housing	1
4	36-8350	Boot — Switch	1
5	36-8340	Switch	1
6	36-8360	Wire — Switch to Rectifier	2
7	37-7600	Bridge Rectifier	1
8	36-8330	Base — Switch Housing	1
9	33-5130	Cable Cover	1
10		Starter Motor	1
11	5-6530	Clip — Retaining	1
12		Helix Pinion Nut	1

Ref. No.	Part No.	Description	No. Used
13	25-3400	Ring — Rubber	1
14		Pinion	1
15	33-5570	Washer	1
16	33-3230	Spring	1
17	33-3210	Pinion Stop	1
18	32151-49	External Retaining Ring	1
*	28-9140	Starter Motor Assembly (Incl. Ref. #10-18)	1
*	36-5350	Pinion Assembly (Incl. Ref. #11-14)	1
*	28-9170	Cord — 7 ft.	1

* Not Illustrated

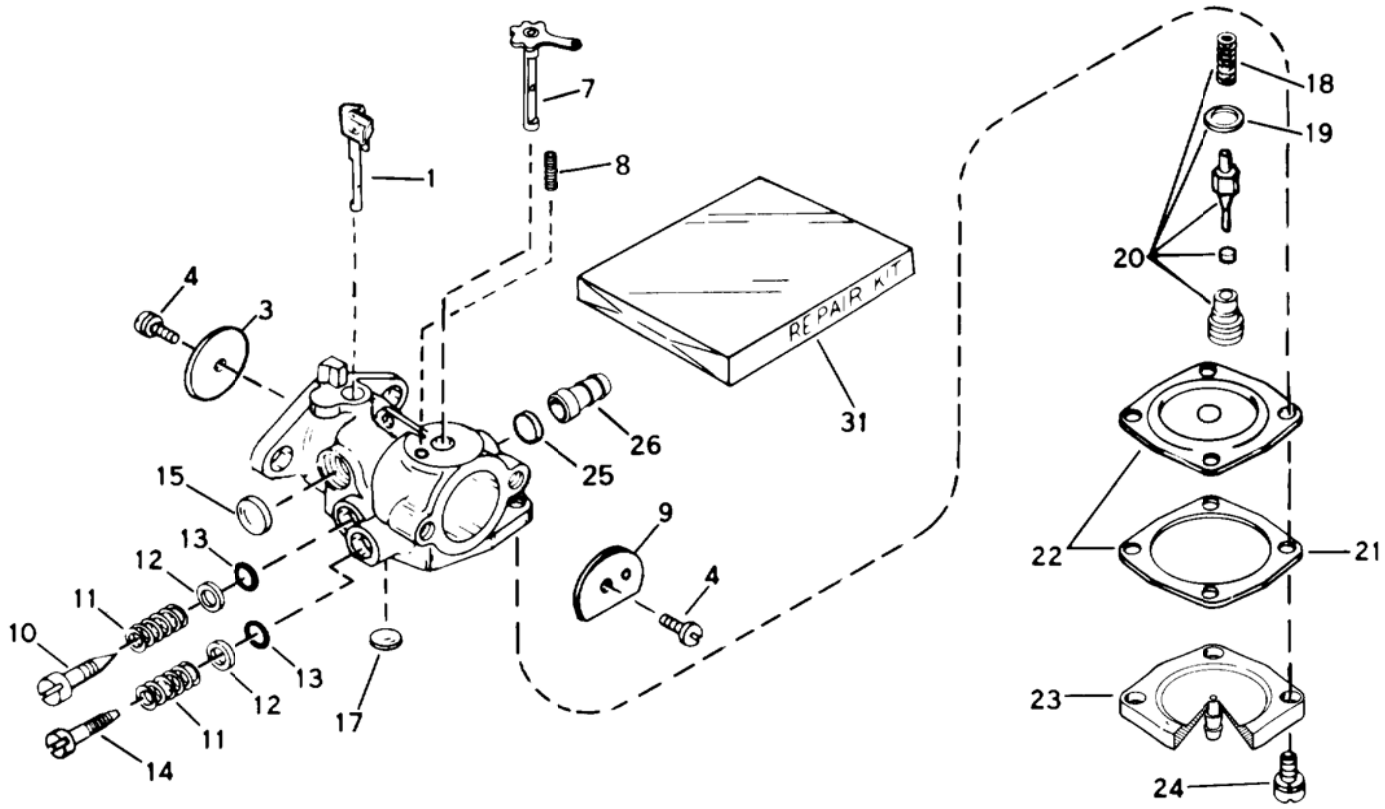

CARBURETOR NO. 632142A

Ref. No.	Part No.	Description	No. Used
1	632130	Shaft & Lever Assy. — Throttle	1
3	631036	Shutter — Throttle	1
4	650506	Screw — Throttle & Choke Shutter	1
7	631888	Shaft & Lever Assy. — Choke	1
8	630735	Spring — Choke Positioning	1
9	31837	Shutter — Choke	1
10	631562	Screw — Idle Adjustment	1
11	630738	Spring — Adjustment Screw	1
12	630739	Washer — Adjustment Screw	1
13	*630740	"O" Ring — Adjustment Screw	1
14	630898	Screw — Main Adjustment	1
15	*630748	Plug — Welch	1

Ref. No.	Part No.	Description	No. Used
17	*630746	Plug — Welch	1
18	631049	Spring — Valve	1
19	630742	Gasket — Valve Seat	1
20	*630932A	Inlet Needle, Seat, Spring & Gasket Assy. (Incl. #18 & 19)	1
21	630750	Gasket — Diaphragm	1
22	*630978	Diaphragm Assy. (Incl. #21)	1
23	632127	Cover — Diaphragm	1
24	650817	Screw — Diaphragm Cover	1
25	632163	Disk	1
26	632164	Fitting — Fuel Inlet	1
31	631893	Repair Kit	1

* Indicates Parts Included in Repair Kit Ref. #31.

ENGINE TECUMSEH MODEL NO. AH-600 TYPE 1622-M
(MODEL NO. 38110C)

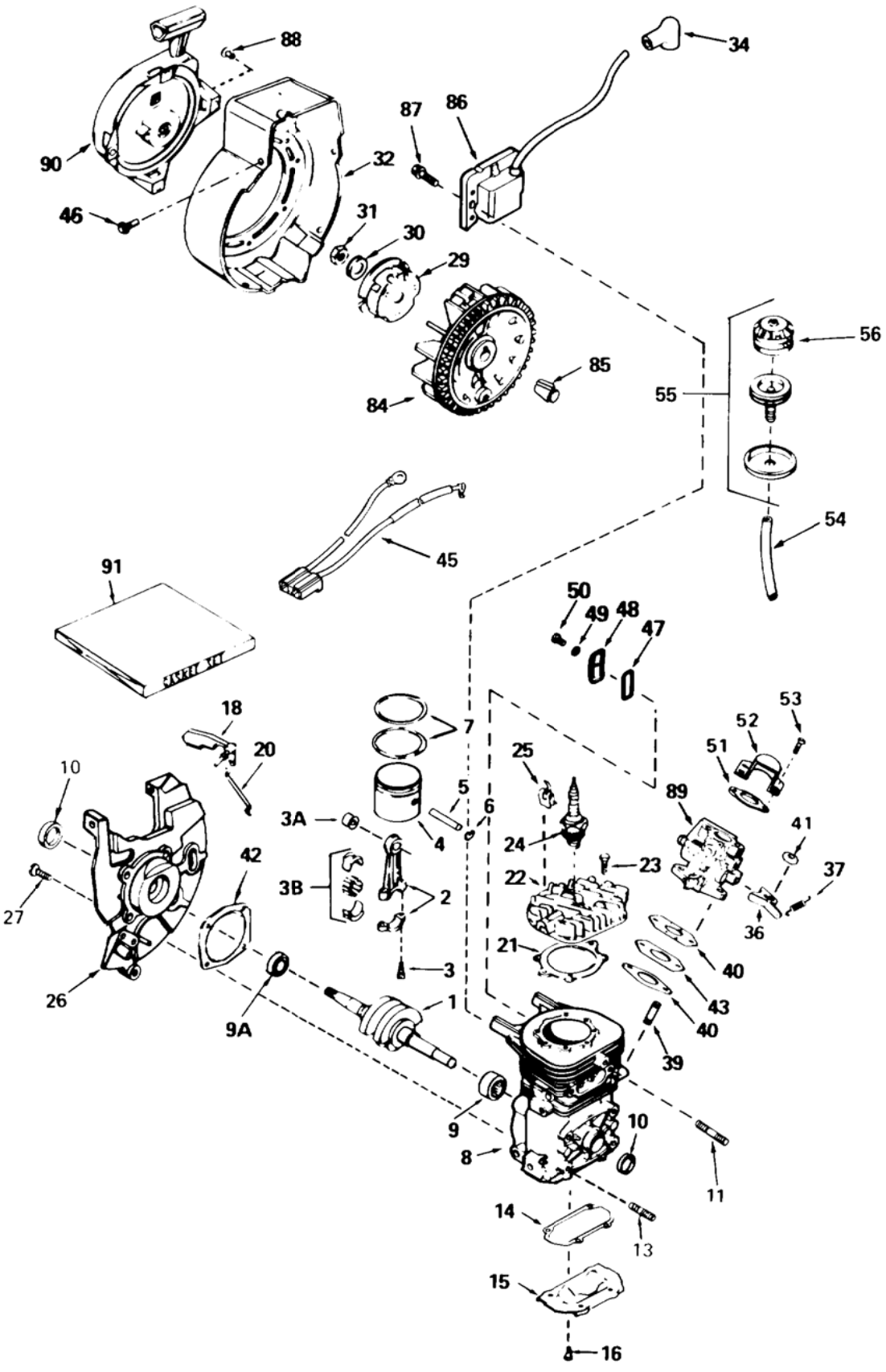

ENGINE TECUMSEH MODEL NO. AH-600 TYPE 1622-M
(MODEL NO. 38110C)

Ref. No.	Part No.	Description	No. Used
1	290571	Crankshaft	1
2	310235B	Rod Assy. — Connecting (Incl. Ref. #3, 3A & 3B)	1
3	650633	Screw — Connecting Rod	1
3A	530104A	Bearing — Cartridge	1
3B	530150	Bearing & Liner Set — Needle	1
4	310269	Piston	1
5	310264	Pin — Piston	1
6	310167	Ring — Piston Pin Retaining	1
7	310190	Ring Set — Piston	1
8		Block Assy. — Cylinder (Order short block if replacement is required.)	1
9	530105	Bearing — Needle	1
9A	530110	Bearing — Ball	1
10	510319	Seal — Crankshaft	1
11	650801	Stud — Exhaust	1
13	650796	Stud — Mounting	1
14	*510323	Gasket — Cover	1
15	570644	Plate — Cover	1
16	650579	Screw — Pan Flex Hd.	1
18	490291A	Vane Assy. — Air	1
20	490294	Link — Governor	1
21	*510274	Gasket — Cylinder Head	1
22	250240A	Head — Cylinder	1
23	650477	Screw — Pan Flex Hd.	1
24	611049	Plug — Spark (RCJ-8Y or equivalent)	1
25	611034	Clip	1
26	350396	Base Assy. — Blower Housing (Incl. Ref. #10)	1
27	650561	Screw — Hex Hd.	1
29	590551	Cup — Starter	1
30	650815	Washer — Spring	1
31	650390	Nut — Flywheel	1
32	350397	Housing — Blower	1
34	610118	Cover — Spark Plug	1
36	570645	Lever — Adjusting	1
37	570646	Spring — Adjusting Lever	1
39	650527	Stud — Carburetor	1
40	*510326	Gasket — Carburetor	1
41	650457	Nut — Hex	1
42	*510292	Gasket — Housing Base	1
43	570438A	Spacer	1
45	611065	Harness — Wiring	1
46	650356	Screw — Hex Washer Hd. Powerlok Thread	1
47	*510325	Gasket — Cover	1
48	570647	Cover Assy. — Compression Release	1
49	650838	Washer — Flat	1
50	650579	Screw — Pan Flex Hd.	1
51	510206	Gasket	1
52	570434	Baffle — Air	1
53	650229	Screw — Rd. Hd.	1
54	32180C	Line — Primer	1
55	570629A	Primer Assy.	1
56	570442A	Bulb — Primer	1
84	611046A	Flywheel	1
85	611032	Sleeve — Flywheel	1
86	34443A	Lamination & Coil Assy. — Solid State	1
87	650814	Screw — Hex Hd.	1
88		Rivet — Pop (3/16" Dia.) (Can be purchased locally)	1
89	632142A	Carburetor (Incl. Ref. #40)	1
90	590537	Starter Assy. — Rewind	1
91	510324A	Gasket Set	1

* Indicates Parts Included in Gasket Set, Ref. #91.

ENGINE TECUMSEH MODEL NO. AH-600 TYPE 1623-M
(MODELS NO. 38115C & 38116C)

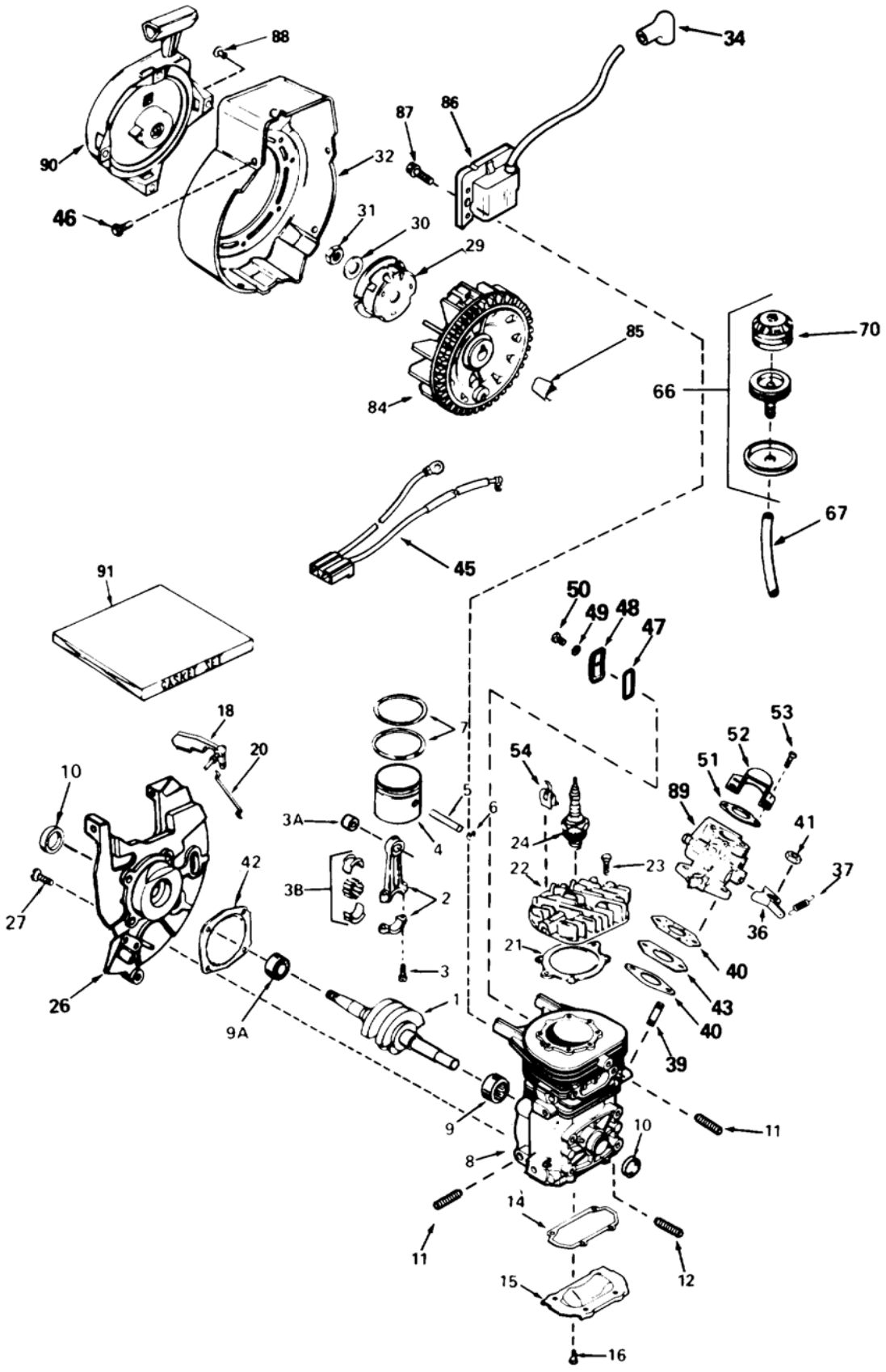

ENGINE TECUMSEH MODEL NO. AH-600 TYPE 1623-M
(MODELS NO. 38115C & 38116C)

Ref. No.	Part No.	Description	No. Used
1	290571	Crankshaft	1
2	310235B	Rod Assy. — Connecting (Incl. Ref. #3, 3A & 3B)	1
3	650633	Screw — Connecting Rod	1
3A	530104A	Bearing — Cartridge	1
3B	530150	Bearing & Liner Set — Needle	1
4	310269	Piston	1
5	310264	Pin — Piston	1
6	310167	Ring — Piston Pin Retaining	1
7	310190	Ring Set — Piston	1
8		Block Assy. — Cylinder (Order short block if replacement is required.)	1
9	530105	Bearing — Needle	1
9A	530110	Bearing — Ball	1
10	510319	Seal — Crankshaft	1
11	650801	Stud — 1/4-20 x 1-1/4	1
	650883	Stud — 1/4-20 x 1-1/8	1
12	650796	Stud — 5/16-18 x 1-1/4	1
14	*510323	Gasket — Cover	1
15	570644	Plate — Cover	1
16	650579	Screw — Pan Flex Hd.	1
18	490291A	Vane Assy. — Air	1
20	490294	Link — Governor	1
21	*510274	Gasket — Cylinder Head	1
22	250240A	Head — Cylinder	1
23	650477	Screw — Pan Flex Hd.	1
24	611049	Plug — Spark (RCJ-8Y or equivalent)	1
26	350421	Base Assy. — Blower Housing (Incl. Ref. #10)	1
27	650561	Screw — Hex Hd.	1
29	590551	Cup — Starter	1
30	650815	Washer — Spring	1
31	650390	Nut — Flywheel	1

Ref. No.	Part No.	Description	No. Used
32	350399	Housing — Blower	1
34	610118	Cover — Spark Plug	1
36	570645	Lever — Adjusting	1
37	570646	Spring — Adjusting Lever	1
39	650527	Stud — Carburetor	1
40	*510326	Gasket — Carburetor	1
41	650457	Nut — Hex	1
42	*510292	Gasket — Housing Base	1
43	570438A	Spacer	1
45	611065	Harness — Wire	1
46	650356	Screw — Hex Washer Hd. Powerlok Thread	1
47	*510325	Gasket — Cover	1
48	570647	Cover Assy. — Compression Release	1
49	650838	Washer — Flat	1
50	650579	Screw — Pan Flex Hd.	1
51	510206	Gasket	1
52	570434	Baffle	1
53	650229	Screw — Round Hd.	1
54	611034	Clip	1
66	570629A	Primer Assy. (Incl. Ref. #70)	1
67	32180C	Line — Primer	1
70	570442A	Bulb — Primer	1
84	611050	Flywheel	1
85	611032	Sleeve — Flywheel	1
86	34443A	Lamination & Coil Assy. — Solid State	1
87	650814	Screw — Hex Hd.	1
88		Rivet — Pop (3/16" dia.) (Can be purchased locally)	1
89	632142A	Carburetor (Incl. Ref. #40)	1
90	590537	Starter Assy. — Rewind	1
91	510324A	Gasket Set	1

* Indicates Parts Included in Gasket Set, Ref. #91.

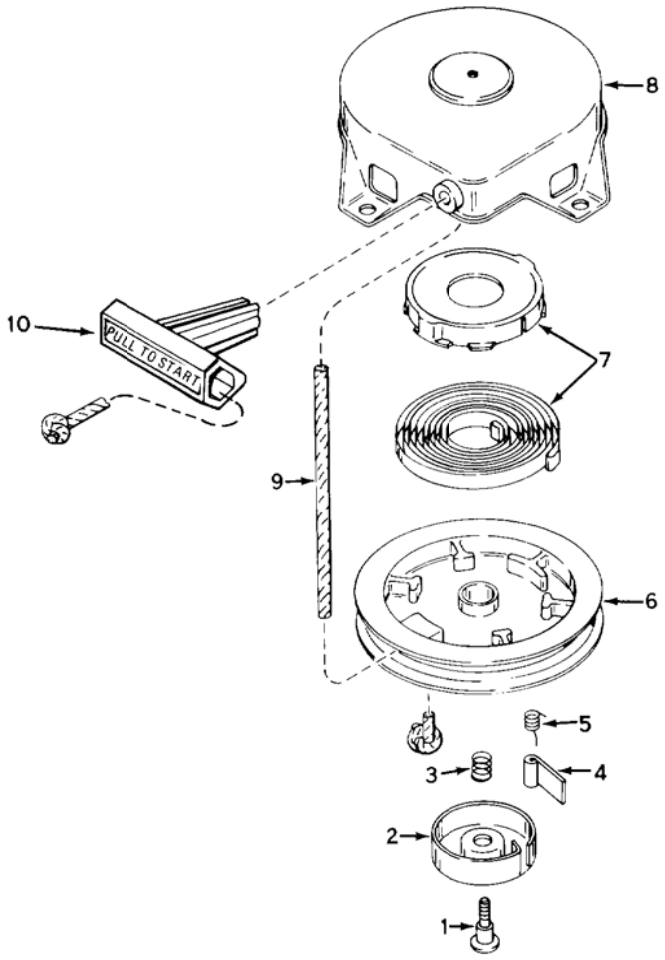

REWIND STARTER NO. 590537

Ref. No.	Part No.	Description	No. Used
1	590409A	Screw — Retainer	1
2	590410	Retainer — R.H.	1
3	590411	Spring — Brake	1
4	590148	Dog — Starter	1
5	590412	Spring — R.H. Dog	1

Ref. No.	Part No.	Description	No. Used
6	590413A	Pulley	1
7	590414	Spring & Keeper Assy.	1
8	590536	Housing Assy. — Starter	1
9	590535	Rope — Starter	1
10	590452	Handle Assy. — Starter	1