Form Number 3352-457

CCR™ Powerlite® Snowthrower

Model No. 38172 - 250010001 and up.

Parts Catalog

Ordering Replacement Parts

To order replacement parts, please supply the part number, the quantity, and the description of each part desired.

Understanding Reference Numbers

Each Identified part in an illustration has a reference number. The reference number for a part also appears in the parts list, along with other information about the part.

This catalog uses two special reference number formats, one to indicate parts in a service assembly and another to indicate the quantity of a given part in an illustration.

Service Assembly Reference Numbers

Parts in service assemblies have reference numbers in the form a:b. The a represents the reference number of the entire service assembly and the b represents a sequential number unique to each part within the service assembly.

For example, a wheel assembly might be identified by reference number 6, the tire by 6:1, the valve by 6:2, and the wheel by 6:3. When you order the assembly identified by reference number 6, you receive all parts identified by reference numbers 6:1, 6:2, and 6:3. However, you may also order any part individually. Reference numbers of this type appear in illustrations and in part lists.

Reference Numbers Indicating Quantity

In an illustration, if a reference number indicates more than one part, the reference number has the form nX y. The n represents the quantity of the part, the X is the multiplication symbol, and the y represents the reference number.

For example, in an illustration, the reference number 2X 37 means that two of the parts identified by reference number 37 are indicated.

©The Toro Company - 2004
All Rights Reserved

Register your product at www.Toro.com

Contents

Description	Page
Impeller Drive Assembly	3
Housing, Upper Shroud, and Chute Assembly	4
Impeller Assembly	5
Engine, Side Plate and Wheel Assmbly	6
Handle and Lower Shroud Assembly	7
Engine Assembly Tecumseh No. Hsk635 1723c	8
Carburetor Assembly No. 640086 Tecumseh Hsk635 Type 1723c	10
Recoil Starter Assembly No. 590743 Tecumseh Hsk635 Type 1723c	11
Recoil Starter Assembly No. 590712 (Optional) Tecumseh Hsk635 Type 1723c	12

Part Description Abbreviations

Part descriptions in this catalog may include the following abbreviations.

AR	as required
ASM	assembly
CARR	carriage
DEG	degrees
FH	flat head
GA	gauge
HF	hex flange
HH	hex head
HHF	hex head flange
HHFTF	hex head flange thread forming
HJ	hex jam
HLH	hex lag head
HOC	height-of-cut
HS	hex
HSBH	hex socket button head
HSFH	hex socket flat head
HSH	hex socket head
HWH	hex washer head
HWHTF	hex washer head thread forming
HYD	hydraulic
INC	incorporated
LH	left hand
NI	nylon insert
PPH	phillips pan head
PTH	phillips truss head
PTO	power take off
RH	right hand
SFH	slotted fillister head
SHH	slotted hex head
SHWH	slotted hex washer head
SPH	slotted pan head
SQH	square head
SRH	slotted round head
STD	standard
TAP	self tapping
TTH	torx truss head
WH	wing head

Footnotes

❶ Not illustrated

❷ Not serviced separately

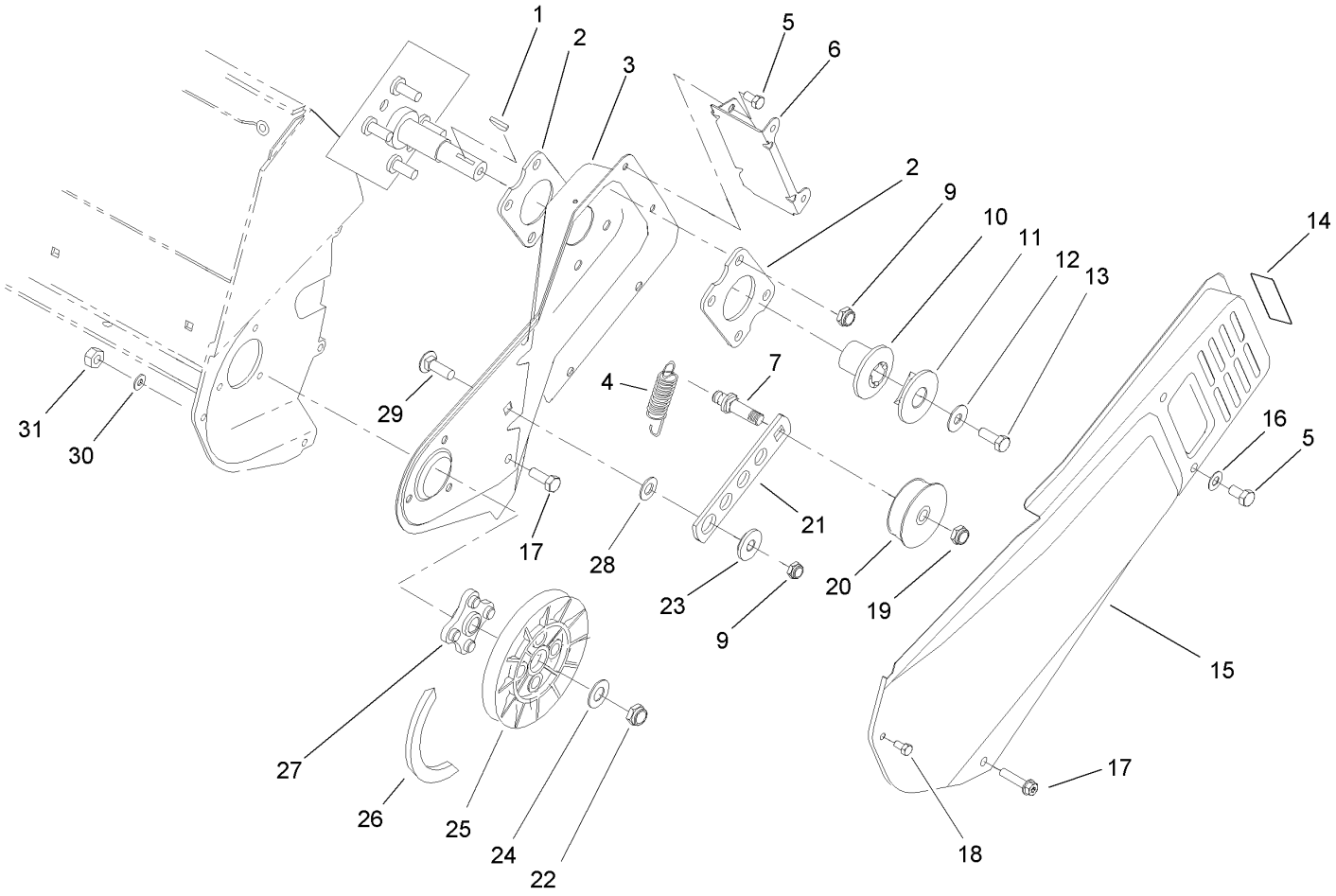

Impeller Drive Assembly

Ref	Part No.	Qty.	Description
1	3257-3	1	Key-Woodruff
2	71-5290-03	2	Plate-Engine
3	95-7945-03	1	Sideplate-LH
4	75-9020	1	Spring-Extension
5	32144-4	4	Screw-HWH
6	75-8870-03	1	Bracket-Cover, Belt
7	75-8720	1	Pin-Idler
9	3296-29	5	Nut-Lock, NI
10	71-5050	1	Hub-Half Sheave
11	71-5060	1	Cap-Half Sheave
12	3256-71	1	Washer-Flat
13	3235-6	1	Screw-HH
14	104-2767	1	Decal-Warning, Hot Surface
15	75-8830-03	1	Cover-Belt
16	3256-1	2	Washer-Flat
17	46-8094	3	Screw-Plastite
18	32105-23	1	Screw
19	3296-59	1	Nut-Lock, NI
20	71-5260	1	Pulley-Idler
21	75-9050	1	Arm-Idler
22	3296-38	1	Nut-Lock NI
23	75-8700	1	Bushing-Idler
24	3256-25	1	Washer-Flat
25	75-8750	1	Pulley-Driven

Ref	Part No.	Qty.	Description
26	75-9010	1	V-Belt
27	75-8740	1	Hub
28	25-5640	1	Washer
29	3230-23	1	Screw-CARR
30	3256-14	1	Washer-Flat
31	3296-2	1	Nut-Lock

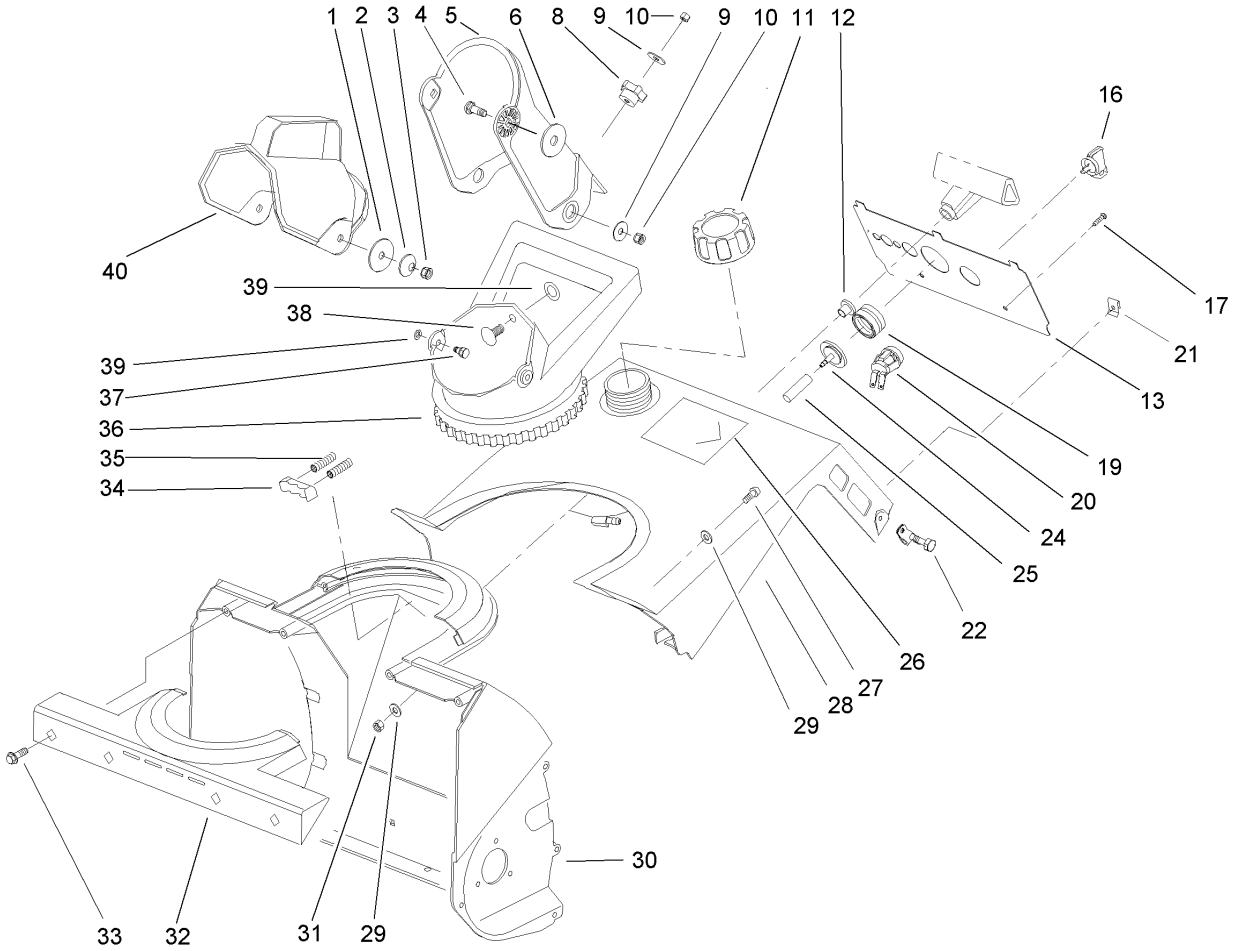

Housing, Upper Shroud, and Chute Assembly

Ref	Part No.	Qty.	Description
1	3256-68	2	Washer-Flat
2	3290-340	2	Washer-Belleville
3	3296-29	2	Nut-Lock, NI
4	3230-2	2	Bolt-CARR
5	104-2764	1	Chute
6	95-1905	2	Washer-Rubber
8	233-67	1	Knob-Chute
9	3256-81	2	Washer-Flat
10	3296-56	2	Nut-Lock, NI
11	104-4133	1	Gas Cap ASM
12	23-7470	1	Guide-Starter Rope
13	104-4938	1	Control Panel-Silkscreened
16	63-8360	1	Key-Ignition
17	32144-53	2	Screw-SHWH
19	66-7460	1	Bulb-Primer
20	40-5940	1	Switch-On/off
21	49-1490	2	Nut
22	32144-89	2	Screw-Forming, Thread
24	44-2750	1	Body-Primer
25	44-3173	1	Hose-Primer
26	108-5081	1	Decal-Shroud, Ccr Powerlite Recoil
27	3250-32	2	Screw-PPH
28	105-2994	1	Shroud-Tank, Gas Upper
29	3256-1	4	Washer-Flat

Ref	Part No.	Qty.	Description
30	75-8660	1	Housing
31	3296-42	2	Nut-Lock, NI
32	75-8650	1	Retainer-Chute
33	46-8094	4	Screw-Plastite
34	75-9160	1	Detent-Chute
35	75-9170	2	Spring-Compression
36	75-8670	1	Handle-Chute
37	321-3	2	Screw-HH
38	3229-11	1	Screw-CARR
39	32115-15	3	Pushnut-Retainer, Bolt
40	75-8770	1	Deflector-Chute

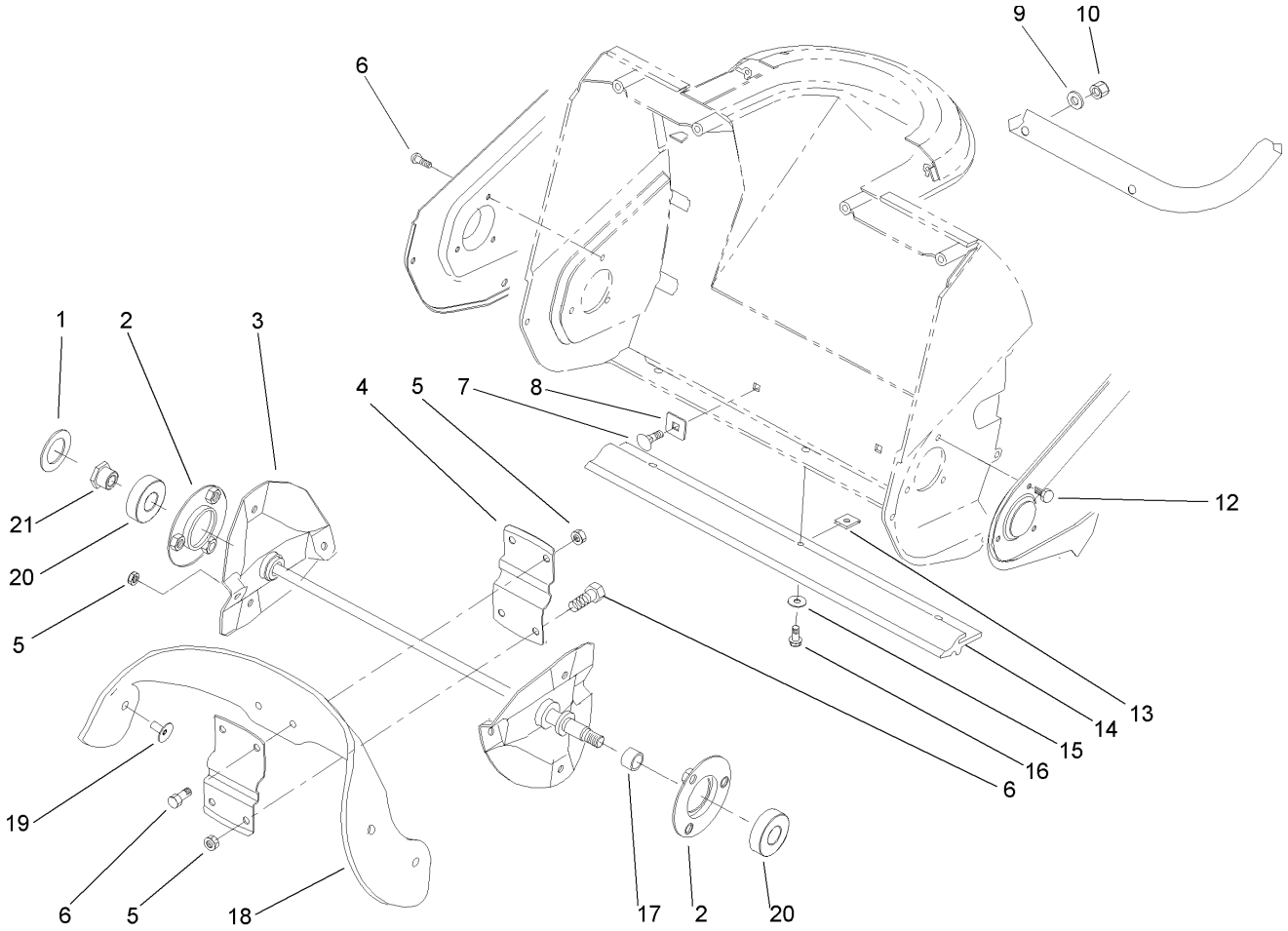

Impeller Assembly

Ref	Part No.	Qty.	Description
1	75-9180	1	Washer-Rubber
2	75-9080-03	2	Flange Bearing ASM
3	75-8840-03	1	Rotor Shaft ASM
4	75-8880-03	2	Support-Rotor
5	3296-56	12	Nut-Lock, NI
6	3234-33	7	Screw-HHF
7	3229-5	2	Screw-CARR
8	75-9040	2	Washer-Square
9	3-7501	2	Washer
10	3296-42	2	Nut-Lock, NI
12	321-3	3	Screw-HH
13	32115-19	3	Nut-Speed, U Type
14	75-8780	1	Scraper
15	3256-14	3	Washer-Flat
16	32144-34	3	Screw-Forming, Thread
17	75-8710	1	Spacer
18	84-1980	2	Blade-Rotor
19	84-1970	8	Screw
20	100-1048	2	Bearing-Ball
21	75-8690	1	Nut

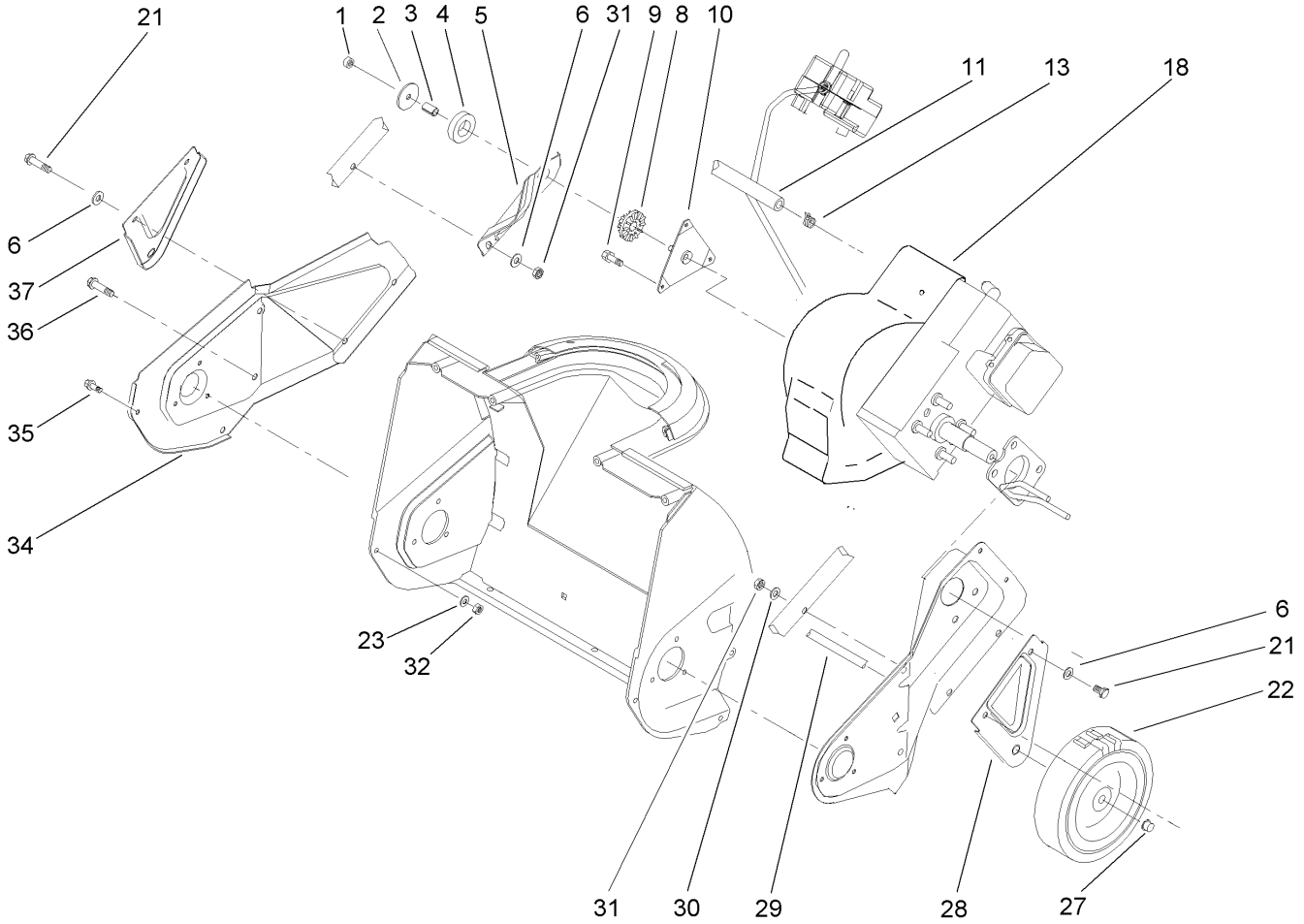

Engine, Side Plate and Wheel Assmbly

Ref	Part No.	Qty.	Description
1	3296-56	1	Nut-Lock, NI
2	3256-58	1	Washer-Flat
3	80-0650	1	Spacer-Tubular
4	95-1903	1	Ring-Isolator
5	75-8980-03	1	Bracket-Support, Engine
6	3256-1	6	Washer-Flat
8	75-9100	1	Bushing-Isolator
9	94-2789	3	Screw
10	92-6012	1	Bracket/stud ASM
11	49-2483	1	Line-Gas
13	2412-98	2	Clamp
❷18		1	Engine-Tecumseh, Hsk635-1723c
21	321-10	4	Screw-HH
22	23-3250	2	Wheel
23	3256-14	1	Washer-Flat
27	3290-320	2	Retainer-Push On
28	75-8910-03	1	Bracket-Wheel, LH
29	27-0062	1	Axle
30	3-7501	2	Washer
31	3296-42	4	Nut-Lock, NI
32	3296-2	1	Nut-Lock
34	75-8820-03	1	Plate-RH Side
35	32105-23	1	Screw
36	46-8094	3	Screw-Plastite

Ref	Part No.	Qty.	Description
37	75-8900-03	1	Bracket-Wheel, RH

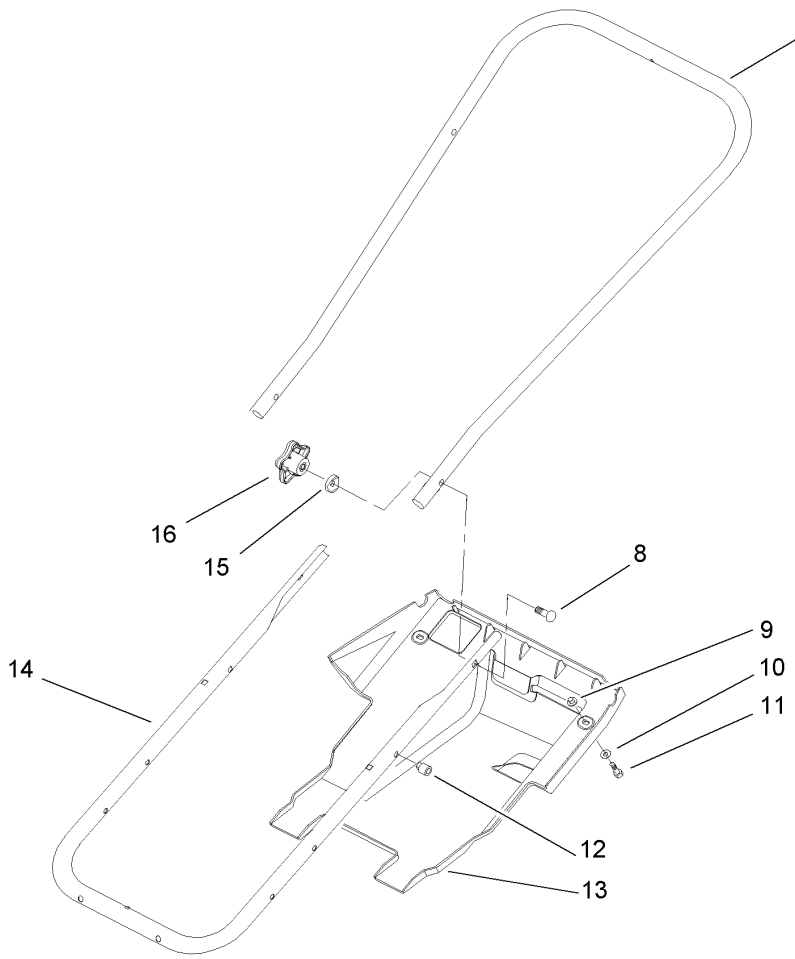

Handle and Lower Shroud Assembly

Ref	Part No.	Qty.	Description
3	75-9070-03	1	Handle-Upper
8	92-2260	2	Screw-Handle
9	605120	2	Nut-Clip
10	3256-14	2	Washer-Flat
11	32144-34	2	Screw-Forming, Thread
12	32115-17	2	Nut-Expansion
13	75-8790	1	Shroud
14	75-9060-03	1	Tube-Frame
15	107-3844	2	Washer
16	106-4161	2	Knob-Handle

Engine Assembly
Tecumseh No. Hsk635 1723c

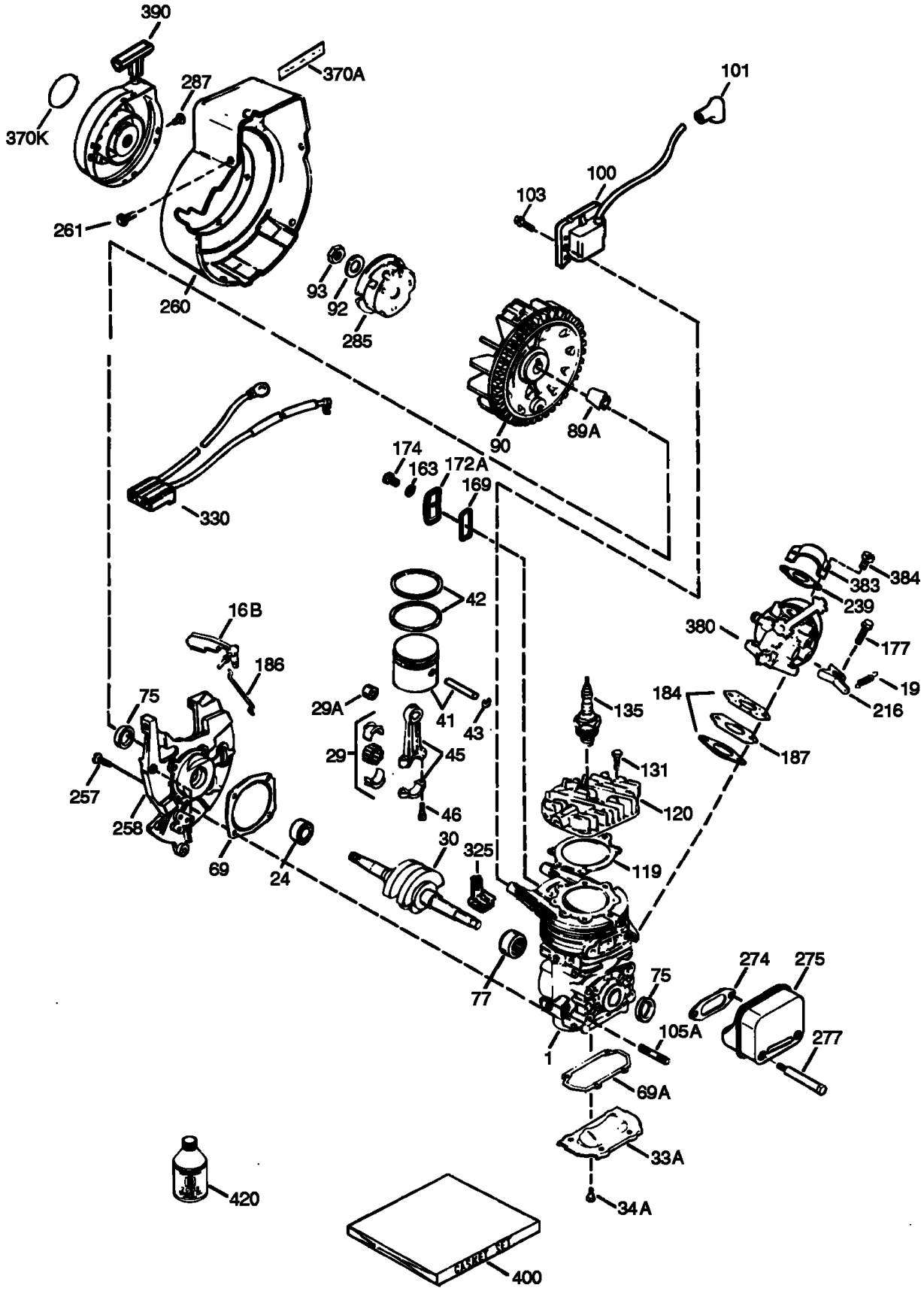

Engine Assembly
Tecumseh No. Hsk635 1723c

Ref	Part No.	Qty.	Description
1	0	1	Cylinder
16B	490291A	1	Vane-Air
19	570707	1	Spring-Extention
24	530110	1	Bearing-Ball
29	530150	1	Needle Bearing And Liner Set (37 Needles)
29A	530104A	1	Bearing-Cartridge
30	290602	1	Crankshaft
33A	570644	1	Plate-Cover
34A	650579	4	Screw, T-25, 10-24 X 1/2”
41	310283A	1	Piston & Pin ASM Piston & Pin Ass’y. (Incl. Ref. #43)
42	310289	2	Ring Set
43	310167	2	Ring-Retaning
45	310235B	1	Connecting Rod Ass’y. Piston & Pin ASM (Incl. Ref. #29, 29a, & 46)
46	650633	2	Bolt-Rod, Connecting
69	510292A	1	Gasket-Cover, Cylinder
69A	510323A	1	Gasket-Plate, Cover
75	510319	2	Seal-Oil
77	530105	1	Bearing-Cartridge
89A	611032	1	Sleve-Adapter
90	611066	1	Flywheel
92	650815	1	Washer-Belleville
93	650390	1	Nut-Flywheel
100	34443B	1	Solid State Ignition (Incl. Ref. #101)
101	610118	1	Cover-Spark Plug
103	651007	2	Screw, Torx T-15, 10-24 X 1in
105A	650796	4	Stud
119	510274A	1	Gasket-Cylinder Head
120	250240B	1	Head-Cylinder
131	650477	5	Screw, T-30, 1/4-20 X 3/4”
135	611049	1	Plug-Spark, Resister (Rcj8y)
163	650838	1	Washer
169	510325A	1	Cover, Compression Release
172A	570708	1	Cover-Compression Release
174	650579	1	Screw, T-25, 10-24 X 1/2”
177	650959	2	Screw, 5/32, 1/4-20 X 1”
184	510326A	2	Gasket-Carburetor
186	490322	1	Governor-Link
187	570438A	1	Spacer
216	570645	1	Lever-Adjusting, Rpm
239	35815	1	Gasket-Air Cleaner
257	650911	4	Screw, T-30, 1/4-20 X 5/8”
258	350422	1	Blower Housing Base (Incl. Ref. #75)
260	350437	1	Housing-Blower
261	650737	4	Screw, 1/4-20 X 1/2”
274	510207A	1	Gasket-Exhaust
275	390332	1	Muffler (Incl. Ref. #274 And 277)
277	650869	2	Screw, 1/4-20 X 2-3/4”
285	590551A	1	Cup-Starter
287	650926	3	Screw, 8-32 X 21/64in

Ref	Part No.	Qty.	Description
325	29443	1	Clip-Wire
330	611131A	1	Harness-Wire
370A	36261	1	Decal-Lubrication
370K	36695	1	Decal-Starter
380	640086A	1	Carburetor
383	570434	1	Baffle-Carburetor
384	650431	2	Screw, T-25, 10-32 X 5/8”
390	590743	1	Rewind Starter Assembly
400	510324B	1	Gasket Set
420	730227B	1	2-Cycle Oil (8 Oz.)

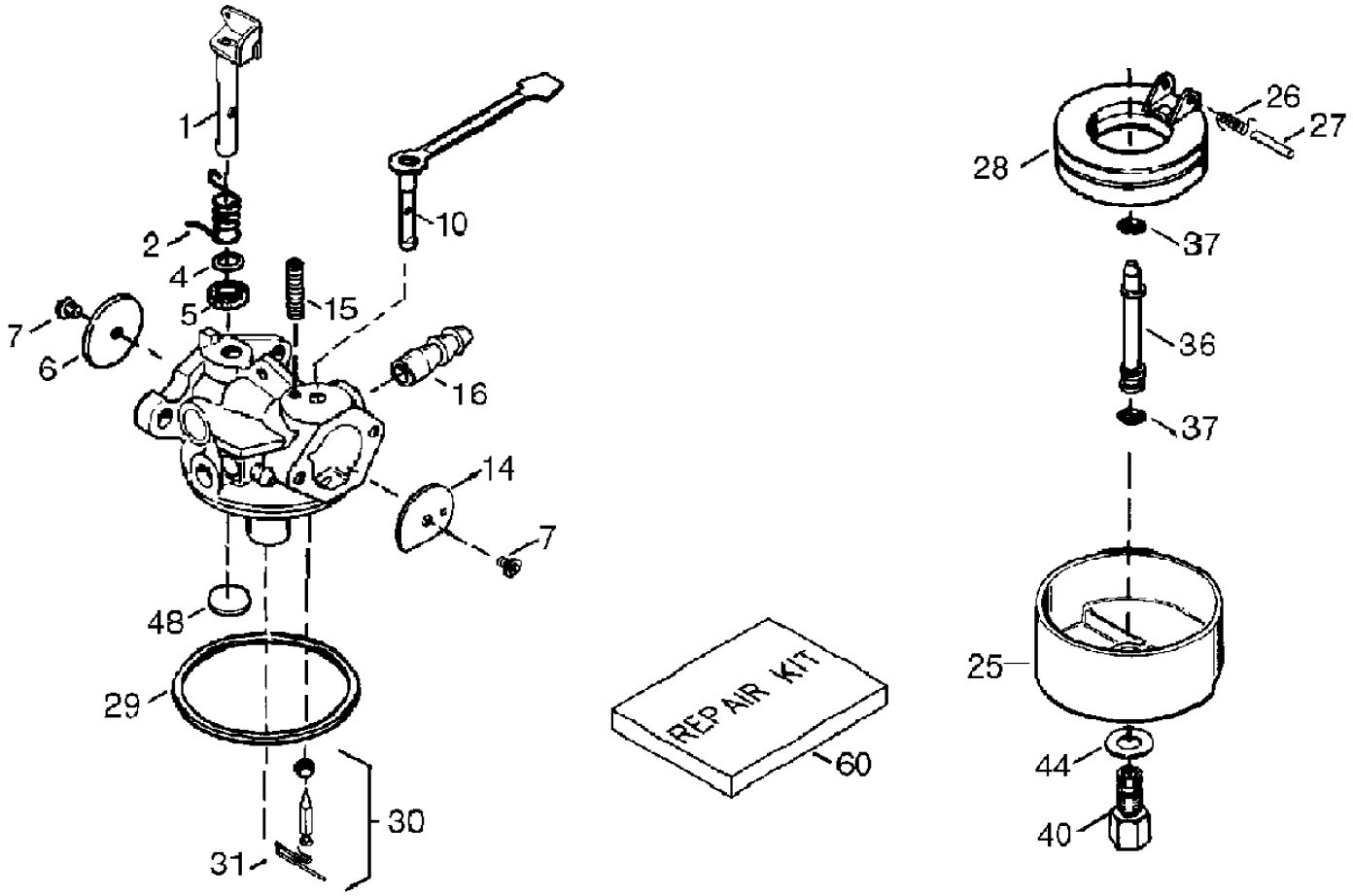

Carburetor Assembly No. 640086
Tecumseh Hsk635 Type 1723c

Ref	Part No.	Qty.	Description
0	640086A	1	Carburetor (Incl. 184 Of Engine Parts List)
1	632166A	1	Throttle Shaft And Lever Assembly
2	632169	1	Spring-Trottle, Return
4	631184	1	Washer-Dust Seal
5	631183	1	Seal-Dust
6	631616	1	Throttle-Shutter
7	650506	2	Screw-Shutter
10	632553	1	Choke Shaft And Lever Assembly
14	31837	1	Shutter-Choke
15	630735	1	Spring-Positioning, Choke
16	632164	1	Fitting-Fuel
25	631867	1	Bowl-Float
26	632386	1	Spring-Float, Dampening
27	631024	1	Shaft-Float
28	632019	1	Float
29	631028	1	O-Ring-Float Bowl
30	631021	1	Inlet Needle, Seat & Clip (Incl. 31)
31	631022	1	Clip-Spring
36	640080	1	Tube-Nozzle, Main
37	632547	2	O-Ring, Main Nozzle Tube
40	640301	1	Nut-Bowl, High Speed
44	27110A	1	Bowl Nut Washer
48	631027	1	Welch Plug, Vent

Ref	Part No.	Qty.	Description
60	632760	1	Repair Kit

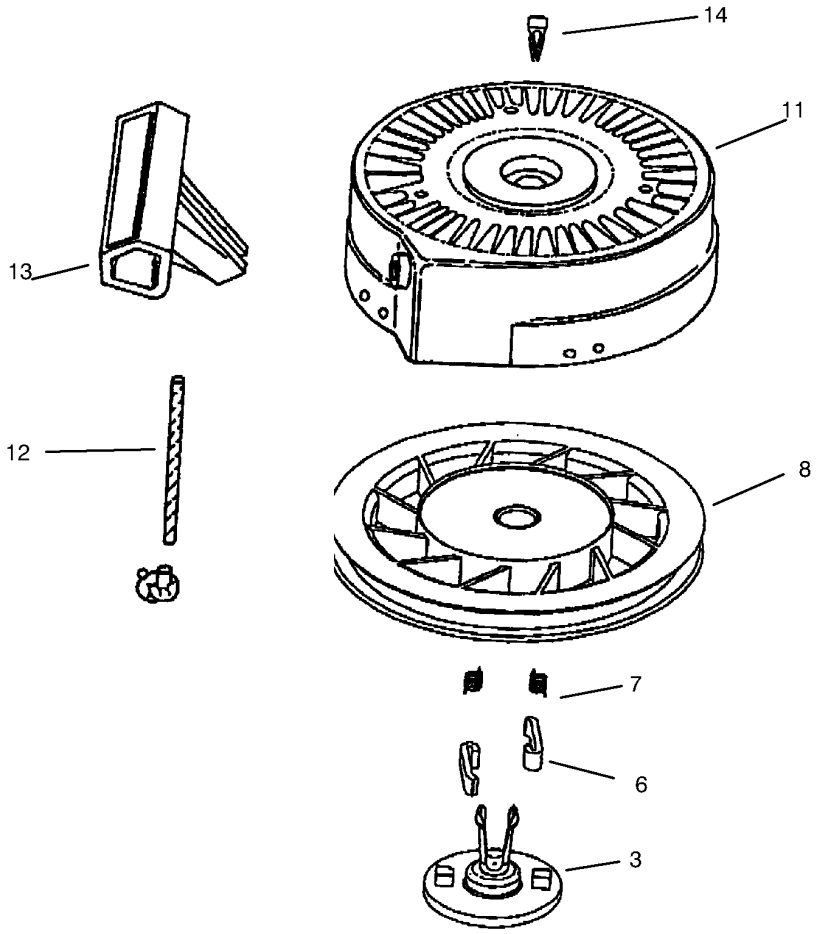

Recoil Starter Assembly No. 590743
Tecumseh Hsk635 Type 1723c

Ref	Part No.	Qty.	Description
❶0	590743	1	Rewind Starter Assembly
3	590740	1	Retainer
6	590616	2	Dog-Starter
7	590617	2	Spring-Dog
8	590645A	1	Pulley And Rewind Spring Assembly
11	590643A	1	Starter Housing ASM
12	590535	1	Rope-Starter (Length 98in X 9/64in Dia
13	590701	1	Handle-Starter
14	590760	1	Clip-Spring

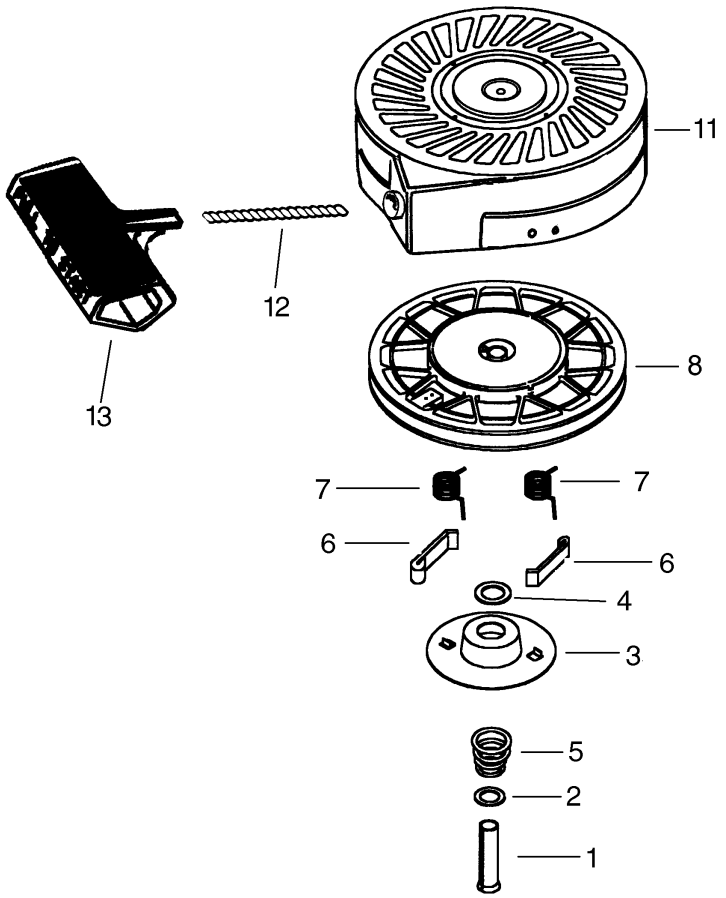

Recoil Starter Assembly No. 590712 (Optional)
Tecumseh Hsk635 Type 1723c

Ref	Part No.	Qty.	Description
0	590712	1	Rewind Starter Assembly (Optional)
1	590599A	1	Spring Pin (Incl. Ref. #4)
2	590600	1	Washer
3	590696	1	Retainer
4	590601	1	Washer
5	590697	1	Spring-Brake
6	590698	2	Dog-Starter
7	590699	2	Spring-Dog
8	590709	1	Pulley And Rewind Spring ASM
11	590713	1	Starter Housing Assembly
12	590535	1	Rope-Starter (Length 98in X 9/64in Dia
13	590701	1	Handle-Starter

NOTES

NOTES

NOTES


TORO®