Form Number 3350-525 Rev A

8-Blade DPA Reel Mower
Greensmaster® 3000 Series

Model No. 04610 - 240000001 and up.

Parts Catalog

Ordering Replacement Parts
To order replacement parts, please supply the part number, the quantity, and the description of each part desired.

Understanding Reference Numbers
Each Identified part in an illustration has a reference number. The reference number for a part also appears in the parts list, along with other information about the part.

This catalog uses two special reference number formats, one to indicate parts in a service assembly and another to indicate the quantity of a given part in an illustration.

Service Assembly Reference Numbers
Parts in service assemblies have reference numbers in the form a:b. The a represents the reference number of the entire service assembly and the b represents a sequential number unique to each part within the service assembly.

For example, a wheel assembly might be identified by reference number 6, the tire by 6:1, the valve by 6:2, and the wheel by 6:3. When you order the assembly identified by reference number 6, you receive all parts identified by reference numbers 6:1, 6:2, and 6:3. However, you may also order any part individually. Reference numbers of this type appear in illustrations and in part lists.

Reference Numbers Indicating Quantity
In an illustration, if a reference number indicates more than one part, the reference number has the form nX y. The n represents the quantity of the part, the X is the multiplication symbol, and the y represents the reference number.

For example, in an illustration, the reference number 2X 37 means that two of the parts identified by reference number 37 are indicated.

©The Toro Company - 2004
All Rights Reserved

Register your product at www.Toro.com

Contents

Description	Page	Description	Page
Frame Assembly	 3	Rear Roller Assembly	 5
Blade Assembly	 4	Attachments and Accessories List	 6

Part Description Abbreviations

Part descriptions in this catalog may include the following abbreviations.

AR	as required	HYD	hydraulic
ASM	assembly	INC	incorporated
CARR	carriage	LH	left hand
DEG	degrees	NI	nylon insert
FH	flat head	PPH	phillips pan head
GA	gauge	PTH	phillips truss head
HF	hex flange	PTO	power take off
HH	hex head	RH	right hand
HHF	hex head flange	SFH	slotted fillister head
HHFTF	hex head flange thread forming	SHH	slotted hex head
HJ	hex jam	SHWH	slotted hex washer head
HLH	hex lag head	SPH	slotted pan head
HOC	height-of-cut	SQH	square head
HS	hex	SRH	slotted round head
HSBH	hex socket button head	STD	standard
HSFH	hex socket flat head	TAP	self tapping
HSH	hex socket head	TTH	torx truss head
HWH	hex washer head	WH	wing head
HWHTF	hex washer head thread forming		

Footnotes

❶ Not illustrated

❷ Not serviced separately

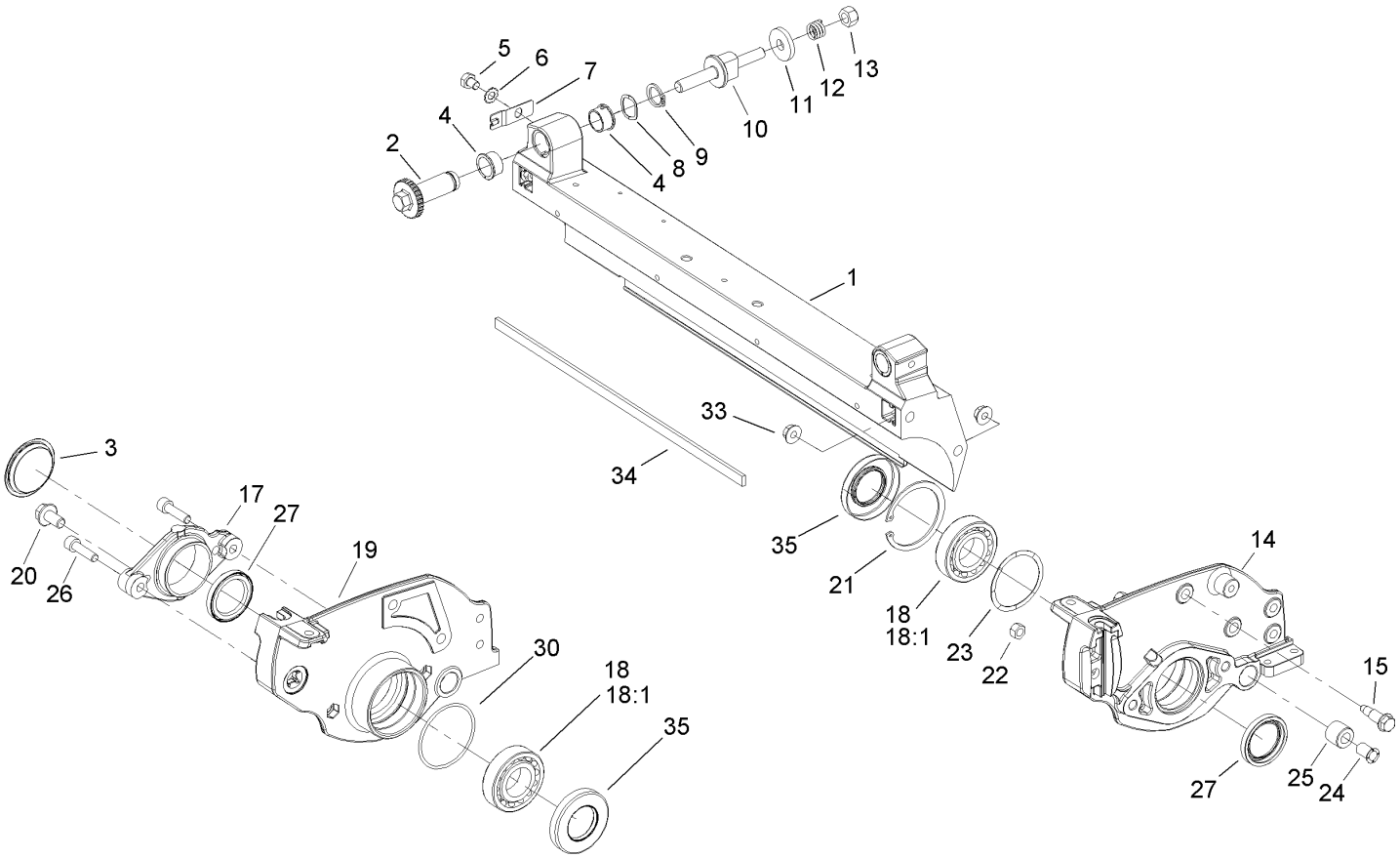

Frame Assembly

Ref	Part No.	Qty.	Description
1	105-5799	1	Frame
2	106-5363	2	Shaft-Adjuster
3	2410-30	1	Cap-Plastic
4	106-5344	4	Bushing-Flange, Keyed
5	33114-010	2	Screw-HH
6	3255-8	2	Washer-Lock
7	99-2097	2	Detent
8	106-5335	2	Washer-Wave
9	32120-93	2	Ring-Retaining
10	99-2096	2	Screw-Adjuster, Bedbar
11	99-2098	2	Washer
12	99-3755	2	Spring-Compression
13	33025-00	2	Nut-Lock
14	105-5795	1	Plate-Side, LH
15	105-5774	4	Bolt-Shoulder
17	104-9447	1	Adapter-Motor
❷18		2	Bearing-Packed, Grease
18:1	93-2489	1	Bearing
19	105-5797	1	Plate-Side, RH
20	106-2633	2	Screw-HHF
21	106-6914	1	Ring-Snap, Internal
22	33024-00	2	Nut-Lock
23	105-5700	1	Washer-Wave
24	52-2890	2	Bushing-Nylon

Ref	Part No.	Qty.	Description
25	63-9510	2	Bushing
26	94-3559	2	Screw-Sh
27	253-134	2	Seal-Grease
30	106-2607	1	O-Ring
33	98-0668	4	Nut
34	106-2619	1	Strip-Seal
35	106-6926	2	Seal-Grease

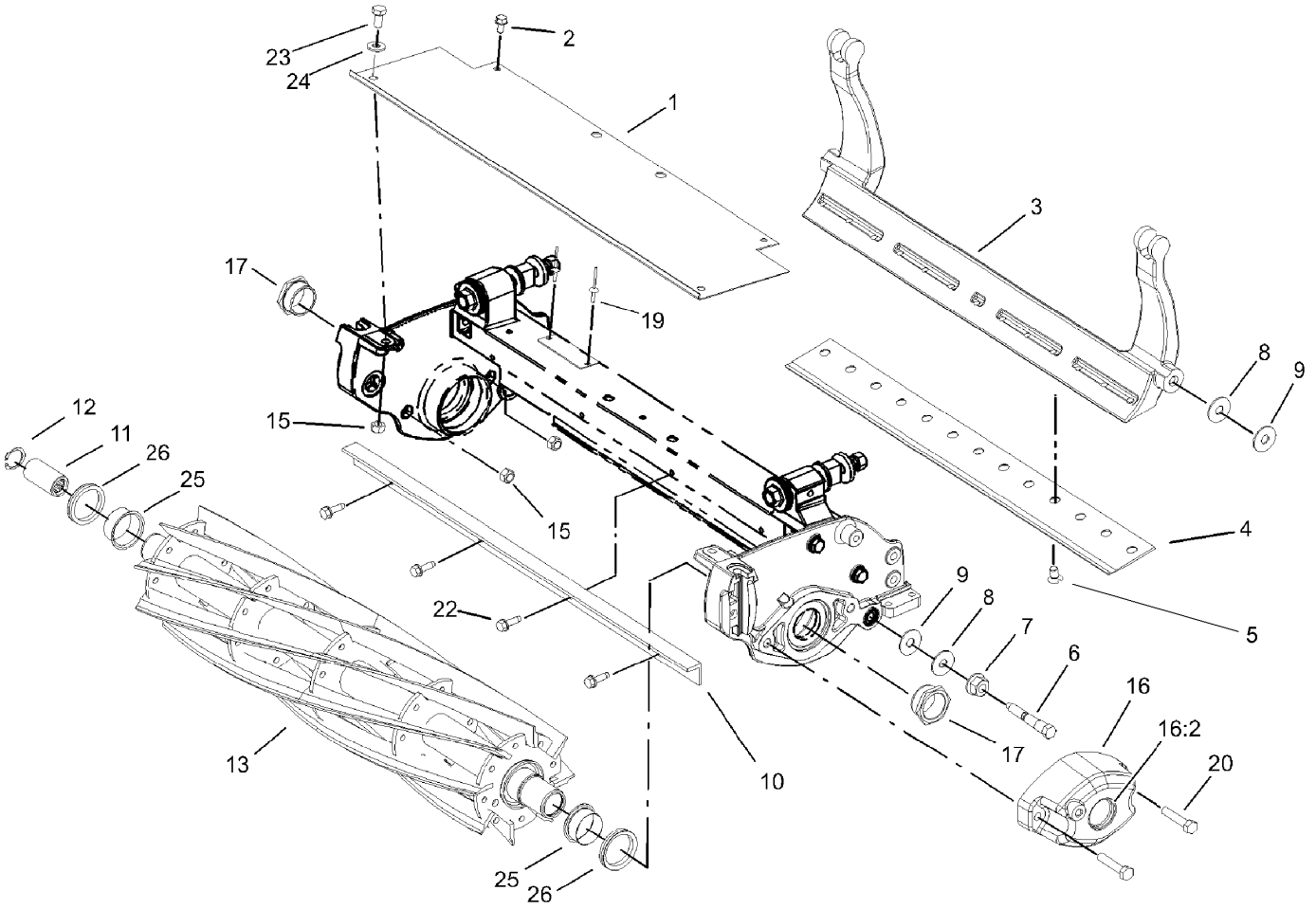

Blade Assembly

Ref	Part No.	Qty.	Description
1	106-2600-01	1	Shield-Grass
2	104-2628	2	Screw-HWH
3	106-2648-01	1	Bedbar
❶4	63-8600	1	Bedknife-Fairway
❶4	93-4262	1	Bedknife-Microcut
4	93-4263	1	Bedknife-Tournament Cut
❶4	93-4264	1	Bedknife-Low Cut
❶4	94-6392	1	Bedknife-Highcut
5	57-4910	13	Screw-Special
6	65-6270	2	Bolt-Bedbar
7	32128-48	2	Nut-HHF
8	52-2860	4	Washer
9	52-2900	4	Washer-Plastic
10	106-6924-03	1	Bar-Cutoff
11	94-4507	1	Coupler-Splined
12	105-5775	1	Ring-Retaining
13	105-5793	1	8 Blade Reel ASM
15	33024-00	4	Nut-Lock
16	105-5709	1	Weight ASM
16:2	105-5708	1	Plug-Expansion
17	105-5706	2	Nut-Lock, Bearing
19	3290-55	2	Rivet-Pop
20	33114-040	2	Screw-HH
22	56-6380	4	Screw

Ref	Part No.	Qty.	Description
23	33114-016	2	Screw-HH
24	3256-2	2	Washer-Flat
25	106-6927	2	Sleeve-Speedi
26	106-6929	2	V-Ring

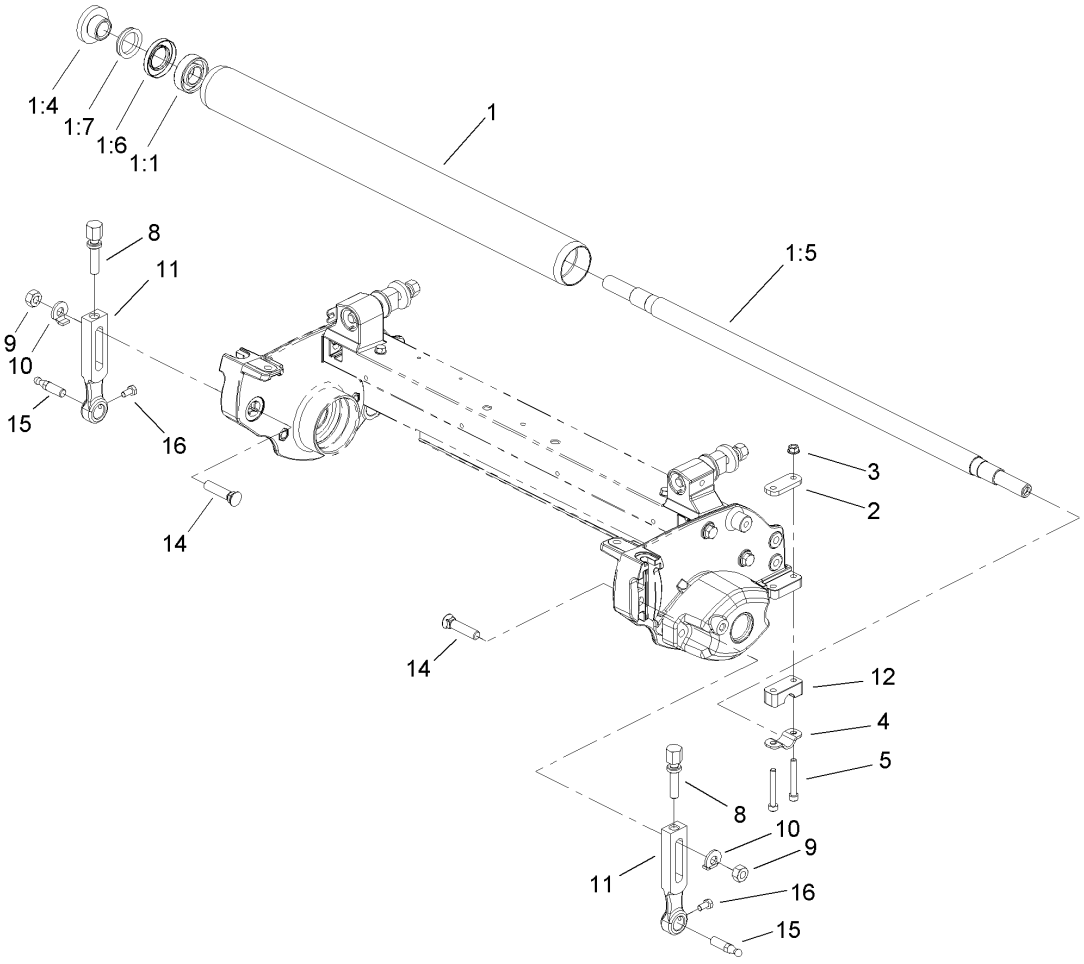

Rear Roller Assembly

Ref	Part No.	Qty.	Description
1	106-6945	1	Full Roller ASM
1:1	251-347	2	Bearing-Ball
1:4	106-6939	2	Nut-Lock, Bearing
1:5	106-6940	1	Shaft-Roller
1:6	106-6941	2	Seal
1:7	106-6942	2	V-Ring
2	105-5711	2	Shim-Roller
3	33003-00	4	Nut-HF
4	105-5712	2	Retainer-Shaft
5	106-2603	4	Screw-Sh
8	106-2635	2	Screw-HOC
9	106-4668	2	Nut-Lock
10	104-2603	2	Washer-HOC
11	107-3502	2	Arm-HOC
12	105-5710	2	Spacer-Roller
14	105-5342	2	Bolt-Plow
15	94-2958	2	Stud-Ball
16	33113-012	2	Screw-HH

Attachments and Accessories

For 04610 - 8-Blade DPA Reel Mower, Greensmaster 3000 Series

Product Name	Model/Part
Wiehle Roller Kit	04424
Full Roller Kit	04625
Narrow Wiehle Roller Kit	04626
Wide Wiehle Roller Kit	04627
DPA Reel Mower Groomer, Greensmaster 3150	04630
DPA Reel Mower Groomer, Greensmaster 3250-D	04631
DPA Reel Mower Rear Roller Brush, Greensmaster 3150-D	04640
DPA Reel Mower Rear Roller Brush, Greensmaster 3250-D	04641
DPA Reel Mower Rear Roller Scraper Kit	04646
5 Blade Heavy Duty Reel Assembly	106-2626
Wiehle Roller Scraper Kit (.20 spacing)	106-4661
Wiehle Roller Scraper Kit (.93 spacing)	106-4662
Full Roller Scraper Kit	106-4663
Full Roller Scraper / Brush Kit	106-4664
High Height-of-Cut Kit	106-4699
Shim	106-6923
Replacement Seal Kit	106-6937
Extended Grass Shield Kit	107-3503-01
Brush Kit	107-8125
Bedknife-Fairway	63-8600
Bedknife-Microcut	93-4262
Bedknife-Tournament Cut	93-4263
Bedknife-Low Cut	93-4264
Bedknife-Highcut	94-6392

NOTES


TORO®