Form No. 3352–711

Brake Kit
Pro Sweep 5200
Model No. 07086

Installation Instructions

1. Park the sweeper on a level surface.
2. Raise the left wheel off of the floor and place support blocks under the sweeper frame.
3. Remove the lug nuts securing the left wheel and tire assembly to the wheel hub (Fig. 1). Remove the tire and wheel assembly.

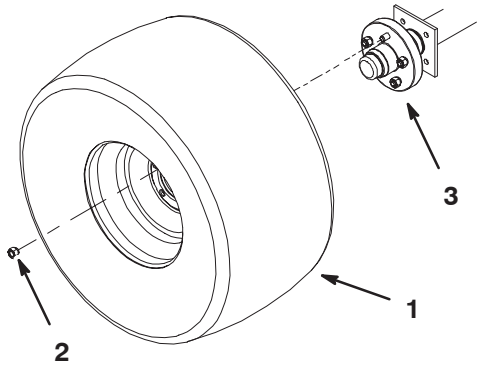

Figure 1

1. Wheel & tire assembly
2. Lug nut
3. Wheel hub

4. Remove the grease cap, cotter pin, castle nut and washer securing the wheel hub to the axle shaft (Fig. 2). Remove the wheel hub from the axle shaft. Make sure all the wheel hub components are off the shaft and that the shaft is free of any debris.

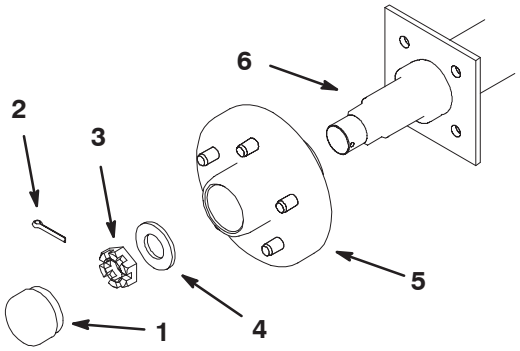

Figure 2

1. Grease cap
2. Cotter pin
3. Castle nut
4. Washer
5. Wheel hub
6. Axle

5. Insert the left brake assembly onto the axle shaft and secure it to the wheel hub with (4) 7/16” nuts. Position the brake assembly onto the axle as shown in figure 3.

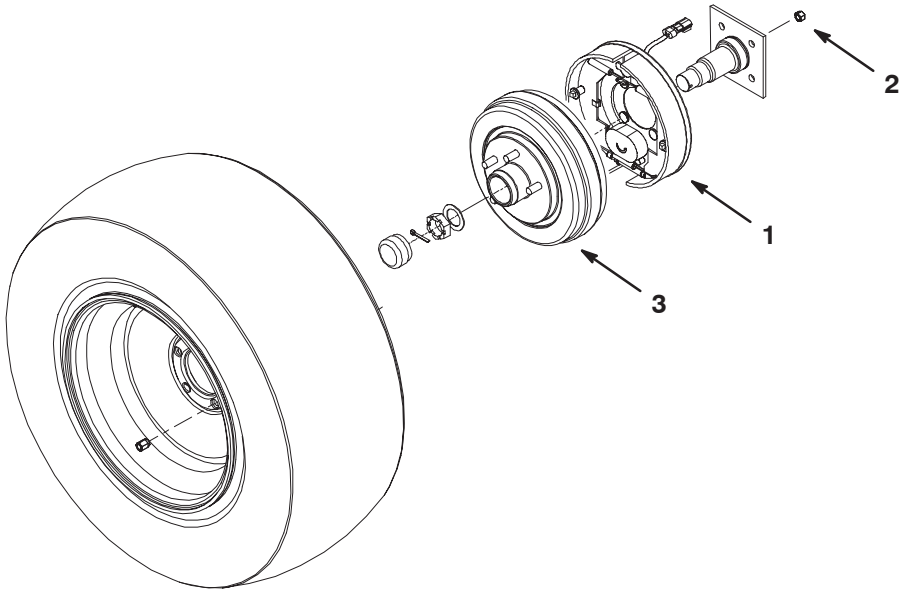

Figure 3

1. Left brake assembly
2. Nut, 7/16”
3. Brake drum

© 2005 by The Toro Company
8111 Lyndale Avenue South
Bloomington, MN 55420-1196

All Rights Reserved
Printed in the USA

6. Mount the brake drum to the axle shaft with a washer, castle nut, cotter pin and grease cap, positioning the components as shown in figures 2 & 3.

7. Mount the new wheel and tire assembly to the brake drum with the (5) lug nuts included (Fig. 3).

8. Repeat the procedure on the right end of the axle.

9. Connect the brake harness to the left and right brake connectors (Fig. 4). The end of the harness with the two connectors is to be positioned at the right end of the axle.

10. Secure the brake harness to the axle in several places with wire ties.

11. Plug the brake harness into the sweeper harness (Fig. 4).

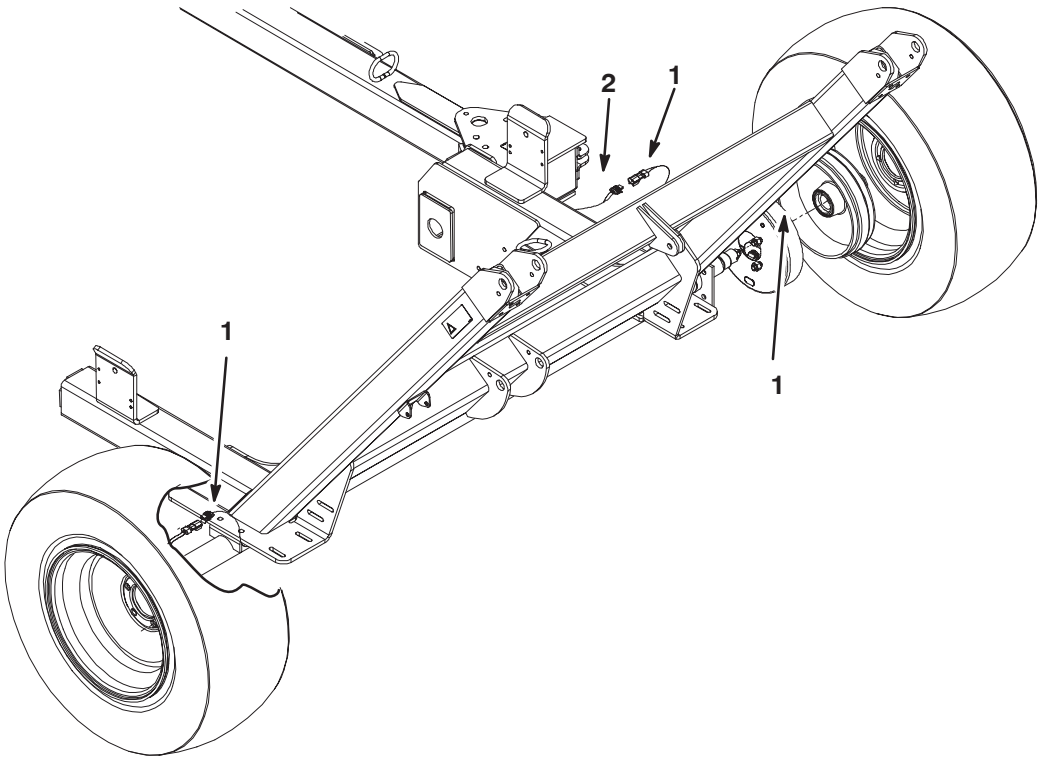

Figure 4

1. Brake harness
2. Sweeper harness

12. Using the brake controller as a template, locate, mark and drill two holes, 3/16 inch diameter, in the center of the flat part of the dash to the left side of steering wheel as shown in figure 5.

Note: If mounting the kit on a vehicle with a serial number prior to 239999999, refer to figure 6 for the brake controller mounting location.

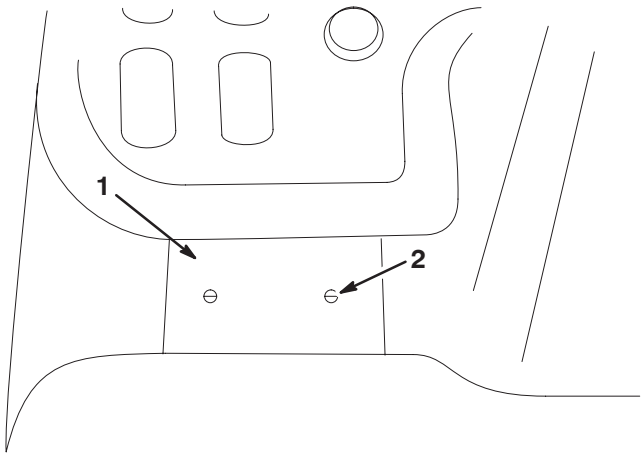

Figure 5

1. Flat panel, left side dashboard
2. Diameter of drill holes, 3/16 inch

13. Mount the brake controller to the dash panel, below the steering wheel, using the two #10–24 x 2 inch screws provided (Fig. 6 & 7).

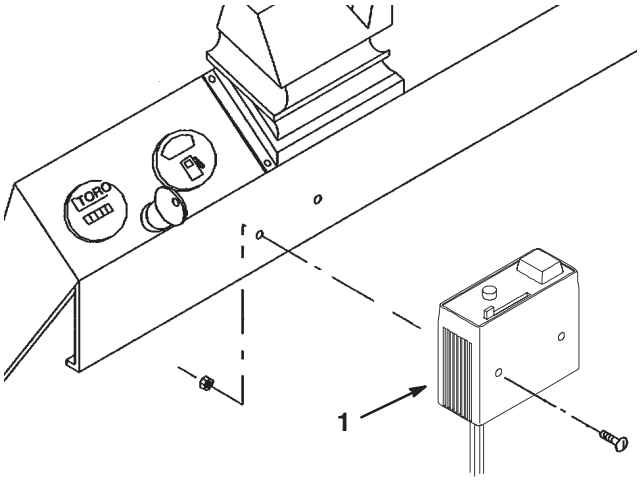

Figure 6

1. Brake controller

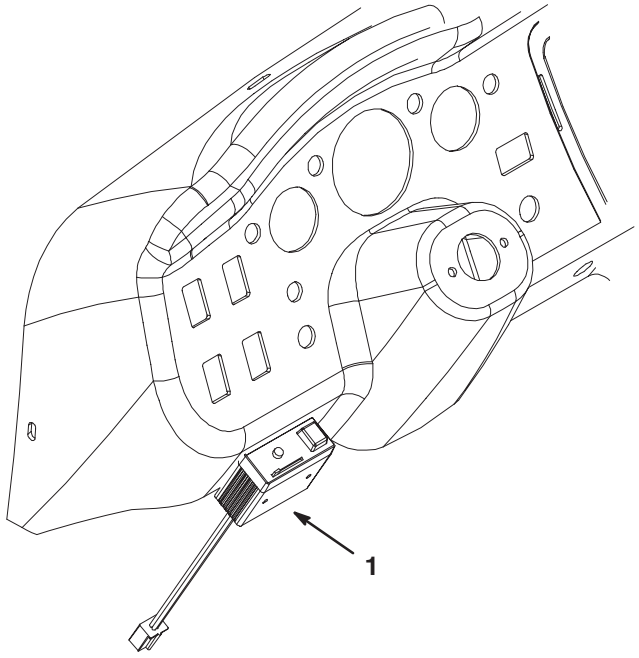

Figure 7

1. Brake controller

14. Install the wire harness:

A. Disconnect the battery.

B. Attach the 4-terminal connector to the electric brake controller's connector (Fig. 8).

C. Attach the 2-terminal connector (one green, one black) to the mating open connector (one white/black, one brown) from the Workman vehicle's wire harness (Fig. 8). This connector is located under the dash.

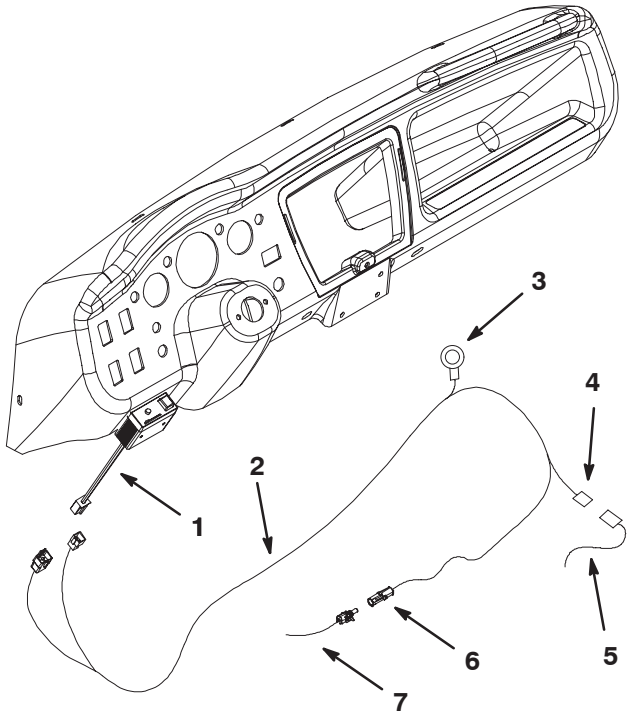

Figure 8

1. Brake controller harness
2. Brake control harness
3. Ring terminal (to ground)
4. To sweeper power harness
5. Sweeper power harness
6. To sweeper main harness
7. Sweeper main harness

D. Attach the harness ring terminal to the ground bolt near the vehicle fuse block (Fig. 8).

E. Route the wire harness alongside the main vehicle wire harness toward the rear of the vehicle.

F. Attach one of the remaining harness connectors to the sweeper power harness (from battery) and the other connector to the sweeper main harness (Fig. 8).

G. Secure the wire harness to the vehicle in several places with wire ties. Keep the harness away from any hot or rotating components.

H. Connect the battery.

Using the Brakes

The electric trailer brakes are designed to be actuated automatically whenever the brake pedal of the Workman Vehicle is depressed. The trailer brakes alone may be actuated by depressing the red manual override bar on top of the brake controller. Always assure the trailer brakes are connected and functioning properly before using the equipment.

1. Before operating, check to see if the controller is functioning by setting the brake output control to MAXIMUM and depressing and holding down the brake pedal of the Workman. The red light should glow red.

Note: The red light will not glow unless the sweeper implement electric brake harness is connected

2. Adjust the brake output control by initially setting at approximately 3/4 of the travel from MINIMUM towards MAXIMUM. With this adjustment, make a few slow speed test stops on dry pavement. Slide the control towards MAXIMUM for firmer braking and towards MINIMUM for lighter braking until the brakes are set just short of skidding on dry pavement. If uncertain about the adjustment, leave slide control setting at MAXIMUM.

3. Depressing the brake pedal of the Workman will cause simultaneous braking of all four Workman wheels and the sweeper. The trailer brakes alone can be actuated by pressing and holding the red button on the controller.

Warning

The brake controller case may become hot and cause burns through frequent application of trailer brakes.

- **DO NOT TOUCH when hot.**
- **Allow case to cool before performing any maintenance.**

4. Check brakes periodically and adjust when necessary.