FORM NO. 3312-954

TORO®

MODEL NO. 30790 — 70001 & UP
MODEL NO. 30562 — 70001 & UP
MODEL NO. 30555 — 70001 & UP
MODEL NO. 30568 — 70001 & UP
MODEL NO. 30575 — 70001 & UP

PARTS CATALOG

GROUNDSMASTER® 220

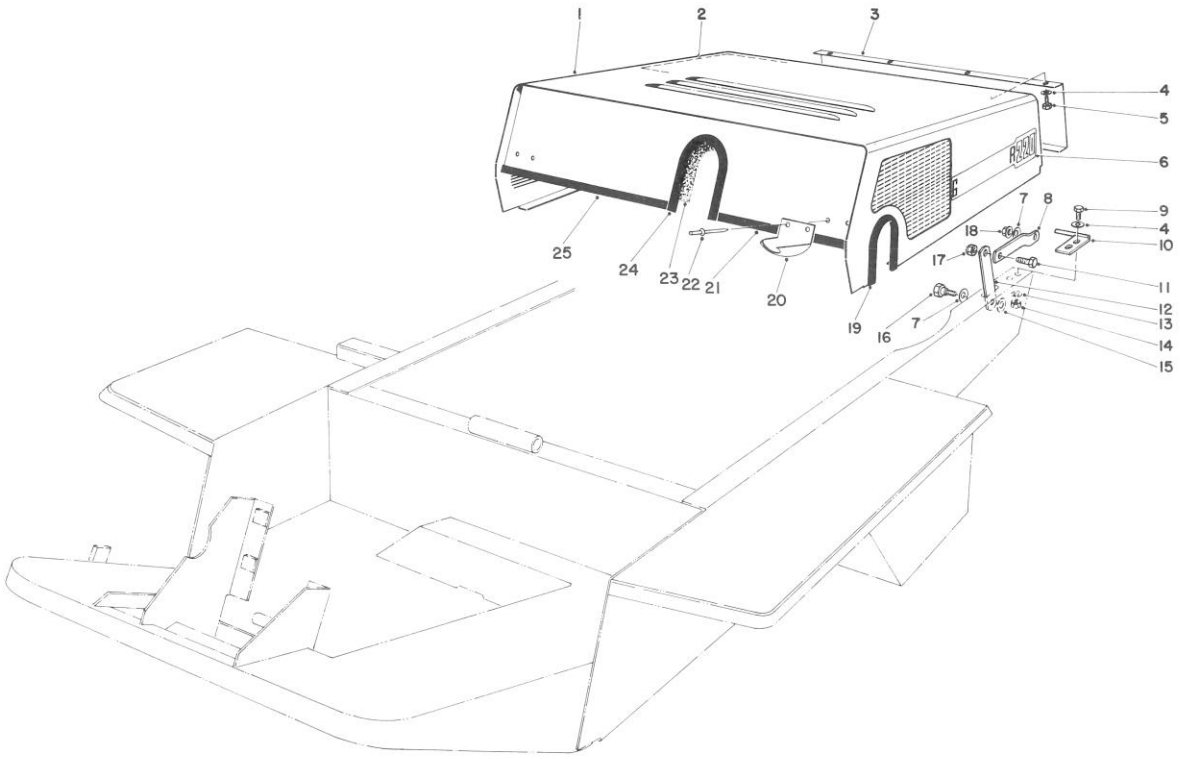

HOOD ASSEMBLY

Ref. No.	Part No.	Description	No. Used
1	12-5869	Hood	1
2	44-9040	Foam Strip — Hood (Rear)	1
3	44-8830	Grille — Rear Panel	1
4	3256-22	Washer	12
5	32140-16	Screw — Self Tapping Hex. Hd.	8
6	52-1470	Decal — Groundsmaster 220	2
7	3290-211	Washer — Lock Spring	4
8	27-6800	Link — Hood	2
9	321-4	Capscrew	4
10	27-4830	Pivot Pin L.H.	1
*	27-4800	Pivot Pin R.H.	1
11	3211-27	Screw — Cap Hex. Hd.	2
12	27-6810	Tie — Hood	2
			4

Ref. No.	Part No.	Description	No. Used
13	3253-3	Washer — Lock Spring	4
14	3217-5	Nut — Hex	4
15	4-2390	Washer	2
16	19-1470	Shoulder Screw	2
17	3296-5	Nut — Lock	2
18	32128-19	Nut — Flange	2
19	44-9190	Hood Trim	1
20	60-8660	Keeper	2
21	46-3320	Hood Trim	1
22	3296-16	Rivet — Pop	4
23	44-9030	Foam Strip — Hood (Front)	1
24	38-4070	Hood Trim	1
25	38-4080	Hood Trim	1

*Not Illustrated

©The Toro Company — 1986

PRICE $1.00

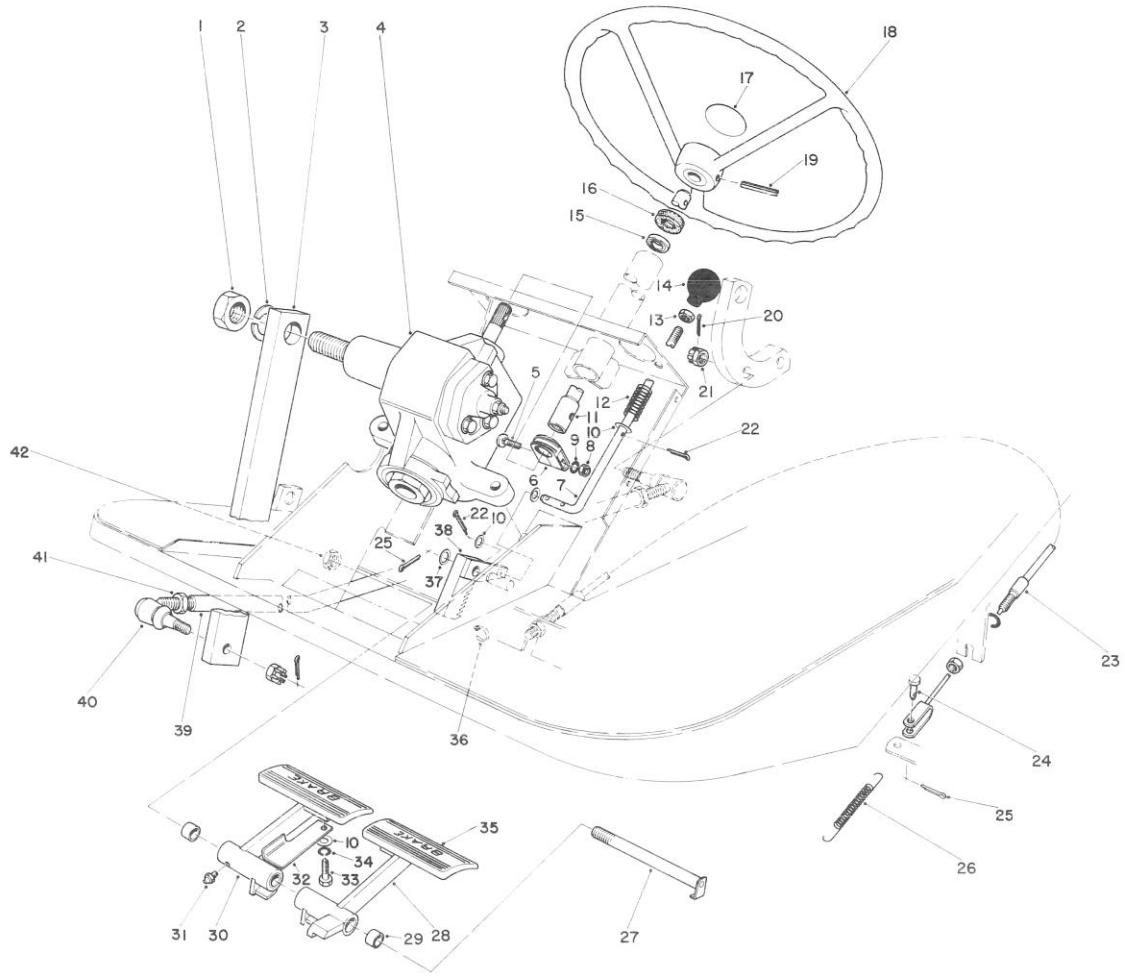

PEDALS AND STEERING WHEEL ASSEMBLY

Ref. No.	Part No.	Description	No. Used
1	3220-8	Nut	1
2	3253-28	Lockwasher	1
3	41-8880	Arm – Gear Box	1
4	41-8820	Steering Gear Assembly (Incl. Ref. #1 & 2)	1
5	3232-16	Bolt – Carriage	1
6	41-8830	Clamp – Coupling	1
7	27-3550	Rod – Brake Latch	1
8	3217-8	Nut – Hex	1
9	3253-6	Washer – Lock, Spring	1
10	3256-22	Washer – Plain Flat	4
11	41-8840	Steering Shaft	1
12	3-3251	Spring	1
13	3217-5	Nut – Hex	1
14	233-17	Knob	1
15†	251-275	Bearing – Ball	1
16	21-9260	Dust Cover	1
17	24-2090	Cap – Steering Wheel	1
18	25-6260	Steering Wheel	1
19	32121-10	Pin – Roll	1
20	3272-7	Cotter Pin	2
21	32136-4	Slotted Nut	2
22	3272-5	Pin – Cotter	3

Ref. No.	Part No.	Description	No. Used
23	21-3370	Brake Cable Assembly	2
24	283-58	Pin – Clevis	2
25	3272-10	Pin – Cotter	3
26	3-7243	Spring – Return	2
27	42-2540	Pin – Brake	1
28	41-8810	Brake Pedal L.H. (Incl. Ref. #29 & 31)	1
29	256-42	Bushing	4
30	41-8800	Brake Pedal R.H. (Incl. Ref. #29 & 31)	1
31	302-5	Grease Fitting	2
32	27-3560	Latch – Parking Brake	1
33	329-4	Screw – Cap, Hex Hd.	1
34	3253-3	Washer – Lock Spring	1
35	7-3900	Food Pad – Brake	2
36	3290-378	Plastic Ty-On	1
37	3256-26	Washer – Plain Flat	2
38	42-3220	Rack	1
39	27-3390	Tube – Front Steering	1
40	21-0140	Socket Assembly R.H. (Incl. Ref. #21)	2
41	3220-5	Nut – Hex Jam	2
42	3296-33	Nut – Lock, Nylon Insert	1

†Included with Steering Post Bracket Assembly, Ref. Page 6, Item 43.

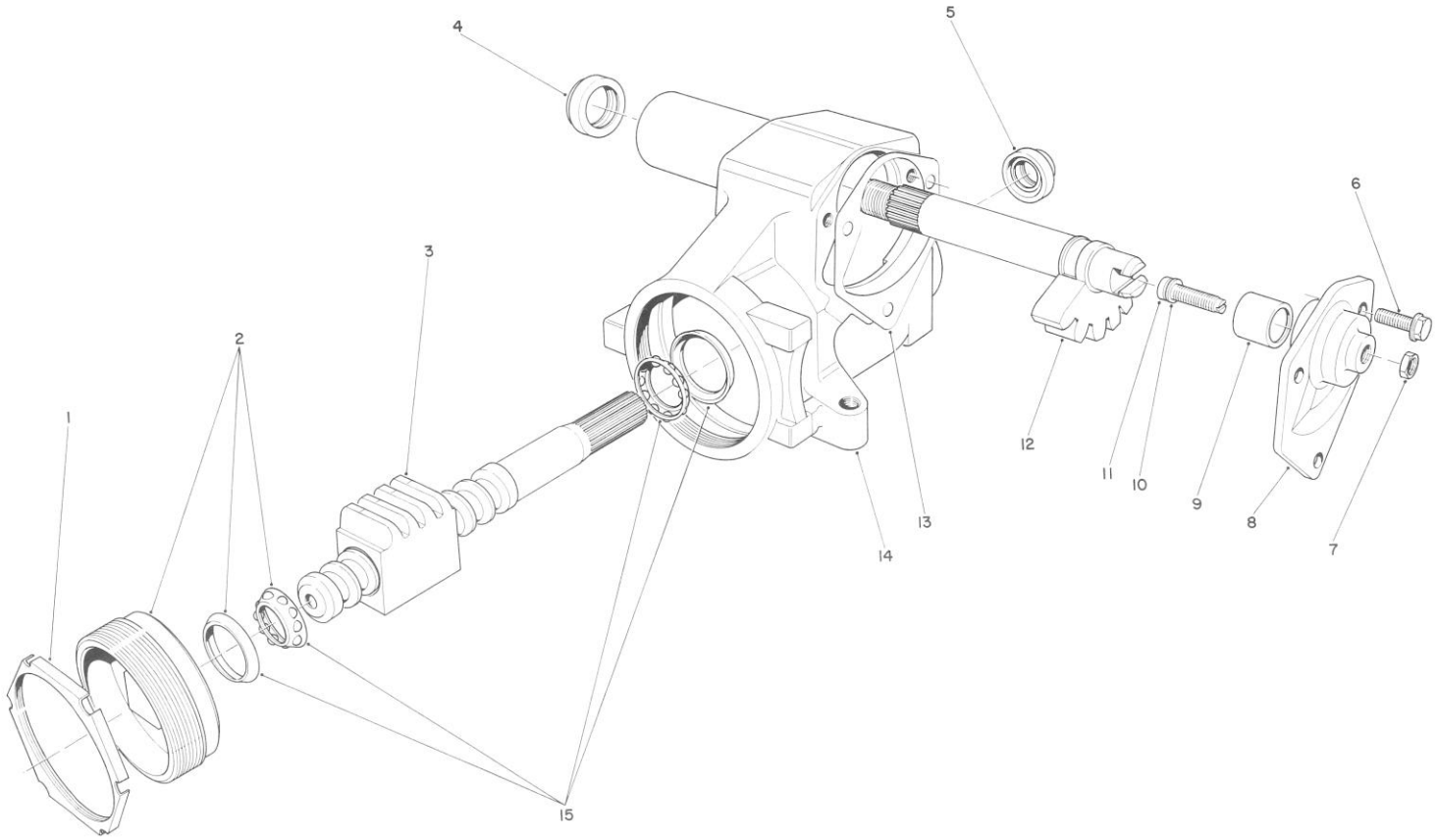

STEERING GEAR ASSEMBLY NO. 41-8820

Ref. No.	Part No.	Description	No. Used
1	5676217	Nut – Adjuster Lock	1
2	5666681	Adjuster Assembly	1
3	7812946	Worm Assembly – Steering	1
4	7801626	Seal	1
5	7802160	Seal	1
6	7807009	Hex Head Flange Bolt	3
7	114495	Nut	1
8	7806748	Side Cover Service Kit (Incl. Ref. #6, 9, 11 & 13)	1

Ref. No.	Part No.	Description	No. Used
9		Bushing	1
10	605142	Shim Kit	1
11	7802482	Adjuster	1
12	7812834	Gear – Pitman Shaft	1
13	5666734	Gasket	1
14	5679292	Steering Gear Housing	1
15	5666693	Bearing Assembly – Worm Thrust	1

Note: Obtain parts from your local GMC, Chevrolet Dealer.

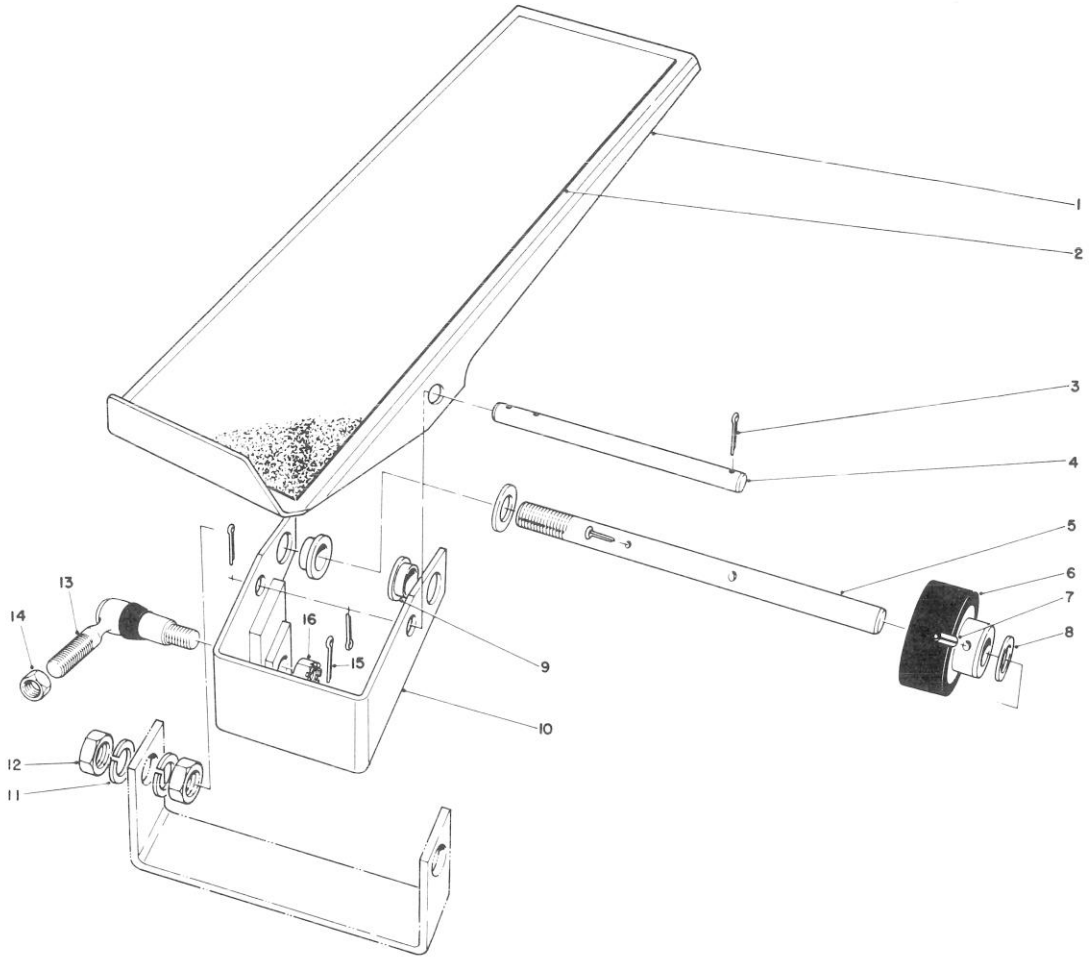

TRACTION PEDAL ASSEMBLY

Ref. No.	Part No.	Description	No. Used
1	29-5670	Traction Pedal	1
2	28-5130	Pad Pedal	1
3	3272-10	Cotter Pin	4
4	29-5630	Pivot Pin Pedal	1
5	29-5640	Shaft – Traction Pedal	1
6	28-5220	Friction Wheel Assembly	1
7	32121-16	Roll Pin	1
8	5-7570	Washer	2
9	256-156	Bushing	2

Ref. No.	Part No.	Description	No. Used
10	29-5600	Pivot Bracket Assembly (Incl. Ref. #9)	1
11	3253-7	Lockwasher	2
12	3218-5	Jam Nut	2
13	21-0140	Socket Assembly R.H. (Incl. Ref. #16)	1
14	3220-5	Jam Nut	1
15	3272-7	Cotter Pin	1
16	32136-4	Slotted Nut	1

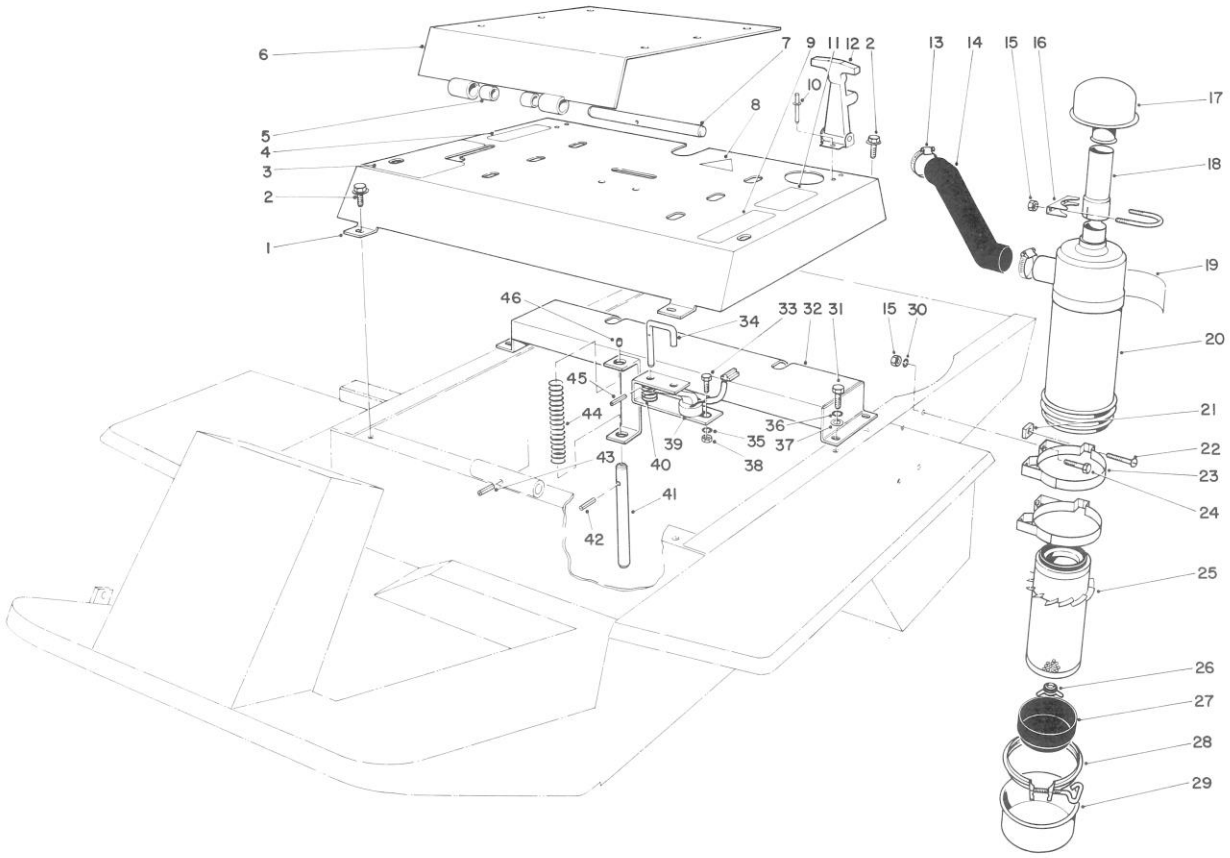

SEAT MOUNT AND AIR CLEANER ASSEMBLY

Ref. No.	Part No.	Description	No. Used
1	61-8140	Cover — Seat Support (Incl. Ref. #4, 5, 9 & 10)	1
2	46-8560	Screw — Hex Flange Hd.	4
3	27-4390	Decal — Hydraulic Lift	1
4	28-3290	Decal — Caution	1
5	256-173	Bushing	2
6	38-4020	Seat Mounting (Incl. Ref. #6)	1
7	27-4720	Shaft — Seat Pivot	1
8	43-8480	Decal — Danger	1
9	27-4620	Decal — Caution	1
10	3296-16	Rivet — Pop	4
11	27-7310	Decal — Refueling	1
12	60-8670	Draw Latch	2
13	2412-42	Hose Clamp	2
14	44-9050	Hose — Air Cleaner Inlet	1
15	3217-6	Nut — Hex	6
16	20-4840	Muffler Clamp	1
17	27-7180	Cap Assembly	1
18	44-8950	Tube — Air Cleaner	1
19	27-7160	Decal — Instruction	1
20	27-7100	Air Cleaner Assembly (Incl. Ref. #18 & 24-28)	1
21	32107-11	Nut — Square	2
22	3258-19	Machine Screw	2

Ref. No.	Part No.	Description	No. Used
23	27-7170	Band Assembly Mounting (Incl. Ref. #20 & 21)	2
24	322-3	Screw — Cap Hex. Hd.	4
25	27-7110	Element Assembly	1
26	27-7120	Nut & Gasket Assembly	1
27	27-7140	Skirt — Baffle	1
28	27-7130	Clamp Assembly	1
29	27-7150	Cup Assembly	1
30	3253-4	Washer — Lock	4
31	323-5	Screw — Cap Hex. Hd.	4
32	37-9770	Seat Support	1
33	321-2	Screw — Cap Hex. Hd.	1
34	38-3170	Pin — Seat Switch	1
35	3253-3	Washer — Lock Spring	1
36	3253-21	Washer — Lock	4
37	3256-24	Washer — Plain	4
38	3217-5	Nut — Hex	1
39	29-6930	Switch Arm	1
40	3-6685	Spring	1
41	27-9870	Pin — Seat Switch	1
42	32121-6	Pin — Roll	1
43	32121-4	Pin — Roll	1
44	37-9590	Spring	1
45	32121-50	Pin — Roll	1
46	28-6180	Pin — Plastic	1

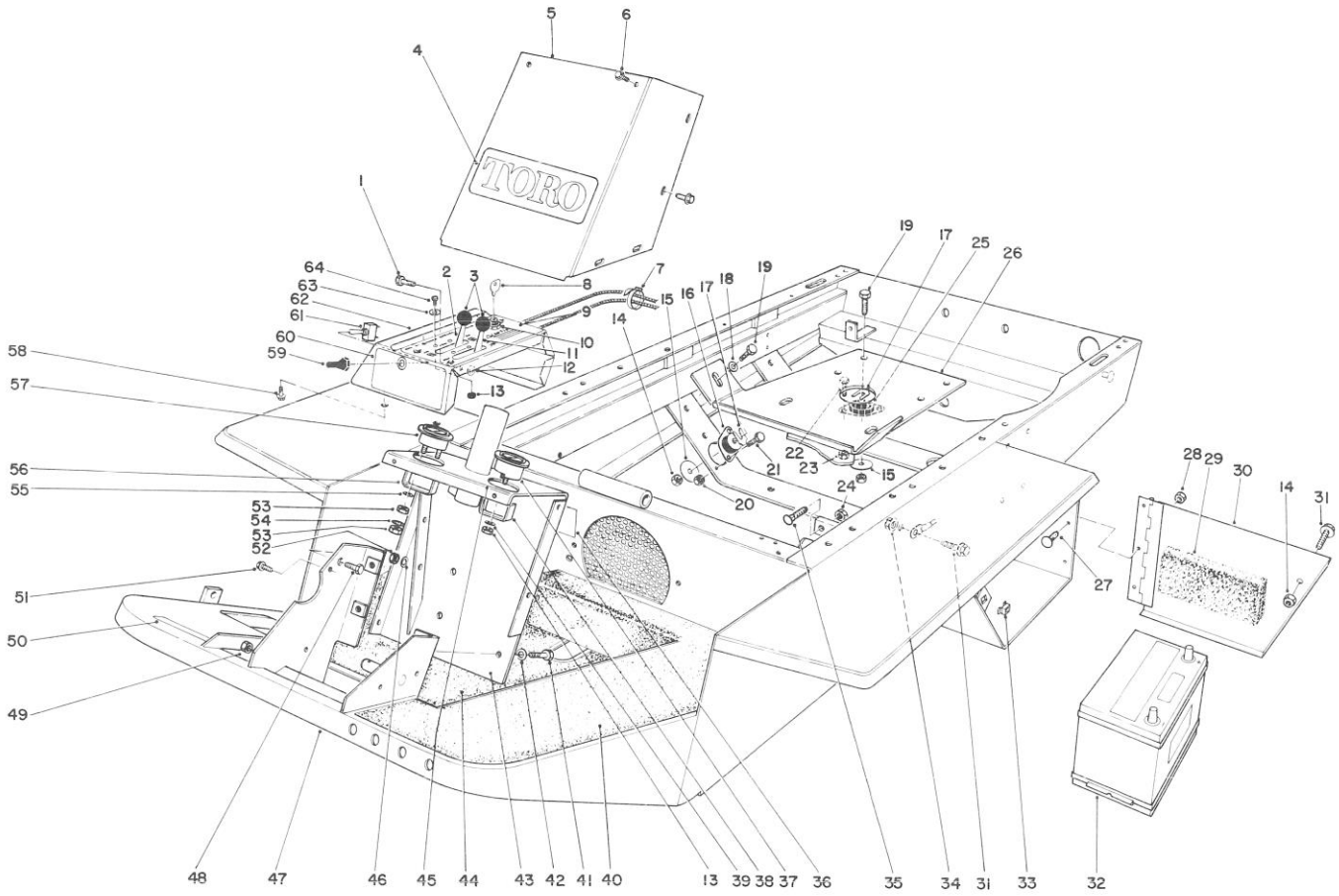

INSTRUMENT PANEL AND STEERING POST ASSEMBLY

Ref. No.	Part No.	Description	No. Used
1	321-4	Capscrew	1
2	44-9300	Control — Choke	1
3	233-35	Knob	2
4	43-5110	Decal — Toro	1
5	41-8900	Cover — Steering Tower	1
6	46-8560	Screw — Tapping Hex. Hd.	11
7	3290-378	Plastic Ty-On	1
8	218-412	Key (Set of 2)	1
9	44-9370	Decal — Instrument Panel	1
10	27-2360	Switch — Ignition	1
11	44-9250	Control Throttle	1
12	3256-22	Washer — Plain Flat	1
13	3217-26	Nut — Hex	5
14	3296-39	Nut — Lock Nylon Insert	5
15	28-1140	Washer	4
16	44-9390	Mount — Engine Rubber	2
17	42-6080	Shim — Axle	A/R
18	3256-24	Washer — Plain Flat	2
19	323-12	Screw — Cap Hex. Hd.	4
20	3296-29	Nut — Lock Nylon Insert	4
21	322-3	Capscrew	4
22	3290-134	Hex. Hd. Machine Screw	4
23	3296-2	Nut — Lock Nylon Insert	4
24	3218-3	Hex Jam Nut	1

Ref. No.	Part No.	Description	No. Used
25	18-8000	Rubber Mount	2
26	44-9320	Engine Base	1
27	3274-31	Screw —Cap Button Hd.	3
28	3296-42	Nut — Lock Nylon Insert	3
29	44-9460	Foam Strip — Battery Cover	1
30	44-8920	Battery Cover	1
31	3234-11	Screw — Cap Hex. Hd. w/Locking Flange	2
32		Battery Assy.	1
33	3290-433	Retainer — Grip Nut	1
34	3290-357	Nut — Hex. Hd. w/Locking Flange	1
35	3231-29	Carriage Bolt	1
36	53-4430	Decal — Oil	1
37	12-9990	Hour Meter	1
38	218-515	Mounting Bracket	1
39	3254-1	Washer — External Tooth	1
40	27-3250	Nonskid — Tunnel	1
41	324-6	Screw — Cap Hex. Hd.	3
42	3253-6	Washer — Lock, Spring	3
43	42-2580	Steering Post Bracket	1
44	27-3260	Nonskid Floor	1
45	41-8910	Decal — Instruction	1
46	3253-21	Washer — Lock Spring	1

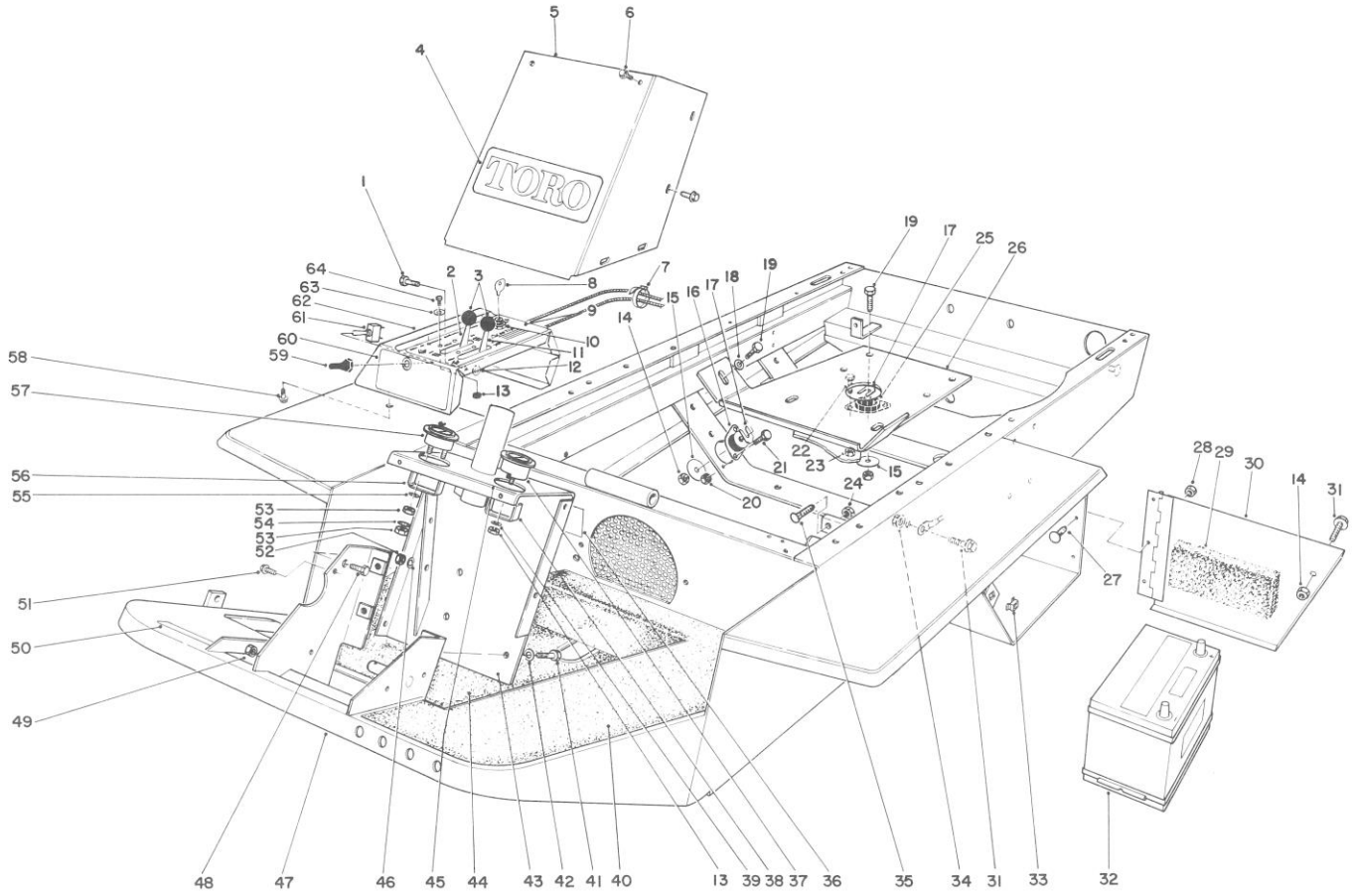

INSTRUMENT PANEL AND STEERING POST ASSEMBLY (Continued)

Ref. No.	Part No.	Description	No. Used
47	44-9170	Frame	1
48	323-5	Screw — Cap, Hex. Hd.	1
49	3296-42	Locknut	2
50	27-7320	Decal —Traction Pedal	1
51	32104-60	Screw — Self Tapping Hex. Washer Hd.	1
52	3217-7	Nut — Hex	1
53	3219-14	Nut — Brass	6
54	3254-8	Lockwasher	2
55	3256-21	Washer	2

Ref. No.	Part No.	Description	No. Used
56	39-9600	Mounting Clamp	1
57	33-0990	Ammeter	1
58	32104-116	Screw — Self Tapping Hex. Washer Hd.	2
59	218-473	Boot — Toggle Switch	1
60	46-3460	Decal — By-Pass	1
61	6-1659	Switch — Toggle (Incl. Ref. #58)	1
62	46-3350	Instrument Panel	1
63	3253-17	Washer — Lock Spring	4
64	3251-3	Rd. Hd. Machine Screw	4

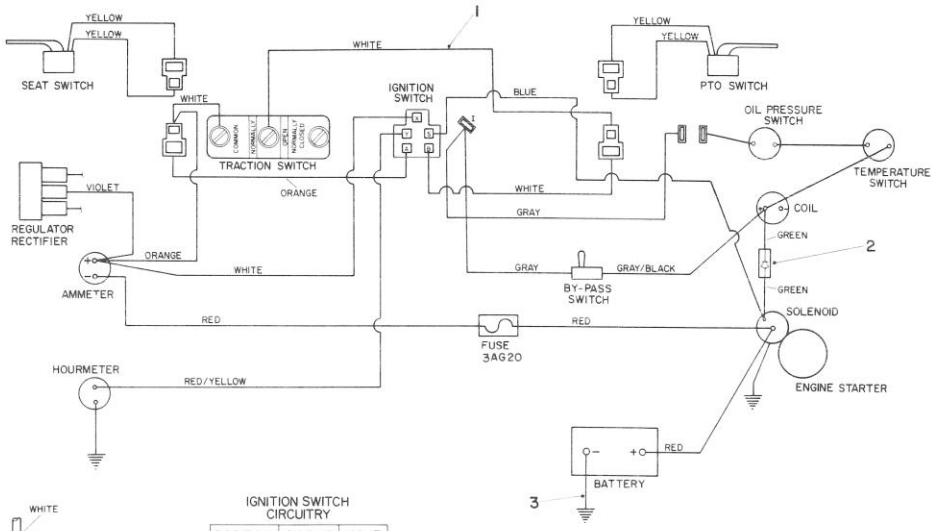

IGNITION SWITCH CIRCUITRY

POSITION	CIRCUIT	MAKE
1. OFF	NONE	–
2. RUN	B+I+A	X+Y
3. START	B+I+S	–

ELECTRICAL SCHEMATIC

Ref. No.	Part No.	Description	No. Used
1	62-3120	Wire Harness (Incl. Ref. #2)	1

Ref. No.	Part No.	Description	No. Used
2	62-3240	Jumper Wire Assy.	1
3	27-5090	Wire Battery Ground	1

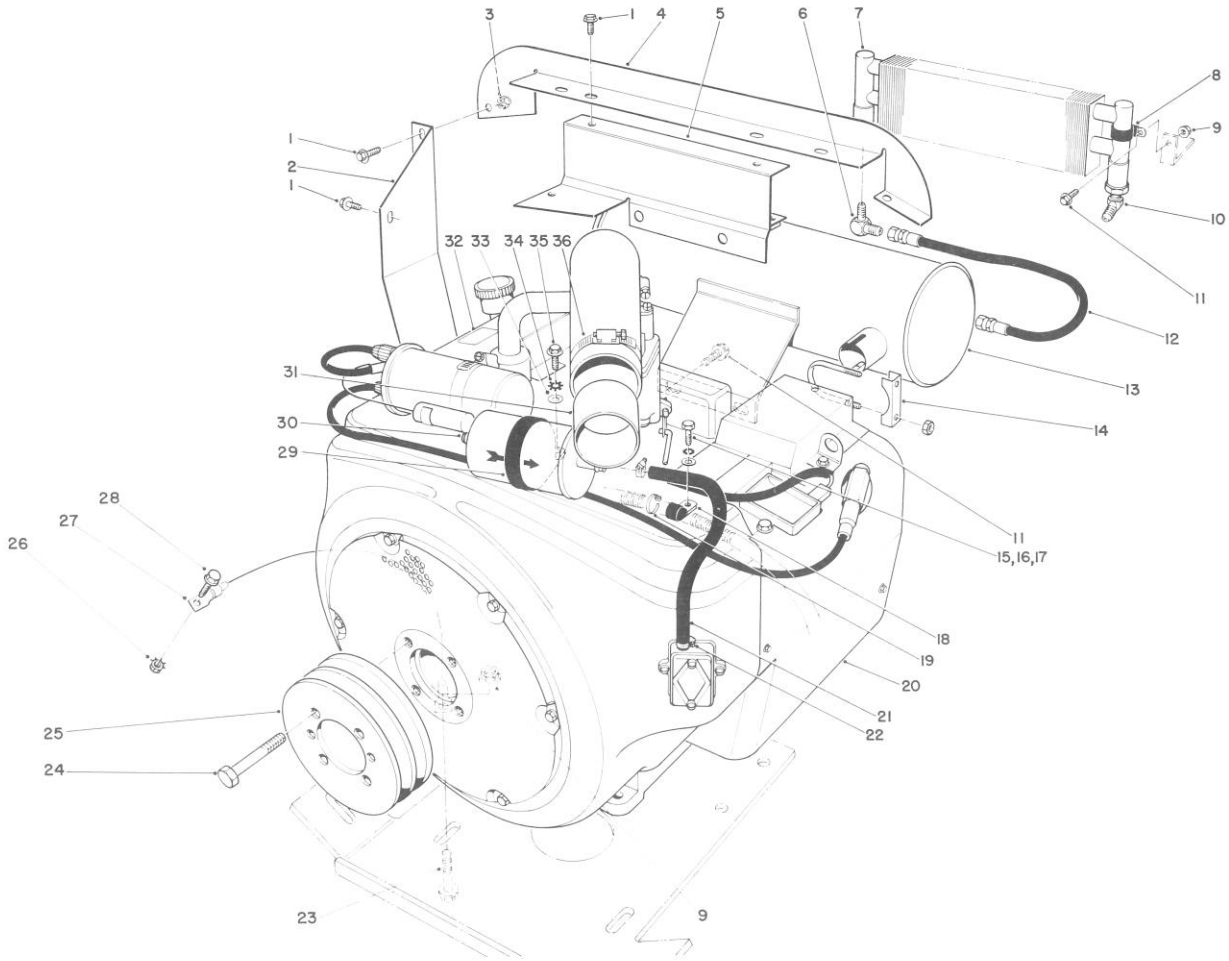

ENGINE ASSEMBLY

Ref. No.	Part No.	Description	No. Used
1	3234-13	Screw — Cap Hex. Hd. Flange	10
2	44-8690	Shield — Engine Heat	1
3	3296-16	Nut — Lock, Nylon Insert	1
4	44-8710	Shroud — Engine	1
5	44-9010	Bracket — Shield Support	1
6	353-428	Elbow — Male 90°	1
7	22-7320	Oil Cooler	1
8	2412-39	Clamp — R	2
9	3290-357	Nut — Hex. Hd. w/Locking Flange	4
10	353-714	Elbow — Male 45°	1
11	3234-11	Screw — Cap, Hex. Hd. w/Locking Flange	4
12	44-9020	Hose Assembly — Oil	1
13	44-8960	Muffler	1
*	46-2390	Muffler — Spark Arrestor (Optional)	1
14	2412-37	Clamp — Muffler	2
15	321-4	Capscrew	1
16	3253-3	Washer — Lock Spring	1
17	3256-22	Washer — Plain, Flat	1
18	2412-81	Clamp — R	1

Ref. No.	Part No.	Description	No. Used
19	3290-379	Tie Cable	1
20	61-9600	Engine (Onan Model No. B48G-GA020 Type No. 4348G	1
21	44-9060	Line — Fuel	1
22	2412-36	Hose Clamp	2
23	3234-18	Capscrew Hex. Flange	2
24	322-40	Screw — Cap, Hex. Hd.	4
25	43-5340	Pulley — Engine	1
26	32149-2	Nut — Lock	2
27	10-7160	Wire Assembly	2
28	3234-4	Capscrew Hex Flange	2
29	2412-96	Clamp — Filter	1
30	18-1520	Filter Gas	1
31	44-9450	Adapter — Air Inlet	1
32	42-4180	Decal — Head Service	1
33	3256-2	Flat Washer	1
34	3255-8	Washer — Lock, External Tooth	2
35	32144-10	Hex. Washer Hd. Thread Forming Screw	1
36	2412-42	Hose Clamp	1

*Not Illustrated

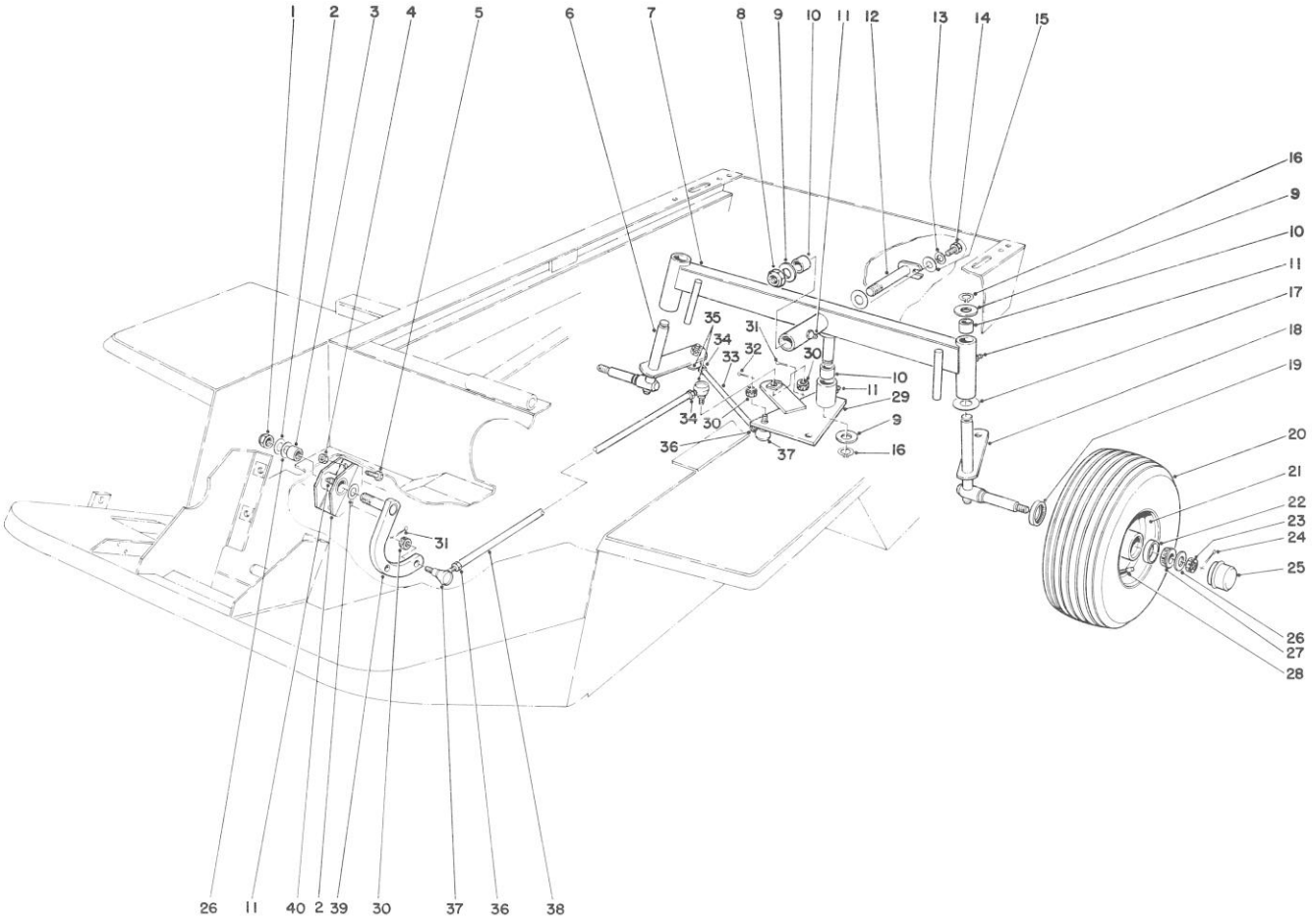

REAR AXLE ASSEMBLY

Ref. No.	Part No.	Description	No. Used
1	3296-15	Nut — Lock	1
2	3-6514	Washer — Thrust	2
3	252-6	Bearing	2
4	3296-44	Locknut	2
5	323-5	Screw — Cap, Hex. Hd.	2
6	39-8900	Spindle R.H.	1
7	44-9090	Rear Axle (Incl. Ref. #10 & 11)	1
8	3296-49	Nut — Lock, Nylon Insert	1
9	10-8110	Washer	4
10	3-0348	Bushing	8
11	302-5	Grease Fitting	4
12	27-4060	Pin - Rear Axle	1
13	3253-3	Lockwasher	1
14	321-2	Capscrew	1
15	3256-22	Washer — Plain, Flat	1
16	32151-36	Ring — Retaining Ext.	3
17	256-121	Bushing	2
18	39-8850	Spindle L.H.	1
19	253-129	Oil Seal	2
20	231-104	Tire	2
*	232-39	Inner Tube (Optional)	2
21	217-108	Rim (Incl. Ref. #22)	2
22	254-72	Bearing Cup	4

Ref. No.	Part No.	Description	No. Used
23	32136-5	Nut — Hex, Castle	2
24	3272-13	Cotter Pin	2
25	241-119	Dust Cap	2
26	3256-28	Washer — Plain, Flat	3
27	254-94	Bearing Cone	4
28	232-35	Valve Stem w/Cap	2
29	44-9120	Steering Plate (Incl. Ref. #10 & 11)	1
30	32136-4	Slotted Nut	6
31	3272-7	Cotter Pin	2
32	3272-6	Cotter Pin	4
33	27-4090	Tie Rod — Steering	2
34	3220-12	Nut — Hex Jam	3
35	21-0150	Socket Assembly L.H. (Incl. Ref. #30)	3
36	3220-5	Nut — Hex Jam	3
37	21-0140	Socket Assembly R.H. (Incl. Ref. #30)	3
38	44-9110	Tube — Rear Steering	1
39	27-5230	Pivot Arm	1
40	27-3640	Pivot Mount (Incl. Ref. #3 & 11)	1

*Not Illustrated

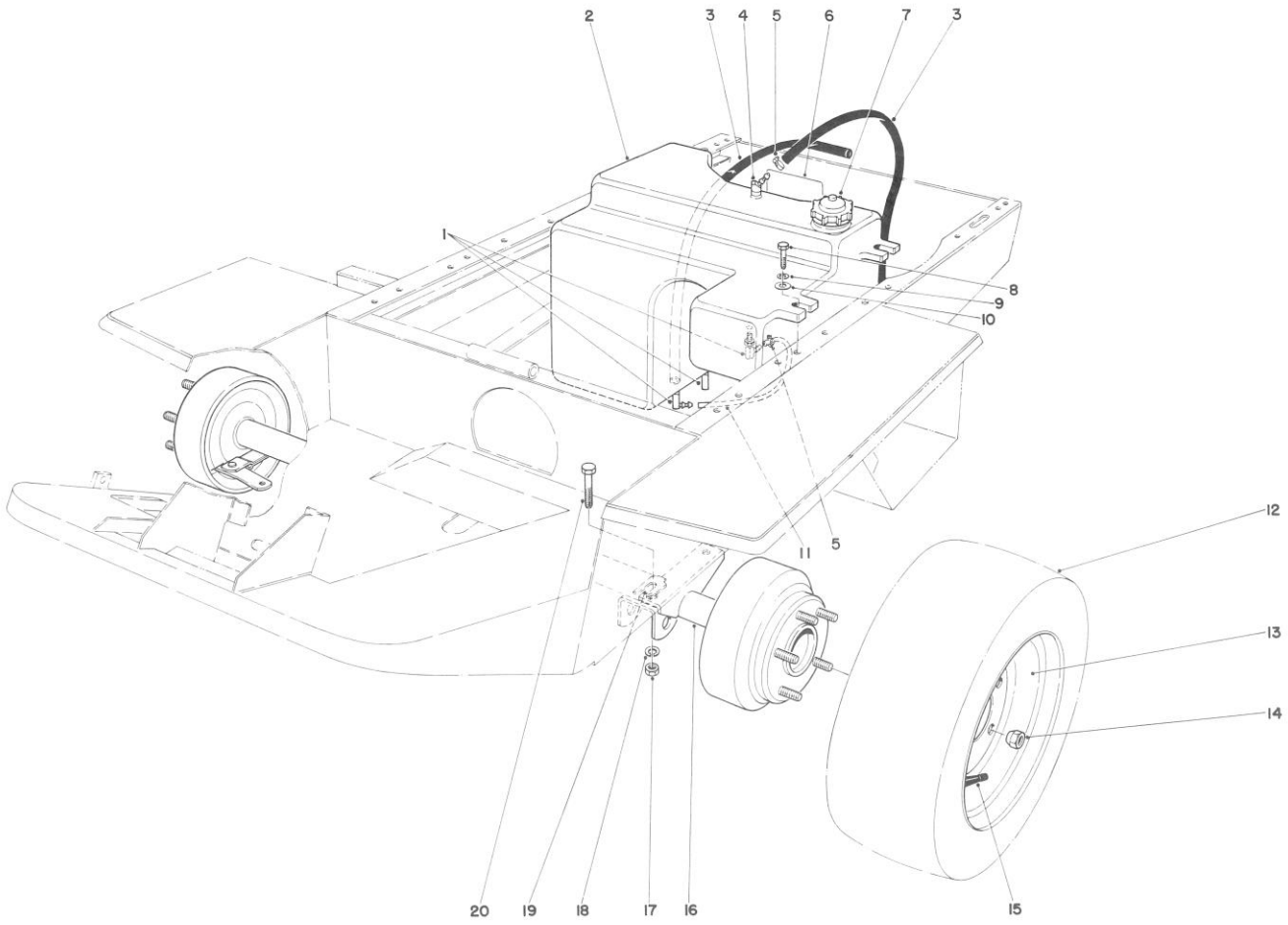

GAS TANK AND AXLE ASSEMBLY

Ref. No.	Part No.	Description	No. Used
1	353-536	90° Elbow	3
2	43-5350	Gas Tank (Incl. Ref. # 1 & 3)	1
3	37-9920	Hose	2
4	353-705	45° Elbow	1
5	2412-36	Clamp – Worm Drive	5
6	43-8480	Decal – Danger	1
7	55-3574	Gas Cap	1
8	323-19	Screw – Cap, Hex Hd.	3
9	3253-21	Lockwasher	3
10	3256-41	Washer – Plain	3
11	61-9650	Gas Line – Tank Connection	1

Ref. No.	Part No.	Description	No. Used
12	231-103	Tire	2
13	217-107	Rim	2
14	242-35	Nut – Hex	10
15	232-35	Valve Stem w/Cap	2
16	43-9040	Axle Assembly	1
17	3217-8	Nut – Hex	4
18	3253-6	Washer – Lock	4
19	42-6080	Shim Axle	A/R
20	324-9	Screw – Cap, Hex Hd.	4
*	232-43	Inner Tube (Optional)	2

* Not Illustrated

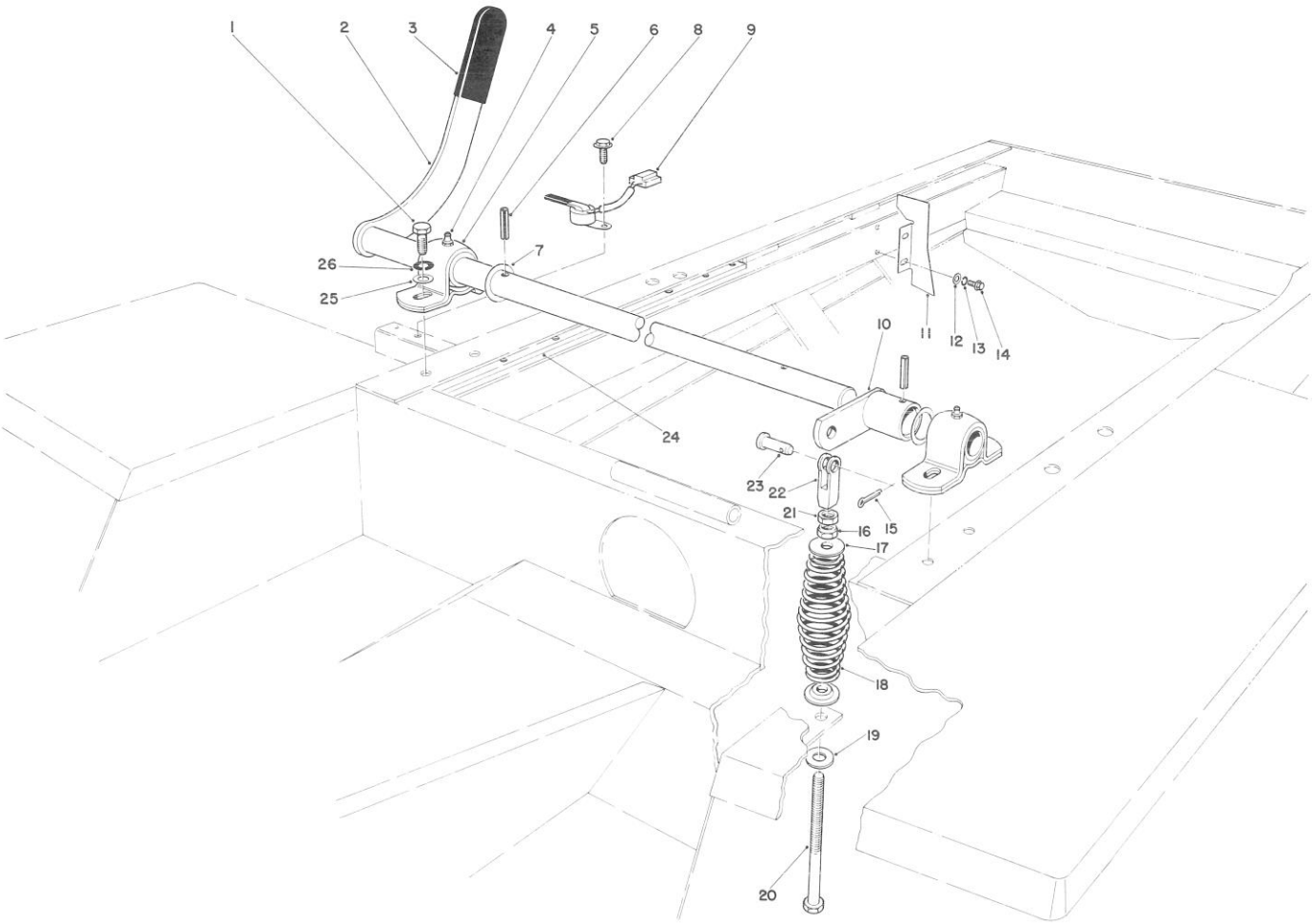

POWER TAKE OFF LEVER ASSEMBLY

Ref. No.	Part No.	Description	No. Used
1	321-4	Capscrew	4
2	27-4910	Power Take Off Lever	1
3	21-1880	Grip Handle	1
4	302-5	Grease Fitting	2
5	251-269	Bearing – Pillow Block	2
6	32121-31	Pin – Roll	2
7	3-6514	Washer	2
8	32104-116	Screw – Self Tapping Hex Washer Hd.	1
9	29-6930	Switch Arm	1
10	47-4780	Engagement Arm	1
11	44-8680	Shield – Heat	1
12	3256-23	Washer – Plain	2
13	3253-4	Washer – Lock Spring	2

Ref. No.	Part No.	Description	No. Used
14	32144-11	Screw – Self Tapping Hex Hd.	2
15	3272-5	Cotter Pin	1
16	3296-5	Nut – Lock	1
17	44-8890	Retainer – Spring	2
18	44-8820	Spring – Compression	1
19	3256-41	Washer – Plain	1
20	27-7900	Screw – Adjusting	1
21	3220-3	Nut – Hex Jam	1
22	282-1	Yoke	1
23	283-42	Pin – Clevis	1
24	37-7060	Bar – Frame Rail	2
25	3256-22	Washer – Plain	4
26	3253-3	Washer – Lock Spring	4

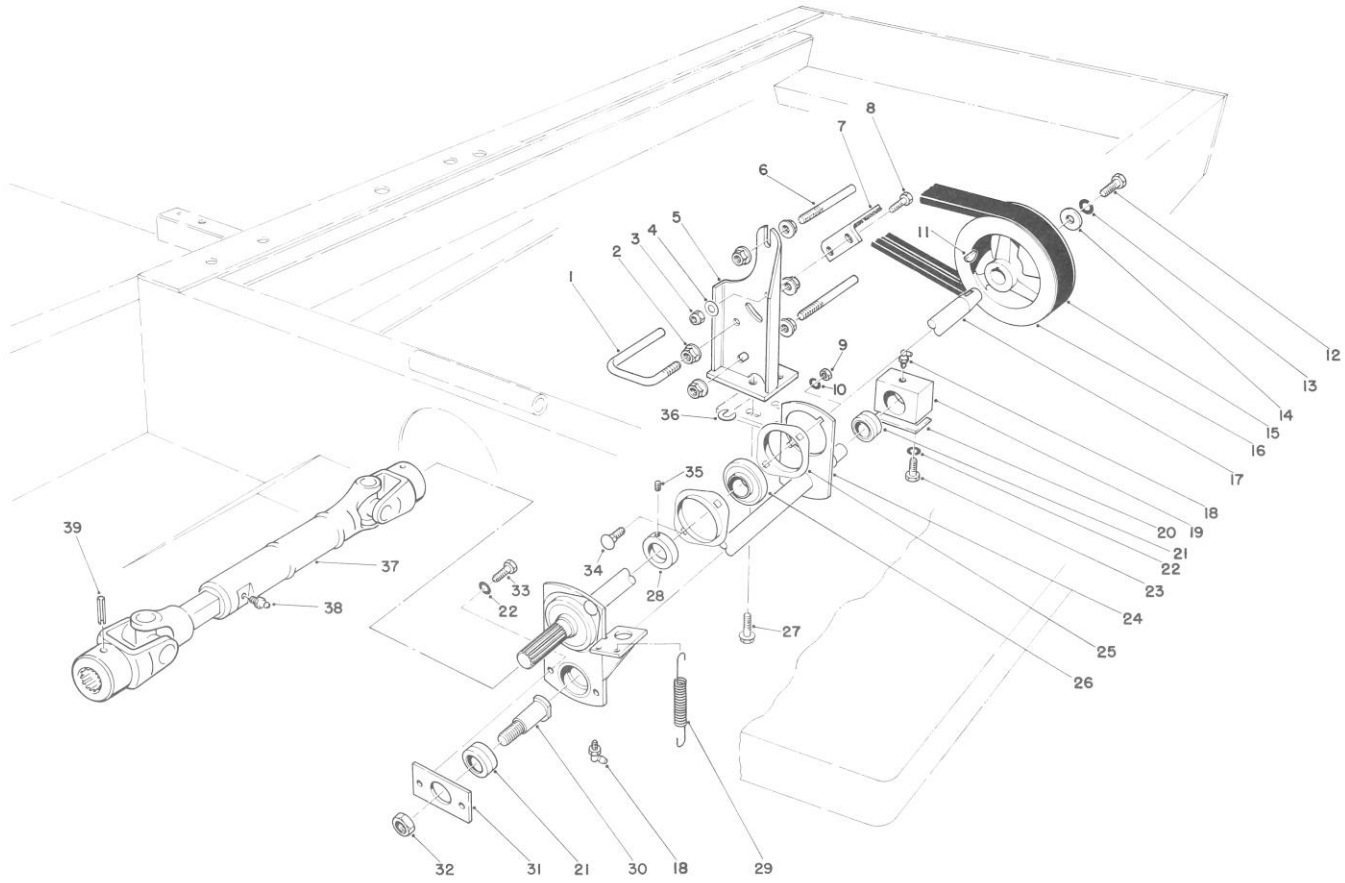

POWER TAKE OFF ASSEMBLY

Ref. No.	Part No.	Description	No. Used
1	44-9220	Guide — Belt, Power Take Off (Lower)	1
2	3290-357	Nut — Hex Hd. w/Locking Flange	6
3	3296-29	Nut — Lock, Nylon Insert	2
4	3256-23	Washer	2
5	44-9310	Bracket—Power Take Off Brake	1
6	44-9230	Guide — Belt Power Take Off	2
7	44-9330	Support Pad Assembly — Power Take Off Brake	1
8	322-4	Screw — Cap Hex Hd.	2
9	3217-6	Nut — Hex	4
10	3253-4	Washer — Lock, Spring	4
11	3257-5	Key — Woodruff	1
12	323-18	Screw — Cap, Hex Hd.	1
13	3253-21	Washer — Lock, Spring	1
14	29-4730	Washer — Power Take Off	1
15	44-8990	V-Belt — Torque Team	1
16	43-5320	Pulley — Power Take Off	1
17	27-4980	Shaft — Power Take Off	1
18	302-40	Grease Fitting	2
19	28-9050	Hub — Bearing	1

Ref. No.	Part No.	Description	No. Used
20	47-4760	Shim — P.T.O. Block	1
21	251-268	Bearing	2
22	3253-3	Washer — Lock Spring	4
23	321-7	Screw — Cap, Hex Head	2
24	44-9350	Engagement Arm	1
25	251-255	Flange Bearing	4
26	251-253	Bearing w/Collar (Incl. Ref. #28 & 35)	2
27	3234-11	Screw — Cap, Hex Hd.	3
28	251-77	Locking Collar	2
29	28-8950	Spring — Extrusion	2
30	27-6970	Stud — Bearing	1
31	27-6650	Retainer — Bearing	1
32	3296-33	Nut — Lock Nylon Insert	1
33	321-3	Screw — Cap Hex Hd.	2
34	3230-16	Carriage Bolt	4
35	3245-1	Set Screw	2
36	28-5640	Washer — Special	A/R
37	27-4520	Drive Shaft	1
38	302-5	Fitting Grease	1
39	32121-34	Pin — Roll	2

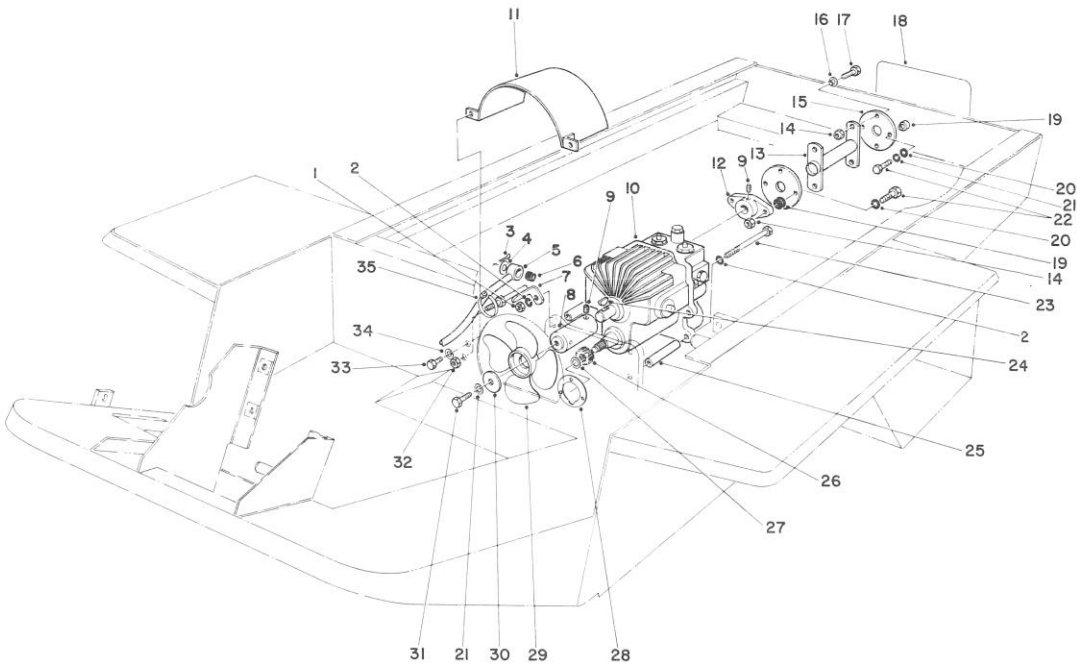

TRANSMISSION AND DRIVE COUPLING ASSEMBLY

Ref. No.	Part No.	Description	No. Used
1	3217-7	Nut Hex	1
2	3253-21	Washer – Lock Spring	3
3	3272-10	Pin Cotter	1
4	3256-26	Washer – Plain, Flat	1
5	27-4160	Pump Control Tube	1
6	23-2270	Bushing – Rubber	1
7	27-5310	Axle Support	1
8	27-4340	Hub & Plug Assembly	1
9	3245-1	Setscrew	4
10	49-7910	Transmission	1
11	27-3270	Fan Shroud	1
12	27-4370	Pump Hub	1
13	44-8720	Drive Shaft	1
14	32152-5	Nut – Lock, Top Deform	6
15	44-2230	Coupling – Rubber	2
16	27-6600	Spacer – Rubber Coupling	4
17	3210-5	Screw – Cap, Hex. Hd.	4
18	43-5120	Decal – Toro	1

Ref. No.	Part No.	Description	No. Used
19	33-2020	Spacer	4
20	3256-3	Washer – Plain, Flat	4
21	3253-4	Washer – Lock, Spring	2
22	3210-8	Screw – Cap, Hex. Hd.	4
23	323-38	Screw – Cap Hex Hd.	2
24	3257-5	Woodruff Key	2
25	27-3680	Mounting Spacer	4
26	23-4810	Spur Gear	1
27	32120-72	Snap Ring	1
28	27-3690	Gasket – Transmission	1
29	27-3740	Fan	1
30	27-4360	Washer	1
31	322-5	Capscrew	1
32	3218-5	Nut – Hex Jam	2
33	321-2	Screw – Cap Hex Hd.	2
34	3253-3	Washer – Lock Spring	2
35	3290-378	Plastic Ty-On	1

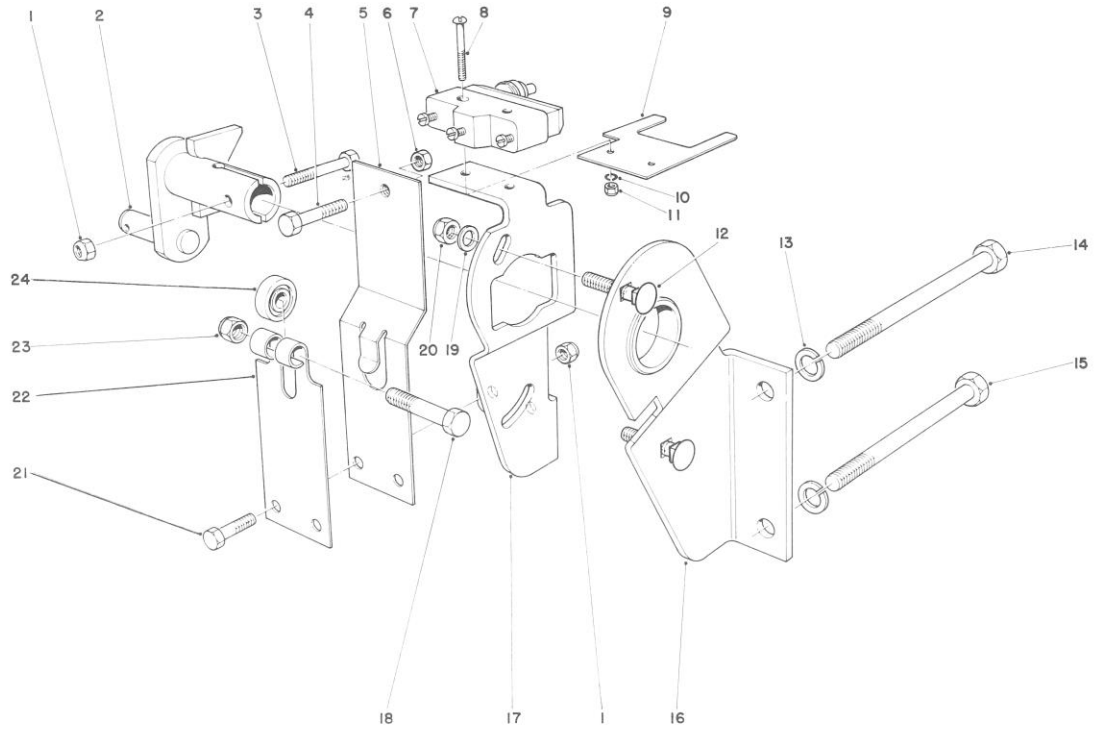

TRANSMISSION INTERLOCK ASSEMBLY

Ref. No.	Part No.	Description	No. Used
1	3296-42	Nut — Lock	4
2	29-9790	Pump Lever	1
3	321-9	Capscrew	2
4	3210-7	Screw — Cap Hex Hd.	1
5	29-6170	Extended Leaf Spring	1
6	3219-2	Nut Hex	1
7	29-6161	Micro Switch	1
8	3249-11	Screw — Machine, Round Head	2
9	46-8810	Stop — Leaf Spring	1
10	3254-9	Washer — Lock Internal Tooth	2
11	3217-16	Nut — Hex	2
12	3230-2	Carriage — Bolt	2

Ref. No.	Part No.	Description	No. Used
13	3253-21	Washer — Lock	2
14	27-9620	Capscrew	1
15	323-39	Screw — Cap Hex. Hd.	1
16	52-8890	Mounting Bracket	1
17	52-9070	Pump Plate	1
18	322-17	Screw — Cap Hex. Hd.	1
19	3256-2	Washer	2
20	3296-29	Nut — Lock	2
21	321-4	Screw — Cap Hex. Hd.	2
22	29-6150	Leaf Spring	1
23	3296-29	Nut — Lock	1
24	251-259	Ball Bearing	1

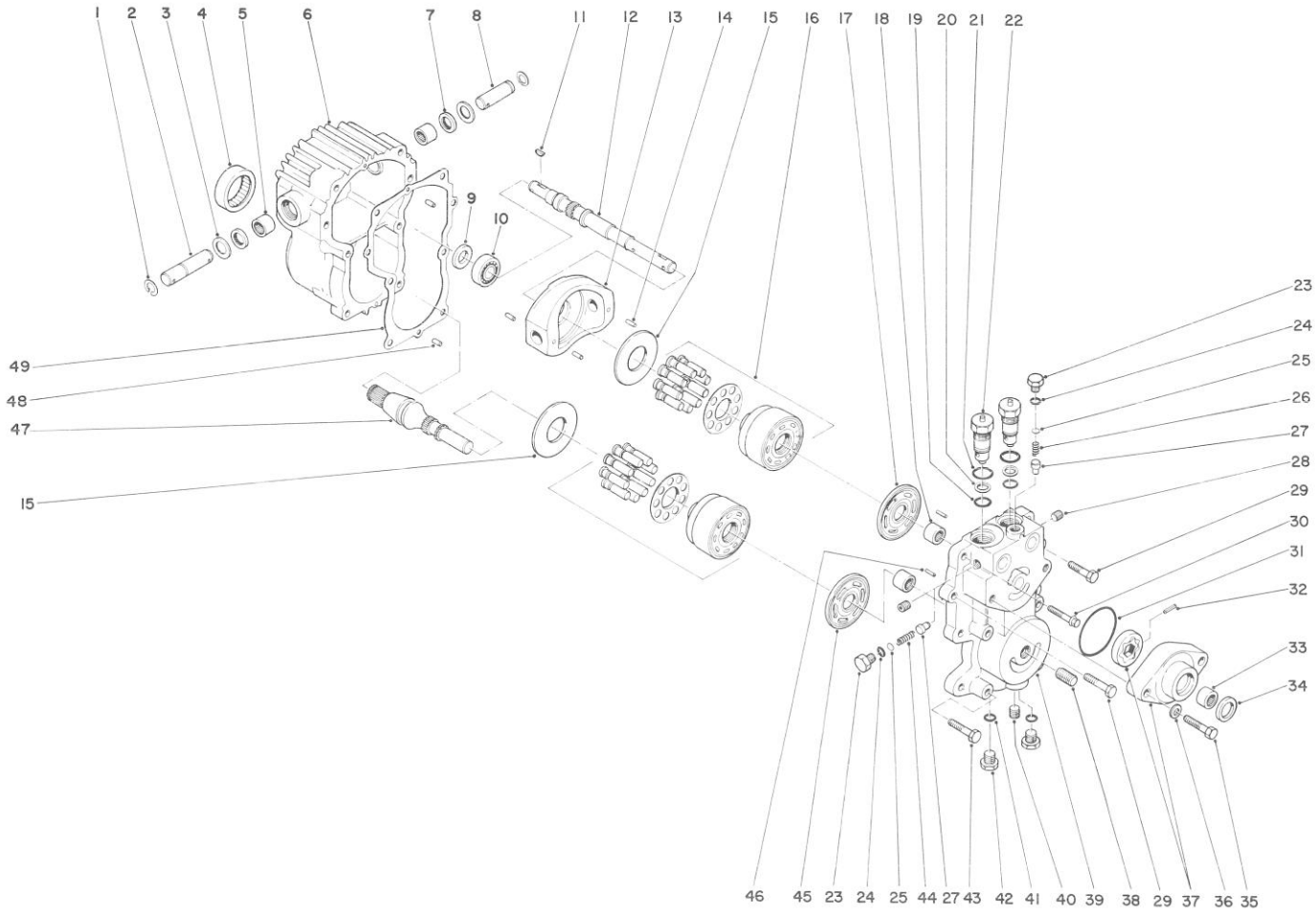

TRANSMISSION ASSEMBLY 49-7910

Ref. No.	Part No.	Description	No. Used
1	32151-46	Retaining Ring	2
2	25-2500	Trunnion Shaft	1
3	25-2510	Washer	2
4	28-3300	Roller Bearing	1
5	28-3310	Needle Bearing	2
6	49-7870	Housing	1
7	25-3210	Lip Seal	2
8	28-3670	Trunnion Shaft	1
9	28-3660	Lip Seal	1
10	28-3650	Ball Bearing	1
11	3257-5	Woodruff Key	2
12	28-3640	Pump Shaft	1
13	49-7820	Variable Swashplate	1
14	32121-91	Pin	3
15	25-2380	Thrust Plate	2
16	48-1800	Cylinder Block Kit	2
17	46-7320	Pump Valve Plate	1
18	25-3300	Needle Bearing	2
19	28-3590	"O" Ring	2
20	28-3580	Back Up Ring	2
21	28-3570	"O" Ring	2
22	49-7830	Check Valve Assembly (Incl. Ref. #19 - 21)	2
23	25-2460	Hex Hd. Plug	2
24	28-3400	"O" Ring	2
25	25-2470	Shim Pack	A/R

Ref. No.	Part No.	Description	No. Used
26	46-7310	Relief Valve Spring Imp.	1
27	28-3420	Relief Valve Cone Chg.	2
28	285-17	Pipe Plug	4
29	323-8	Capscrew	2
30	28-3530	Capscrew	2
31	28-3520	"O" Ring	1
32	38-2680	Pin	1
33	28-3480	Needle Bearing	1
34	28-3470	Lip Seal	1
35	324-23	Hex Hd. Capscrew	2
36	28-3450	Flat Washer	2
37	38-2670	Charge Pump Kit (Incl. Ref. #31 - 34)	1
38	25-2660	Filter Union	1
39	49-7850	Center Section	1
40	46-7280	Plug — Pipe	1
41		"O" Ring	2
42	28-3440	Threaded Plug (Incl. Ref. #41)	2
43	323-10	Capscrew	4
44	25-2480	Relief Valve Spring Chg.	1
45	28-3380	Motor Valve Plate	1
46	25-2430	Pin	2
47	49-8200	Motor Shaft	1
48	28-3350	Pin	2
49	28-3340	Gasket	1

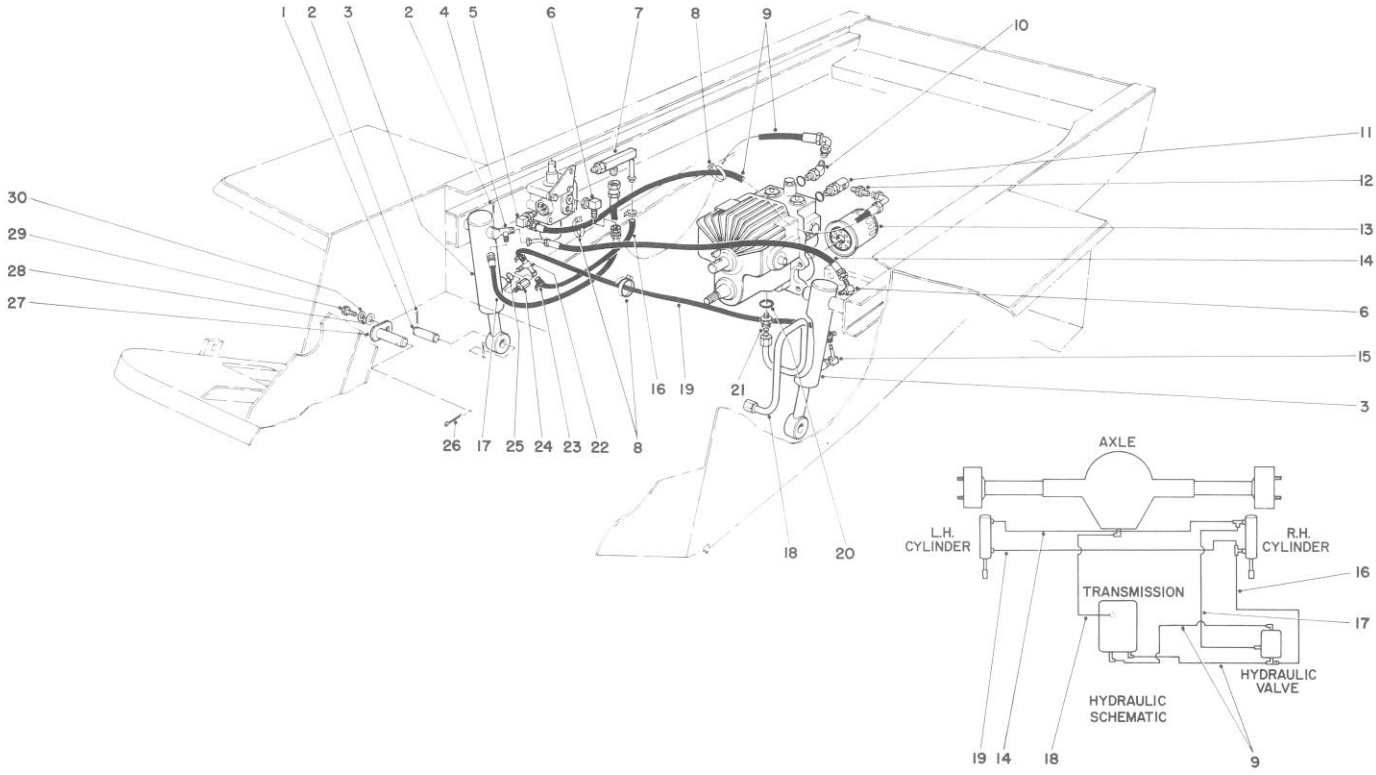

HYDRAULIC VALVE AND LIFT ARM CYLINDERS

Ref. No.	Part No.	Description	No. Used
1	27-4240	Pin – Cylinder	2
2	3272-23	Pin – Cotter	6
3	43-5260	Hydraulic Cylinder	2
4	353-566	Fitting – Adjustment Tee	1
5	353-374	90° Elbow	1
6	353-375	90° Elbow	2
7	38-2550	Fitting Assembly	1
8	3290-378	Plastic Ty – On	3
9	38-2560	Hose – Transmission To Valve	2
10	353-212	Fitting	1
11	36-7960	Fitting Special	1
12	353-678	Adapter	1
13	23-2300	Oil Filter	1
14	27-5010	Hose – Cylinder Connector	1
15	304-99	90° Barb Hose Stem	1

Ref. No.	Part No.	Description	No. Used
16	27-4490	Hose – Low Pressure	1
17	27-5020	Hose – Cylinder Tee To Valve	1
18	27-3760	Hydraulic Tube	1
19	27-4480	Hose – Low Pressure	1
20	237-80	"O" – Ring	1
21	353-385	Fitting (Incl. Ref. #20)	1
22	353-567	Fitting – Male Tee	1
23	2412-36	Clamp – Worm Drive	4
24	353-565	Fitting – Connector	1
25	237-78	"O" Ring	1
26	3272-17	Pin Cotter	2
27	27-4310	Pivot Pin	2
28	3256-22	Washer – Plain Flat	2
29	321-2	Screw – Cap Hex. Hd.	2
30	3253-3	Washer – Lock Spring	2

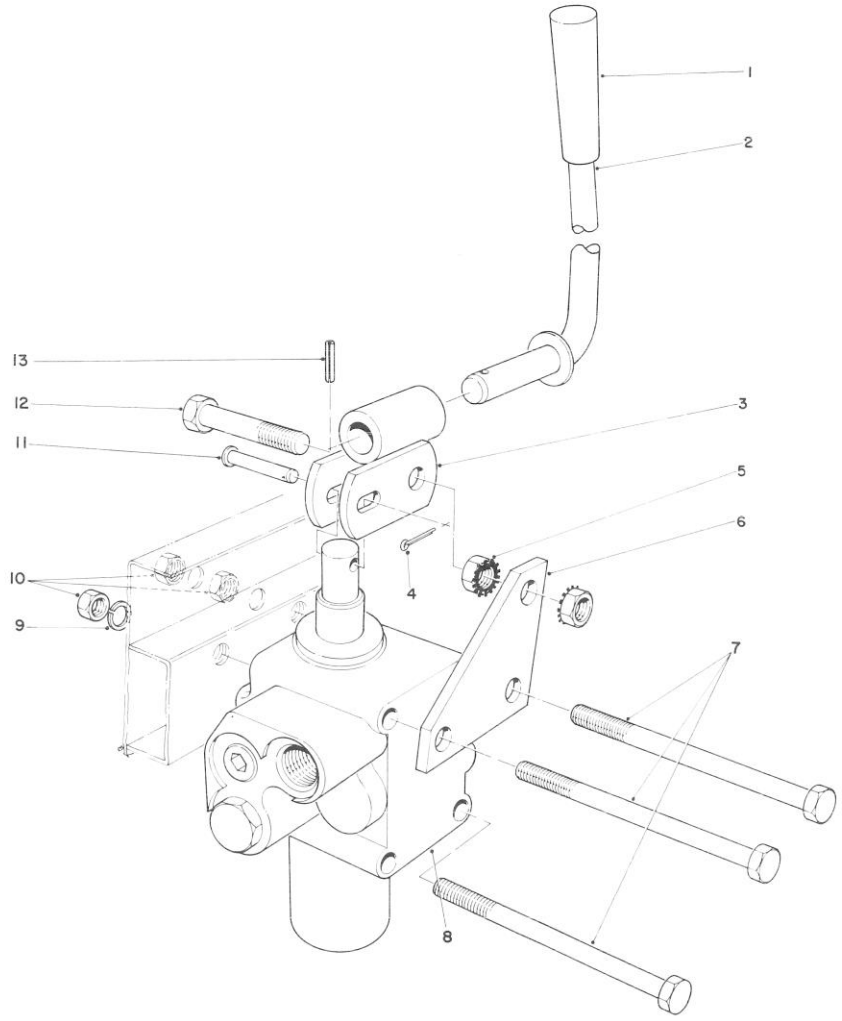

VALVE AND LEVER ASSEMBLY

Ref. No.	Part No.	Description	No. Used
1	233-39	Knob	1
2	27-4200	Valve Lever	1
3	27-4220	Valve Lever Link	1
4	3272-6	Cotter Pin	1
5	32149-2	Nut – Lock	2
6	27-4230	Bracket – Valve	1
7	321-34	Screw – Cap, Hex Hd.	3

Ref. No.	Part No.	Description	No. Used
8	43-1700	Valve Hydraulic	1
9	3253-3	Lockwasher	2
10	3217-5	Nut – Hex	4
11	283-17	Clevis Pin	1
12	321-10	Screw – Cap, Hex Hd.	1
13	32121-73	Roll Pin	1

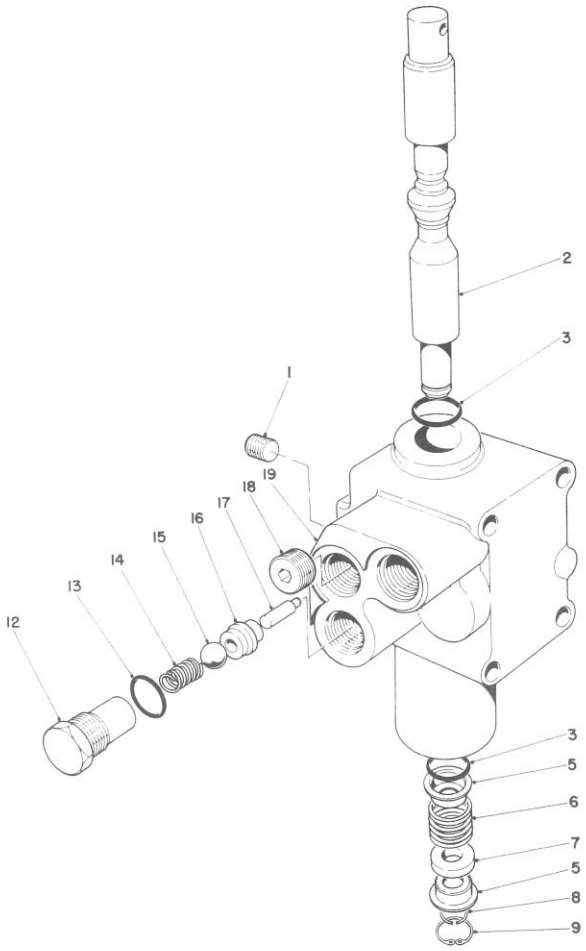

VALVE ASSEMBLY NO. 43-1700

Ref. No.	Part No.	Description	No. Used
1	28-1120	Plug	1
2	27-5210	Spool	1
3	22-8500	O-Ring	2
5	22-8380	Retainer – Spring	2
6	22-8410	Spring	1
7	27-5200	Float Spacer	1
8	22-8480	Snap Ring – Spool	1
9	22-8490	Snap Ring	1

Ref. No.	Part No.	Description	No. Used
12	22-8330	Plug	1
13	237-42	O-Ring	1
14	22-8340	Spring	1
15	22-8350	Ball	1
16	22-8370	Seat – Check Valve	1
17	22-8360	Pin Cam	1
18	28-1130	Plug	1
19		Body	1

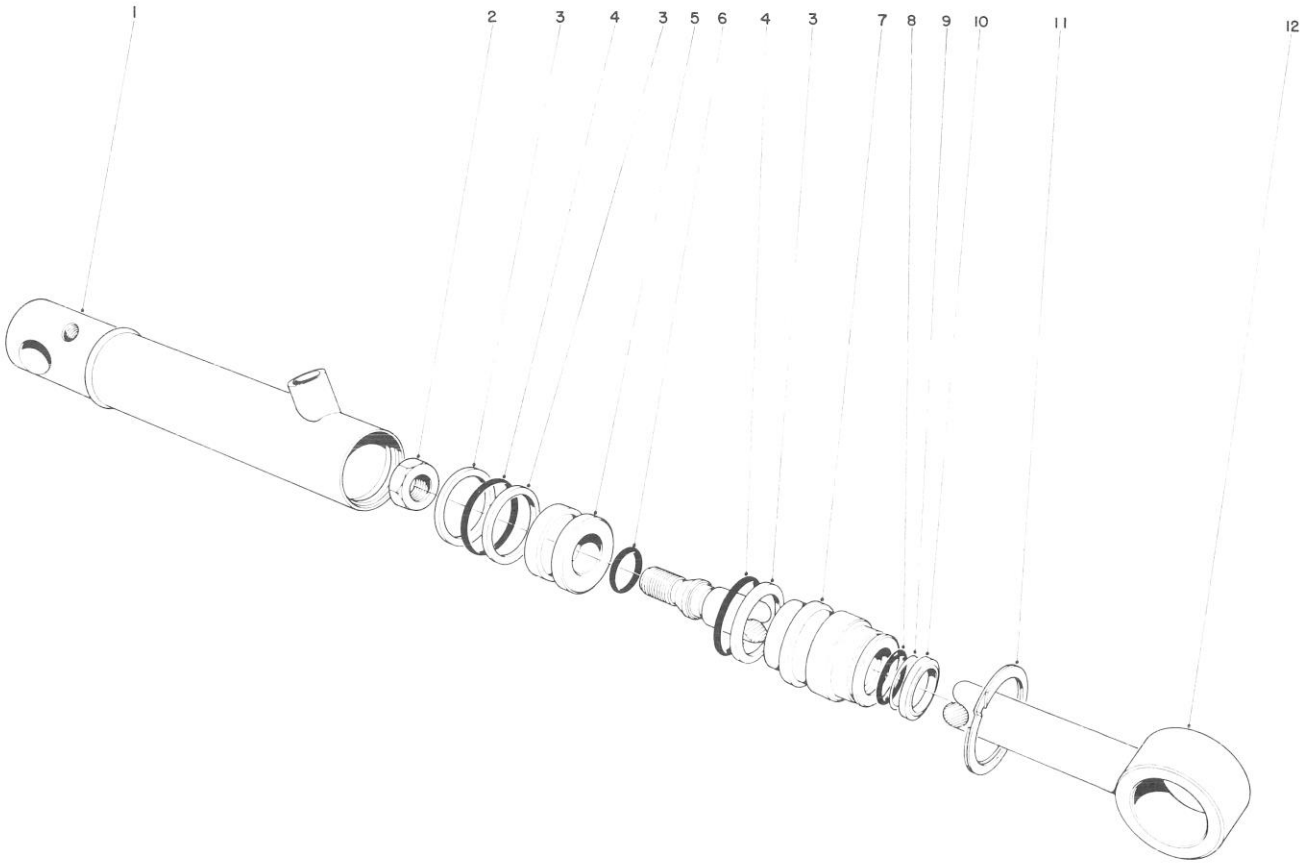

HYDRAULIC CYLINDER NO. 43-5260

Ref. No.	Part No.	Description	No. Used
1		Tube Assembly	1
2	43-5130	Jam Nut	1
3		Back Up Washer	3
4		O-Ring Piston	2
5	43-5150	Piston	1
6		O-Ring	1
7	43-5140	Head	1

Ref. No.	Part No.	Description	No. Used
8		O-Ring	1
9		Leather	1
10		Dust Seal	1
11	43-5220	Ring Retaining	1
12	43-5230	Shaft w/Clevis	1
*	43-5250	Seal Repair Kit (Incl. Ref. # 3, 4, 6, 8, 9 & 10)	1

*Not Illustrated

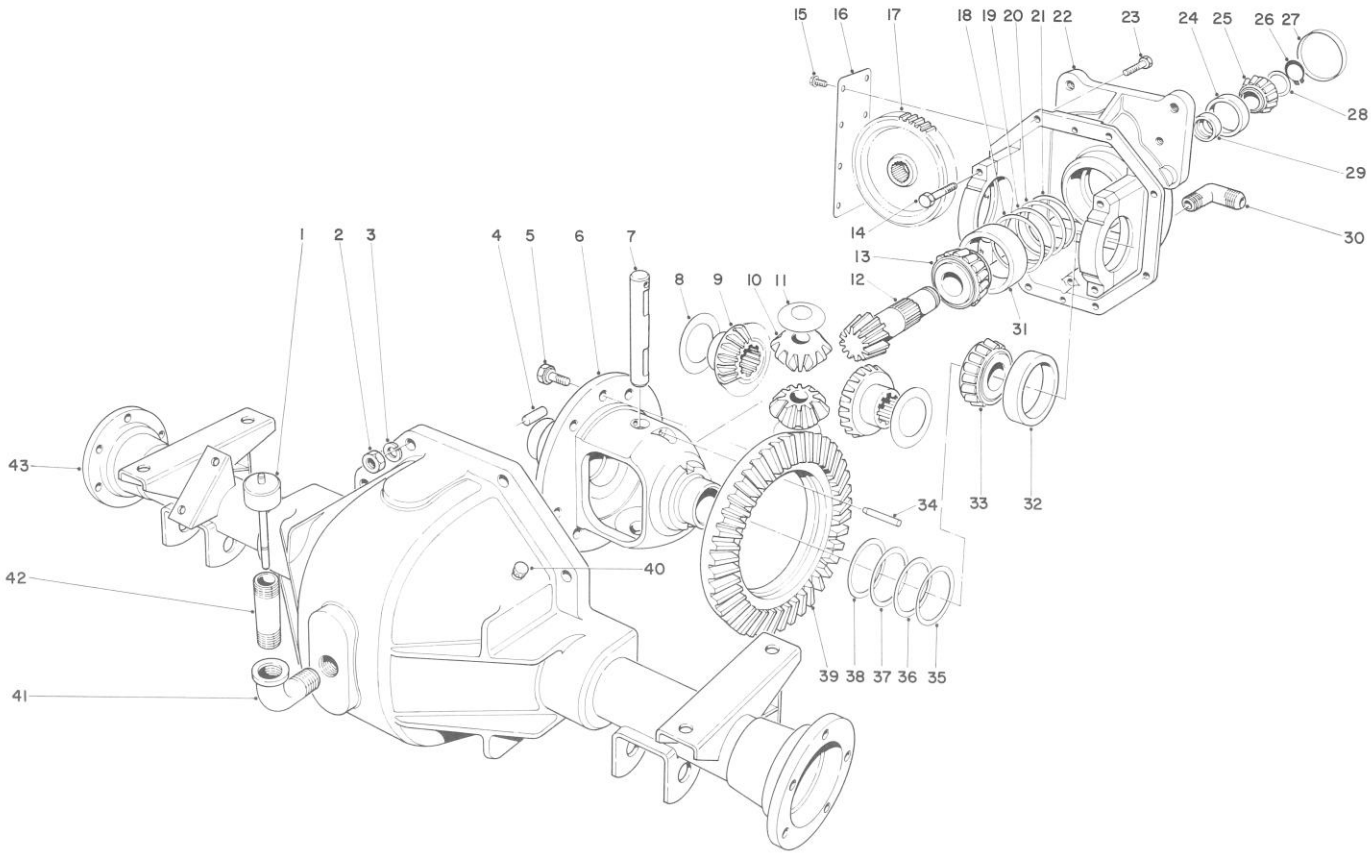

DIFFERENTIAL ASSEMBLY

Ref. No.	Part No.	Description	No. Used
1	27-3710	Dipstick	1
2	3219-2	Nut	8
3	3255-8	Lockwasher	8
4	21-8270	Dowel Pin	2
5	21-7770	Drive Gear Screw	5
6	21-7670	Differential Case	1
7	21-7700	Pinion Mate Shaft	1
8	21-7720	Thrust Washer	2
9	24-8790	Differential Bevel Side Gear	2
10	21-7690	Pinion Gear	2
11	21-7730	Thrust Washer	2
12		Drive Pinion (Incl. Ref. #39)	1
13	43-6760	Tapered Roller Bearing Cone	1
14	324-23	Capscrew	4
15	12-5450	Thread Forming Screw	8
16	21-7830	Gear Cover	1
17	21-8150	Spur Gear	1
18	43-6710	Shim Adjusting Differential Bearing .003	A/R
19	43-6711	Shim Adjusting Differential Bearing .005	A/R
20	43-6712	Shim Adjusting Differential Bearing .010	A/R
21	43-6713	Shim Adjusting Differential Bearing .030	A/R
22	43-6860	Upper Housing Assembly (Incl. Ref. #14)	1
23	3210-7	Capscrew	8

Ref. No.	Part No.	Description	No. Used
24	254-90	Bearing Cup	1
25	254-91	Bearing Cone	1
26	43-6550	Retaining Ring	1
27	21-7850	Cap Plug	1
28	46-2210	Shim Front Pinion Bearing (.031)	A/R
*	46-2211	Shim Front Pinion Bearing (.033)	A/R
*	46-2212	Shim Front Pinion Bearing (.035)	A/R
*	46-2213	Shim Front Pinion Bearing (.037)	A/R
*	46-2214	Shim Front Pinion Bearing (.039)	A/R
*	46-2215	Shim Front Pinion Bearing (.041)	A/R
*	46-2216	Shim Front Pinion Bearing (.043)	A/R
*	46-2220	Shim Front Pinion Bearing (.045)	A/R
*	46-2221	Shim Front Pinion Bearing (.047)	A/R
*	46-2222	Shim Front Pinion Bearing (.049)	A/R
*	46-2223	Shim Front Pinion Bearing (.051)	A/R
*	46-2224	Shim Front Pinion Bearing (.053)	A/R

*Not Illustrated

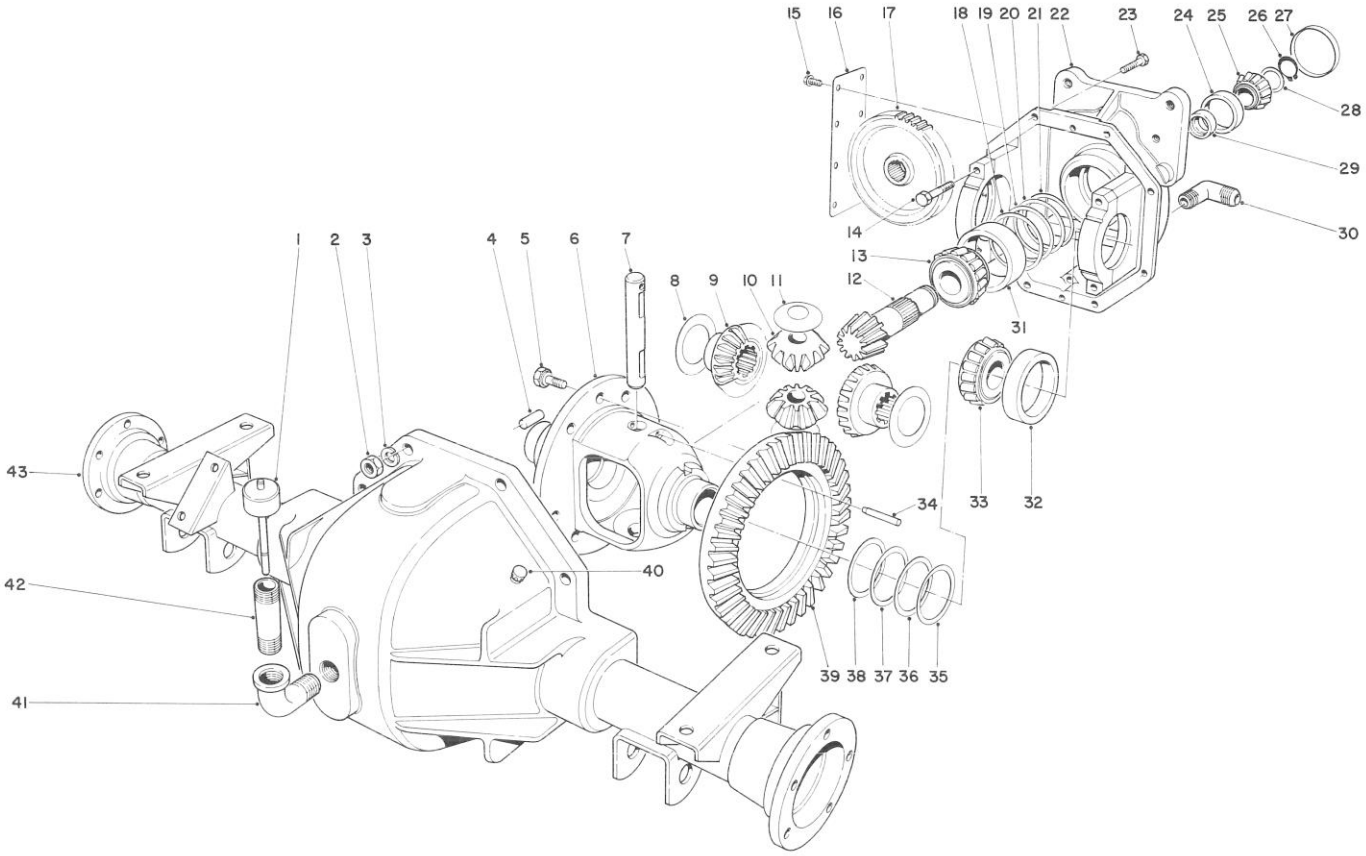

DIFFERENTIAL ASSEMBLY (Continued)

Ref. No.	Part No.	Description	No. Used
*	46-2225	Shim Front Pinion Bearing (.055)	A/R
*	46-2226	Shim Front Pinion Bearing (.057)	A/R
29	21-8020	Front Pinion Bearing Spacer	1
30	353-533	Fitting 90° Elbow	1
31	43-6750	Tapered Roller Bearing Cup	1
32	254-66	Cup – Tapered Bearing	2
33	254-65	Cone – Tapered Bearing	2
34	32121-15	Roll Pin	1
35	21-8090	Differential Adjust. Shim. .003	A/R
36	21-8100	Differential Adjust. Shim. .005	A/R
37	21-8110	Differential Adjust. Shim. .010	A/R
38	21-8120	Differential Adjust. Shim. .030	A/R
39		Ring Gear	1
40	46-3330	Vent Tube Assembly	1
41	2811-9	Street Elbow 90°	1
42	289-38	Pipe Nipple	1
43	43-6850	Lower Housing Assembly	1
*	43-6510	Gear & Pinion Assembly (Incl. Ref. # 12 & 39)	1

*Not Illustrated

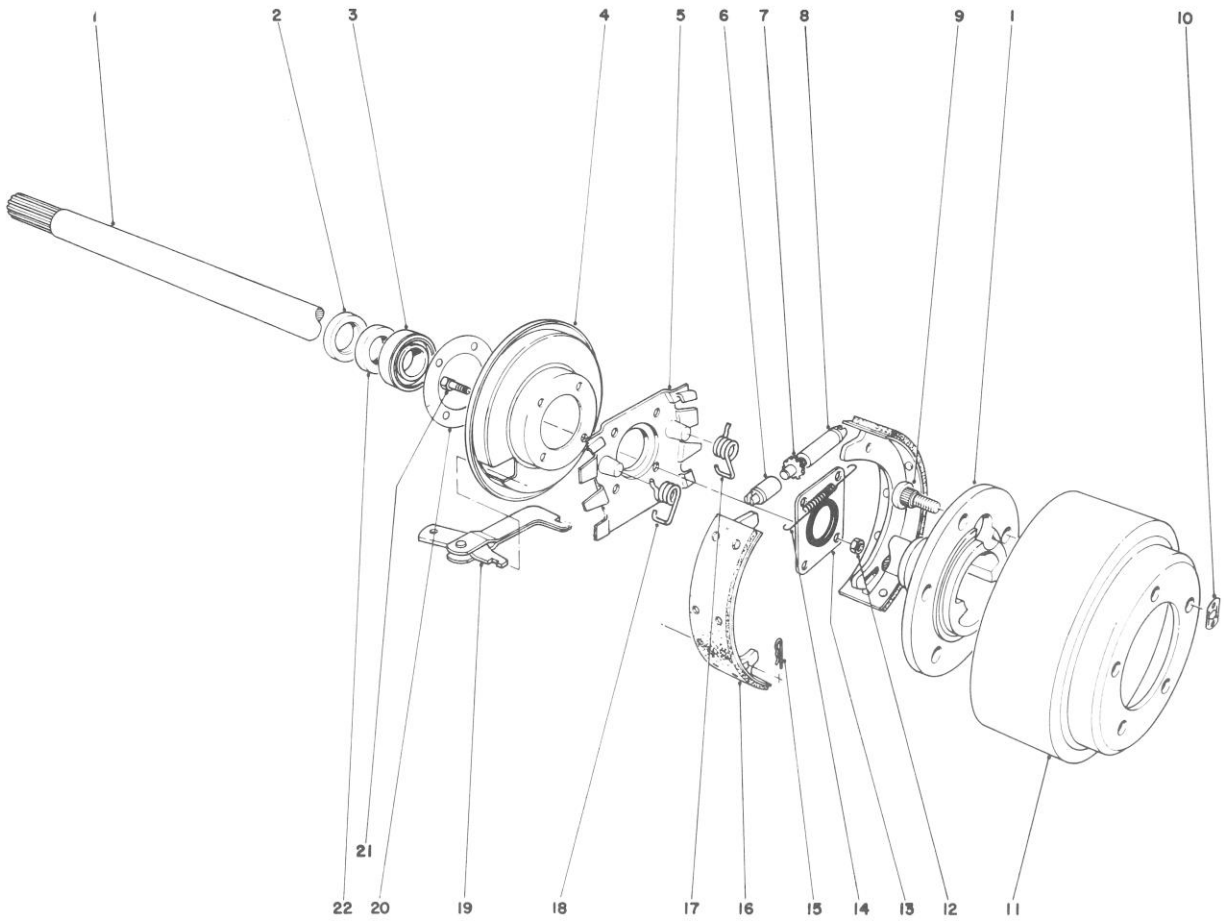

BRAKE ASSEMBLY

Ref. No.	Part No.	Description	No. Used
1	27-6860	Axle Shaft Flanged L.H.	1
*	27-6850	Axle Shaft Flanged R.H.	1
2	21-8330	Oil Seal	2
3	21-8180	Bearing – Tapered Roller	2
4	21-9450	Dust Shield	2
5	40-2190	Torque Spider	2
6	21-9390	Socket – Adjusting Screw	2
7	21-9370	Adjusting Screw	2
8	21-9380	Pivot Nut	2
9	242-34	Axle Flange Stud	10
10	21-8360	Clip Retaining	2
11	28-0680	Brake Drum	2

Ref. No.	Part No.	Description	No. Used
12	43-6800	Locknut – Flange Hd.	8
13	28-0670	Oil Seal	2
14	21-9440	Spring – Adjusting Screw	2
15	21-9460	Retainer – Parking Brake Lever	4
16	43-2690	Shoe & Lining Ass'y.	4
17	21-9420	Spring – Shoe Return L.H.	2
18	21-9430	Spring – Shoe Return R.H.	2
19	27-6880	Strut & Lever Parking Brake	2
20	21-8320	Gasket Wheel Bearing	2
21	28-0660	Capscrew	8
22	24-8840	Ring Wheel Bearing	2

*Not Illustrated

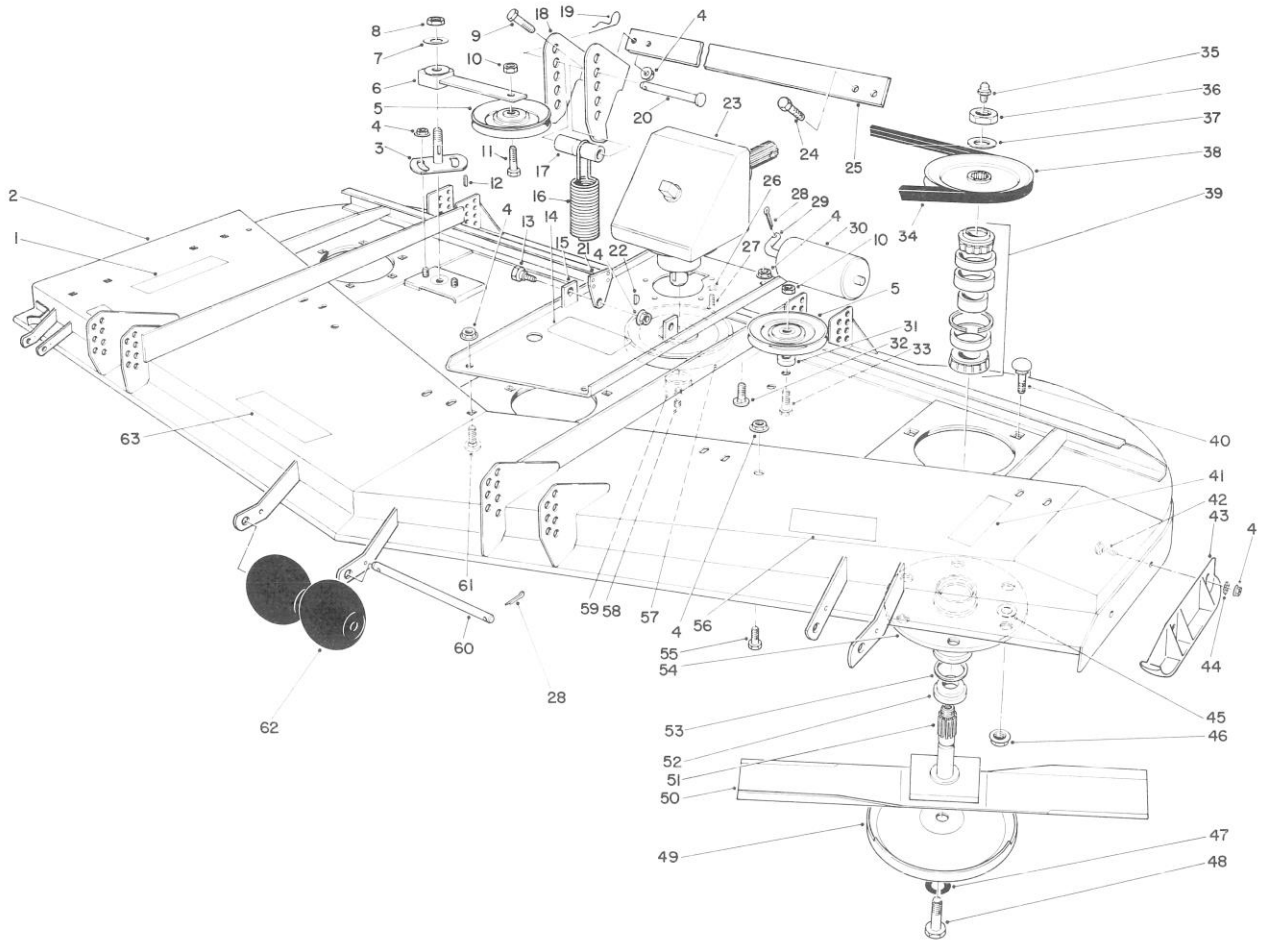

CUTTING UNIT MODEL NO. 30562

Ref. No.	Part No.	Description	No. Used
1	26-7980	Decal — Caution	1
2	52-5780	Cutting Deck	1
3	44-6300	Plate — Idler	1
4	3290-357	Locknut	17
5	52-4580	Pulley — Idler	2
6	27-8580	Idler Socket & Bush Assy.	1
7	3256-27	Washer	1
8	3296-33	Locknut	1
9	323-11	Hex. Hd. Capscrew	3
10	3296-5	Locknut	2
11	3211-8	Hex. Hd. Capscrew	1
12	5-1077	Key — Square	1
13	46-3380	Bolt — Shoulder	2
14	44-6470	Decal — Caution	1
15	47-5530	Base — Gear Box	1
16	46-3200	Spring — Extension	2
17	40-0300	Spacer	2
18	46-2620	Bracket — Spring	2
19	3290-355	Hairpin Cotter	2
20	283-55	Pin — Clevis	2
21	46-3190	End — Spring	2
22	3257-5	Key — Woodruff	1
23	8-0909	Gear Box	1

Ref. No.	Part No.	Description	No. Used
24	323-6	Hex. Hd. Capscrew	2
25	47-5450	Mount — Bracket	1
26	3253-21	Lockwasher	5
27	3274-1	Socket Hd. Capscrew	5
28	3272-11	Cotter Pin	4
29	40-0340	Shaft — Rear Roller	2
30	36-1740	Roller — Deck	2
31	44-6390	Spacer	1
32	3231-27	Carriage Bolt	2
33	3211-9	Hex. Hd. Capscrew	1
34	44-6260	V-Belt	1
35	302-2	Grease Fitting	3
36	32146-20	Locknut	3
37	7-4150	Washer	3
38	44-6340	Pulley — Hub Spindle	3
39	46-8530	Bearing Assembly	3
40	3231-22	Carriage Bolt	20
41	26-7970	Decal — Caution (Rotating Blades)	1
42	3231-22	Carriage Bolt	2
43	57-0570	Skid — L.H.	1
44	3290-224	Washer — Pyramidal	2
45	3256-24	Washer	A/R

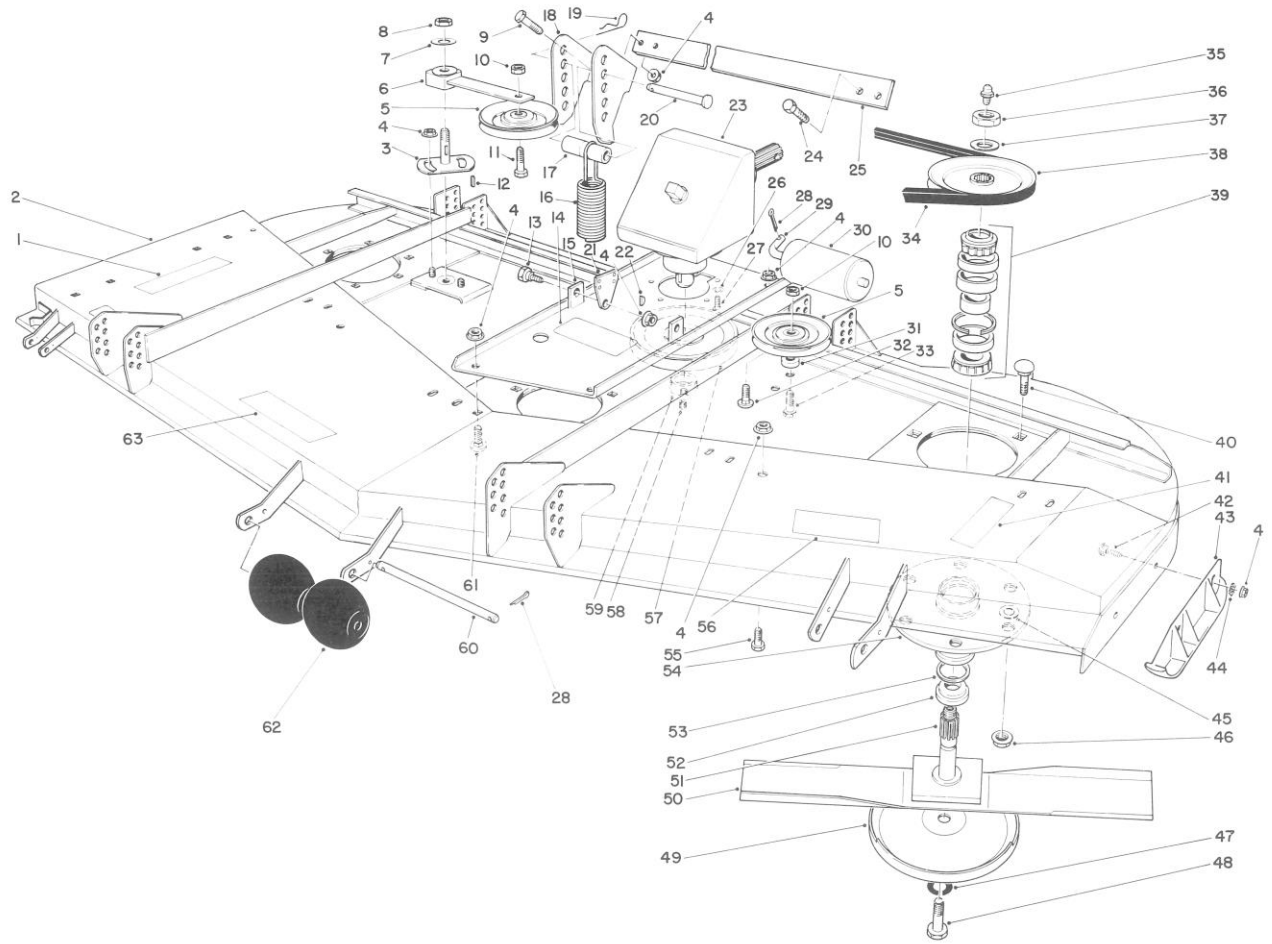

CUTTING UNIT MODEL NO. 30562 (Continued)

Ref. No.	Part No.	Description	No. Used
46	32128-21	Flange Locknut	18
47	3253-27	Lockwasher	3
48	44-2200	Capscrew — Blade	3
49	27-1000	Cup — Anti-Scalp	3
50	44-6250	Blade	3
51	27-0920	Shaft — Spindle	3
52	27-0950	Spacer — Spindle Bearing	3
53	253-139	Seal — Wave	6
54	61-4160	Housing — Spindle	3

Ref. No.	Part No.	Description	No. Used
55	323-4	Hex. Hd. Capscrew	2
56	52-1430	Decal — Rear Weight	1
57	27-6110	Pulley — Gear Box	1
58	3245-9	Socket Hd. Set Screw	2
59	27-6140	Bushing — Taper Lock	1
60	40-6400	Shaft — Roller	1
61	3231-21	Carriage Bolt	2
62	29-4820	Roller — Front	2
63	26-7960	Decal — Caution	1

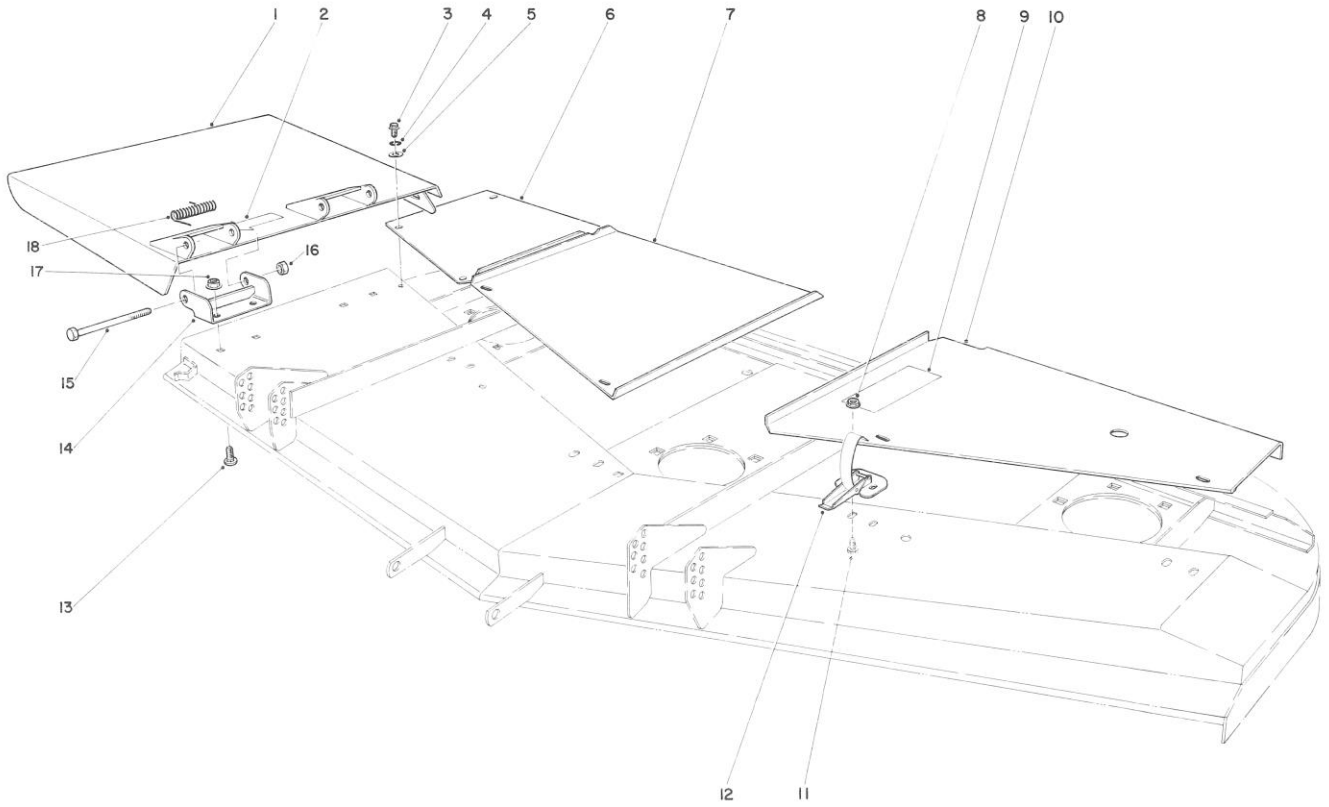

CUTTING UNIT MODEL NO. 30562 (Continued)

Ref. No.	Part No.	Description	No. Used
1	52-5790	Deflector	1
2	26-7120	Decal – Blade Line	1
3	32104-114	Screw Self Tapping Hex. Hd.	4
4	3253-3	Washer – Lock	4
5	3256-22	Washer	4
6	44-6280	Cover – Deck R.H.	1
7	44-6270	Cover – Deck Center	1
8	32128-17	Nut – Lock, Flange	8
9	42-6860	Decal – Height of Cut	1

Ref. No.	Part No.	Description	No. Used
10	44-6290	Cover – Deck L.H.	1
11	3290-321	Screw – Machine Hex Slotted	8
12	249-21	Latch Draw	4
13	3231-27	Bolt – Carriage	4
14	51-1530	Hinge Bracket	2
15	325-17	Screw – Cap Hex. Hd.	2
16	32153-5	Nut – Lock	2
17	3290-357	Nut – Lock	4
18	51-1550	Spring	2

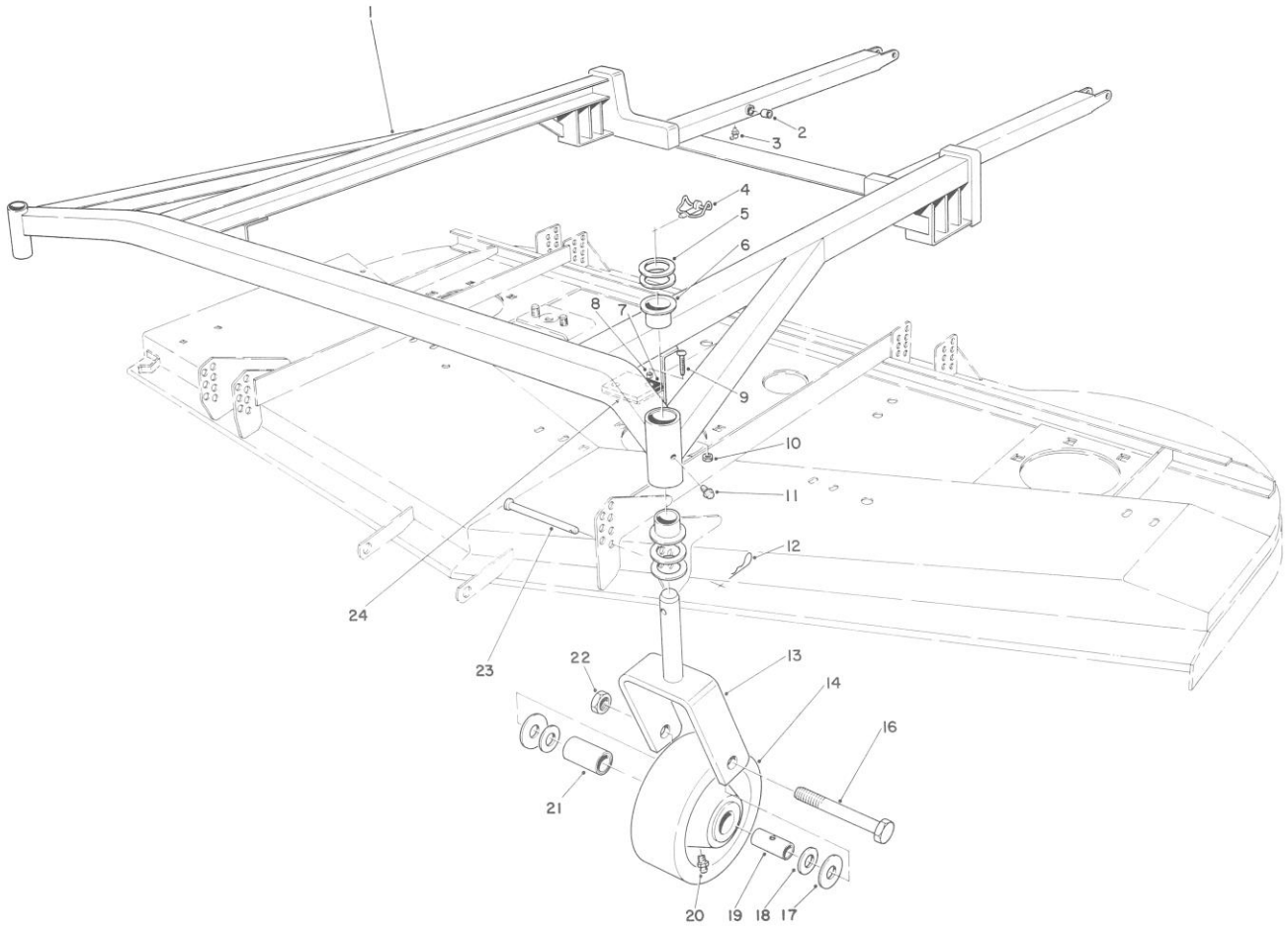

CUTTING UNIT MODEL NO. 30562 (Continued)

Ref. No.	Part No.	Description	No. Used
1	44-6410	Frame (Incl. Ref. #2, 3 & 6)	1
2	256-101	Bushing	4
3	302-40	Grease Fitting	2
4	3290-384	Lynch Pin	2
5	3-6781	Washer — Thrust	8
6	28-9290	Bushing Special	4
7	40-0330	Cushion — Rubber	2
8	40-9520	Spacer — Split	4
9	32122-28	Screw — Machine Truss Hd.	4
10	3296-2	Nut — Lock	4
11	302-5	Grease Fitting	2
12	3290-355	Pin — Hair	4

Ref. No.	Part No.	Description	No. Used
13	40-0370	Front Castor Fork	2
14	27-1050	Castor Wheel (Incl. Ref. #17-21)	2
16	328-9	Screw Cap Hex. Hd.	2
17	27-1170	Thrust Washer	4
18	27-1180	Bearing Retainer	4
19	27-1200	Spanner Bushing	2
20	302-55	Fitting — Grease	2
21	27-1210	Roller Bearing	2
22	32153-6	Locknut	2
23	283-55	Pin Clevis	4
24	42-6200	Shim — Cushion	A/R

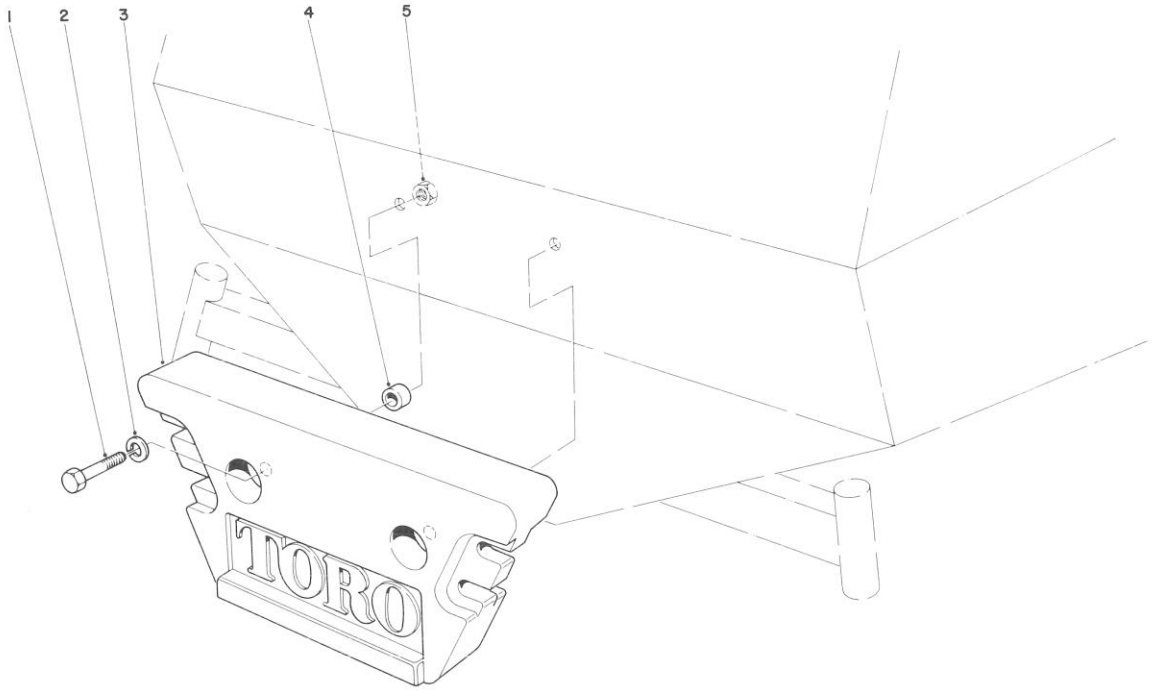

REAR WEIGHT †

Ref. No.	Part No.	Description	No. Used
1†	325-8	Screw – Cap, Hex Hd.	2
2†	3253-7	Washer – Lock, Spring	2
3†	24-5790	Rear Weight	1

Ref. No.	Part No.	Description	No. Used
4†	3-8847	Spacer	2
5†	3217-9	Nut – Hex	2

†Required on Groundsmaster 220 with 62" cutting unit. Parts must be ordered separately.

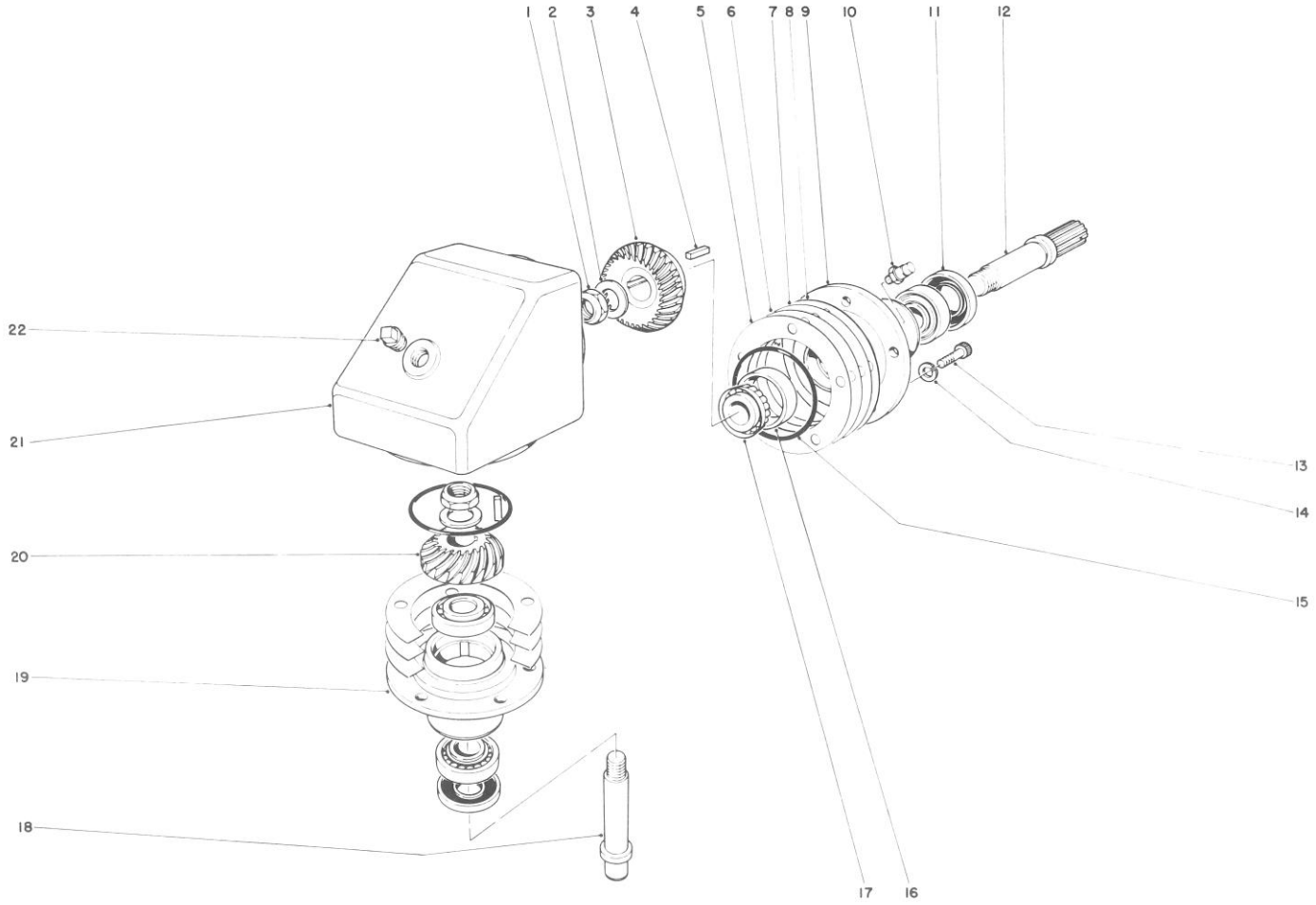

CUTTING UNIT MODEL NO. 30562, 30555, 30568 & 30575

Ref. No.	Part No.	Description	No. Used
1	3296-15	Nut	2
2	3-6514	Thrust Washer	2
3	26-1340	Gear – Spiral Bevel	1
4	18-6430	Square Key	2
5	26-1350	Shim .002 Thick Red	A/R
6	26-1360	Shim .005 Thick Blue	A/R
7	26-1370	Shim .015 Thick Pink	A/R
8	33-2040	Shim .020 Thick Yellow	A/R
9	26-1290	Bearing Housing – Input	1
10	302-14	Vent Plug	1
11	253-137	Oil Seal	2
12	26-1310	Shaft – Input	1

Ref. No.	Part No.	Description	No. Used
13	3274-7	Capscrew Socket Head	5
14	3253-21	Lockwasher	5
15	237-97	O-Ring	2
16	254-90	Bearing Cup	4
17	254-91	Bearing Cone	4
18	26-1320	Shaft – Output	1
19	26-1380	Bearing Housing – Output	1
20	26-1330	Pinion Spiral	1
21	26-1270	Gear Box	1
22	281-11	Pipe Plug Sq. Hd.	1

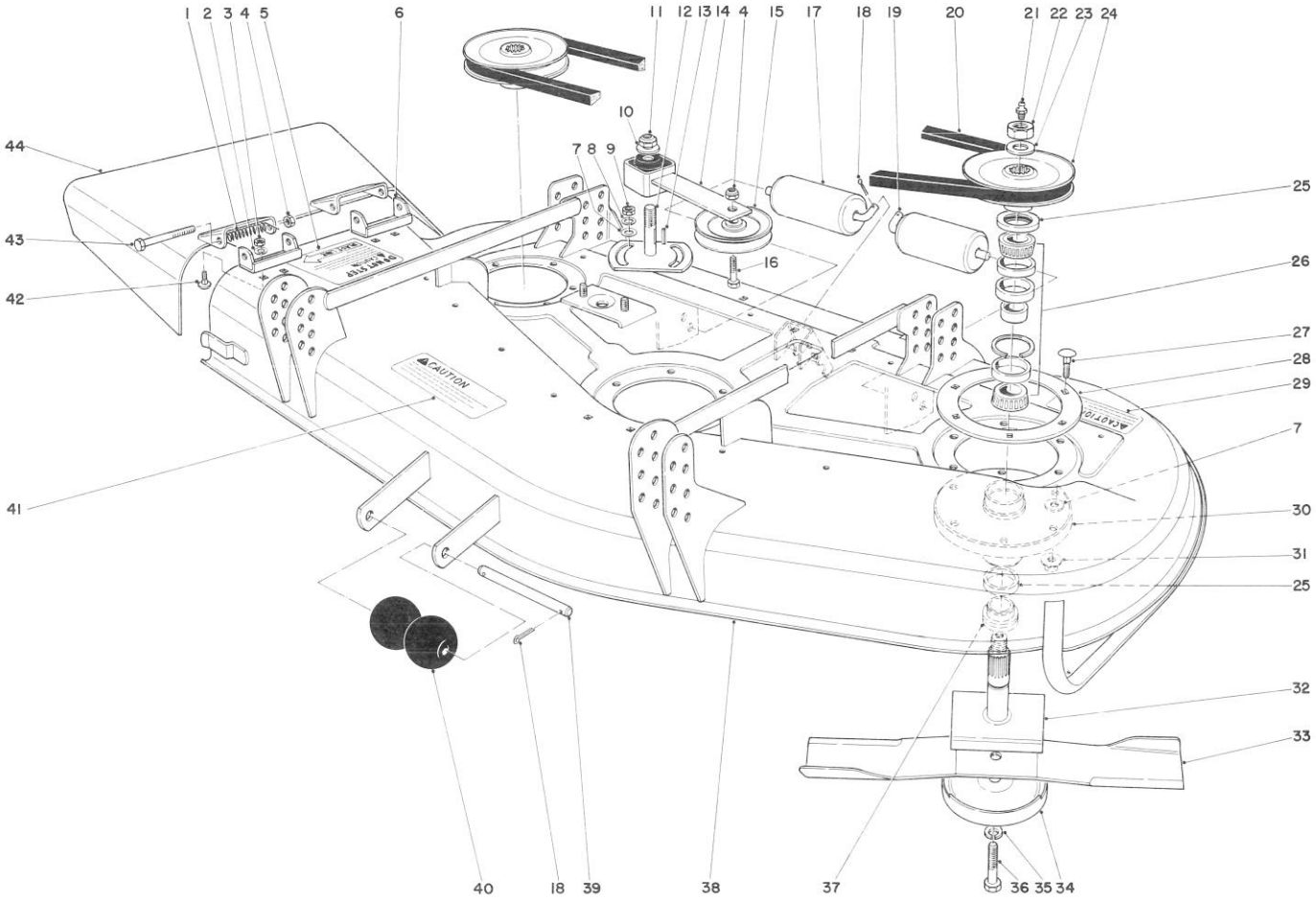

CUTTING UNIT MODEL NO. 30555

Ref. No.	Part No.	Description	No. Used
1	40-6230	Spring – Torsion	2
2	3253-4	Lockwasher	4
3	3217-6	Nut	4
4	3296-5	Locknut	3
5	40-5730	Decal – Caution	1
6	29-5590	Pivot Bracket – Deflector	2
7	3256-24	Washer – Flat	20
8	3253-21	Lockwasher	2
9	3218-3	Nut – Jam	2
10	3256-27	Washer – Flat	1
11	3296-33	Locknut	1
12	28-9060	Plate – Idler	1
13	5-1077	Key Square	1
14	27-8580	Idler Socket	1
15	52-4580	Pulley – Idler	1
16	3211-8	Capscrew	1
17	36-1740	Roller – Deck	2
18	3272-11	Cotter Pin	4
19	40-0340	Shaft – Rear Roller	2
20	27-1160	V-Belt	1
21	302-2	Grease Fitting	3
22	32146-20	Locknut	3
23	7-4150	Washer	3

Ref. No.	Part No.	Description	No. Used
24	27-0970	Pulley	3
25	253-139	Seal – Wave	6
26	46-8530	Bearing Assembly	3
27	3231-22	Carriage Bolt	18
28	27-7680	Ring – Deck Support	3
29	26-7970	Decal – Caution	1
30	61-4160	Spindle Housing	3
31	32128-21	Locknut – Flange	18
32	27-0920	Spindle Shaft	3
33	27-0990	Blade	3
34	27-1000	Anti-Scalp Cup	3
35	3253-27	Lockwasher	3
36	44-2200	Screw – Blade Bolt	3
37	27-0950	Spacer – Spindle Bearing	3
38	40-0020	Cutting Deck	1
39	40-6400	Shaft – Roller	1
40	29-4820	Roller	2
41	26-7960	Decal – Caution	1
42	3230-20	Carriage Bolt	4
43	3211-15	Capscrew	2
44	40-6200	Grass Deflector	1
*	44-5480	Blade – High Sail (Optional)	3

*Not Illustrated

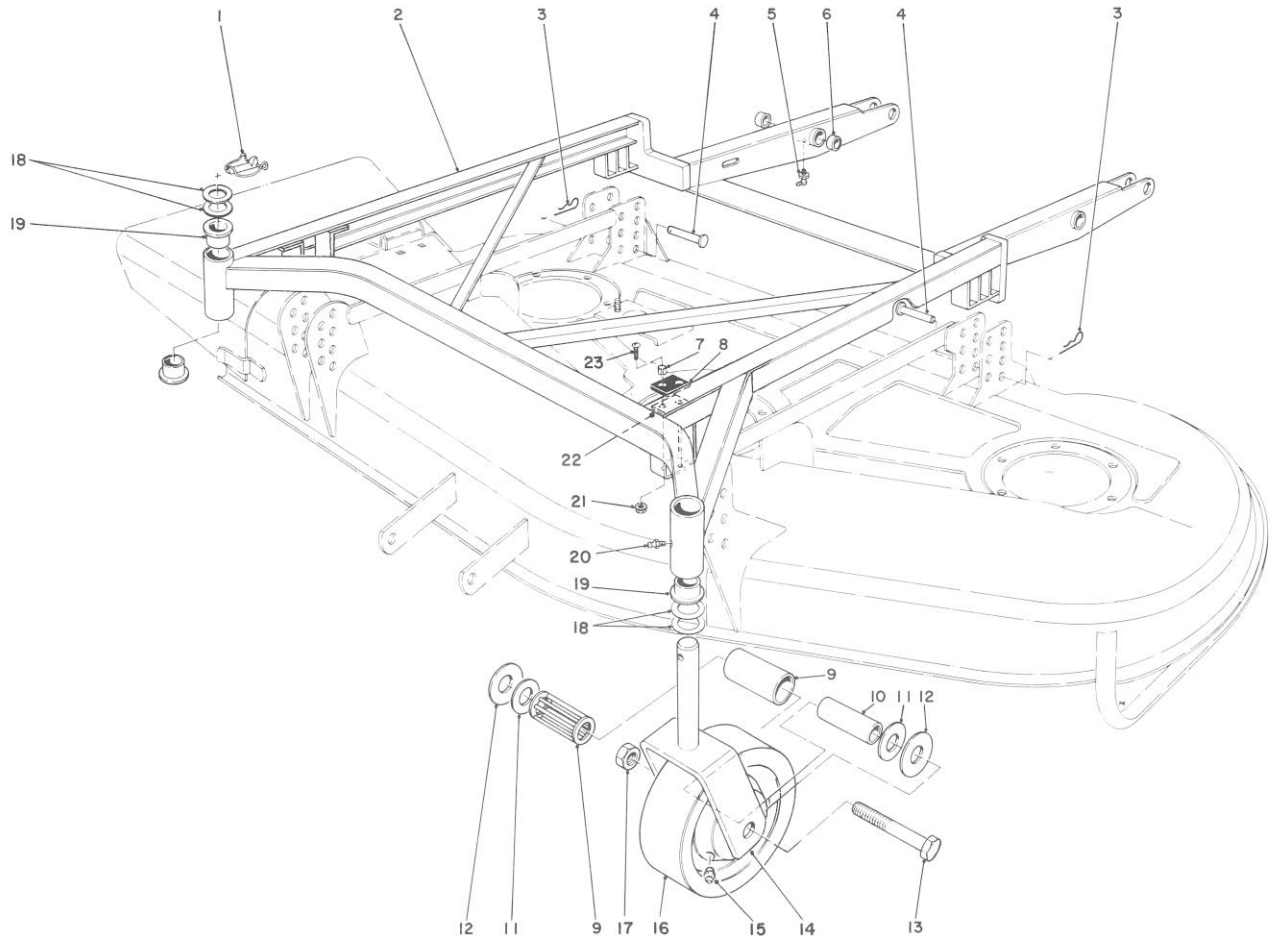

CUTTING UNIT MODEL NO. 30555 (Continued)

Ref. No.	Part No.	Description	No. Used
1	3290-384	Lynch Pin	2
2	44-2170	Frame — Deck Suspension (Incl. Ref. #5-6 & 19)	1
3	3290-355	Pin — Hair	4
4	283-55	Pin Clevis	4
5	302-40	Grease Fitting	2
6	256-101	Bushing	4
7	40-9520	Spacer — Split	4
8	40-0330	Cushion — Rubber	2
9	27-1210	Roller Bearing	2
10	27-1200	Spanner Bushing	2
11	27-1180	Bearing Retainer	4
12	27-1170	Thrust Washer	4

Ref. No.	Part No.	Description	No. Used
13	328-9	Screw — Cap Hex. Hd.	2
14	40-0370	Front Castor Fork	2
15	302-55	Fitting — Grease	2
16	27-1050	Wheel Assy. (Incl. Ref. #9-12 & 15)	2
17	32153-6	Nut — Lock	2
18	3-6781	Washer — Thrust	8
19	28-9290	Bushing — Special	4
20	302-5	Grease — Fitting	2
21	3296-2	Locknut	4
22	42-6200	Shim Cushion	A/R
23	32122-28	Machine Screw Truss Head	4

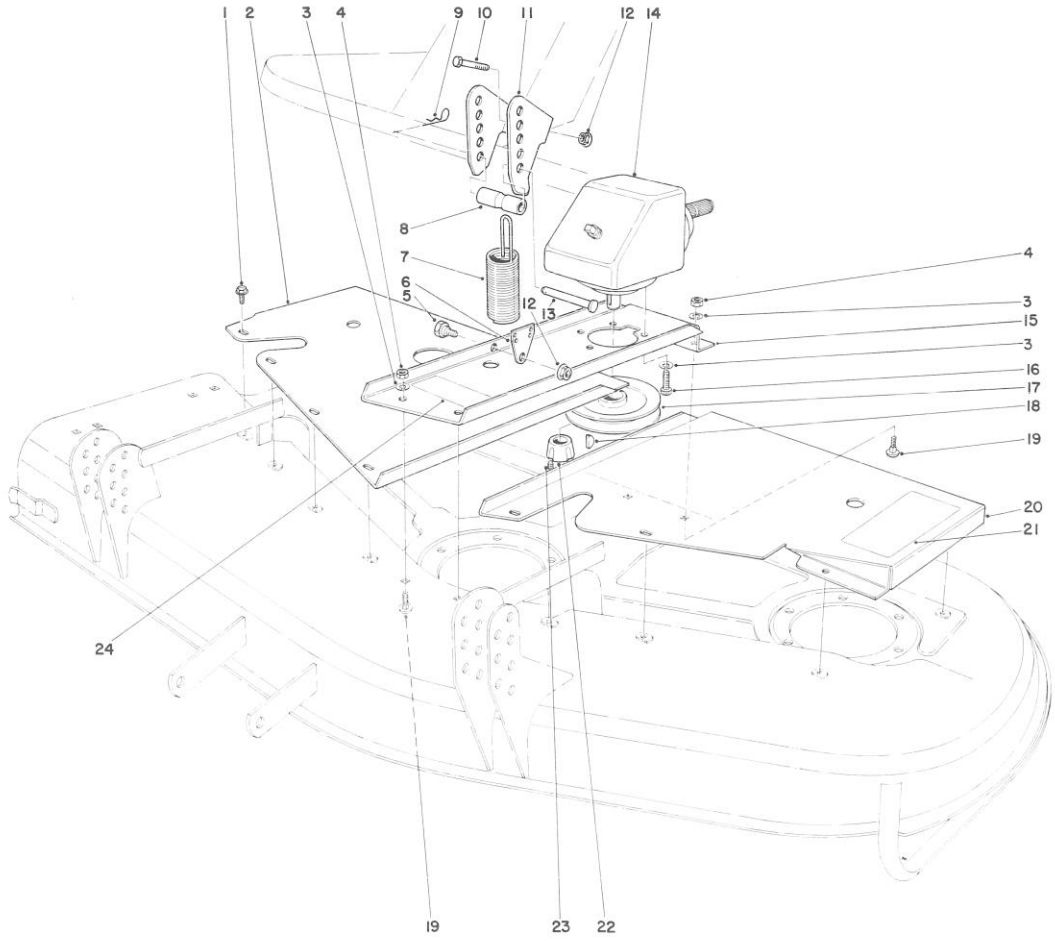

CUTTING UNIT MODEL NO. 30555 (Continued)

Ref. No.	Part No.	Description	No. Used
1	46-8560	Self Tapping Screw Hex Hd. w/Locking Flange	11
2	40-0410	Cover R.H.	1
3	3253-21	Lockwasher	9
4	3217-7	Nut	4
5	46-3380	Bolt — Shoulder	1
6	46-3190	End — Spring	1
7	46-3200	Spring — Extension	1
8	40-0300	Spacer	1
9	3290-355	Hair — Pin	1
10	323-11	Capscrew	2
11	46-2620	Bracket — Spring	1
12	3290-357	Nut — Lock Flange	3

Ref. No.	Part No.	Description	No. Used
13	283-55	Pin — Clevis	1
14	8-0909	Gear Box Assembly	1
15	40-0360	Base — Gear Box	1
16	3274-1	Capscrew — Socket Hd.	5
17	27-6110	Pulley — Gear Box	1
18	3257-5	Key Woodruff	1
19	3231-21	Carriage Bolt	4
20	40-0390	Cover L.H.	1
21	42-6860	Decal — Height of Cut	1
22	27-6140	Bushing — Taper Lock	1
23	3245-9	Set Screw — Socket Hd.	1
24	44-6470	Decal — Caution	1

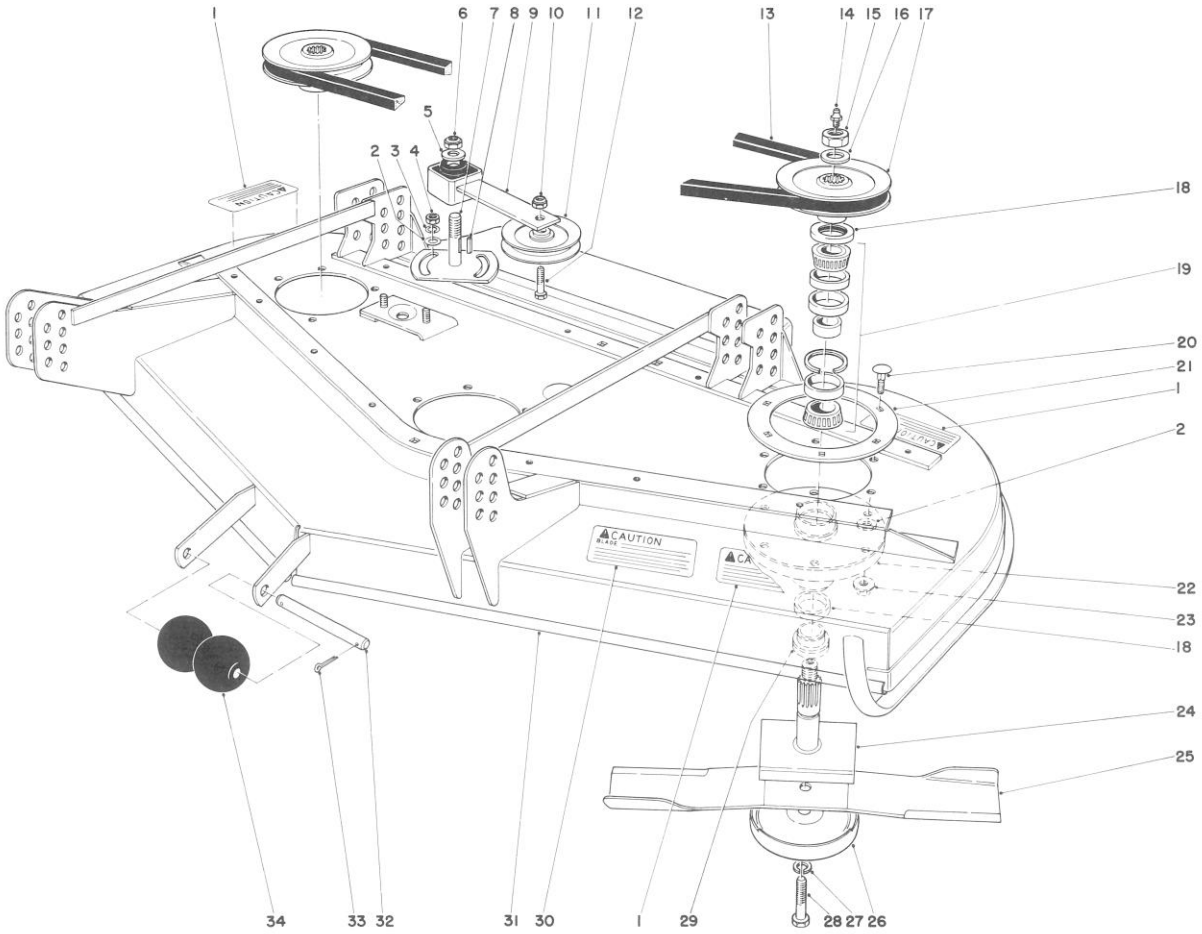

CUTTING UNIT MODEL NO. 30568

Ref. No.	Part No.	Description	No. Used
1	26-7970	Decal — Caution (Rotating Blades)	3
2	3256-24	Washer — Plain	A/R
3	3253-21	Washer — Lock	2
4	3218-3	Nut — Jam	2
5	3256-27	Washer — Plain	1
6	3296-33	Nut — Lock	1
7	28-9060	Plate — Idler	1
8	5-1077	Key Square	1
9	27-8580	Idler Socket	1
10	3296-5	Nut — Lock	1
11	52-4580	Pulley — Idler	1
12	3211-8	Screw — Cap Hex Hd.	1
13	27-1160	V-Belt	1
14	302-2	Grease Fitting	3
15	32146-20	Nut — Hex Lock Jam	3
16	7-4150	Washer	3
17	27-0970	Pulley	3

Ref. No.	Part No.	Description	No. Used
18	253-139	Seal — Wave	6
19	46-8530	Bearing Assembly	3
20	3231-22	Bolt — Carriage	18
21	27-7680	Ring Deck Support	2
22	61-4160	Housing — Spindle	3
23	32128-21	Nut — Locking Flange	18
24	27-0920	Spindle Shaft	3
25	27-0990	Blade	3
26	27-1000	Cup — Anti Scalp	3
27	3253-27	Washer — Lock	3
28	44-2200	Screw — Blade	3
29	27-0950	Spacer — Spindle Bearing	3
30	26-7960	Decal — Caution	1
31	42-4650	Cutting Deck	1
32	40-6400	Shaft — Roller	1
33	3272-11	Pin — Cotter	2
34	29-4820	Roller	2

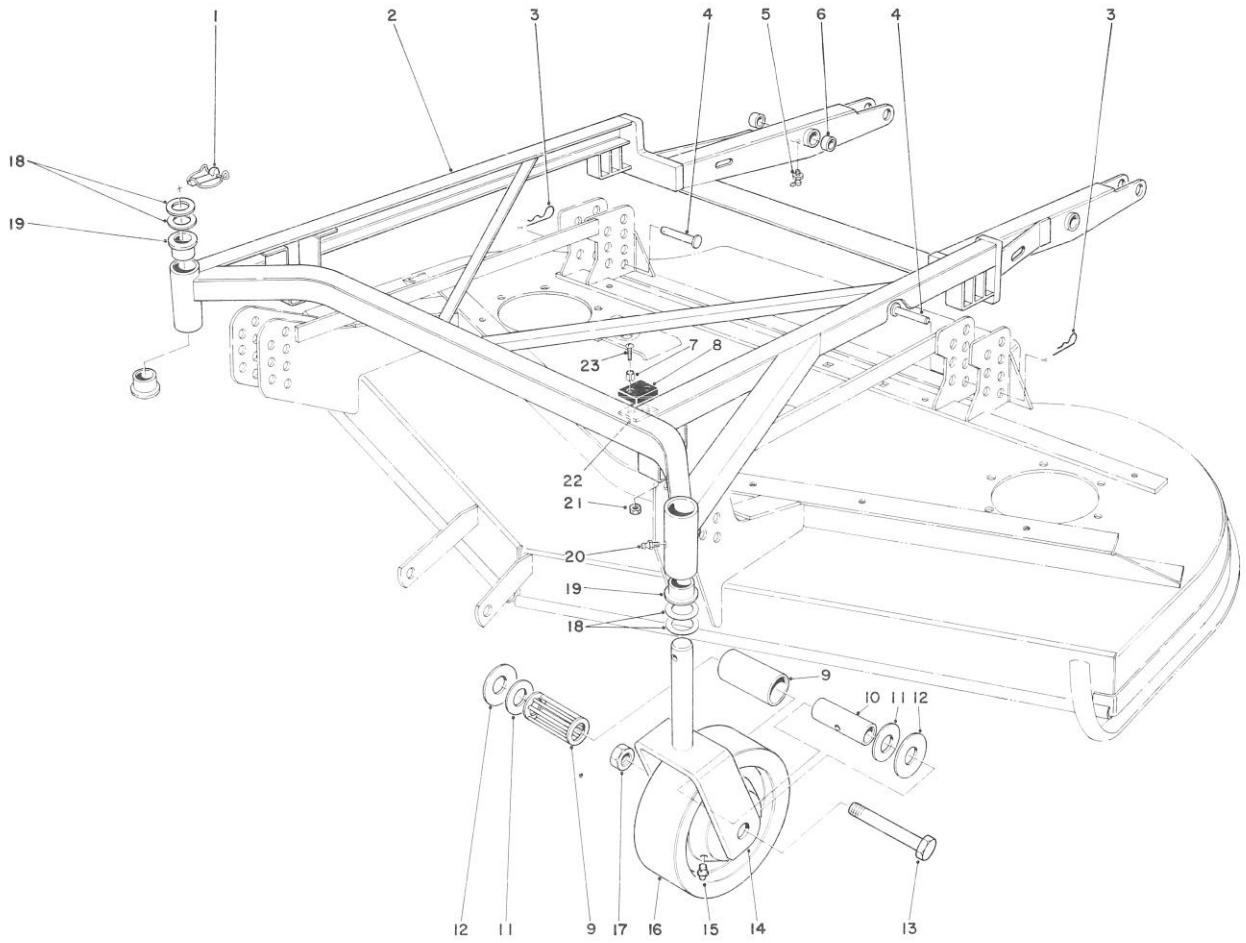

CUTTING UNIT MODEL NO. 30568 (Continued)

Ref. No.	Part No.	Description	No. Used
1	3290-384	Lynch Pin	2
2	44-2170	Frame — Deck Assembly (Incl. Ref. #5, 6 & 19)	1
3	3290-355	Pin — Hair	4
4	283-55	Pin Clevis	4
5	302-40	Grease Fitting	2
6	256-101	Bushing	4
7	40-9520	Spacer — Split	4
8	40-0330	Cushion Rubber	2
9	27-1210	Roller Bearing	2
10	27-1200	Spanner Bushing	2
11	27-1180	Bearing Retainer	4
12	27-1170	Thrust Washer	4

Ref. No.	Part No.	Description	No. Used
13	328-9	Screw — Cap Hex. Hd.	2
14	40-0370	Front Castor Fork	2
15	302-55	Fitting — Grease	2
16	27-1050	Wheel Assembly (Incl. Ref. #9-12 & 15)	2
17	32153-6	Nut — Lock	2
18	3-6781	Washer — Thrust	8
19	28-9290	Bushing — Special	4
20	302-5	Fitting — Grease	2
21	3296-2	Nut — Lock	4
22	42-6200	Shim — Cushion	3
23	32122-28	Screw — Machine Truss Hd.	4

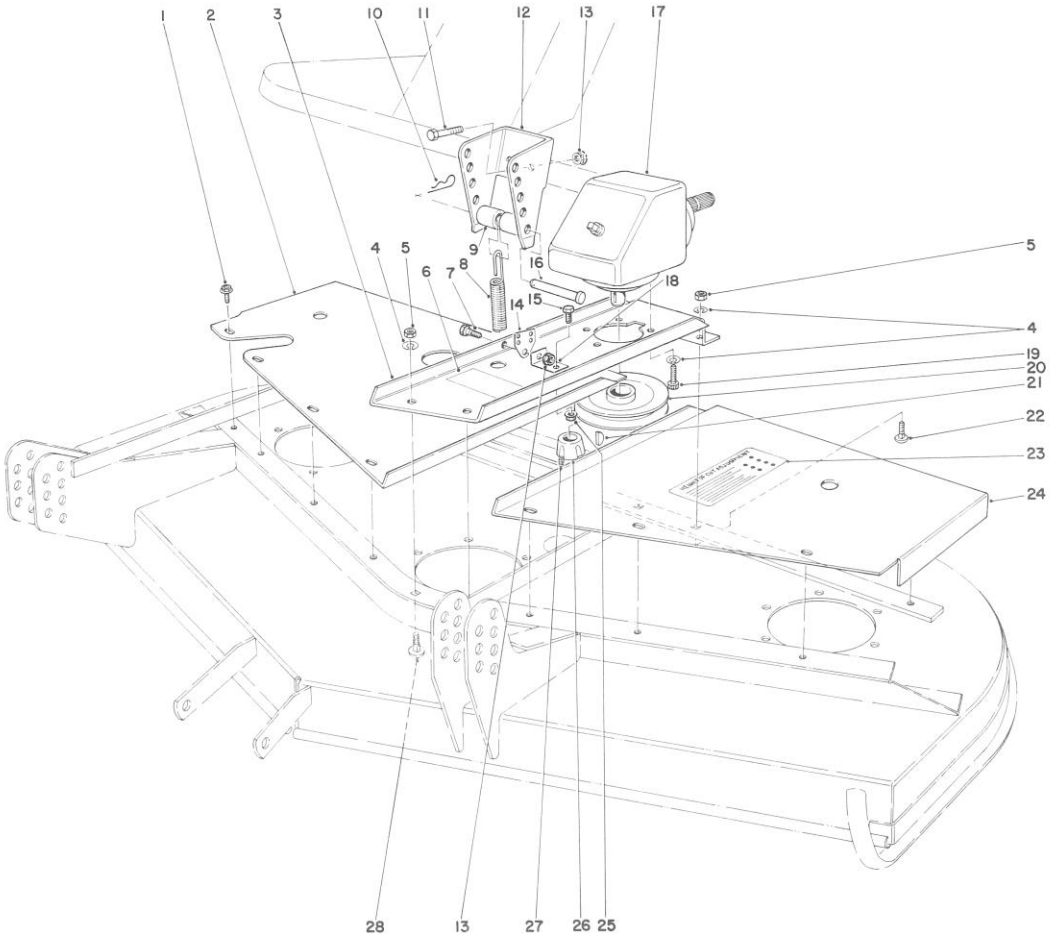

CUTTING UNIT MODEL NO. 30568 (Continued)

Ref. No.	Part No.	Description	No. Used
1	46-8560	Screw Self Tapping Flange Hex. Hd.	11
2	40-0410	Cover R.H.	1
3	40-0360	Base — Gear Box	1
4	3253-21	Washer — Lock	9
5	3217-7	Nut	4
6	44-6470	Decal — Caution	1
7	46-3380	Shoulder Bolt	1
8	46-3200	Spring — Extension	1
9	40-0300	Spacer	1
10	3290-355	Pin — Hair	1
11	323-11	Capscrew	2
12	46-2620	Bracket — Spring	1
13	3290-357	Nut — Lock	3
14	46-3190	End — Spring	1

Ref. No.	Part No.	Description	No. Used
15	322-4	Screw — Cap Hex. Hd.	2
16	283-55	Clevis Pin	1
17	8-0909	Gear Box	1
18	46-3590	Bracket — Extension	1
19	3274-1	Capscrew Socket Hd.	5
20	27-6110	Pulley	1
21	3257-5	Key Woodruff	1
22	3231-2	Bolt — Carriage	2
23	42-6860	Decal — Height of Cut	1
24	42-4660	Cover L.H.	1
25	32128-20	Nut — Lock Flange Hex	2
26	27-6140	Bushing — Taper Lock	1
27	3245-9	Set Screw Socket Hd.	1
28	3231-27	Bolt — Carriage	2

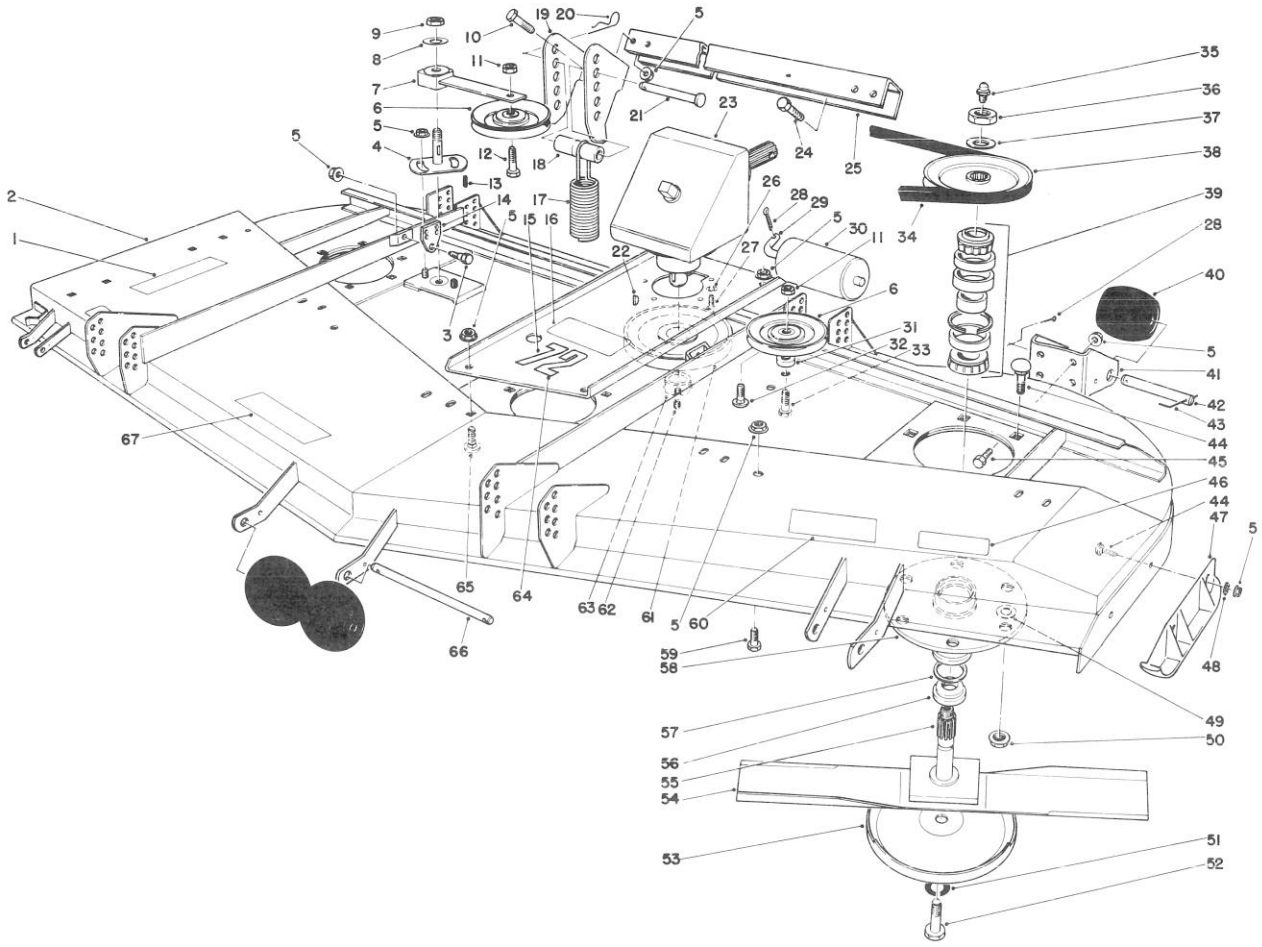

CUTTING UNIT MODEL NO. 30575

Ref. No.	Part No.	Description	No. Used
1	26-7980	Decal — Caution	1
2	57-0300	Housing	1
3	46-3380	Bolt — Shoulder	2
4	44-6300	Idler Plate	1
5	3290-357	Nut — Lock	22
6	52-4580	Pulley — Idler	2
7	27-8580	Idler Socket & Bushing Assembly	1
8	3256-27	Washer	1
9	3296-33	Nut — Lock	1
10	323-6	Screw — Cap Hex. Hd.	4
11	3296-5	Nut — Lock	2
12	3211-8	Screw — Cap Hex. Hd.	1
13	5-1077	Key Square	1
14	46-3190	End Spring	2
15	57-0540	Base — Gear Box	1
16	44-6470	Decal — Caution	1
17	46-3200	Spring — Extension	2
18	40-0300	Spacer	2
19	46-2620	Bracket — Spring	2
20	3290-355	Hair Pin Cotter	2
21	283-55	Clevis Pin	2
22	3257-5	Key — Woodruff	1

Ref. No.	Part No.	Description	No. Used
23	8-0909	Gear Box	1
24	323-11	Screw — Cap Hex. Hd.	2
25	57-0550	Adapter — Spring Bracket	1
26	3253-21	Washer — Lock	5
27	3274-1	Screw — Cap Socket Hd.	5
28	3272-11	Pin — Cotter	7
29	40-0340	Shaft — Rear Roller	2
30	36-1740	Roller — Deck	2
31	44-6390	Spacer	1
32	3231-27	Bolt — Carriage	2
33	3211-9	Screw — Cap Hex. Hd.	1
34	57-0240	V-Belt	1
35	302-2	Fitting Grease	3
36	32146-20	Nut — Hex Jam	3
37	7-4150	Washer	3
38	57-0560	Pulley	3
39	46-8530	Bearing Assembly	3
40	29-4820	Roller	6
41	57-0580	Bracket — Roller Left Rear	1
*	57-0590	Bracket Roller Right Rear	1
42	57-0680	Roller Shaft	4
43	57-0690	Cotter Pin — Special	5
44	3231-22	Bolt — Carriage	20

*Not Illustrated.

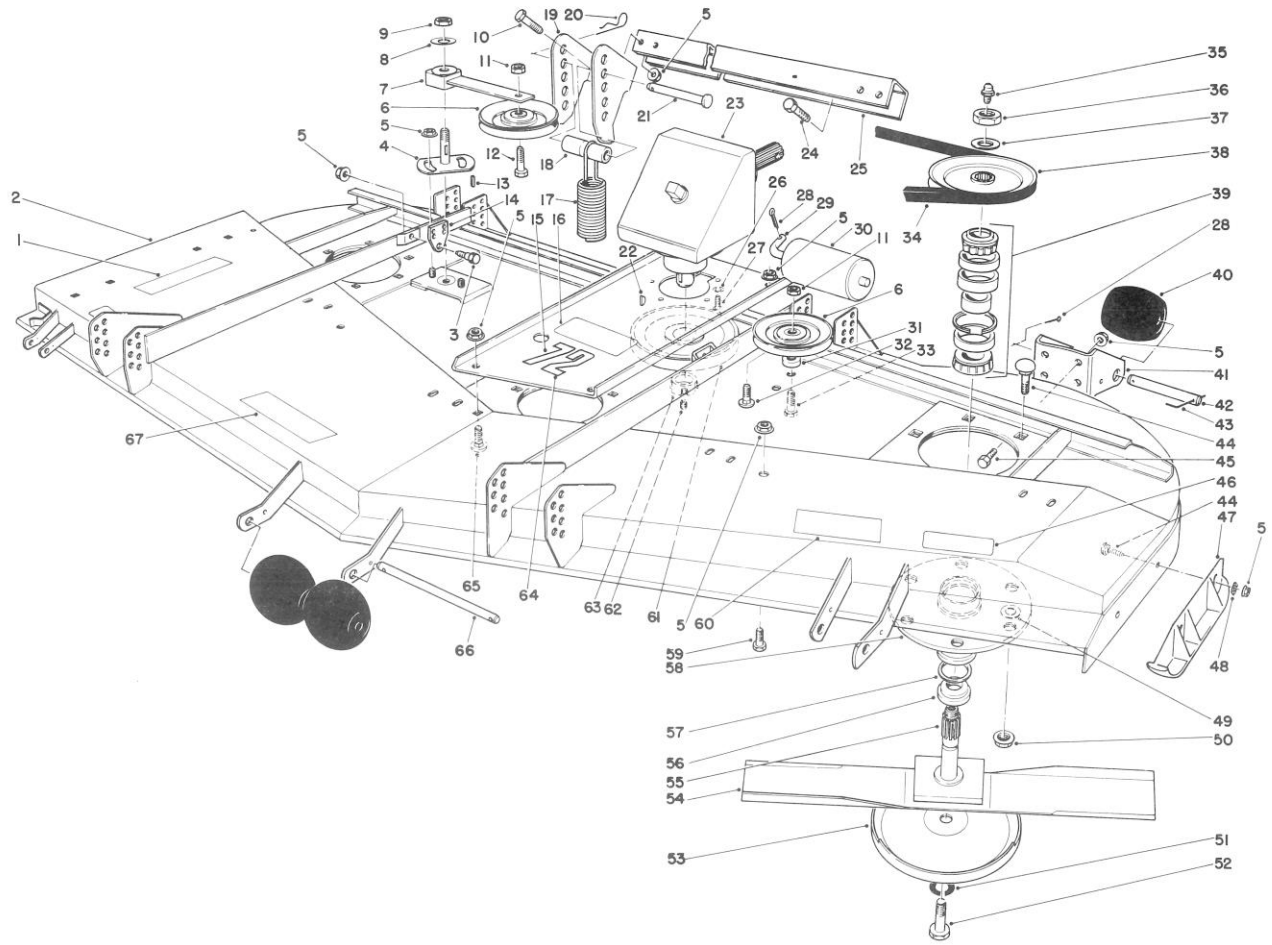

CUTTING UNIT MODEL NO. 30575 (Continued)

Ref. No.	Part No.	Description	No. Used
45	323-7	Screw — Cap Hex. Hd.	4
46	26-7970	Decal — Caution	2
47	57-0570	Skid	1
48	3290-224	Washer — Lock	2
49	3256-24	Washer	A/R
50	32128-21	Nut — Lock Flange	18
51	3253-27	Washer — Lock	3
52	44-2200	Capscrew Blade	3
53	27-1000	Anti-Scalp Cup	3
54	57-0250	Blade	3
55	27-0920	Spindle Shaft	3
56	27-0950	Spacer — Spindle Bearing	3

Ref. No.	Part No.	Description	No. Used
57	253-139	Seal — Wave	6
58	61-4160	Spindle Housing	3
59	323-4	Screw — Cap Hex. Hd.	2
60	57-0770	Decal — Rear Weight	1
61	27-6110	Pulley — Gear Box	1
62	3245-9	Screw — Set Socket Hd.	2
63	27-6140	Bushing Taper Lock	1
64	57-0280	Decal — 72	1
65	3231-21	Bolt — Carriage	2
66	40-6400	Shaft — Roller	1
67	57-0270	Decal — Caution	1

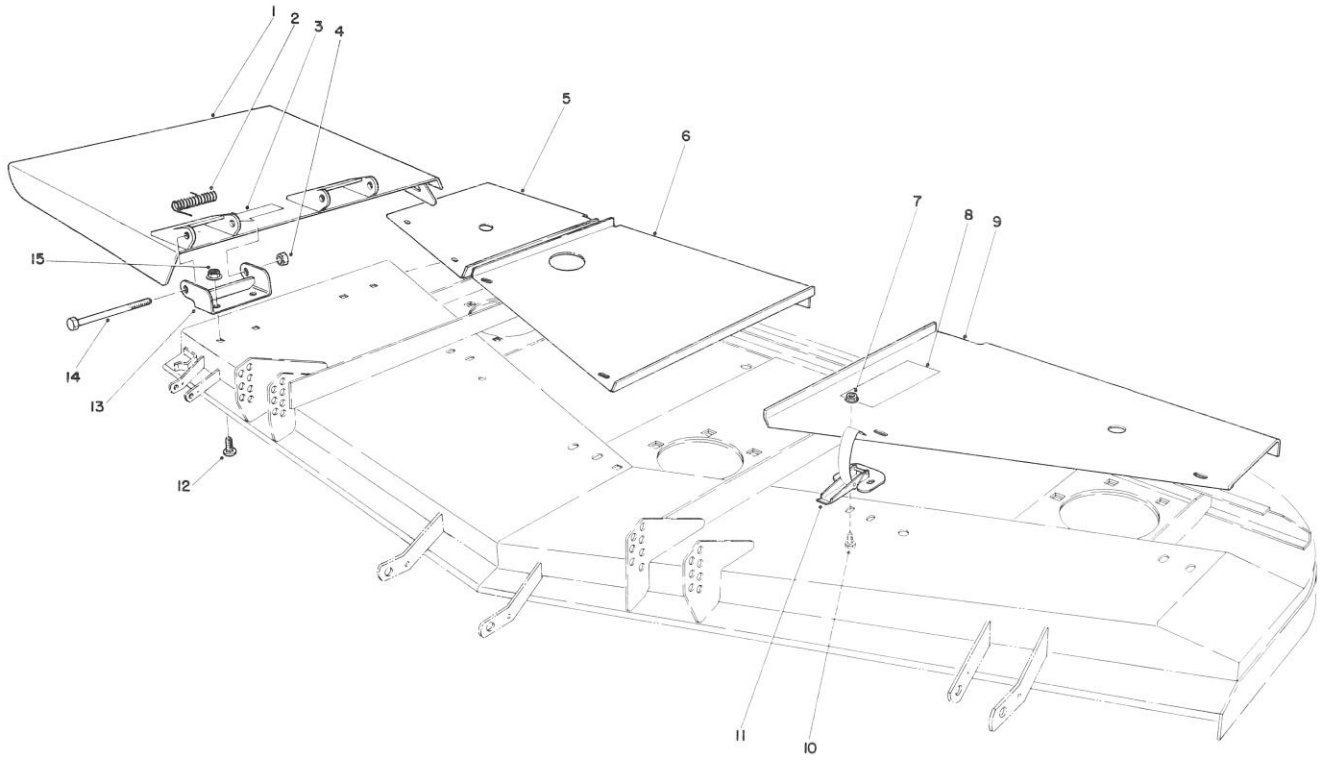

CUTTING UNIT MODEL NO. 30575 (Continued)

Ref. No.	Part No.	Description	No. Used
1	52-5790	Deflector	1
2	51-1550	Spring	2
3	26-7120	Decal — Blade Line	1
4	32153-5	Nut — Lock	2
5	57-0230	Cover R.H.	1
6	57-0210	Cover — Center	1
7	32128-17	Nut — Lock	12
8	42-6860	Decal — Height of Cut	1

Ref. No.	Part No.	Description	No. Used
9	57-0220	Cover L.H.	1
10	3290-321	Screw — Machine Hex Slotted	12
11	249-21	Latch — Draw	6
12	3231-27	Bolt — Carriage	4
13	51-1530	Hinge Bracket	2
14	325-17	Screw — Cap Hex. Hd.	2
15	3290-357	Nut — Lock, Hex Flange	4

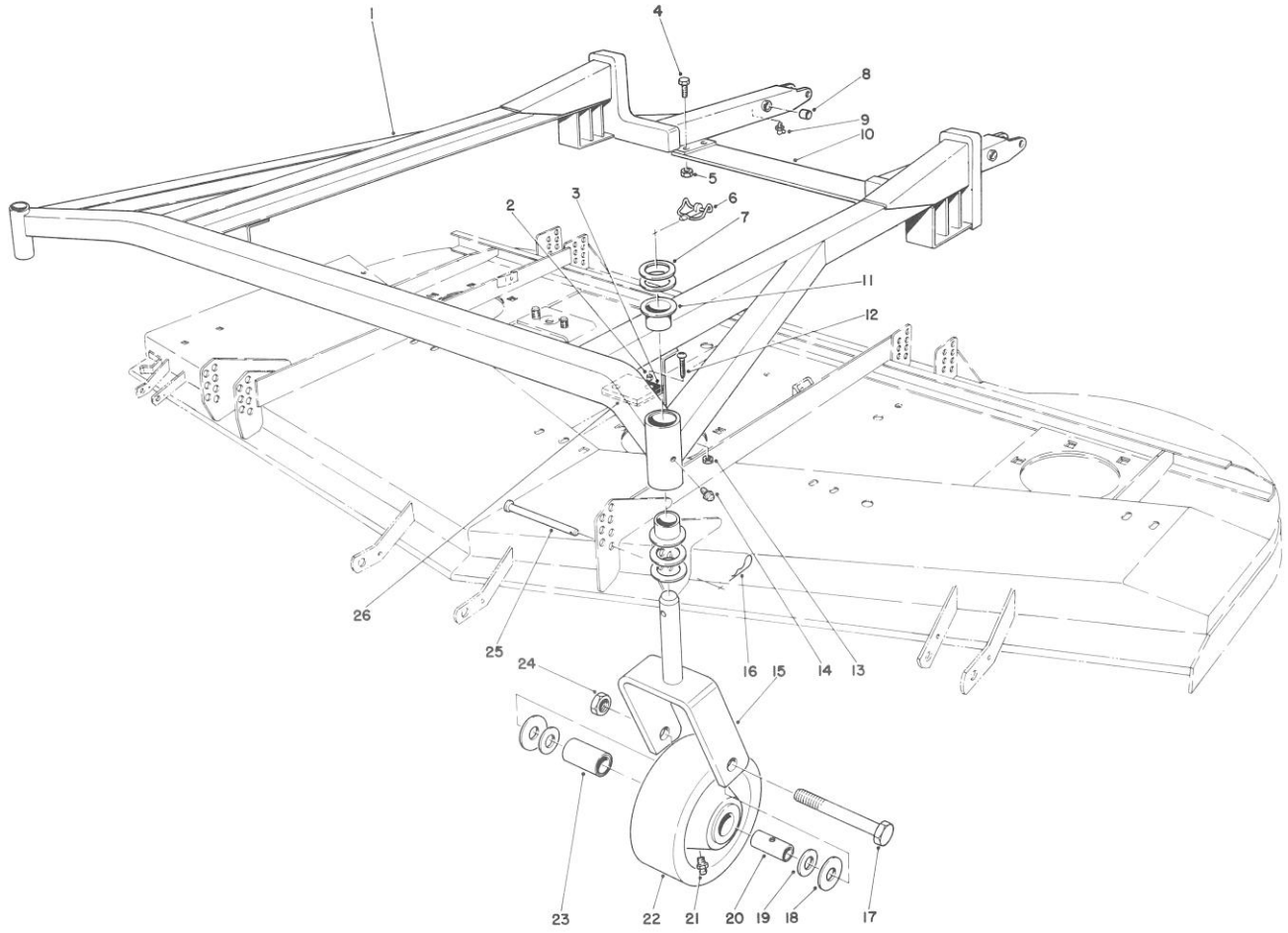

CUTTING UNIT MODEL NO. 30575 (Continued)

Ref. No.	Part No.	Description	No. Used
1	57-0600	Suspension Frame (Incl. Ref. # 4-5, 8-10 & 11)	1
2	40-9520	Spacer — Split	4
3	40-0330	Cushion — Rubber	2
4	323-6	Screw — Cap Hex. Hd.	4
5	32153-2	Nut — Lock	4
6	3290-384	Lynch Pin	2
7	3-6781	Washer — Thrust	8
8	256-101	Bushing	2
9	302-40	Fitting — Grease	2
10	57-0780	Plate — Lift Arm	2
11	28-9290	Bushing — Special	4
12	32122-28	Screw — Machine Truss Hd.	4
13	3296-2	Nut — Lock	4

Ref. No.	Part No.	Description	No. Used
14	302-5	Grease Fitting	2
15	40-0370	Castor Fork	2
16	3290-355	Pin — Hair	4
17	328-9	Screw — Cap Hex. Hd.	2
18	27-1170	Thrust Washer	4
19	27-1180	Bearing — Retainer	4
20	27-1200	Spanner Bushing	2
21	302-55	Grease Fitting	2
22*	27-1050	Castor Wheel Assembly (Incl. Ref. #18-21 & 23)	2
23	27-1210	Roller Bearing	2
24	32153-6	Nut — Lock	2
25	283-55	Pin — Clevis	4
26	42-6200	Shim — Cushion	A/R

Note: See Page 54 for pneumatic caster wheel assembly.

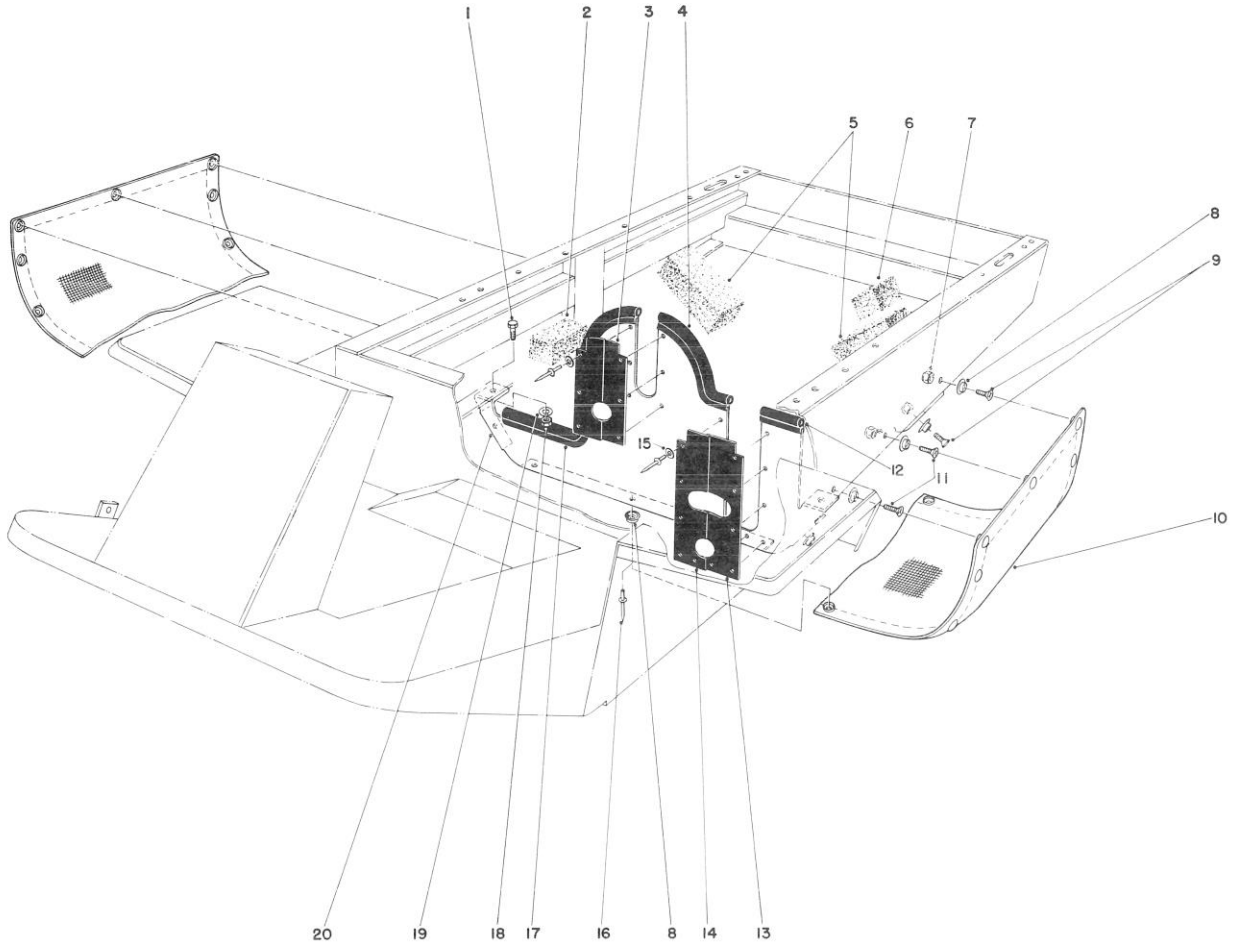

ENGINE SHIELD KIT MODEL #30563

Ref. No.	Part No.	Description	No. Used
1	323-5	Screw – Cap Hex Hd.	4
2	46-8130	Foam Sides	2
3	46-8170	Flap – Rubber, Drive Coupling	2
4	46-8200	Seal Trim	1
5	46-8110	Foam – Rear	2
6	46-8120	Foam – Rear	1
7	3296-9	Nut – Lock	7
8	41-9060	Stud – Snap	16
9	32108-99	Screw – Flat Hd.	7
10	41-8920	Screen – Grass	1
11	32104-91	Screw Self Tapping Phillips Flat Hd.	4

Ref. No.	Part No.	Description	No. Used
12	46-8190	Seal – Trim	1
13	46-8150	Flap – Rubber P.T.O. L.H.	1
14	46-8160	Flap – Rubber P.T.O. R.H.	1
15	5-1254	Washer	16
16	3290-55	Rivet – Pop	21
17	46-8210	Seal – Trim	1
18	3217-7	Nut	4
19	3253-29	Washer – Lock	4
20	46-8180	Shield Assembly Front (Incl. Ref. #3-4, 8, & 12-17)	1

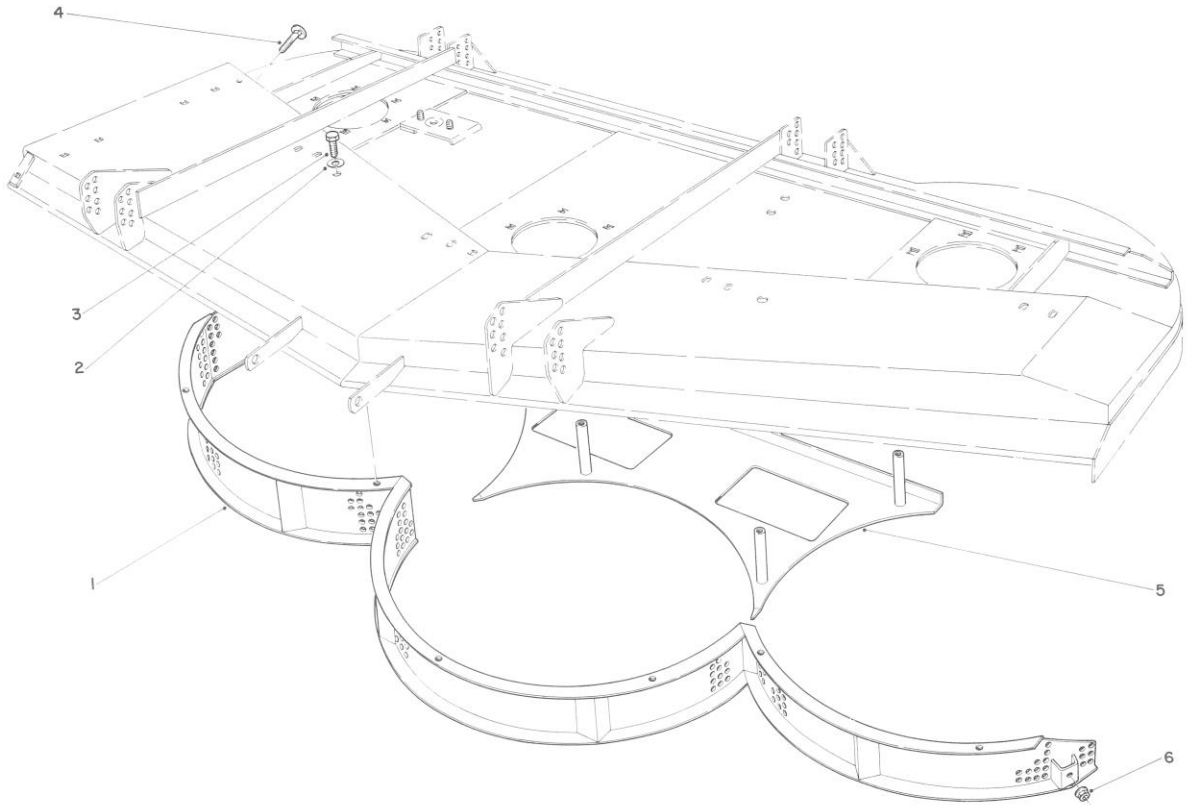

MULCHER KIT MODEL NO. 30792 (Optional)

(Used With Model 30562 Cutting Unit)

Ref. No.	Part No.	Description	No. Used
1	46-3010	Mulcher Screen	1
2	3253-21	Washer – Lock	10
3	323-4	Capscrew – Hex. Hd.	11

Ref. No.	Part No.	Description	No. Used
4	3230-2	Bolt – Carriage	1
5	46-3150	Shelf – Bottom Rear	1
6	3290-357	Nut – Lock Hex Flange	6

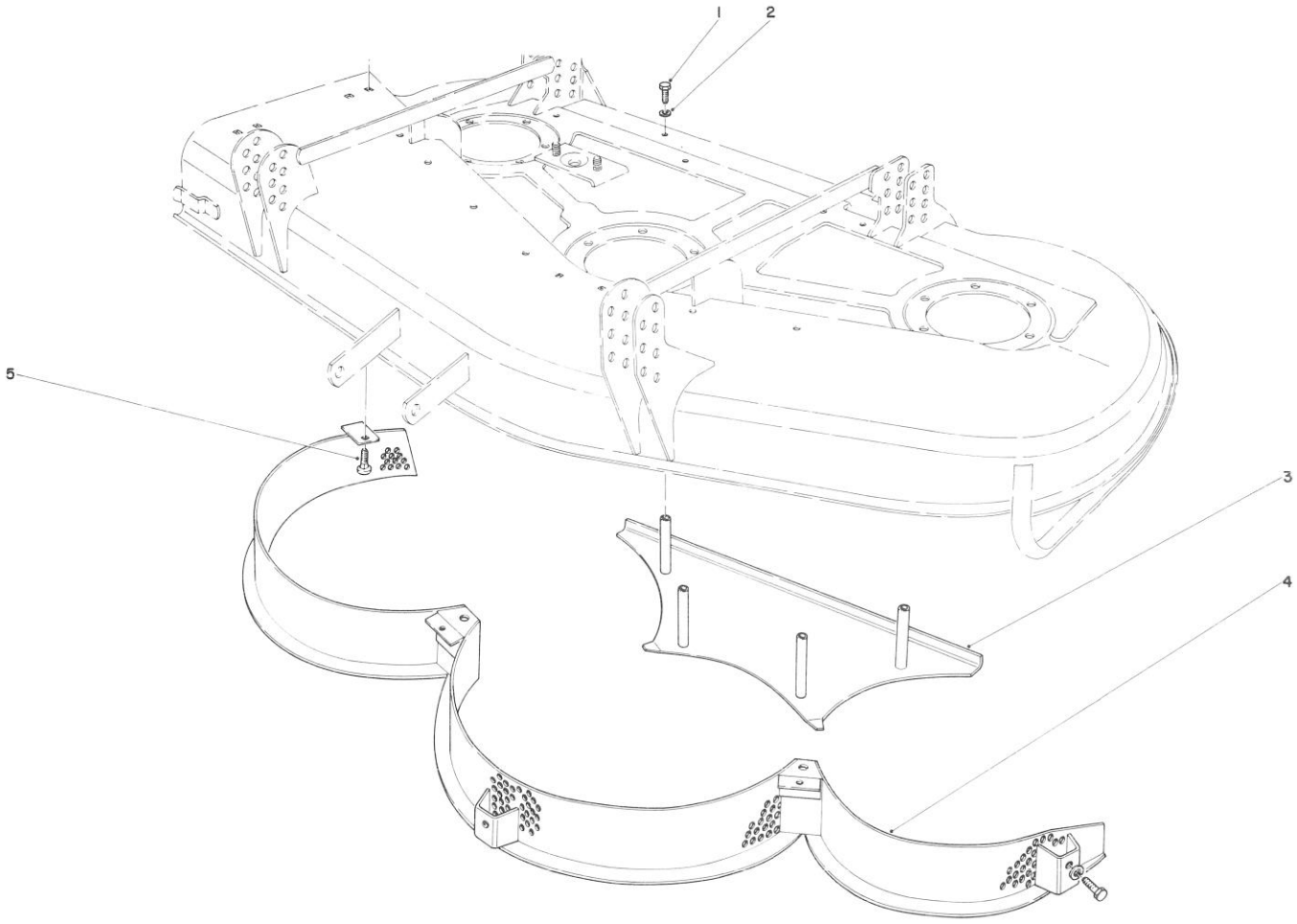

MULCHER KIT MODEL NO. 30700 (Optional)

(For Cutting Unit Model 30555)

Ref. No.	Part No.	Description	No. Used
1	323-6	Capscrew	8
2	3253-21	Lockwasher	8
3	42-6340	Bottom Rear Shelf	1

Ref. No.	Part No.	Description	No. Used
4	42-6310	Mulcher Screen	1
5	3230-1	Carriage Bolt	1

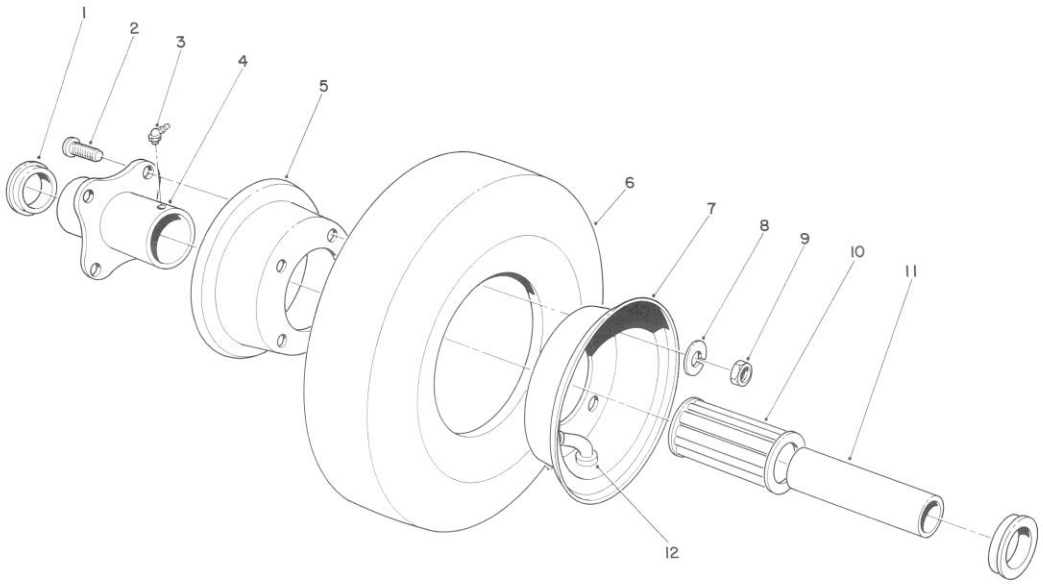

PNEUMATIC CASTER WHEEL ASSEMBLY (Optional)

Ref. No.	Part No.	Description	No. Used
1	54-8840	Retainer	2
2	54-8890	Bolt – Wheel	4
3	302-10	Fitting Grease	1
4	54-8830	Hub – Centered	1
5	54-8910	Wheel Half – Female	1
6	54-8870	Tire	1
7	54-8900	Wheel Half – Male	1

Ref. No.	Part No.	Description	No. Used
8	3253-4	Washer – Lock	4
9	3217-6	Nut – Hex	4
10	54-8850	Bearing – Roller Open Cage	1
11	54-8860	Bushing – Spanner	1
12	54-8880	Tube w/Valve	1
*	54-8820	Caster Assembly (Complete)	2

*Not Illustrated

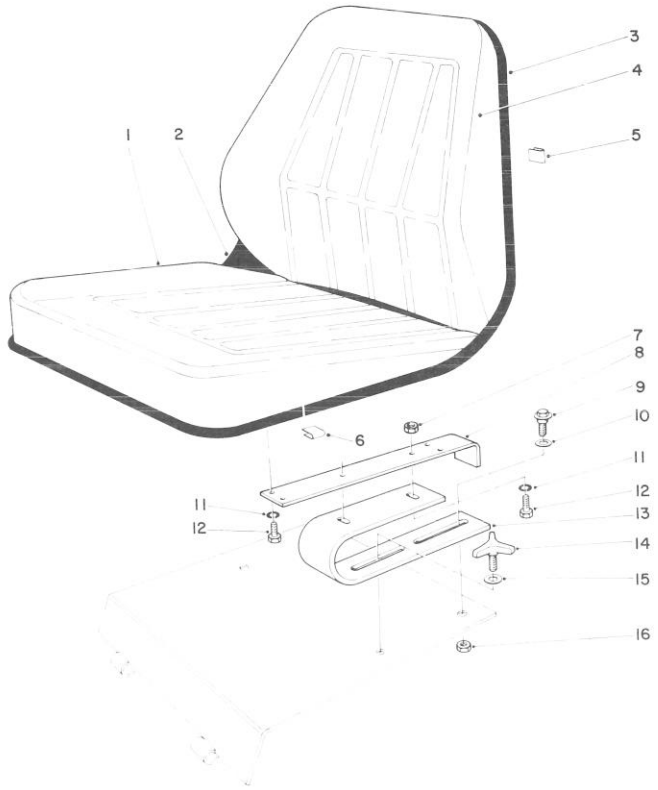

STANDARD SEAT KIT MODEL NO. 30764

Ref. No.	Part No.	Description	No. Used
1	351-76	Seat – Cushion (Incl. Ref. #5 & 6)	1
2	351-77	Shell	1
3	351-78	Edging	2
4	351-75	Backrest (Incl. Ref. #5 & 6)	1
5	351-79	Clip	6
6	351-80	Clip	1
7	3217-6	Nut – Hex	4
8	46-9120	Mount – Seat	2

Ref. No.	Part No.	Description	No. Used
9	27-5240	Bolt – Shoulder	2
10	3256-26	Washer – Plain	2
11	3253-4	Washer – Lock	8
12	322-5	Screw – Cap Hex Hd.	8
13	46-9110	Spring – Seat	2
14	27-4570	Handle – Adjustment	2
15	36-8020	Washer	2
16	3296-39	Nut – Lock	2
*	49-8130	Seat Assembly (Incl. Ref. #1-6)	1

*Not Illustrated

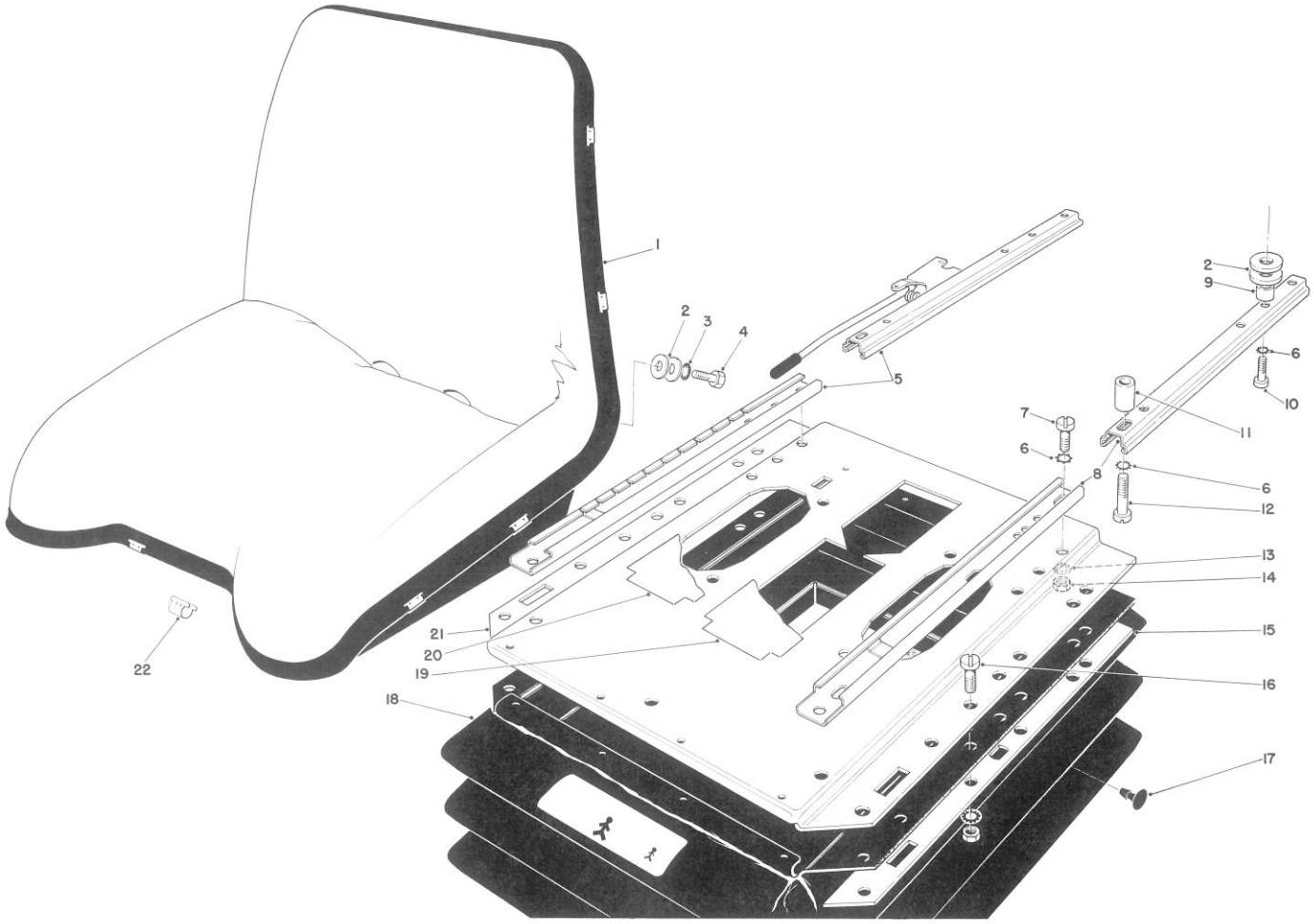

DELUXE SEAT KIT MODEL NO. 30786

Ref. No.	Part No.	Description	No. Used
1	39-5730	Seat Bucket Complete	1
2	39-5690	Washer 13 MM	8
3	39-5680	Serrated Washer	2
4	39-5670	Capscrew 7/16 – 20 U.N.F.	2
5	40-3790	Adjustment Track & Latch	1
6	40-3800	Serrated Washer	8
7	40-3810	Cylinder Bolt M8X16	4
8	40-3820	Adjustment Track	1
9	40-3830	Sleeve	2
10	40-3840	Cylinder Bolt M8X25MM	2
11	40-3850	Sleeve	2
12	40-3860	Cylinder Bolt	2

Ref. No.	Part No.	Description	No. Used
13	40-3870	Spring Washer	6
14	40-3880	Nut M8	6
15	40-3890	Trim	2
16	39-9220	Capscrew M8X16	6
17	39-5710	Plug	24
18	40-3900	Rubber Bellows	1
19	40-3910	Cover – Center	1
20	40-3920	Cover	2
21	40-3930	Upper Suspension Plate Complete	1
22	39-9540	Outside Bead Clip	13
*	37-9630	Seat ASM – Complete	1

*Not Illustrated

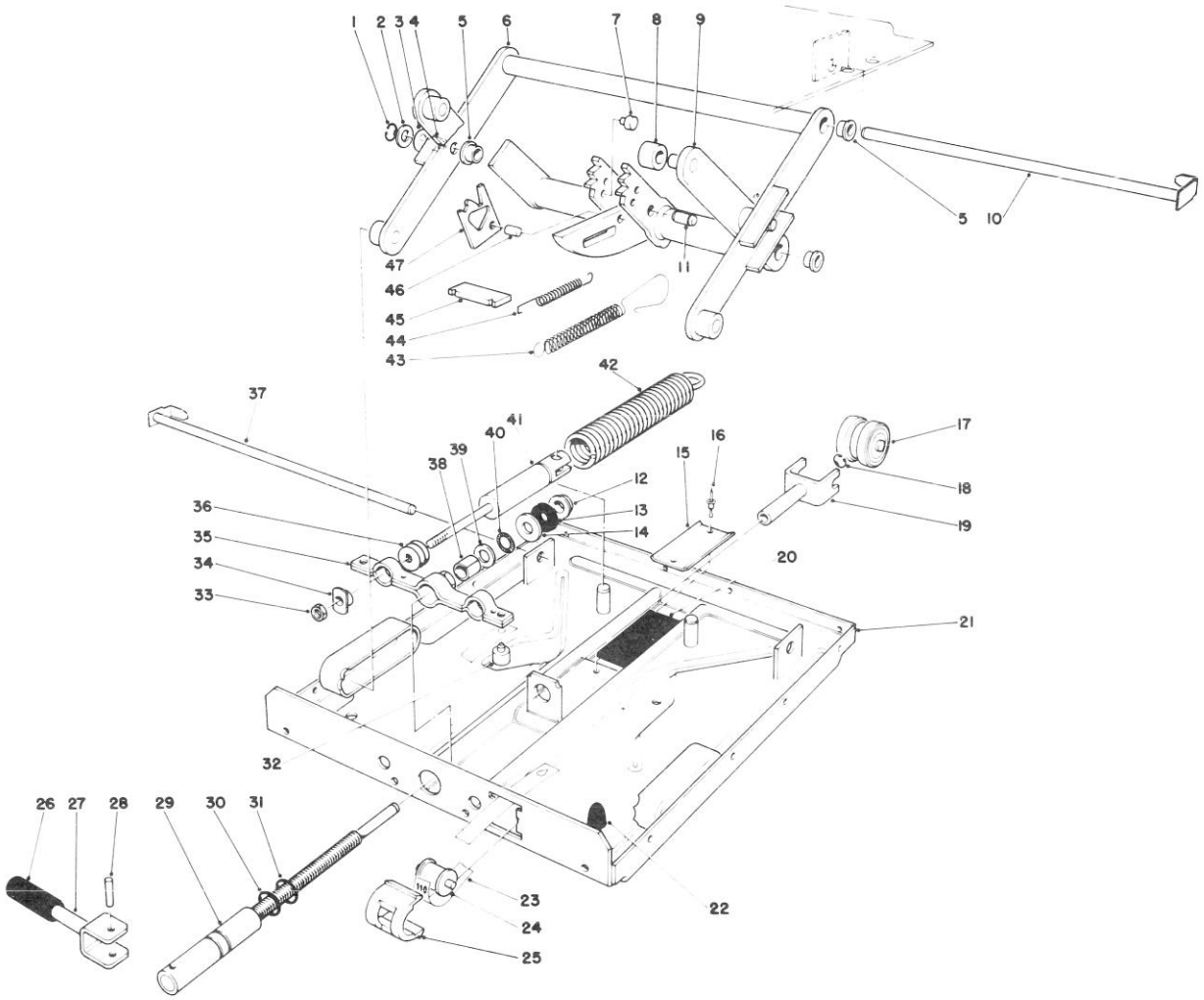

DELUXE SEAT KIT MODEL NO. 30786 (Continued)

Ref. No.	Part No.	Description	No. Used
1	40-3950	Washer	2
2	39-9500	Washer 13 MM	2
3	40-3960	Washer	2
4	40-3970	Bearing Bushing	2
5	40-3980	Bearing	4
6	40-3990	Swing Arm – Outside	1
7	40-4000	Bolt	2
8	40-4010	Roller	4
9	40-4020	Swing Arm Inside	1
10	40-4030	Pin	1
11	40-4040	Grooved Locking Pin 08X16MM	2
12	40-4050	Sleeve	1
13	40-4060	Rubber Washer	1
14	40-4070	Washer 8 MM	1
15	40-4080	U-Track	1
16	40-4090	Plate 4X 10MM	2
17	40-4100	Trible-Bearing	1
18	39-9310	Retaining Ring	1
19	40-4110	Fork	1
20	40-4120	Rubber Plate	1
21	40-4130	Lower Suspension Plate – Complete (Incl. Ref. #15 - 16 & 20)	1
22	39-9520	Rubber Bumper	2

Ref. No.	Part No.	Description	No. Used
23	40-4140	Weight Indicator Band	1
24	40-4150	Roller	1
25	40-4160	Guide Sleeve	1
26	40-4170	Handle	1
27	40-4180	Toggle	1
28	40-4190	Grooved Pin 5X28MM	1
29	40-4200	Pin	1
30	40-4210	Rubber Ring 14MM Black	1
31	40-4220	Rubber Ring 14MM Red	1
32	40-4230	Plug	1
33	40-4240	Nut	2
34	40-4250	Weld Nut	2
35	40-4260	Spring Bracket	1
36	40-4270	Threaded Rod	2
37	40-4280	Pin	1
38	40-4290	Sleeve 14X 1X 19MM	1
39	40-4300	Washer	1
40	40-4310	Thrust Needle Bearing	1
41	40-4320	Shock Absorber	2
42	40-4330	Coil Spring	2
43	40-4340	Coil Spring	1
44	40-4350	Coil Spring	2
45	40-4360	Plate	1
46	40-4370	Bolt	1
47	40-4380	Release Bracket	2

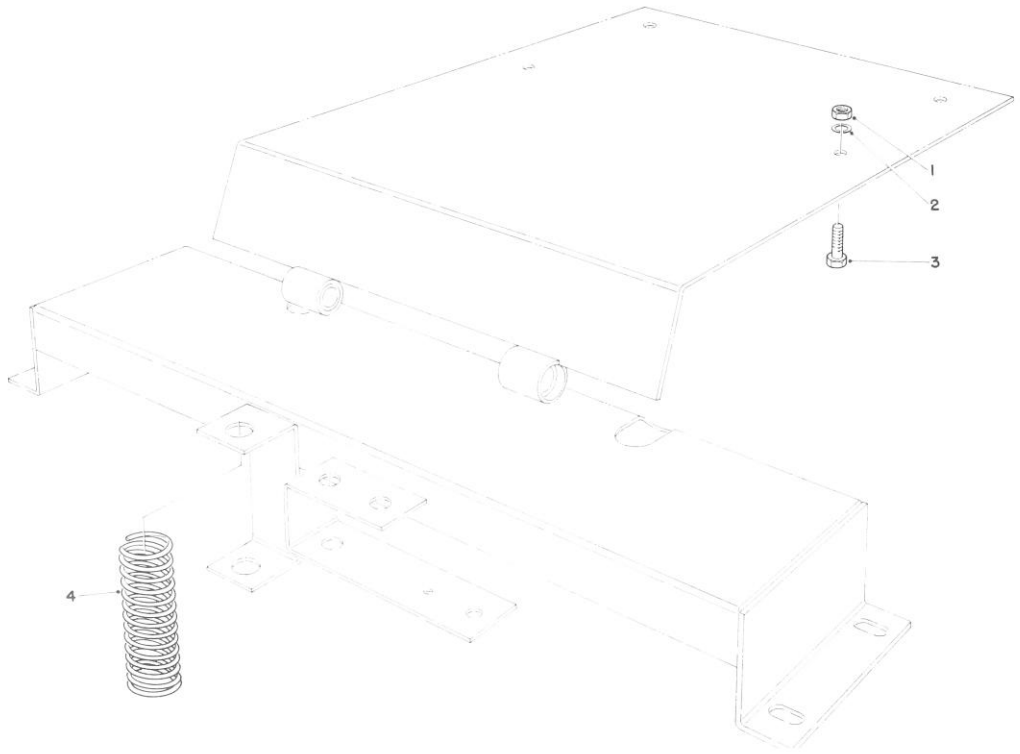

DELUXE SEAT KIT MODEL NO. 30786 (Continued)

Ref. No.	Part No.	Description	No. Used
1	3217-6	Nut	4
2	3253-24	Lockwasher	4

Ref. No.	Part No.	Description	No. Used
3	322-3	Capscrew	4
4	37-9780	Spring – Compression	1

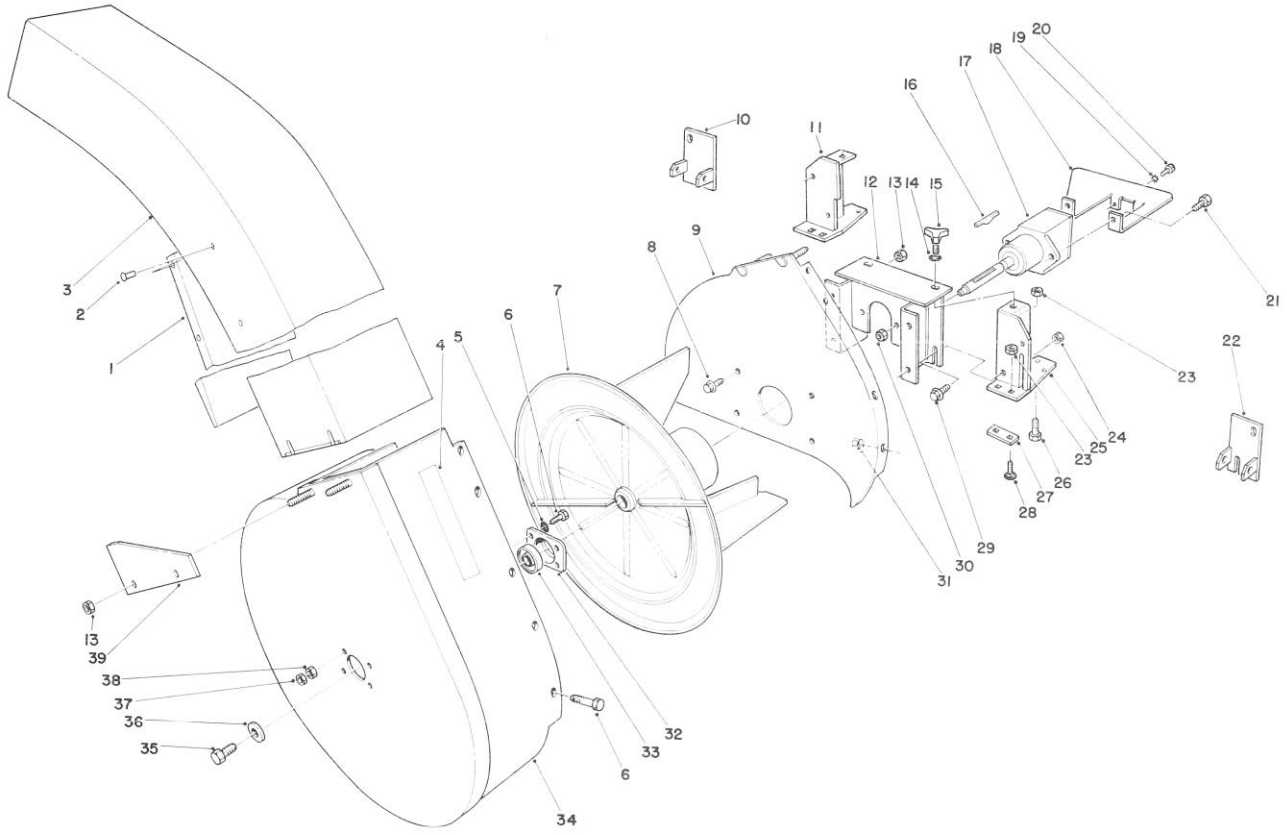

GRASS COLLECTOR MODEL NO. 30558 (Optional)

Ref. No.	Part No.	Description	No. Used
1	44-5290	Deflector — Chute	1
2	3290-409	Rivet	8
3	44-5300	Chute Assembly (Incl. Ref. #1 & 2)	1
4	43-1110	Decal — Warning	1
5	3254-8	Washer — Lock	4
6	321-3	Screw — Hex. Hd.	13
7	56-4780	Impeller	1
8	3234-5	Screw — Flange	4
9	59-5070	Mounting Plate	1
10	59-4980	Pivot Bracket — Deflector L.H.	1
11	59-5050	Bracket L.H.	1
12	59-5140	Blower Mount	1
13	3296-29	Nut	8
14	3256-24	Washer	2
15	27-4571	Knob	2
16	3257-40	Key — Hi Pro	1
17	53-4530	Gear Box Assembly	1
18	59-5150	Cover — Gear Box	1
19	3255-17	Washer — Lock	2

Ref. No.	Part No.	Description	No. Used
20	3290-134	Screw — Machine	2
21	323-7	Screw — Hex. Hd.	2
22	59-5000	Pivot Bracket — Deflector R.H.	1
23	32152-1	Nut — Lock	6
24	3218-3	Nut — Jam	2
25	59-5090	Bracket R.H.	1
26	322-3	Capscrew	2
27	44-5460	Plate — Bracket L.H.	2
28	3230-1	Bolt — Carriage	4
29	3234-11	Screw — Flange	2
30	3296-44	Nut — Hex	2
31	3296-42	Nut — Hex	9
32	37-6730	Cup — Bearing	1
33	38-7820	Ball Bearing	1
34	56-4690	Blower Housing	1
35	36-4030	Screw — Hex. Hd.	1
36	43-0940	Spacer — Blower Hub	1
37	3218-1	Nut — Jam	4
38	3217-5	Nut — Hex	4
39	43-0960	Bracket — Chute	2

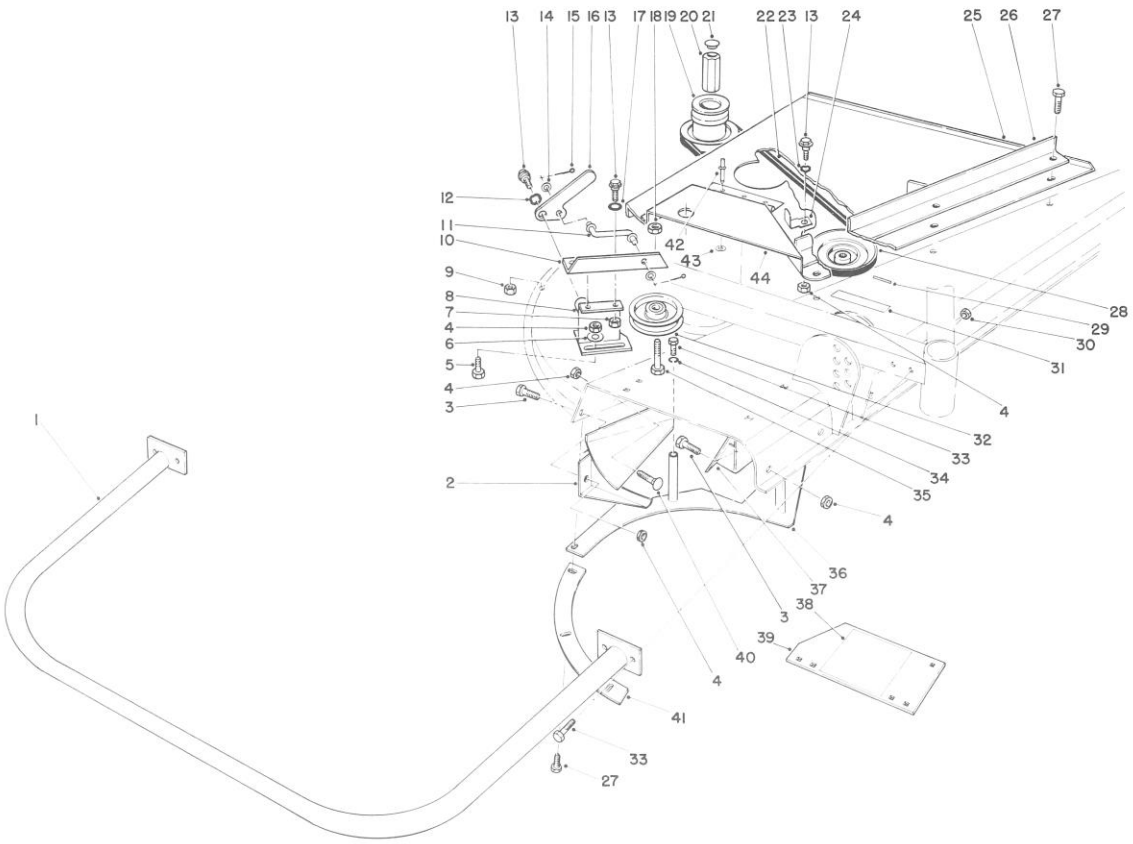

GRASS COLLECTOR MODEL NO. 30558 (Optional)(Continued)

Ref. No.	Part No.	Description	No. Used
1	44-7570	Bumper	1
2	43-4060	Deflector — Rear	1
3	322-4	Screw — Hex. Hd.	3
4	32152-1	Nut — Lock	10
5	322-3	Screw Hex. Hd.	3
6	3256-56	Washer — Plain	3
7	3296-29	Nut — Hex	2
8	59-4920	Bracket — Idler Mounting	1
9	32152-4	Nut — Lock	4
10	59-4930	Slide — Idler	1
11	59-4940	Idler Rod	1
12	3290-211	Washer — Spring	1
13	19-1470	Bolt — Shoulder	4
14	3256-23	Washer — Plain	2
15	3272-6	Pin — Cotter	2
16	56-4900	Lever — Idler	1
17	23-1120	Washer — Flat	2
18	3296-44	Nut — Hex	1
19	59-5170	Pulley (Splined)	1
20	59-5190	Nut — Pulley	1
21	59-5310	Cover — Nut	1
22	59-5270	V-Belt	1
23	3290-211	Washer — Spring	1

Ref. No.	Part No.	Description	No. Used
24	59-5290	Latch	1
25	59-5280	Cover — Right	1
26	43-1130	Spring Bracket	1
27	321-4	Capscrew	7
28	56-4810	Pulley — Gear Box	1
29	32121-8	Pin — Roll	1
30	32152-2	Nut — Lock	4
31	43-1120	Decal — Warning	1
32	56-4920	Pulley — Idler	1
33	323-6	Capscrew	8
34	3253-21	Washer — Lock	4
35	323-7	Screw — Hex. Hd.	1
36	44-7770	Rear Shelf	1
37	46-2350	Front — Deflector	1
38	40-5730	Decal — Caution	1
39	44-5750	Cover Plate Assembly (Incl. Ref. #38)	1
40	3230-1	Carriage Bolt	2
41	44-7780	Shelf R.H.	1
42	3290-409	Rivet — Pop	2
43	3256-21	Washer	2
44	61-8630	Cover Pulley	1
*	44-5480	Blade — High Sail (18") (Opt)	1

*Not Illustrated

GRASS COLLECTOR MODEL NO. 30558 (Optional)(Continued)

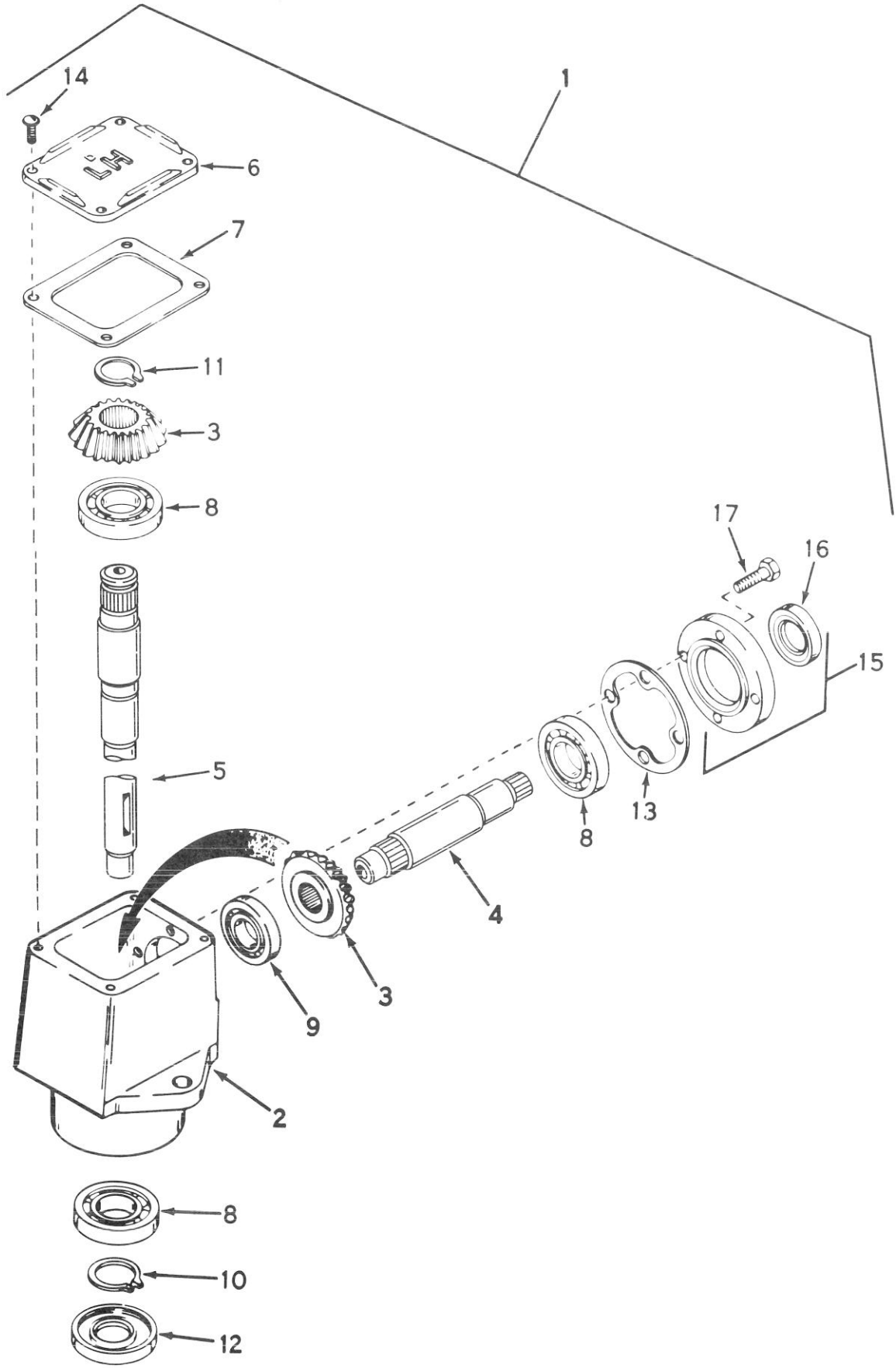

GRASS COLLECTOR MODEL NO. 30558 (Optional) (Continued)

Ref. No.	Part No.	Description	No. Used
1	794402	Head Assy., Left Hand (Incl. Ref. #2-15)	1
2	770026A	Housing, Right Angle Drive	1
3	778046	Gear, Miter	2
4	776250	Shaft, Input	1
5	776249	Shaft, Output	1
6	772035	Cover	1
7	788028	Gasket, Cover	1
8	780034	Bearing, Ball	3
9	780024	Bearing, Ball	1
10	788019	Ring, Snap	1
11	788018	Ring, Snap	1
12	788029	Seal, Oil	1
13	788030	Gasket, Cap	1
14	792025	Screw, Rd. Hd. Self-Tap	4
15	786029	Cap & Seal Assy., Retainer (Incl. Ref. #16 & 17)	1
16	788031	Seal, Oil	1
17	792026	Screw, Hex. Hd.	4

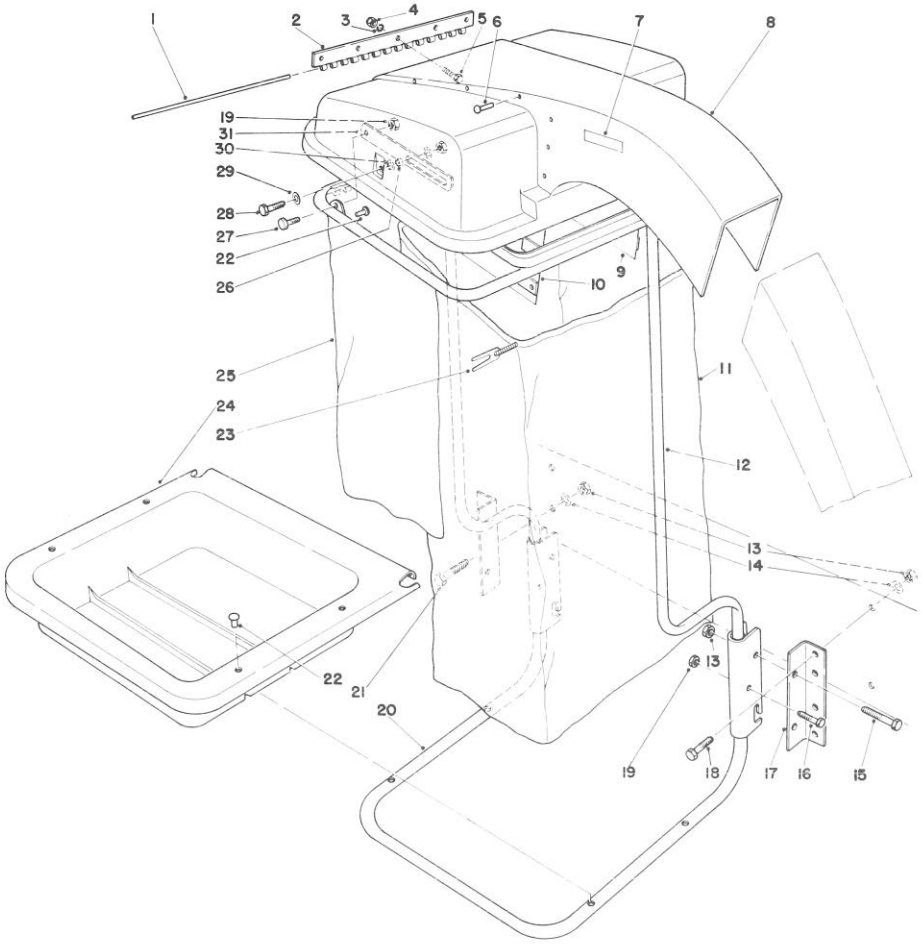

GRASS COLLECTOR MODEL NO. 30558 (Optional)(Continued)

Ref. No.	Part No.	Description	No. Used
1	43-1000	Hinge Pin — Hood	1
2	43-0610	Hinge Half	1
3	3256-14	Washer — Flat	5
4	3296-2	Nut — Lock	5
5	3290-134	Screw — Machine Hex. Hd.	5
6	3290-412	Rivet — Pop	14
7	43-1100	Decal — Caution	2
8	11-2829	Hood Assembly (Incl. Ref. #2-7 & 9-10)	1
9	43-0600	Screen — Left Hand	1
10	43-0570	Screen — Right Hand	1
11	43-0990	Bag — Cloth 32" (7 bushel capacity)	1
*	43-0980	Bag — Cloth 38" (10 bushel capacity) (optional)	1
12	43-0620	Support Tube Assembly — Upper (Incl. Ref. #22 & 25)	1
13	32152-2	Nut — Lock	12
14	3256-3	Washer — Plain	8
15	323-11	Screw — Cap Hex. Hd.	4

Ref. No.	Part No.	Description	No. Used
16	322-11	Screw — Cap Hex. Hd.	2
17	43-1010	Bracket — Frame	4
18	323-7	Screw — Cap Hex. Hd.	7
19	32152-1	Nut — Lock	6
20	43-0720	Support Tube Assembly — Lower (Incl. Ref. #22 & 24)	1
21	323-10	Screw — Cap Hex. Hd.	1
22	3290-409	Rivet — Pop	21
23	3-2781	Cord Retainer	1
*†	36-7770	Cord Retainer (optional)	1
24		Tray — Lower	1
25		Skirt — Bagging Frame	1
26	43-1020	Spacer — Pivot Arm	2
27	322-3	Screw — Hex. Hd.	2
28	322-4	Screw — Hex. Hd.	2
29	3256-56	Washer — Flat	2
30	3256-57	Washer — Fender	4
31	43-1050	Stop — Hood	2
*	44-9720	Template — Bracket	1

*Not Illustrated

†For use with 30 gallon plastic bag.

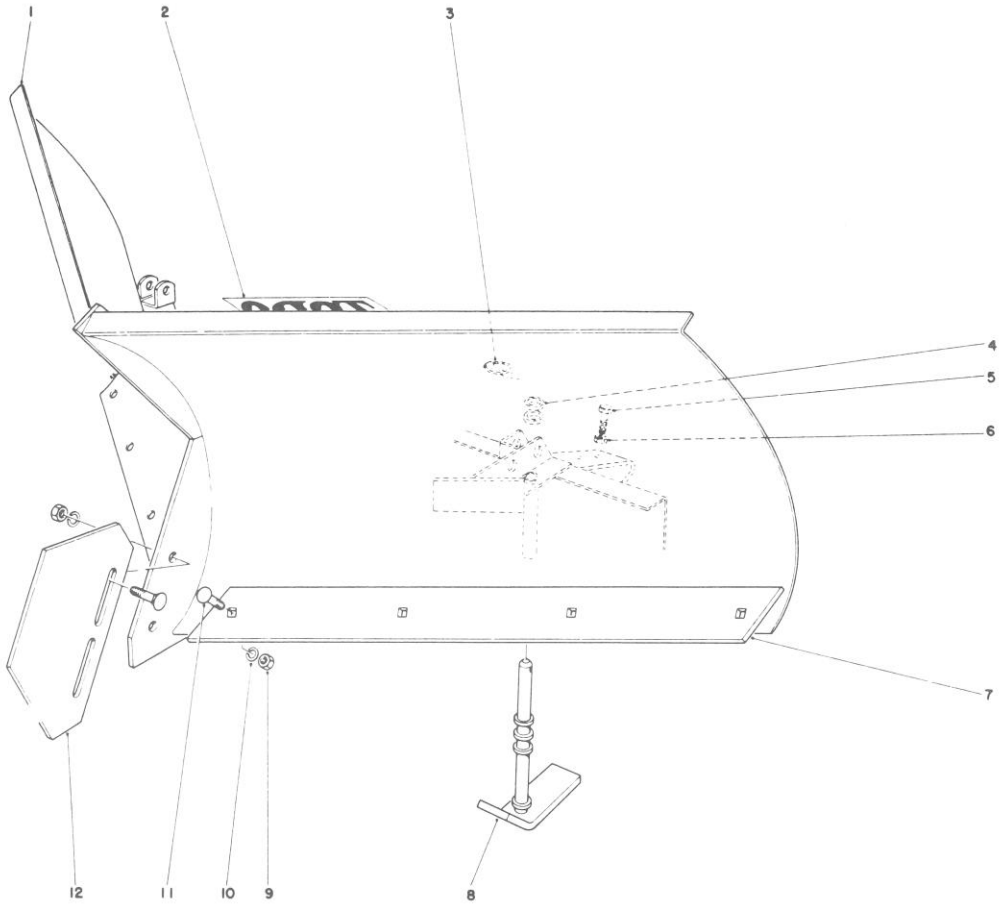

V-PLOW MODEL NO. 30750 (Optional)

Ref. No.	Part No.	Description	No. Used
1	23-9960	V-Plow	1
2	18-2180	Decal	1
3	3290-243	Lynch Pin	2
4	20-4370	Spacer Tubes	10
5	325-6	Capscrew	1
6	3218-5	Jam Nut	1

Ref. No.	Part No.	Description	No. Used
7	24-5570	Scraper Blade	2
8	24-5540	Skid	2
9	3217-9	Nut	10
10	3253-7	Lockwasher	10
11	3233-2	Carriage Bolt	10
12	24-5530	Nose Skid	1

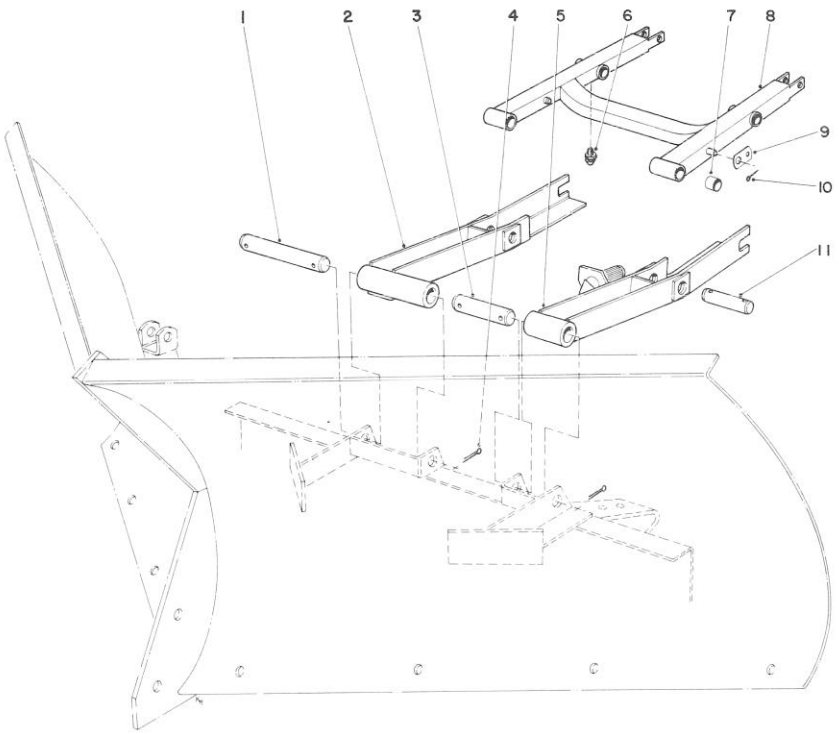

V-PLOW INSTALLATION KIT MODEL NO. 30755 (Optional)

Ref. No.	Part No.	Description	No. Used
1	28-5490	Pin R.H.	1
2	28-5510	Push Arm R.H.	1
3	25-1350	Pin L.H.	1
4	3272-23	Cotter Pin	8
5	28-5500	Push Arm L.H.	1
6	302-53	Grease Fitting	2

Ref. No.	Part No.	Description	No. Used
7	256-101	Bushing	8
8†	27-4270	Lift Arm (Incl. Ref. #6 & 7)	1
9†	27-5270	Strap Brake Spring	2
10†	3272-12	Cotter Pin	2
11	28-6460	Pin	2
*	28-5470	Tire Chains	2

†Parts must be ordered separately for mounting V-Plow on Model No. 30790.

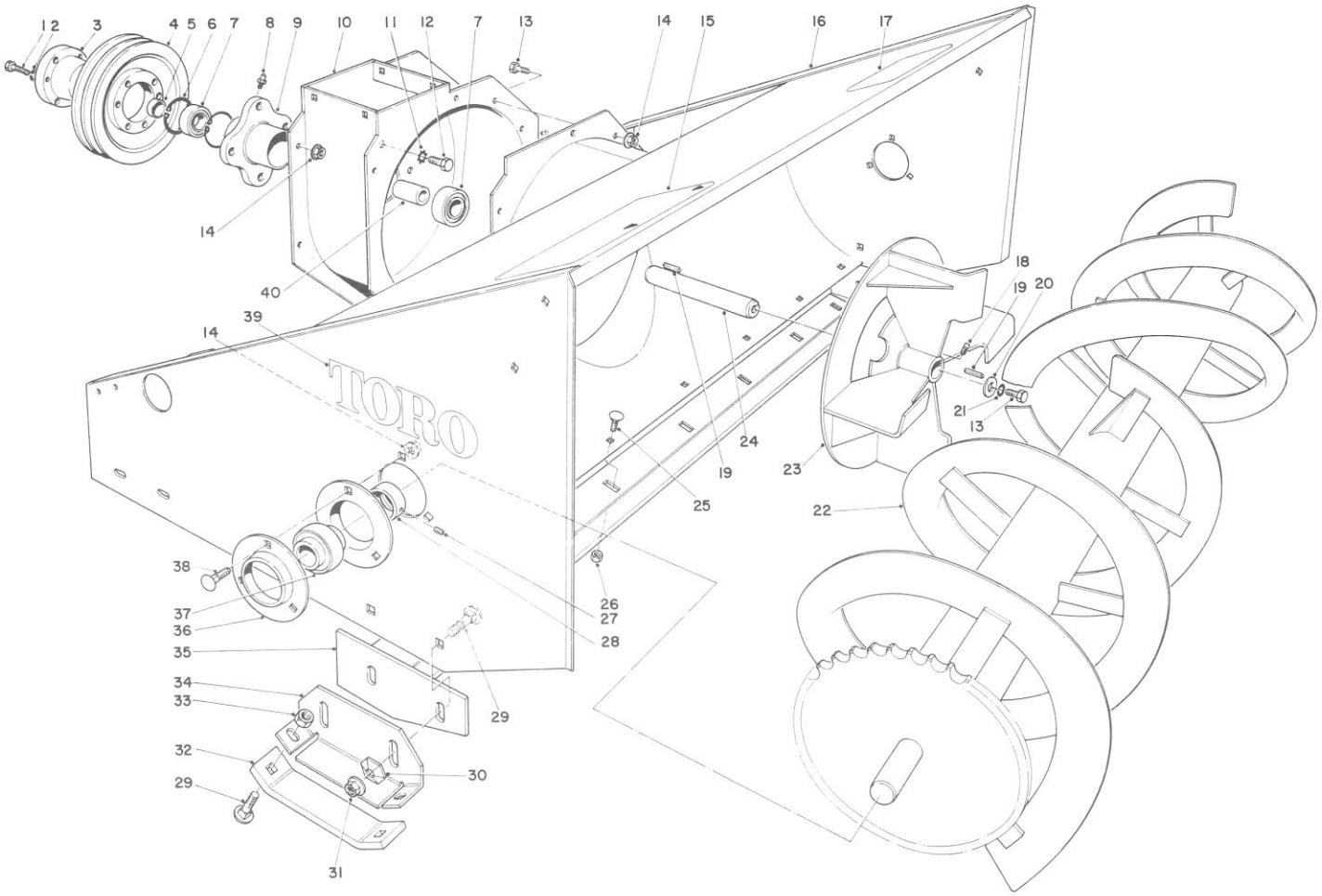

48" SNOWTHROWER MODEL NO. 30570 (Optional)

Ref. No.	Part No.	Description	No. Used
1	321-3	Screw, Cap Hex Hd.	3
2	3253-3	Lockwasher	3
3	46-3650	Hub – "QD" (Incl. Ref. #1 & 2)	1
4	46-3640	Pulley – "QD"	1
5	37-5170	Spacer	1
6	32151-20	Snap Ring	2
7	251-276	Bearing	2
8	302-11	Grease Fitting	1
9	32-4950	Housing Spindle	1
10	39-5030	Blower Housing	1
11	3255-2	Lockwasher	4
12	3213-20	Capscrew	4
13	322-3	Capscrew	9
14	32128-20	Flange Nut	16
15	46-5860	Decal – Rear Weight	1
16	39-5010	Auger Housing	1
17	29-6350	Decal – Warning	1
18	3243-1	Square Head Setscrew	2
19	31-0700	Square Key	2
20	3-6715	Flat Washer	1

Ref. No.	Part No.	Description	No. Used
21	3253-4	Lockwasher	1
22	32-6140	Auger	1
23	32-6130	Impeller	1
24	37-5240	Shaft – Impeller	1
25	3230-19	Carriage Bolt	7
26	3296-47	Locknut	7
27	3245-1	Set Screw	2
28	251-77	Locking Collar	2
29	3231-2	Carriage Bolt	8
30	3290-224	Pyramidal Lockwasher	4
31	32128-18	Flange Nut	4
32	37-5110	Skid – Shoe	2
33	32152-2	Locknut	4
34	37-4950	Skid – Mount Plate	2
35	37-5380	Scraper	1
36	251-287	Flange	4
37	251-253	Bearing (Incl. Ref. #27 & 28)	2
38	3230-18	Carriage Bolt	6
39	27-4600	Decal – Toro	2
40	31-0540	Sleeve	1

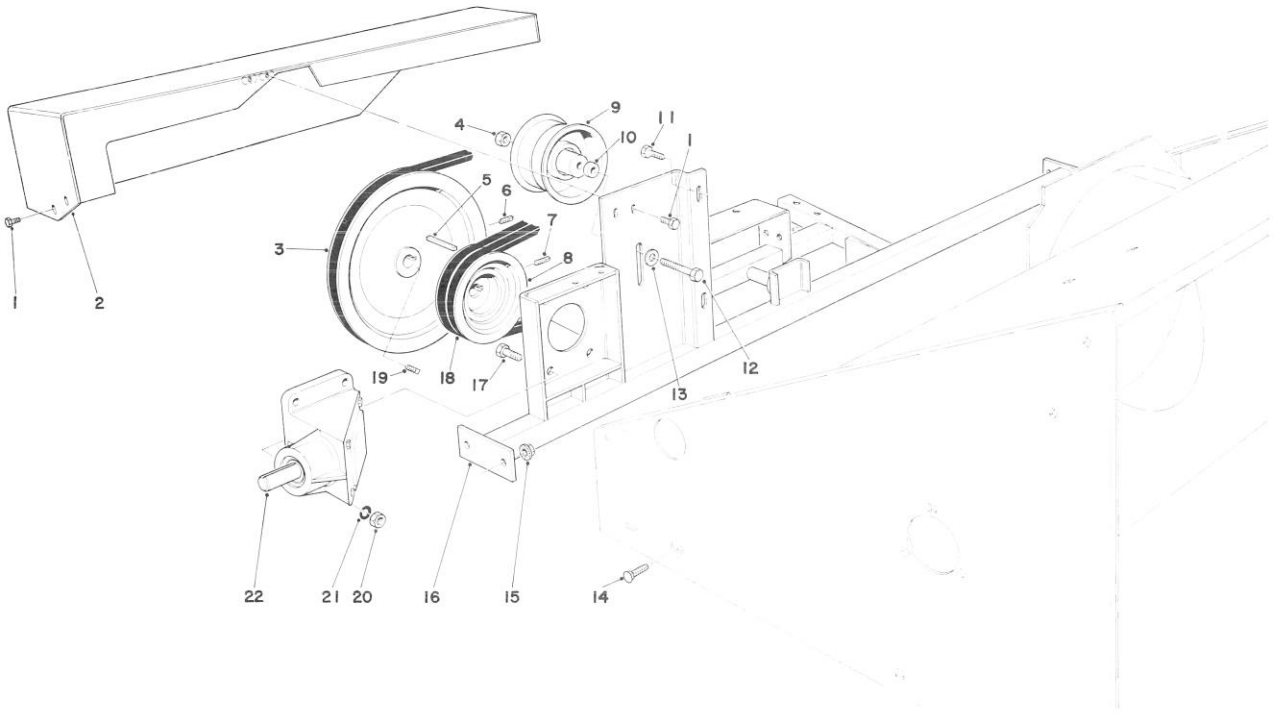

48" SNOWTHROWER MODEL NO. 30570 (Optional)

Ref. No.	Part No.	Description	No. Used
1	3234-13	Flange Screw	4
2	37-5510	Belt Shield	1
3	32-4480	Sheave	1
4	32152-2	Locknut	1
5	3-0971	Key	1
6	3242-2	Sq. Hd. Setscrew	1
7	3242-6	Sq. Hd. Setscrew	2
8	37-5090	Pulley – Gear Box	1
9	37-5760	Idler Pulley	1
10	37-5210	Spacer – Idler	1
11	322-3	Capscrew	2

Ref. No.	Part No.	Description	No. Used
12	323-11	Capscrew	1
13	3256-3	Flatwasher	1
14	3231-30	Carriage Bolt	4
15	3290-357	Hex Locknut	4
16	37-5400	Cross Brace	1
17	323-7	Capscrew	4
18	37-5670	V-Belt (Matched Set of 2)	1
19	3242-4	Sq. Hd. Setscrew	1
20	3217-7	Hexnut	4
21	3253-21	Lockwasher	4
22	37-5410	Gear Box Assembly	1

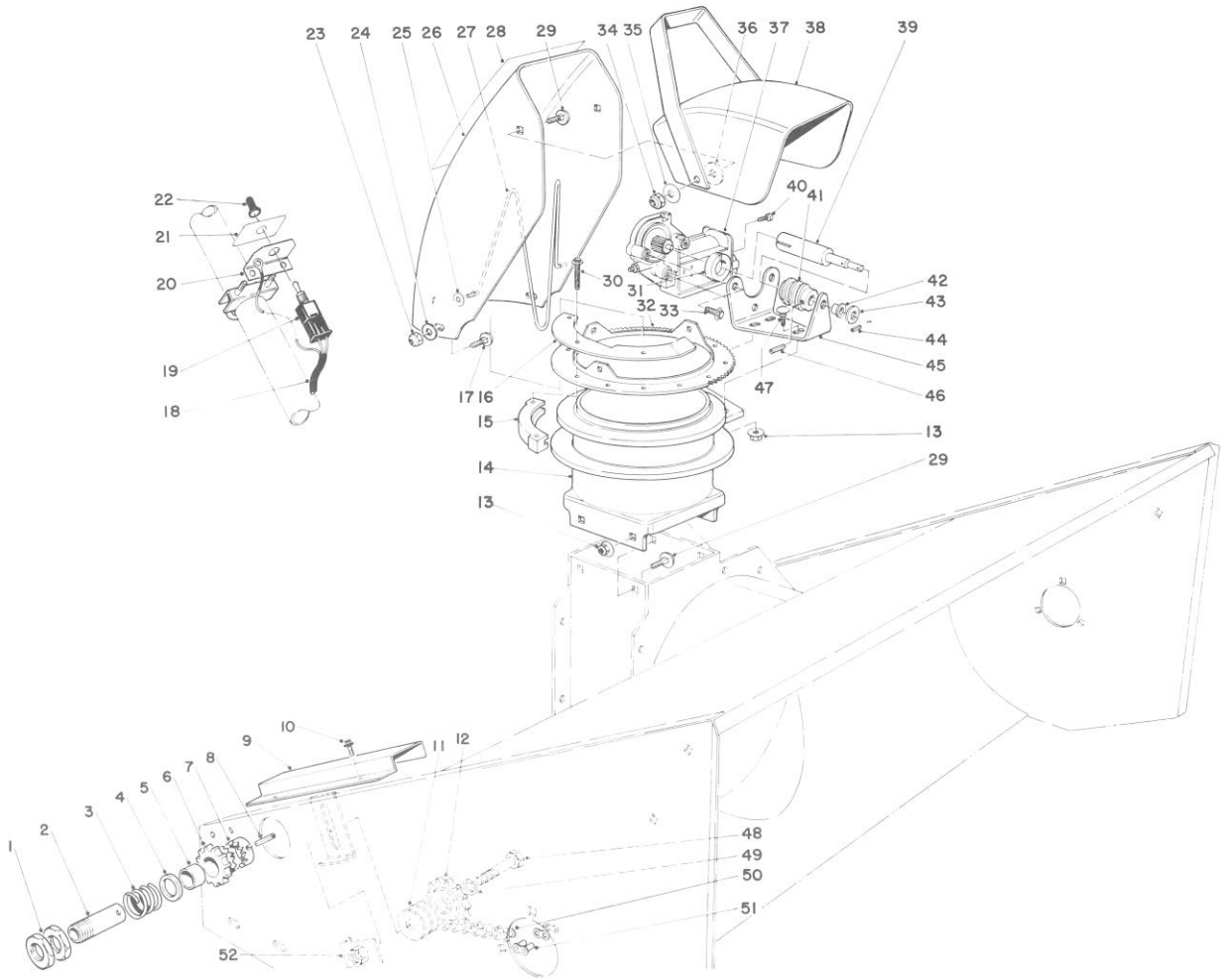

48" SNOWTHROWER MODEL NO. 30570 (Optional)

Ref. No.	Part No.	Description	No. Used
1	37-5720	Nut – Thin	2
2		Clutch Sleeve	1
3		Spring Compression	1
4		Spacer	1
5		Bushing	1
6		Clutch Sprocket	1
7		Clutch Collar	1
8	32121-34	Roll Pin	1
9	32-1620	Chain Cover	1
10	32104-76	Self-Tapping Screw	2
11	3256-7	Flatwasher	3
12	30-0090	Idler Sprocket	1
13	3290-357	Locknut	7
14	39-4870	Chute Transition	1
15	25-5450	Swivel Block	6
16	39-4900	Stop-Chute Rotator	1
17	3230-18	Carriage Bolt	3
18	39-4990	Wire Harness	1
19		Toggle Switch	1
20		Toggle Switch Mount	1
21	39-4970	Decal – Chute Rotation	1
22	218-473	Toggle Switch Boot	1
23	3296-47	Locknut	3
24	3256-23	Flatwasher	3
25	3290-326	Pushnut	2
26	25-5440	Upper Chute	1
27	12-2040	Chute Wire	1
28	29-6350	Decal – Warning	1

Ref. No.	Part No.	Description	No. Used
29	3231-27	Carriage Bolt	6
30	27-0220	Special Screw	12
31	39-4940	Collar	1
32	39-4890	Ring – Chute Swivel	1
33	3234-13	Flange Screw	3
34	32152-2	Locknut	2
35	3290-340	Belleville Washer	2
36	20-4320	Rubber Washer	2
37	39-4920	Gearmotor	1
38	1[illegible]-7120	Deflector	1
39	39-4930	Shaft – Worm Gear	1
40	3274-26	Socket Head Screw	1
41	8-8600	Worm Gear	1
42	256-255	Bushing	1
43	3256-1	Flatwasher	2
44	32121-20	Roll Pin	1
45	39-4910	Motor Mount	1
46	32121-50	Roll Pin	1
47	3231-2	Carriage Bolt	3
48	327-6	Capscrew	1
49	3253-8	Lockwasher	1
50	30-0160	Chain – Roller	1
51	2710-11	Connecting Link	1
52	30-0450	Nut Plate	1
*	37-5640	Slip Clutch (Incl. Ref. #1-8)	1
*	39-4950	Toggle Switch Assembly (Incl. Ref. #19-22)	1

*Not Illustrated

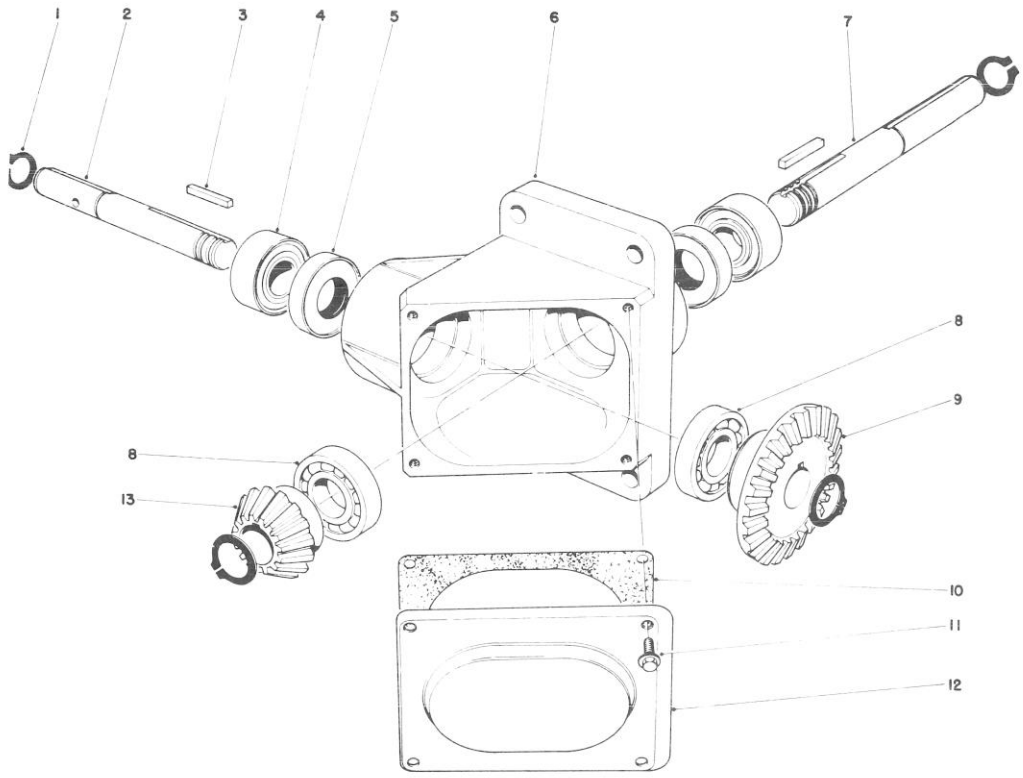

48" SNOWTHROWER MODEL NO. 30570 (Optional)

Ref. No.	Part No.	Description	No. Used
1	32120-72	Retaining Ring	4
2	30-0590	Shaft	1
3	30-0660	Key	2
4	30-0630	Bearing	2
5	30-0640	Oil Seal	2
6	30-0650	Housing	1
7	37-5840	Shaft	1

Ref. No.	Part No.	Description	No. Used
8	30-0620	Bearing	2
9	30-0670	Gear	1
10	30-0680	Gasket – Cover Plate	1
11	12-3270	Screw Special	4
12	30-0690	Cover Plate	1
13	30-0600	Gear	1

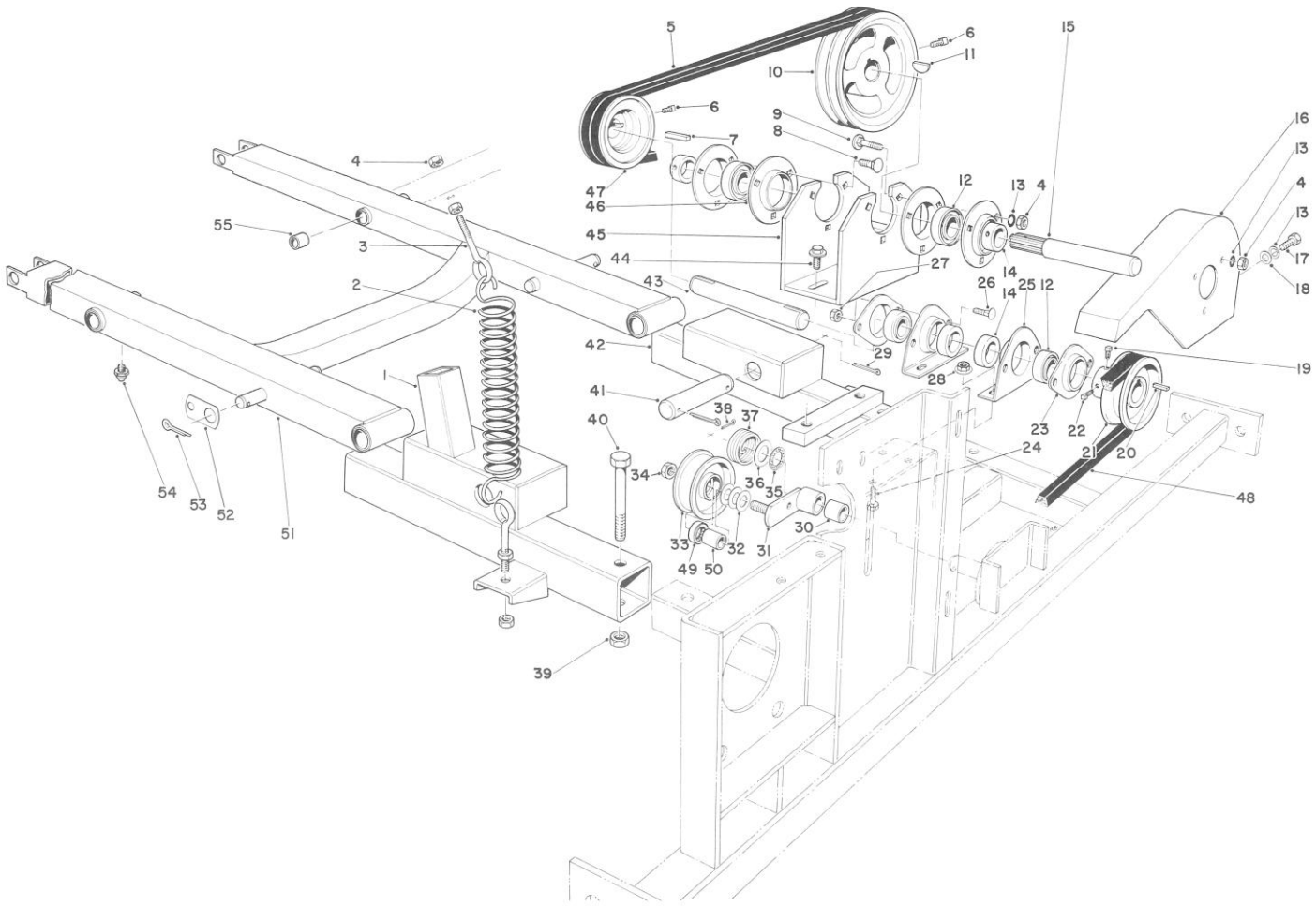

48" SNOWTHROWER ADAPTER KIT MODEL NO. 30572

Ref. No.	Part No.	Description	No. Used
1	37-5600	Adapter R.H.	1
2	30-1020	Spring – Extension	2
3	30-0980	Eye Bolt	4
4	3217-6	Hex Nut	17
5	37-5650	V-Belt (Matched Set)	1
6	3242-6	Square Head Setscrew	4
7	3-3267	Square Key	1
8	3230-16	Carriage Bolt	3
9	3230-4	Carriage Bolt	3
10	37-5340	Pulley	1
11	3257-8	Key – Woodruff	1
12	251-253	Bearing (Incl. Ref. #14)	4
13	3253-24	Lockwasher	11
14	251-77	Collar	4
15	39-4370	Jackshaft	1
16	37-5580	Belt Shield	1
17	322-3	Capscrew	2
18	3256-23	Washer	2
19	3242-1	Square Head Setscrew	1
20	5-7280	Key – Square	1
21	32-1790	Sheave	1
22	3242-2	Square Head Setscrew	1
23	251-285	Flange	2
24	323-4	Capscrew	4
25	251-286	Flange	2
26	3230-1	Carriage Bolt	4
27	32128-20	Nut – Flange	4
28	3290-357	Nut – Flange	4
29	3272-52	Cotter Pin	4
30	31-0680	Bushing Bronze	1

Ref. No.	Part No.	Description	No. Used
31	37-5470	Idler Arm (Incl. Ref. #30)	1
32	3256-27	Washer	3
33	32-1450	Idler Pulley	1
34	30-8670	Locknut	1
35	31-7620	Felt Washer	1
36	31-0210	Washer	1
37	31-9500	Spring – Torsion	1
38	3272-23	Pin – Cotter	1
39	32152-2	Locknut	2
40	323-11	Capscrew	2
41	37-5160	Pin	2
42	37-5620	Adapter L.H.	1
43	37-5250	Jackshaft	1
44	3234-12	Flangescrew	2
45	37-5610	Jackshaft – Support	1
46	251-287	Flange	4
47	37-5070	Pulley	1
48	37-5660	V-Belt	1
49	31-0530	Ball Bearing	1
50	30-5440	Sleeve	1
51†	27-4270	Lift Arm (Incl. Ref. #53 & 54)	1
52†	27-5270	Strap Brake Spring	2
53†	3272-12	Cotter Pin	2
54	302-53	Grease Fitting	2
55	256-101	Bushing	8
*	32-2820	Idler Assembly (Incl. Ref. #33 & 49-50)	1
*	37-5790	Reflector	2
*	32104-42	Self-Tapping Screw	4

*Not Illustrated

†Parts must be ordered separately for mounting 48" Snowthrower on Model No. 30790.

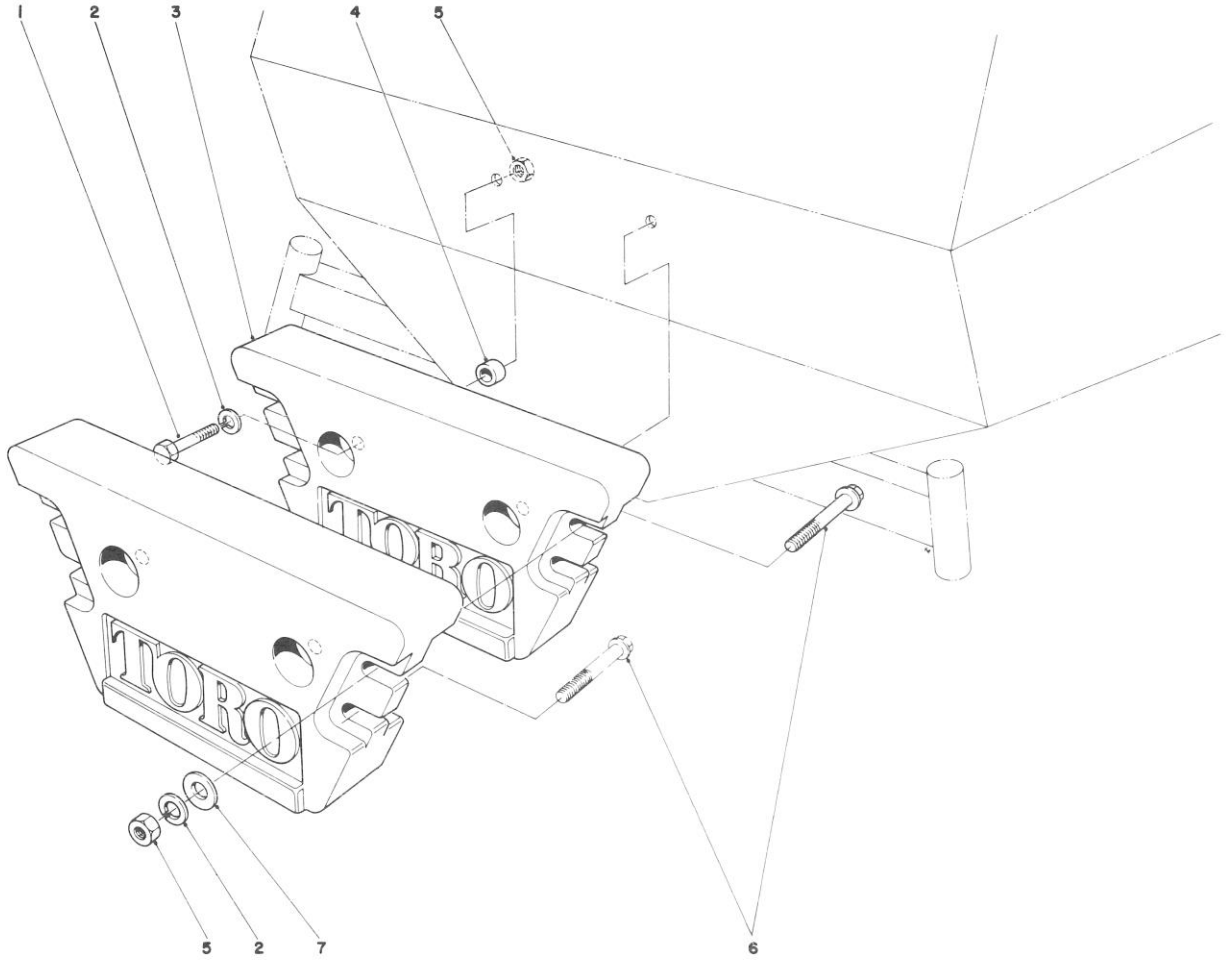

REAR WEIGHT KIT NO. 24-5780 (Optional)

Ref. No.	Part No.	Description	No. Used
1	325-6	Capscrew	2
2	3253-7	Lockwasher	6
3	24-5790	Rear Weight	2
4	3-8847	Spacer	2

Ref. No.	Part No.	Description	No. Used
5	3217-9	Nut	6
6	325-14	Capscrew	4
7	3256-26	Flatwasher	8

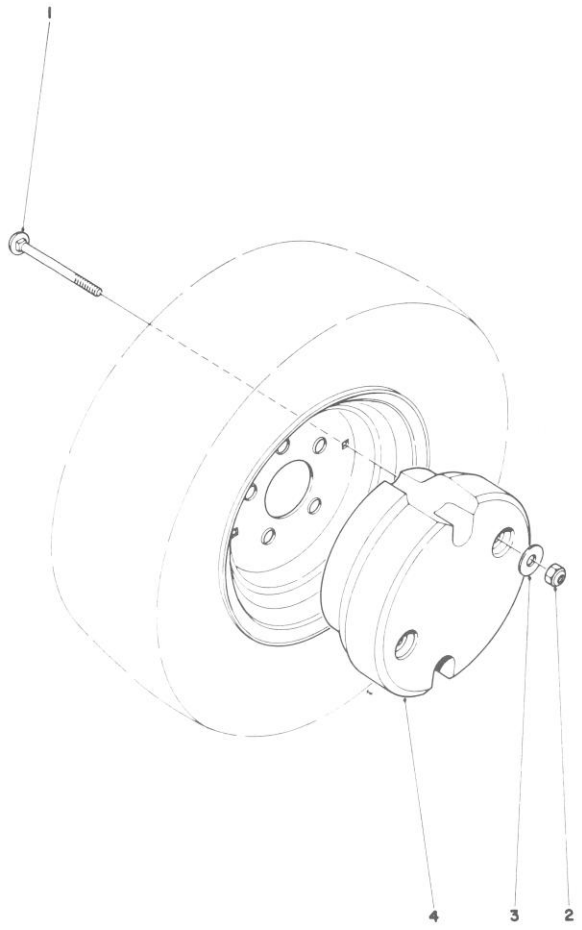

WHEEL WEIGHT KIT MODEL NO. 30762 (Optional)

Ref. No.	Part No.	Description	No. Used
1	3231-24	Carriage Bolt	4
2	3296-26	Nut	4

Ref. No.	Part No.	Description	No. Used
3	3256-24	Washer	4
4†		Wheel Weight	2

†Order Replacement Kit Model No. 30762

ENGINE, ONAN MODEL NO. B48G - GA020 TYPE NO. 4348G
CYLINDER BLOCK AND OIL SYSTEM

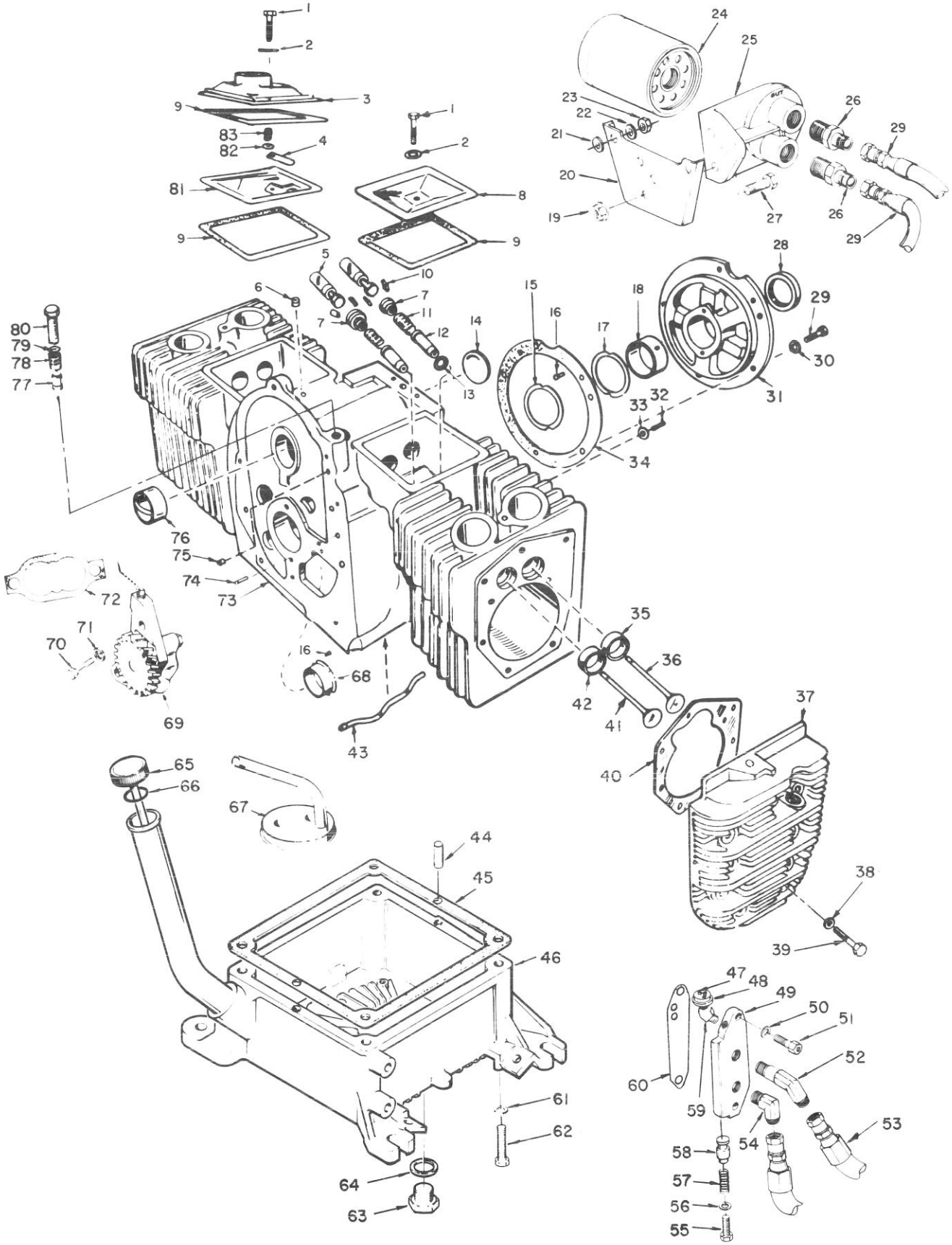

ENGINE, ONAN MODEL NO. B48G - GA020 TYPE NO. 4348G
CYLINDER BLOCK AND OIL SYSTEM

Ref. No.	Part No.	Description	No. Used
1	321-10	Screw – Cap Hex Hd.	2
2	57-9740	Washer, Flat – Copper	2
3	59-0160	Cover – Valve	1
4	57-8560	Reed – Breather Valve	1
5	57-8450	Tappet, Valve (Standard)	4
*	59-0260	Tappet, Valve (.002 Oversize)	4
*	59-0270	Tappet, Valve (.005 Oversize)	4
6	59-0770	Plug, Breather Hole	1
7	57-8270	Roto Cap – Valve	4
8	59-0150	Cover, Valve	1
9	57-8280	Gasket, Valve Cover	3
10	57-8260	Lock, Valve Spring	8
11	57-8250	Spring Valve	4
12	57-8290	Guide, Valve	4
13	57-8240	Gasket, Intake Valve Guide	2
14	57-9690	Plug, Welch – Camshaft Opening	1
15	57-8160	Washer, Thrust	1
16	59-0730	Pin, Drive – Bearing Stop	4
17	57-8170	Shim, Crankshaft End Play (.005)	A/R
18	57-8050	Bearing, Crankshaft Rear Standard (Incl. Ref. #15)	1
*	59-0020	Bearing, Crankshaft Rear .002 Undersize (Incl. Ref. #15)	1
*	57-8060	Bearing, Crankshaft Rear .010 Undersize (Incl. Ref. #15)	1
*	59-0030	Bearing, Crankshaft Rear .020 Undersize (Incl. Ref. #15)	1
*	59-0040	Bearing, Crankshaft Rear .030 Undersize (Incl. Ref. #15)	1
19	59-1150	Nut, Self-Lock	3
20	59-0300	Bracket, Remote Oil Filter	1
21	50-0860	Washer, Over Bracket	2
22	59-0840	Washer, Under Bracket	2
23	3217-7	Nut, Hex	2
24	57-8530	Filter Oil	1
25	57-8540	Base, Remote Oil Filter	1
26	59-0660	Connector, Male	2
27	322-4	Screw, Cap Hex Head	3
28	57-9590	Seal, Oil – Crankshaft Rear	1
29	59-0880	Screw, Cap – Hex Hd.	5
30	3253-5	Washer, Lock – Spring	5
31	57-8040	Plate, Bearing – Rear	1
32	59-0780	Stud	2
33	57-9760	Washer, Flat Copper	2
34	57-8010	Gasket, Bearing Plate	1
35	59-0050	Insert, Valve Seat – Intake (Standard)	2
*	59-0060	Insert, Valve Seat – Intake (.002 Oversize)	2
*	59-0070	Insert, Valve Seat – Intake (.005 Oversize)	2
*	59-0080	Insert, Valve Seat – Intake (.010 Oversize)	2
*	59-0090	Insert, Valve Seat – Intake (.025 Oversize)	2
36	57-8310	Valve, Intake	2
37	59-0180	Head, Cylinder – Right Side	1
*	59-0170	Head, Cylinder – Left Side	1
38	57-9770	Washer, Flat	18
39	59-0890	Screw, Cap – Hex Head (Special) (5/16-18 x 1-5/8")	8
*	59-0900	Screw, Cap – Hex Head (Special) 5/16-18 x 2")	10
40	57-8330	Gasket, Cylinder Head	2
41	57-8300	Valve, Exhaust	2

Ref. No.	Part No.	Description	No. Used
42	59-0100	Insert, Valve Seat – Exhaust (Std.)	2
*	59-0110	Insert, Valve Seat – Exhaust (.002 Oversize)	
*	59-0120	Insert, Valve Seat – Exhaust (.005 Oversize)	2
*	59-0130	Insert, Valve Seat – Exhaust (.010 Oversize)	2
*	59-0140	Insert, Valve Seat – Exhaust (.025 Oversize)	2
43	59-0290	Tube, Oil – Cylinder Block	1
44	57-9680	Pin Dowel – Oil Base	2
45	57-8090	Gasket, Oil Base	1
46	57-8100	Base, Oil	1
47	59-0600	Lead, Low Oil Pressure Cut Off	1
48	57-9490	Switch, Low Oil Pressure Cut Off	1
49	57-8510	Adapter, Oil Filter	1
50	57-9750	Washer, Flat Copper	2
51	59-0930	Screw, Cap – Socket Head	2
52	59-0680	Elbow, Male (To Filter)	1
53	57-9520	Hose, Oil	2
54	59-0670	Elbow, Male (From Filter)	1
55	3211-1	Screw, Cap Hex Hd.	1
56	57-9760	Washer, Flat	1
57	57-8500	Spring, By-Pass	1
58	57-8470	Valve, By-Pass Plunger	1
59	59-0640	Elbow, Street 45°	1
60	57-8520	Gasket, Oil Filter Adapter	1
61	3253-5	Washer, Lock-Spring	4
62	323-42	Screw, Cap – Hex Head	4
63	57-8080	Plug, Oil Drain	1
64	57-8070	Gasket, Oil Drain	1
65	57-8570	Cap and Indicator, Oil Fill	1
66	57-9610	O-Ring, Oil Fill Cap	1
67	57-8490	Cup, Intake – Oil Pump	1
68	57-8020	Bearing, Crankshaft – Front (Flanged) Standard	1
*	57-9360	Bearing, Crankshaft – Front (Flanged .002 Undersize	1
*	57-8030	Bearing, Crankshaft – Front (Flanged) .010 Undersize	1
*	57-9800	Bearing, Crankshaft – Front (Flanged) .020 Undersize	1
*	59-0010	Bearing, Crankshaft – Front (Flanged) .003 Undersize	1
69	57-8480	Pump, Oil	1
70	321-6	Screw, Cap – Hex Hd.	2
71	3253-3	Washer, Lock Spring	2
72	57-8460	Gasket Kit, Oil Pump	1
73	59-1190	Block Assy. (Incl. Ref. #6, 12-18, 29-31, 34-35, 42-43, 68, 74 & 76)	1
74	59-0750	Pin, Gear Cover Alignment	2
75	59-0760	Plug, Core Hole	1
76	57-8000	Bearing, Camshaft	2
77	57-8470	Plunger, Bypass Valve	1
78	59-0280	Spring, Bypass Valve	1
79	57-9760	Washer, Flat – Copper	1
80	59-0910	Screw, Cap – Hex Head	1
81	59-0310	Baffle, Breather Valve	1
82	59-0820	Washer, Flat	1
83	57-8550	Spring, Breather Valve	1
*	57-8320	Short Block	1
*	57-9370	Gasket Kit, Valve Grind	1
*	57-9380	Gasket Kit, Complete Engine	1

*Not Illustrated

ENGINE, ONAN MODEL NO. B48G - GA020 TYPE NO. 4348G

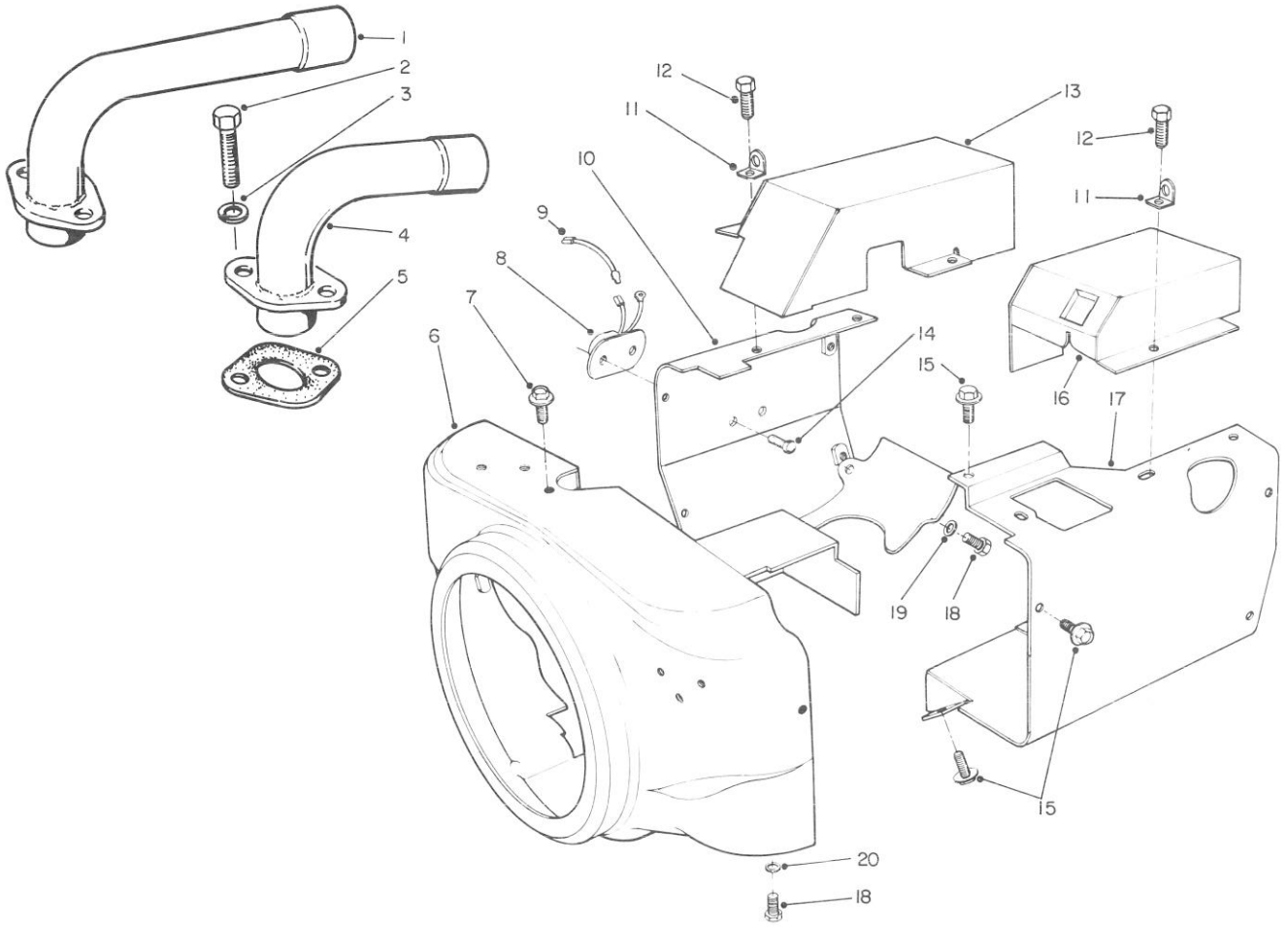

ENGINE AIR HOUSING

Ref. No.	Part No.	Description	No. Used
1	57-9240	Adapter, Exhaust – Left	1
2	322-3	Screw, Cap – Hex Hd.	4
3	3253-4	Washer, Lock – Spring	4
4	57-9230	Adapter, Exhaust – Right	1
5	57-9210	Gasket, Exhaust	2
6	57-8700	Housing, Blower	1
7	59-0970	Screw, Cap – Hex. Hd.	1
8	57-9500	Switch, High Air Temp. Cut Off	1
9	59-0620	Lead	1
10	57-8680	Housing, Cylinder Air – Left Side	1

Ref. No.	Part No.	Description	No. Used
11	59-0630	Bracket, Lifting	2
12	32104-32	Screw, Tapping – Hex Hd.	2
13	57-8640	Cover, Exhaust – Left	1
14	57-9780	Rivet, High Air Temp. Cut Off	2
15	59-1080	Screw, Cup Hex Washer Hd.	5
16	57-8710	Cover, Exhaust – Right	1
17	57-8690	Housing, Cylinder Air – Right Side	1
18	59-0980	Screw, Cap – Hex Hd.	4
19	59-0830	Washer, Flat	2
20	59-0820	Washer, Flat	2

ENGINE, ONAN MODEL NO. B48G - GA020 TYPE NO. 4348G

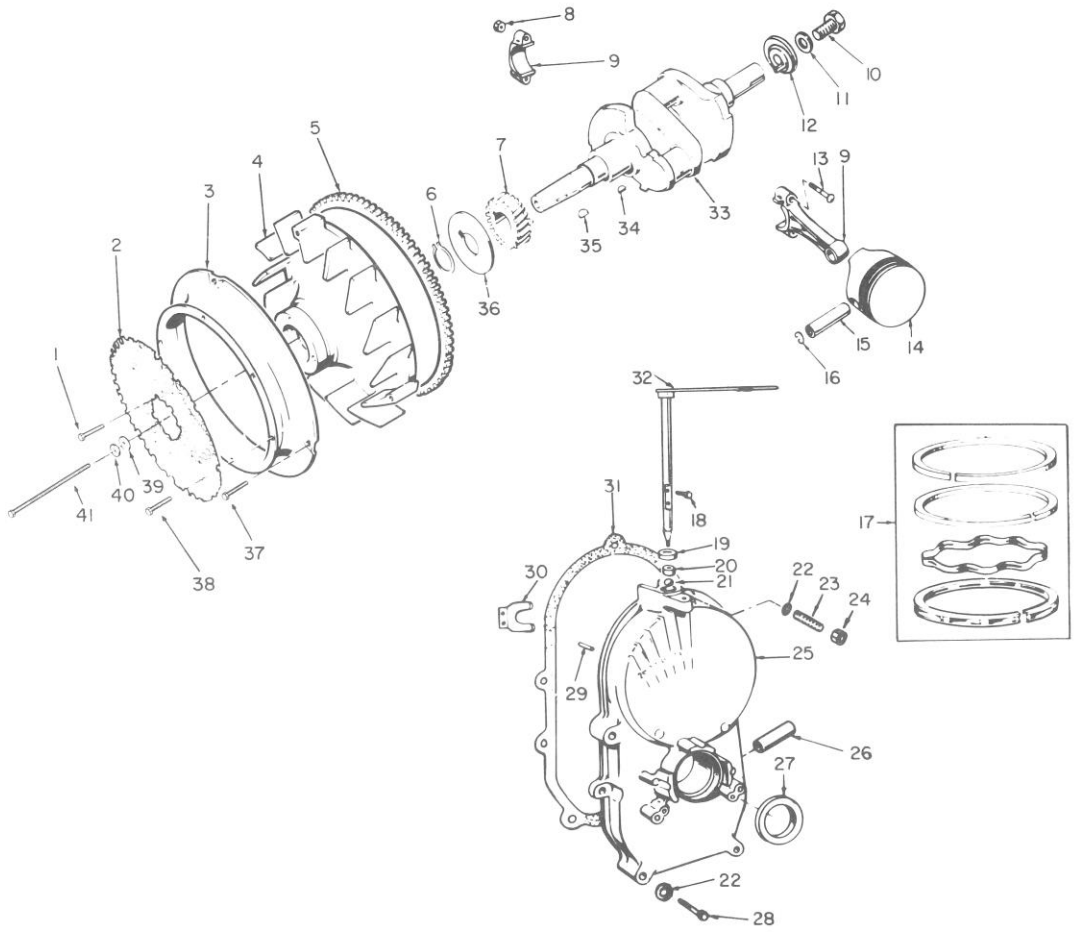

CRANKSHAFT AND FLYWHEEL

Ref. No.	Part No.	Description	No. Used
1	59-1120	Screw, Cap – Hex Head Locking	4
2	57-8650	Guard, Flywheel	1
3	57-8610	Venture, Blower Wheel	1
4	57-8630	Flywheel (Incl. Ref. #5)	1
5	57-8180	Gear, Ring	1
6	57-9710	Ring, Retaining	1
7	57-8130	Gear, Crankshaft	1
8	57-9790	Nut, Hex – Crown Lock	4
9	57-8420	Rod, Connecting – Standard (Incl. Ref. #8 & 13)	2
*	57-8430	Rod, Connecting (.010 Undersize) (Incl. Ref. #8 &13)	2
*	57-8440	Rod, Connecting (.020 Undersize) (Incl. Ref.#8 &13)	2
*	59-0250	Rod, Connecting (.030 Undersize) (Incl. Ref.#8 &13)	2
10	59-1160	Screw, Cap Hex Hd.	1
11	3253-5	Washer, Lock-Spring	1
12	57-8190	Weight, Balance	1
13	57-8410	Bolt, Special – Connecting Rod	4

Ref. No.	Part No.	Description	No. Used
14	57-8350	Piston & Pin – Standard (Incl. Ref. #15 & 16)	2
*	59-0190	Piston & Pin (.005 Oversize) (Incl. Ref. #15 & 16)	2
*	57-8360	Piston & Pin (.010 Oversize) (Incl. Ref. #15 & 16)	2
*	57-8370	Piston & Pin (.020 Oversize) (Incl. Ref. #15 & 16)	2
*	59-0200	Piston & Pin (.030 Oversize) (Incl. Ref. #15 & 16)	2
*	59-0210	Piston & Pin (.040 Oversize) (Incl. Ref. #15 & 16)	2
15	57-8340	Pin, Piston	2
16	57-9720	Ring, Retaining	4
17	57-8380	Ring Set, Piston – Standard	2
*	59-0220	Ring Set, Piston (.005 Oversize)	2
*	57-8390	Ring Set, Piston (.010 Oversize)	2
*	57-8400	Ring Set, Piston (.020 Oversize)	2
*	59-0230	Ring Set, Piston (.030 Oversize)	2
*	59-0240	Ring Set, Piston (.040 Oversize)	2
18	59-0950	Screw, Machine – Pan Hd.	2
19	57-9630	Ball, Bearing – Governor Shaft	1

*Not Illustrated

ENGINE, ONAN MODEL NO. B48G - GA020 TYPE NO. 4348G

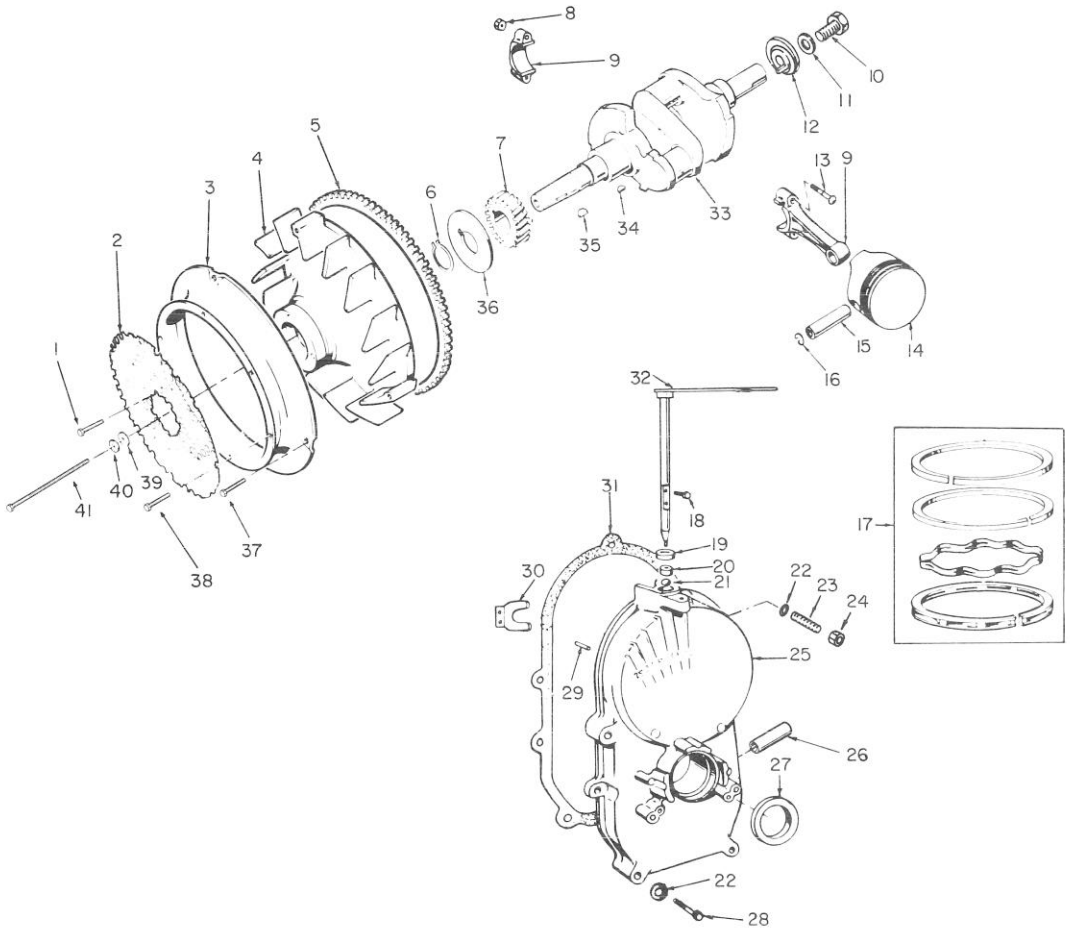

CRANKSHAFT AND FLYWHEEL (Continued)

Ref. No.	Part No.	Description	No. Used
20	57-9650	Bearing, Governor Shaft	1
21	57-9570	Seal, Oil – Governor Shaft	1
22	57-9750	Washer, Flat – Copper	5
23	59-0790	Stud, Gear Cover – Top Hole	1
24	59-1130	Nut, Gear Cover Top Hole	1
25	57-8120	Gear Case Assembly (Incl. Ref. #18-21, 23-24, 27-28 & 30)	1
26	59-0360	Tube, Vacuum Port	1
27	57-9580	Seal, Oil – Crankshaft	1
28	322-9	Screw, Cap Hex Hd.	4
29	59-0740	Pin, Dowel – Governor Cup Stop	1

Ref. No.	Part No.	Description	No. Used
30	59-0420	Yoke, Governor Shaft	1
31	57-8110	Gasket, Gearcase Mounting	1
32	59-0440	Shaft and Arm, Governor	1
33	57-8200	Crankshaft	1
34	57-9660	Key, Crankshaft Gear	1
35	57-9670	Key, Flywheel	1
36	57-8140	Washer, Gear Retaining	1
37	59-1100	Screw, Cap Hex Washer Hd.	5
38	59-1040	Screw, Tapping Hex Washer Hd.	6
39	59-0810	Washer, Flat	1
40	3253-6	Washer, Lock – Spring	1
41	57-8150	Screw, Cap – Hex Head	1

ENGINE, ONAN MODEL NO. B48G - GA020 TYPE NO. 4348G

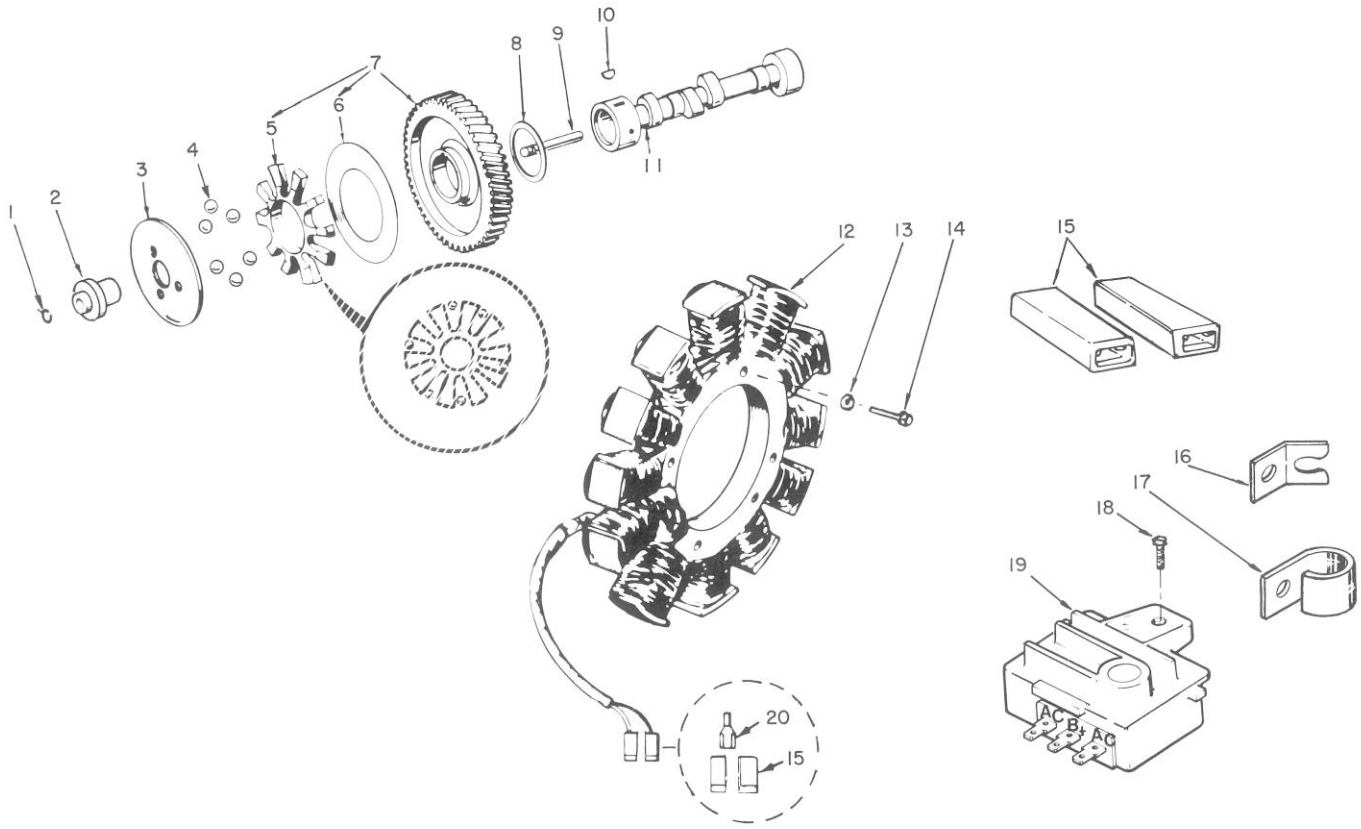

CAMSHAFT AND FLYWHEEL ALTERNATOR

Ref. No.	Part No.	Description	No. Used
1	57-9090	Ring, Retaining	1
2	57-9130	Hub, Governor Cup	1
3	59-0450	Cup, Governor	1
4	57-9640	Ball, Governor	6
5	57-9110	Spacer, Flyball	1
6	59-0410	Plate, Flyball	1
7	57-8210	Gear, Camshaft (Incl. Ref. #5 & 6)	1
8	57-8230	Washer, Thrust	1
9	59-0400	Pin, Center	1
10	57-9660	Key, Woodruff—Camshaft Gear	1

Ref. No.	Part No.	Description	No. Used
11	57-8220	Camshaft (Incl. Ref. #9)	1
12	57-9440	Stator (Incl. Ref. #15 & 20)	1
13	3253-2	Washer – Lock, Spring	3
14	3258-53	Screw – Machine, Round Hd.	3
15	59-0570	Body, Terminal Connector (AC Terminals)	2
16	59-0520	Bracket, Alternator Lead	1
17	59-0580	Clamp, Wire – Alternator Leads	1
18	59-1070	Screw – Cap Hex Washer Hd.	1
19	57-9430	Regulator Voltage	1
20	59-0590	Terminal, Stator Leads	2

ENGINE, ONAN MODEL NO. B48G - GA020 TYPE NO. 4348G

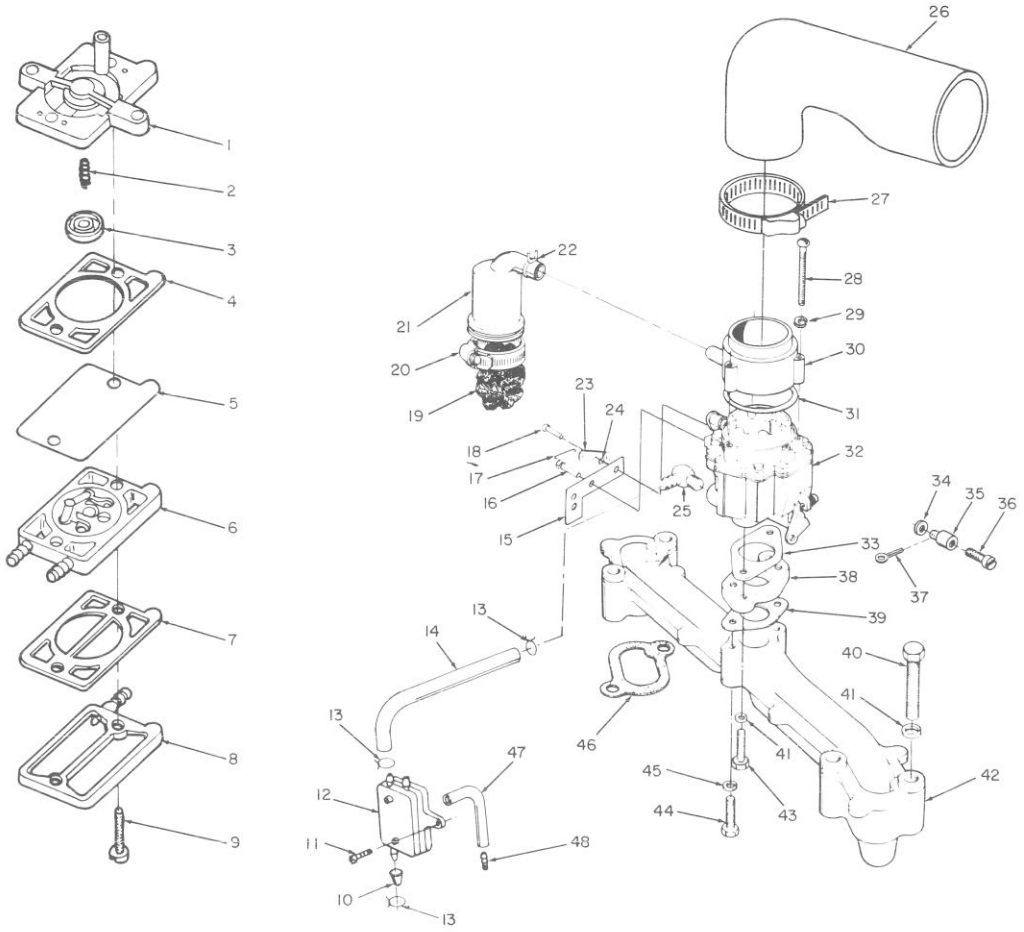

FUEL SYSTEM

Ref. No.	Part No.	Description	No. Used
1	59-0380	Base, Pump	1
2	57-8750	Spring, Fuel Pump	1
3	57-8760	Plate, Drive – Fuel Pump	1
4	57-8740	Gasket – Pump Cover	1
5	57-8770	Diaphragm – Fuel Pump	1
6	57-8780	Valve Assembly, Reed – Fuel Pump (Includes Cap & Clamp)	1
7	57-9070	Gasket – Cover to Valve Assy.	1
8	59-0390	Cover – Pump	1
9	57-8730	Screw – Pump Cover to Body	2
10	59-0370	Cap, Fuel Outlet	1
11	59-1050	Screw, Tapping Pan Hd.	2
12	57-9080	Pump, Fuel – Vacuum Pluse (Incl. Ref. #1-9)	1
13	57-9550	Clamp, Hose	3
14	59-0710	Hose, Fuel (13")	1
15	59-0470	Bracket, Cable Choke	1
16	59-1060	Screw, Cap Hex Washer Hd.	1
17	57-9180	Link, Choke	1
18	59-1020	Screw, Shoulder	1
19	57-8580	Filter, Breather Tube	1
20	57-9530	Clamp, Breather Tube	1
21	57-8590	Tube, Crankcase Breather	1
22	57-9540	Clamp, Hose	1
23	59-0460	Swivel, Choke	1
24	3254-1	Washer, Lock Internal Tooth	1

Ref. No.	Part No.	Description	No. Used
25	59-0650	Elbow – Hose	1
26	57-8800	Elbow, Air Inlet	1
27	59-0690	Clamp, Hose	1
28	59-0940	Screw – Machine Round Hd.	3
29	3253-2	Washer – Lock	3
30	57-8720	Adapter, Air Cleaner	1
31	57-9620	Seal, O-Ring	1
32	57-9040	Carburetor, Complete (Incl. Ref. #33)	1
33	57-9200	Gasket, Carburetor to Adapter	1
34	59-0850	Washer	1
35	57-9170	Swivel	1
36	59-0960	Screw	1
37	59-0720	Cotter Pin	1
38	59-0480	Adapter, Carburetor	1
39	57-8790	Gasket, Adapter to Manifold	1
40	322-10	Screw, Cap – Hex Head	4
41	3253-4	Washer, Lock-Spring	6
42	57-9250	Manifold, Intake	1
43	322-4	Screw, Cap – Hex Hd.	2
44	321-13	Screw, Cap – Hex Hd.	2
45	3253-3	Washer, Lock – Spring	2
46	57-9220	Gasket, Manifold to Block	2
47	59-0700	Hose, Fuel Pump Vacuum	1
48†	59-0360	Tube, Vacuum Port	1

†Part included in 57-8120 Gear Case Assembly

ENGINE, ONAN MODEL NO. B48G - GA020 TYPE NO. 4348G

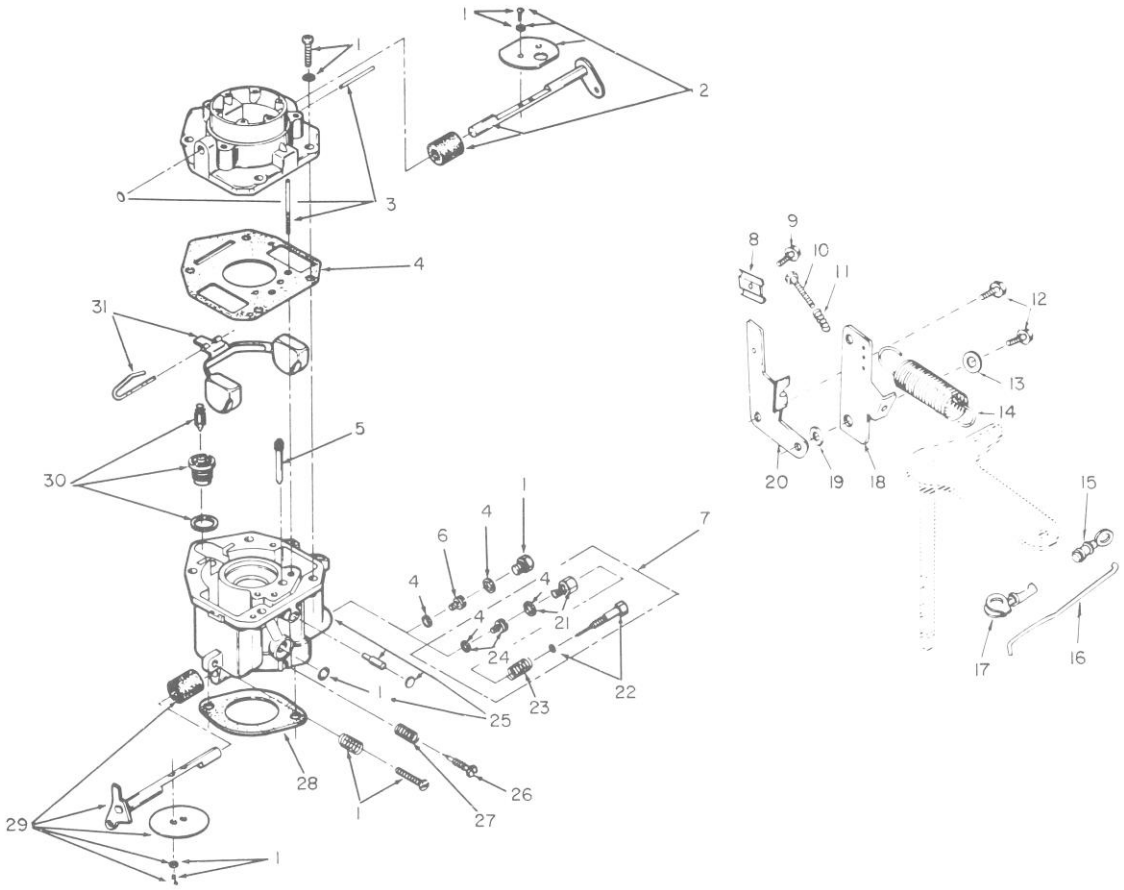

CARBURETOR AND GOVERNOR CONTROL—VARIABLE SPEED (Side Pull)

Ref. No.	Part No.	Description	No. Used
1	57-8910	Screw and Plug Kit	1
2	57-9030	Choke, Shaft Kit	1
3†		Intake, Air	1
4	57-8940	Gasket Kit	1
5	62-2820	Jet, Idle	1
6	57-9050	Jet, Power	1
7	57-8950	Variable Speed Jet Kit — Optional (High Altitude Application)	1
8	57-9190	Clamp, Cable	1
9	59-1000	Screw, Tapping Hex. Hd.	1
10	59-1030	Screw, Tapping Hex. Hd.	1
11	59-0430	Spring Idle Setting	1
12	59-1010	Screw — Cap Hex Washer Hd.	2
13	59-0870	Washer, Flat	1
14	57-9100	Spring, Governor	1
15	57-9700	Clip, Retaining — Control Rod	1
16	57-9160	Rod, Governor Control	1
17	57-9730	Clip, Retaining — Control Rod	1

Ref. No.	Part No.	Description	No. Used
18	57-9140	Arm-Governor Control	1
19	57-9120	Bushing Control Arm	1
20	57-9150	Bracket Cable	1
21	59-0320	Retainer, Power Needle (Incl. Gasket)	1
22	59-0340	Needle Complete Power	1
23	59-0330	Spring, Power Needle	1
24	59-0350	PowerJet, Variable (Incl. Gasket)	1
25†		Body	1
26	57-8990	Needle, Idle Adjusting	1
27	57-8970	Spring, Idle Adjusting Needle	1
28	57-9200	Gasket, Carburetor Mounting	1
29	57-9060	Throttle Shaft Kit	1
30	57-8960	Valve & Seat Kit	1
31	62-2800	Float Kit	1
*	57-9040	Carburetor, Complete (Incl. Mounting Gasket)	1
*	57-9020	Carburetor Kit	1
*	62-2810	Repair Kit	1

*Not Illustrated
†Not Sold Separately

ENGINE, ONAN MODEL NO. B48G - GA020 TYPE NO. 4348G

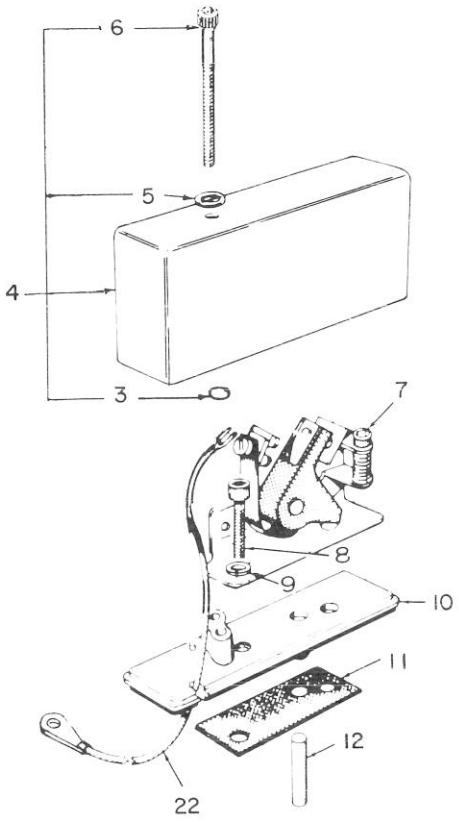

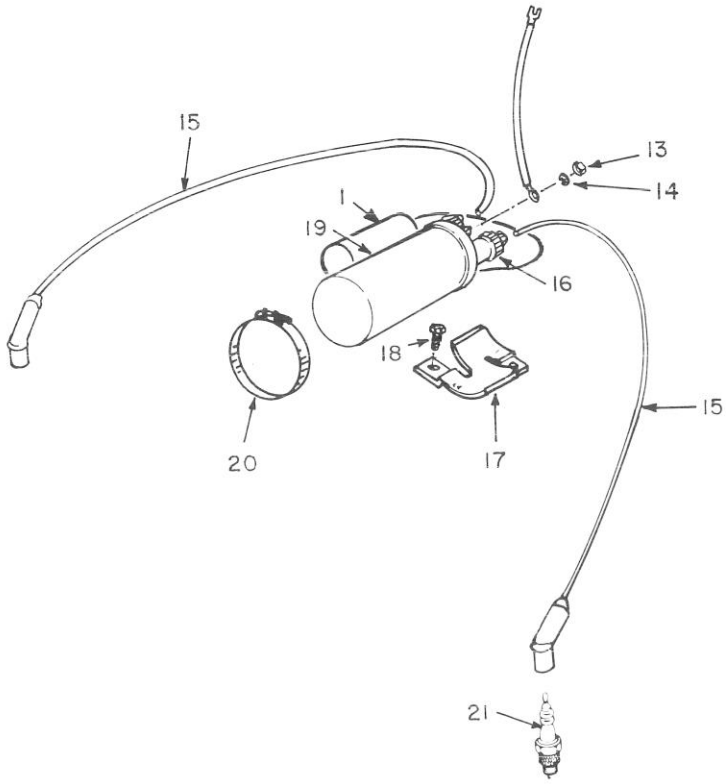

IGNITION SYSTEM

Ref. No.	Part No.	Description	No. Used
1	59-1180	Condenser	1
3	57-9600	Retainer ("O" Ring)	1
4	59-0500	Cover, Breaker Box	1
5	59-0800	Flat Washer	1
6	3274-59	Screw, Cap-Hex Socket	1
7	57-9280	Point Set Breaker	1
8	59-0920	Cap Screw Socket Hd.	2
9	3253-3	Lockwasher	2
10	59-0490	Base Breaker	1
11	57-9260	Gasket, Breaker Box	1
12	57-9270	Plunger, Breaker Points	1
13	57-9320	Nut — Hex, Special	1

Ref. No.	Part No.	Description	No. Used
14	59-1140	Washer, Lock — Spring	1
15	57-9350	Cable — Spark Plug	2
16	57-9330	Cap Coil Terminal	2
17	59-0510	Bracket Ignition Coil	1
18	59-1090	Screw, Cap Hex Washer Hd.	1
19	57-9310	Coil, Ignition	1
20	57-9560	Clamp, Ignition Coil	1
21	57-9340	Plug, Spark	2
22	59-0610	Lead — Breaker Box to Coil	1
*	57-9290	Breaker Box (Incl. Ref. #1-11)	1
*	57-9300	Ignition Kit	1

*Not Illustrated

ENGINE, ONAN MODEL NO. B48G - GA020 TYPE NO. 4348G

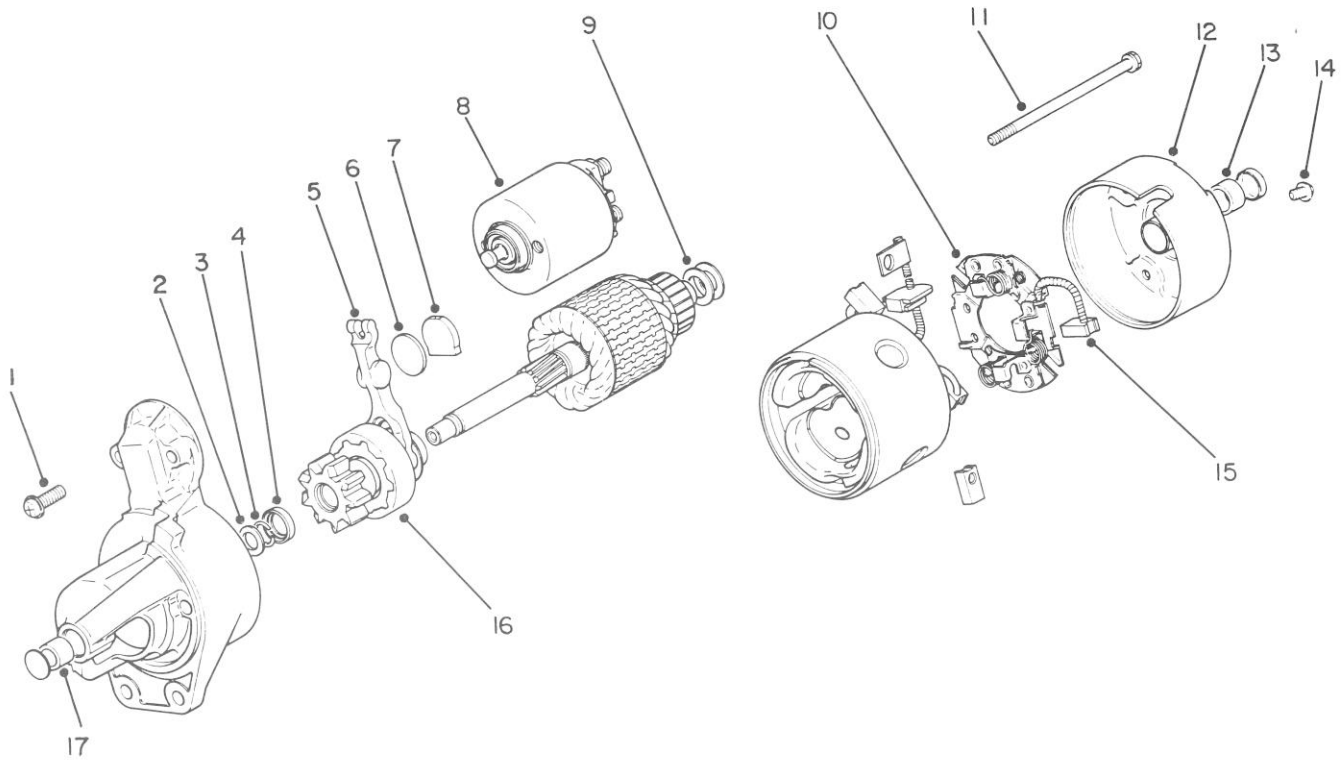

STARTER MOTOR

Ref. No.	Part No.	Description	No. Used
1†		Screw — Solenoid	2
2†		Washer	1
3†		Ring — Pinion Retainer	1
4†		Collar — Pinion Stop	1
5†		Lever — Shift	1
6†		Plate — Wear	1
7†		Plug — Rubber	1
*	62-2770	Starter Shift Lever Kit (Incl. Ref. #5-7)	1
8	62-2720	Starter Solenoid Kit	1
9†		Shim — Armature	2
10	62-2750	Starter Brush Holder Assy.	1
11†		Bolt	2

Ref. No.	Part No.	Description	No. Used
12†		Cap Assembly	1
13†		Bushing	1
*	62-2730	Bushing Kit (Incl. Ref. #12, 13 & 17)	1
14†		Screw — Brush Holder	2
*	62-2760	Hardware Kit (Incl. Ref. #1-4, 9, 11 & 14)	1
15†		Brush — Positive	2
*	62-2740	Starter Brush Kit (Incl. Ref. #15)	1
16†		Starter Clutch Assembly	1
17†		Bushing	1

*Not Illustrated
†Not Sold Separately

PRODUCT CHANGES

In an effort to make improvements available to TORO owners as quickly as possible, minor changes are incorporated into Toro's products from time to time that do not become immediately shown in the Parts Catalog. If such a change apparently has been made in your unit, which is not reflected in your manual, see your TORO Distributor for information and part numbers.

IDENTIFICATION AND ORDERING

Model and Serial Numbers

The Groundsmaster 220 has two identification numbers: a model number and a serial number. The two numbers are stamped on a plate which is located on the right hand side seat cover support. In any correspondence concerning the Groundsmaster 220, supply model and serial numbers to assure that correct information and replacement parts are obtained.

To order replacement parts from an Authorized TORO Distributor, supply the following information.

1. Model and serial number of the Groundsmaster 220.
2. Part number, description, and quantity of part(s) desired.

NOTE: Do not order by reference number if a parts catalog is being used; use the PART NUMBER.

INDEX

Description	Page
Hood Assembly	1
Pedals & Steering Wheel Assembly	2
Steering Gear Assembly No. 41-8820	3
Traction Pedal Assembly	4
Seat Mount & Air Cleaner Assembly	5
Instrument Panel and Steering Post Assembly	6-7
Electrical Schematic	8
Engine Assembly	9
Rear Axle Assembly	10
Gas Tank & Axle Assembly	11
Power Take Off Lever Assembly	12
Power Take Off Assembly	13
Transmission & Drive Coupling Assembly	14
Transmission Interlock Assembly	15
Transmission Assembly 49-7910	16
Hydraulic Valve & Lift Arm Cylinders	17
Valve and Lever Assembly	18
Valve Assembly No. 43-1700	19
Hydraulic Cylinder No. 43-5260	20
Differential Assembly	21-22
Brake Assembly	23
Cutting Unit Model No. 30562	24-27
Rear Weight (62" Cutting Unit)	28
Gear Box, Cutting Unit Model 30562, 30555, 30568 & 30575	29
Cutting Unit Model No. 30555	30-32
Cutting Unit Model No. 30568	33-35
Cutting Unit Model No. 30575	36-39
Engine Shield Kit Model 30563	40
Mulcher Kit Model No. 30792 (Optional)	41
Mulcher Kit Model No. 30700 (Optional)	42
Pneumatic Caster Wheel Assembly (Optional)	43
Standard Seat Kit Model No. 30764	44
Deluxe Seat Kit Model No. 30786	45-47
Grass Collector Model No. 30558 (Optional)	48-52
V-Plow Model No. 30750 (Optional)	53
V-Plow Installation Kit Model No. 30755 (Optional)	54
48" Snowthrower Model No. 30570 (Optional)	55-58
48" Snowthrower Adapter Kit Model No. 30572 (Optional)	59
Rear Weight Kit No. 24-5780 (Optional)	60
Wheel Weight Kit No. 30762 (Optional)	61
Cylinder Block & Oil System	62-63
Engine Air Housing	64
Crankshaft & Flywheel	65-66
Camshaft & Flywheel Alternator	67
Fuel System	68
Carburetor & Governor Control — Variable Speed (Side Pull)	69
Ignition System	70
Starter Motor	71