FORM NO. 3312-978

TORO®

MODEL NO. 38185-7000001 & UP

PARTS CATALOG

CCR-2000 SNOWTHROWER ELECTRIC START

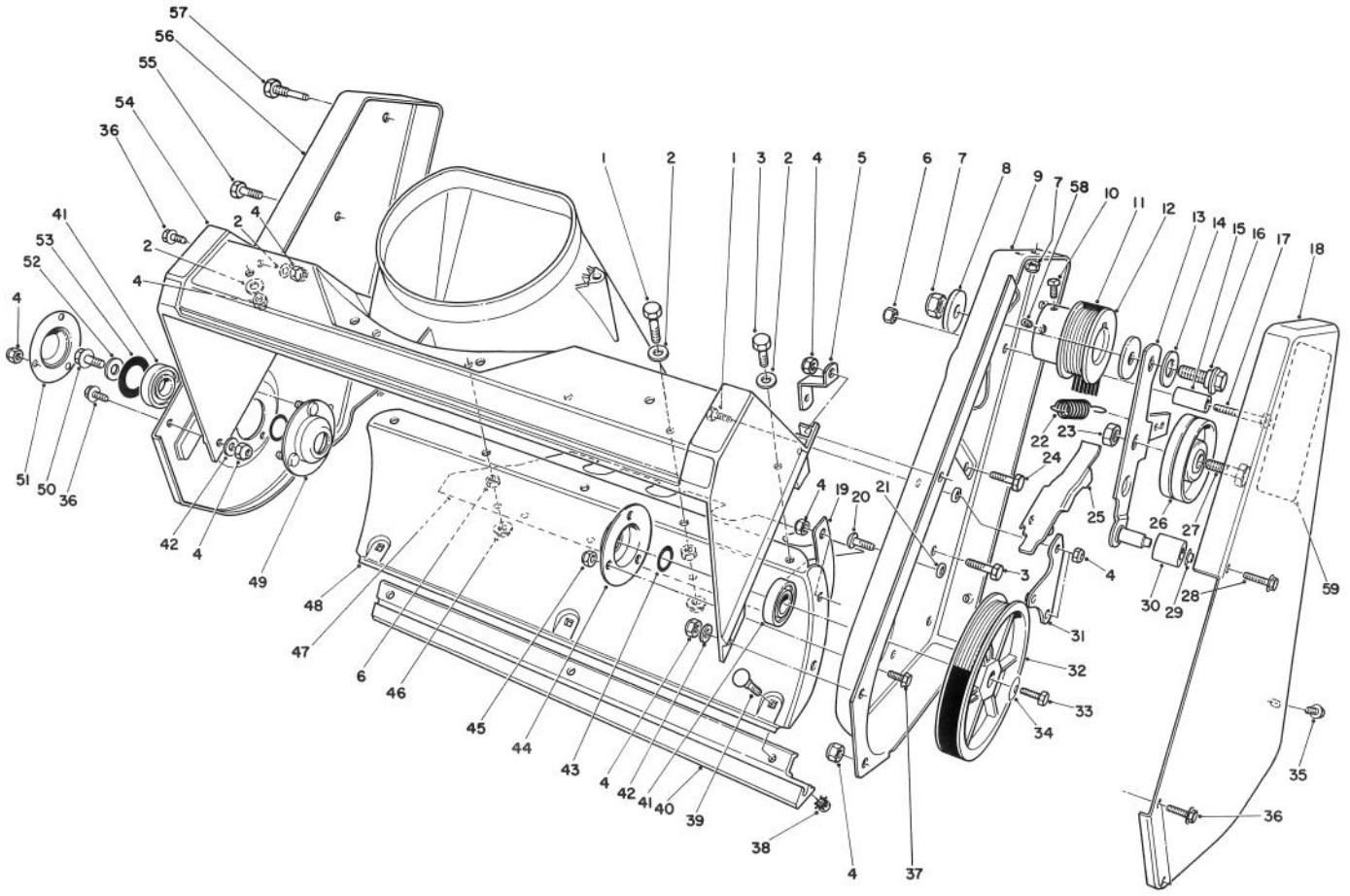

HOUSING ASSEMBLY

Ref. No.	Part No.	Description	No. Used
1	321-6	Screw — Hex Hd.	3
2	3256-22	Washer	9
3	321-4	Screw — Hex Hd.	5
4	3296-42	Nut — Lock	16
5	55-9430	Bracket — Housing	1
6	32153-4	Nut — Lock	6
7	3296-29	Nut — Lock	3
8	5-4460	Washer	2
9	55-8850	Sideplate — L.H.	1
10	3241-7	Screw — Set, Sq. Hd.	1
11	55-9300	Belt — Drive	1
12	55-9180	Pulley — Engine	1
13	12-2969	Idler Arm Assembly (Incl. Ref. #29 & 30)	1

Ref. No.	Part No.	Description	No. Used
14	25-5640	Washer	1
15	55-9530	Guide — Drive Belt	1
16	27-0410	Screw — Shoulder	1
17	321-13	Screw — Hex. Hd.	1
18	55-9010	Cover — Drive	1
19	56-2610	Bracket — Lower Housing	1
20	3274-31	Screw — Button Hd.	1
21	55-9620	Spacer	2
22	55-9280	Spring — Extension	1
23	32152-2	Nut — Lock	1
24	322-3	Screw — Hex Hd.	2
25	55-9550	Arm — Brake	1
26	55-9290	Pulley — Idler	1
27	323-29	Screw — Hex. Hd.	1

©The Toro Company — 1986

PRICE $1.00

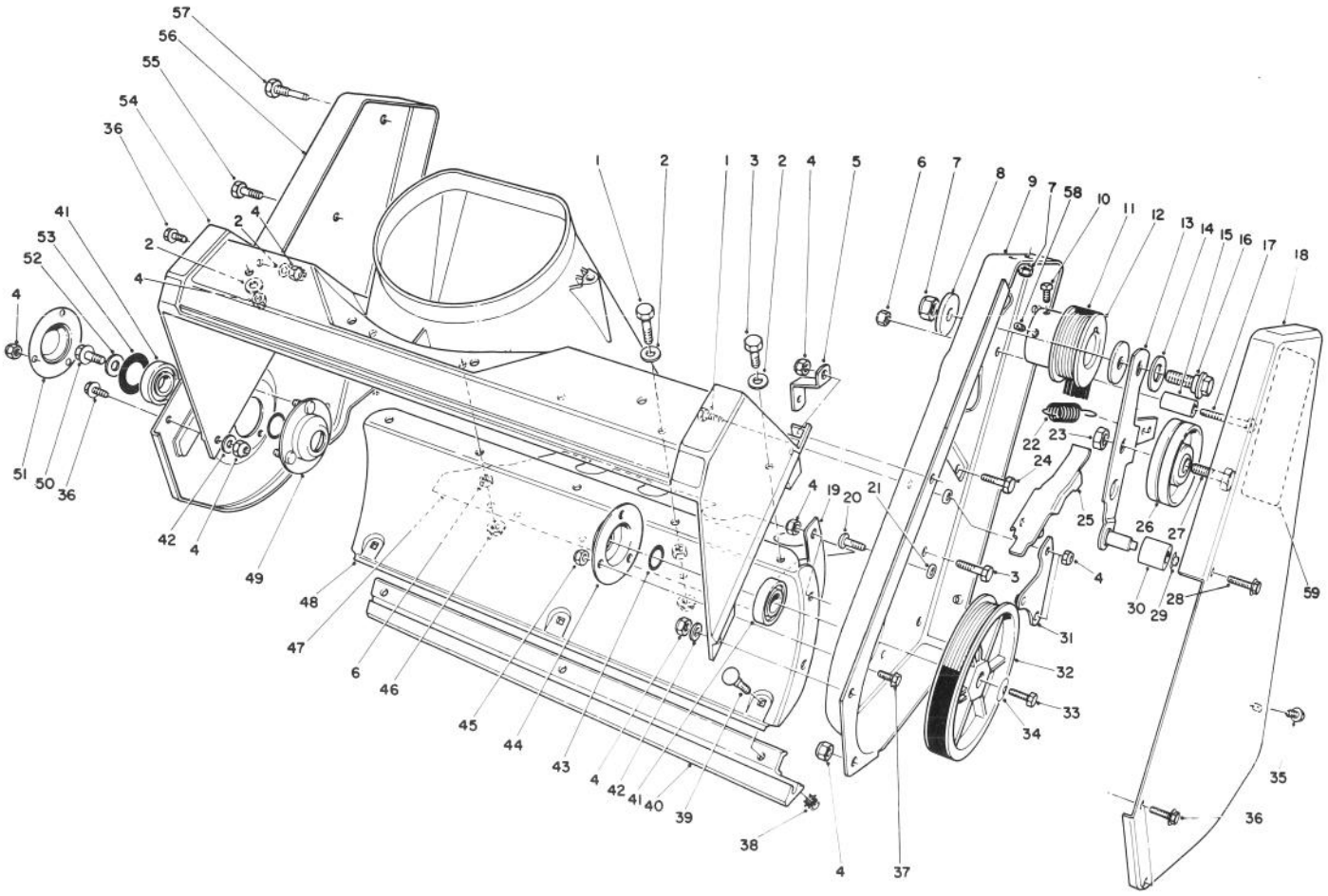

HOUSING ASSEMBLY (Continued)

Ref. No.	Part No.	Description	No. Used
28	36-3860	Screw — Special	1
29	32112-11	Pushnut	1
30	55-9520	Roller — Brake	1
31	55-9570	Pivot Plate Assembly	1
32	60-9320	Pulley — Rotor	1
33	321-30	Screw — Hex. Hd.	1
34	3290-456	Washer — Belleville	1
35	12-3270	Screw — Self Tapping	2
36	32105-15	Screw — Hex. Hd.	7
37	32105-8	Screw — Hex. Hd.	3
38	32149-2	Nut — Keps	3
39	3229-11	Screw — Carriage	3
40	55-8760	Scraper	1
41	38-7820	Bearing — Ball	2
42	3256-67	Washer	2
43	52-7280	Washer — Thrust	2

Ref. No.	Part No.	Description	No. Used
44	38-8620	Retainer — Bearing	1
45	3296-2	Nut — Lock	3
46	32128-10	Nut — Flange Lock	2
47	55-9510	Cover — Bottom	1
48	55-9220	Housing — Lower	1
49	52-9110	Flange — Bearing	1
50	3234-25	Screw — Hex. Flange Hd.	1
51	52-7290	Retainer — Bearing	1
52	3256-24	Washer	1
53	52-7270	Washer — Rubber	1
54	55-8700	Housing	1
55	322-43	Screw — Hex. Hd.	1
56	55-8840	Sideplate — R.H.	1
57	38-8211	Pin	1
58	3245-41	Screw — Set	1
59	60-9480	Decal — Belt Routing	1

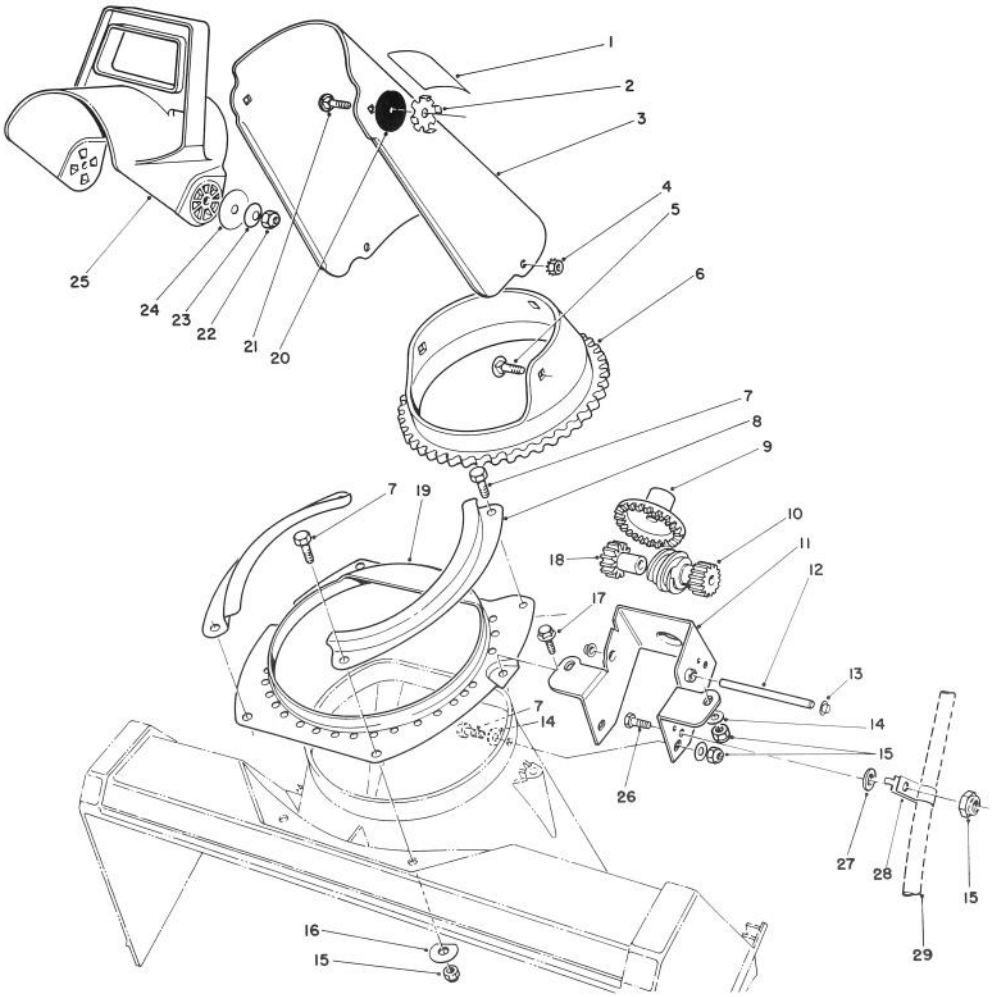

DISCHARGE CHUTE ASSEMBLY

Ref. No.	Part No.	Description	No. Used
1	55-9650	Decal — Discharge Danger	1
2	55-8950	Plate — Friction	2
3	12-5959	Chute — Discharge (Incl. Ref. #1)	1
4	32149-1	Nut — Keps	3
5	3230-18	Screw — Carriage	3
6	55-8720	Gear Ring — Chute	1
7	321-4	Screw — Hex Hd.	6
8	55-8910	Retainer — Chute Ring	2
9	55-8740	Gear — Face	1
10	55-8730	Gear — Worm/Spur	1
11	61-4610	Bracket — Chute Gears	1
12	55-9150	Shaft — Gear	1
13	32112-11	Pushnut	2
14	3256-22	Washer	6

Ref. No.	Part No.	Description	No. Used
15	3296-42	Nut — Lock	8
16	55-9680	Washer	2
17	46-8092	Screw — Special	2
18	55-8750	Spacer/Spur Gear	1
19	55-8920	Ring — Chute Support	1
20	20-4320	Washer — Rubber	2
21	3230-22	Bolt — Carriage	2
22	3296-29	Nut — Lock	2
23	3290-340	Washer — Belleville	2
24	3256-68	Washer	2
25	56-2680	Deflector	1
26	3229-11	Carriage Bolt	2
27	3256-23	Washer	2
28	61-4630	Cable Clamp	2
29	61-4860	Cable Cover	1

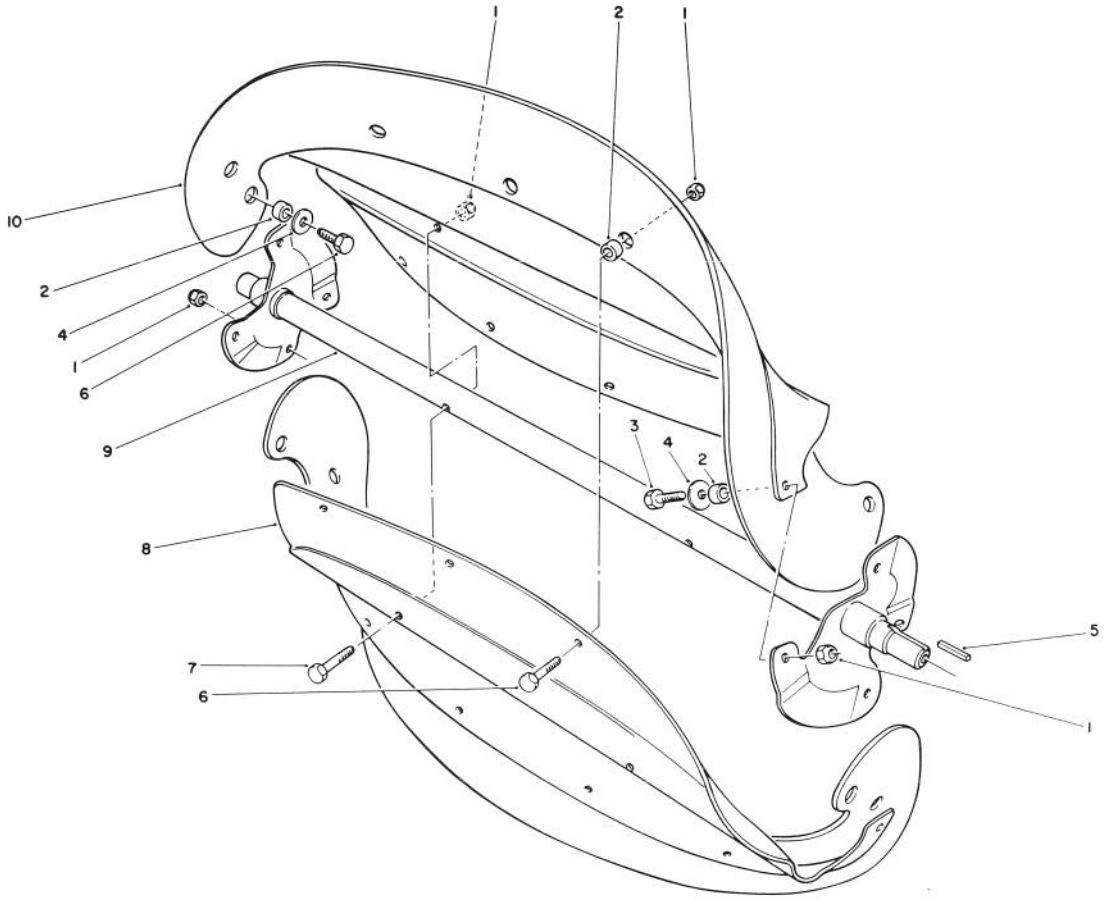

ROTOR ASSEMBLY

Ref. No.	Part No.	Description	No. Used
1	3296-56	Nut — Lock	18
2	55-9370	Spacer	16
3	321-5	Screw — Hex Hd.	4
4	3256-67	Washer	8
5	10-8040	Key — Square	1

Ref. No.	Part No.	Description	No. Used
6	321-4	Screw — Hex Hd.	12
7	321-8	Screw — Hex. Hd.	2
8	55-8900	Rotor Half	2
9	55-9200	Rotor Shaft Assembly	1
10	55-9250	Blade — Rotor	2

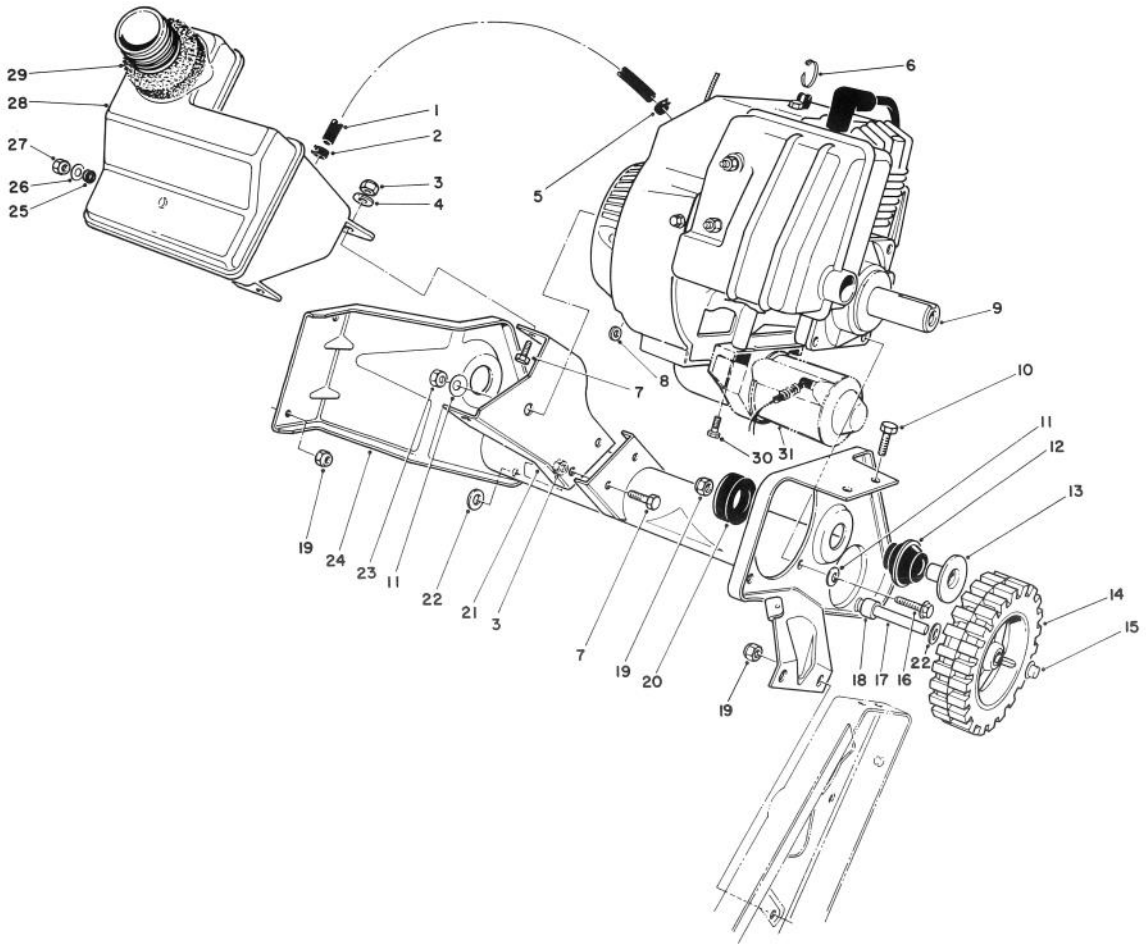

ENGINE & MAIN FRAME ASSEMBLY

Ref. No.	Part No.	Description	No. Used
1	49-2480	Line — Fuel	1
2	2412-86	Clamp — Fuel Line	1
3	3296-42	Nut — Lock	4
4	3256-22	Washer	2
5	2412-80	Clamp — Fuel Line	1
6	250-4	Cable Tie	1
7	321-4	Screw — Hex Hd.	4
8	55-9620	Spacer	1
9		Engine Assembly	1
10	322-3	Screw — Hex Hd.	2
11	3290-456	Washer — Belleville	5
12	55-9460	Mount — Rebound	2
13	55-9470	Tube — Spacer	2
14	23-3250	Wheel Assembly	2
15	3290-320	Pushnut	2
16	81-0570	Bolt — Engine Mount	4

Ref. No.	Part No.	Description	No. Used
17	60-9300	Shaft — Axle	1
18	55-9630	Spacer — Wheel	1
19	3296-29	Nut — Lock	5
20	55-9450	Mount — Load	2
21	55-9070	Support — Recoil	1
22	3256-24	Washer	2
23	81-0300	Nut — Hex	1
24	55-9230	Frame Assembly	1
25	237-89	Grommet	1
26	3256-23	Washer	1
27	32152-8	Nut — Lock	1
28	12-4669	Tank — Fuel (Incl. Ref. #25)	1
29	55-9310	Seal — Tank	1
30	56-6380	Screw, M8	2
31*		Starter Motor	1

*Note: See page 7

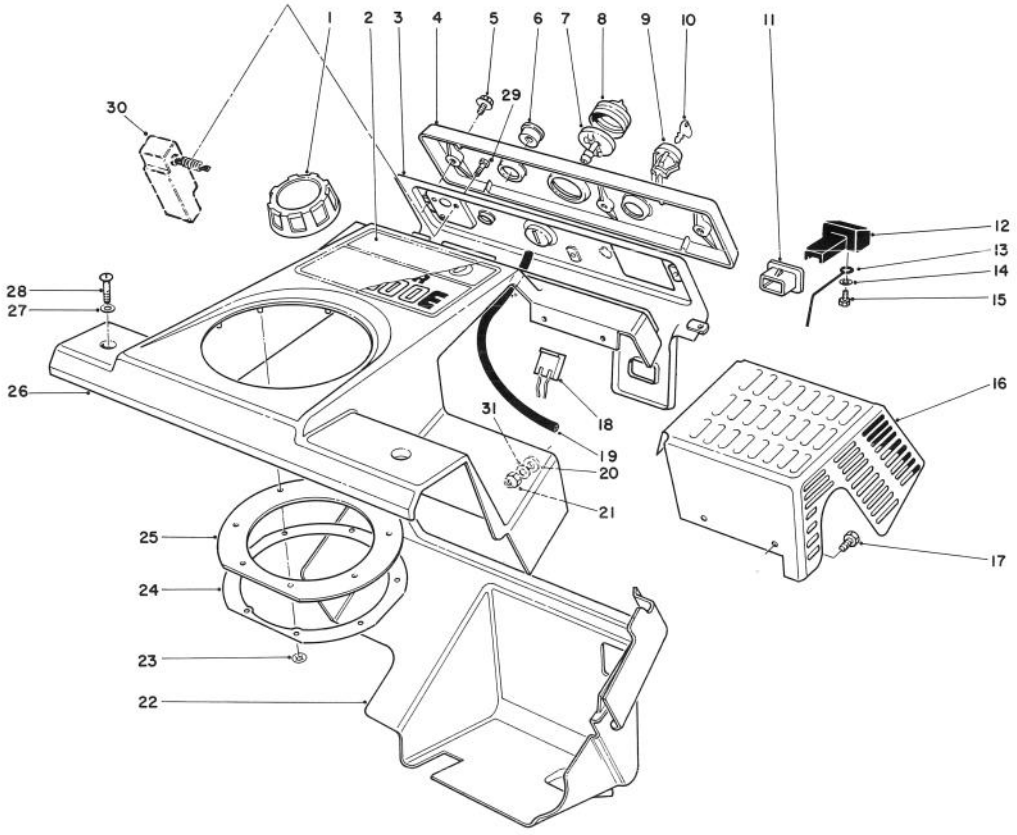

CONTROL PANEL & SHROUDING ASSEMBLY

Ref. No.	Part No.	Description	No. Used
1	55-3573	Gas Cap Assembly	1
2	61-4420	Decal — CCR-2000 Electric Start	1
3	12-4659	Panel — Control (Incl. Ref. #6-8 & 11)	1
4	61-4410	Name Plate Control	1
5	12-5450	Screw — Hex Flange Hd.	3
6	55-9410	Guide — Starter Rope	1
7	44-2750	Body — Primer	1
8	44-3100	Bulb — Primer	1
9	40-5940	Switch — Key	1
10	33-2010	Key	2
11	55-8820	Fitting — Choke Control	1
12	55-8810	Control — Choke	1
13	55-9160	Linkage — Choke	1
14	38-5710	Washer	1
15	32104-130	Screw — Hex Hd.	1

Ref. No.	Part No.	Description	No. Used
16	55-9210	Shield — Heat	1
17	32105-8	Screw — Hex Hd.	4
18	218-532	Connector Body	1
19	44-3171	Hose — Primer	1
20	55-9660	Washer — Rubber	4
21	32153-1	Nut — Lock	4
22	55-8791	Shroud — Lower	1
23	32112-12	Pushnut	8
24	55-9540	Retainer — Chute Seal	1
25	55-9260	Seal — Chute	1
26	12-5949	Upper Shroud Assembly (Incl. Ref. #2 & 23-25)	1
27	3256-22	Washer	2
28	3250-32	Screw — Phillips	2
29	32144-27	Screw	3
30*		Switch Assembly	1
31	3256-14	Washer	4

*Note: See page 7

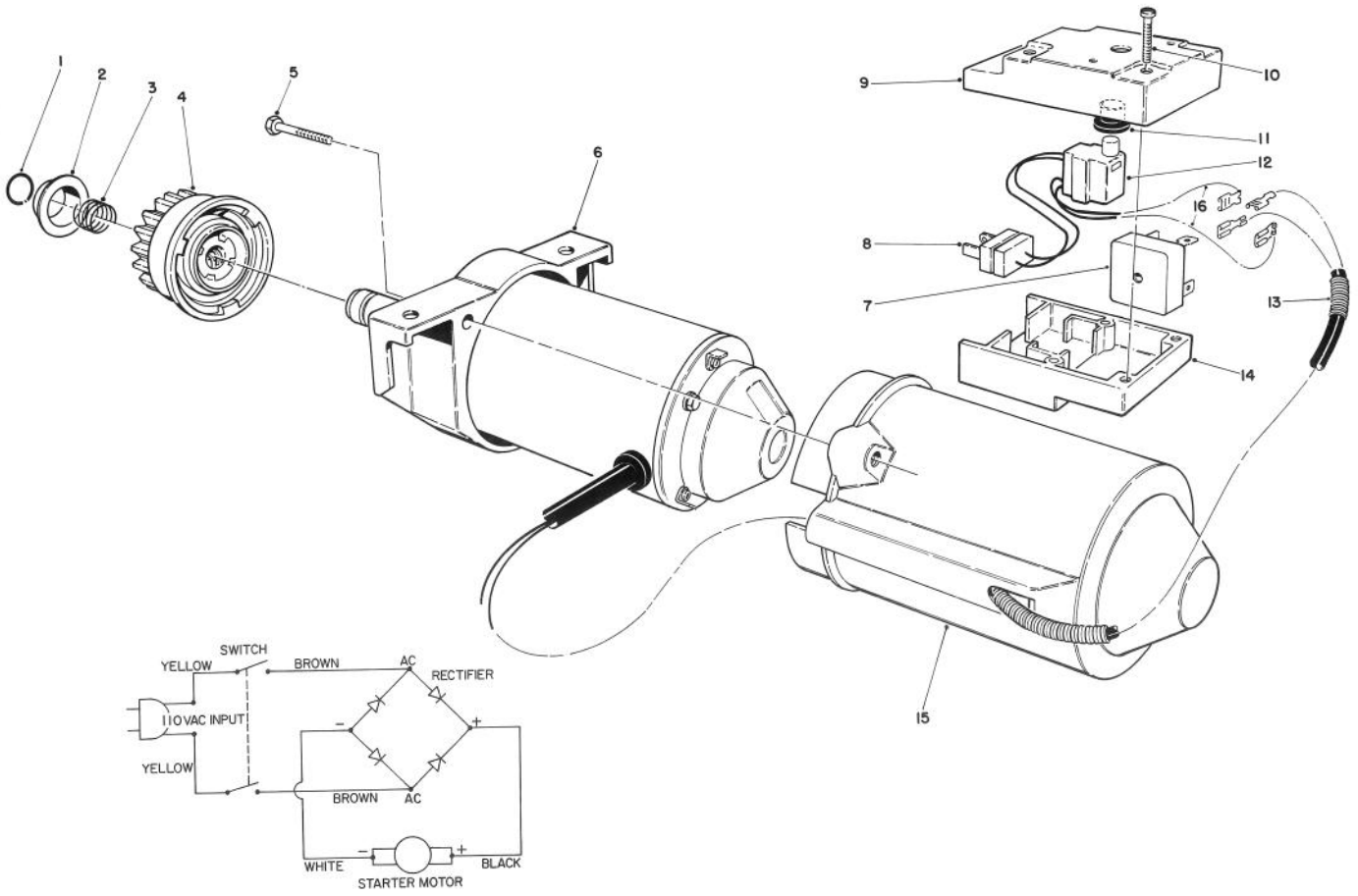

STARTER MOTOR & SWITCH HOUSING ASSEMBLY

Ref. No.	Part No.	Description	No. Used
1	61-4680	Retaining Ring	1
2	61-4670	Pinion Stop	1
3	61-4690	Spring	1
4	61-4700	Pinion Assembly	1
5	61-4640	Screw — Plastite	2
6	61-4600	Starter Motor Assembly (Incl. Ref. #1-4)	1
7	37-7600	Bridge Rectifier	1
8	36-8370	Power Plug	1
9	61-4840	Cap — Switch Housing	1
10	61-4830	Screw — Plastite	4

Ref. No.	Part No.	Description	No. Used
11	61-4810	Boot — Switch	1
12	61-4820	Starter Switch	1
13	61-4860	Cable Cover	1
14	61-4850	Base — Switch Housing	1
15	61-4620	Cover — Starter Motor	1
16	36-8360	Wire — Switch to Rectifier	2
*	28-9170	7 ft. Electrical Extention Cord	1

*Not illustrated

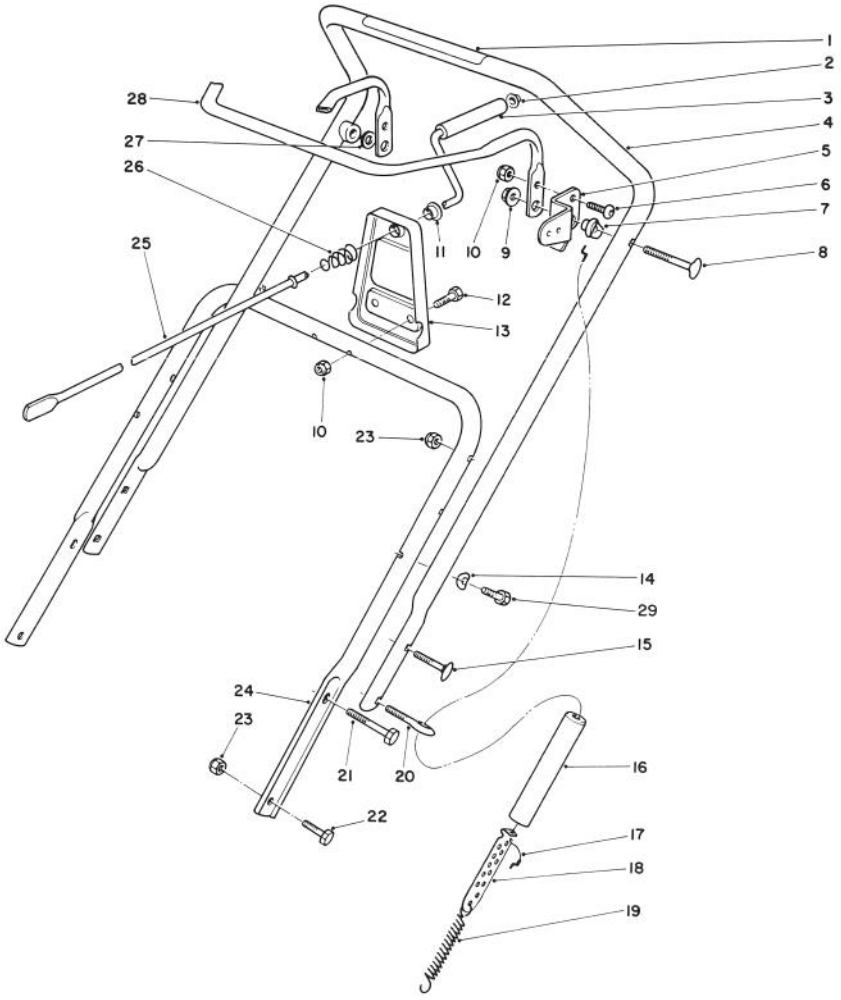

HANDLE ASSEMBLY

Ref. No.	Part No.	Description	No. Used
1	61-4430	Decal — Rotor Drive	1
2	3290-320	Pushnut	1
3	40-8230	Grip — Crank Handle	1
4	12-5939	Upper Handle Assembly (Incl. Ref. #1)	1
5	55-9100	Arm — Clutch Cable	1
6	3274-31	Screw — Button Hd.	1
7	55-9340	Spacer — Control Bar	2
8	17-9420	Screw — Handle	2
9	3296-58	Nut — Flange Lock	2
10	3296-42	Nut — Lock	3
11	256-249	Nyliner	1
12	321-13	Screw — Hex Hd.	2
13	55-9090	Support — Chute Crank	1
14	3-7501	Washer — Curved	2

Ref. No.	Part No.	Description	No. Used
15	17-9424	Screw — Handle	3
16	55-9390	Cover — Spring	1
17	55-9320	Cable — Clutch	1
18	55-9380	Adjuster — Clutch Cable	1
19	55-9270	Spring — Extension	1
20	55-9420	Bolt — Eye	1
21	322-9	Screw — Hex Hd.	2
22	322-3	Screw — Hex Hd.	2
23	3296-29	Nut — Lock	6
24	55-9120	Handle — Lower	1
25	55-9140	Rod — Chute Crank	1
26	55-9440	Spring — Compression	1
27	55-9670	Washer — Rubber	1
28	55-9130	Bar — Control	1
29	61-8640	Screw	2

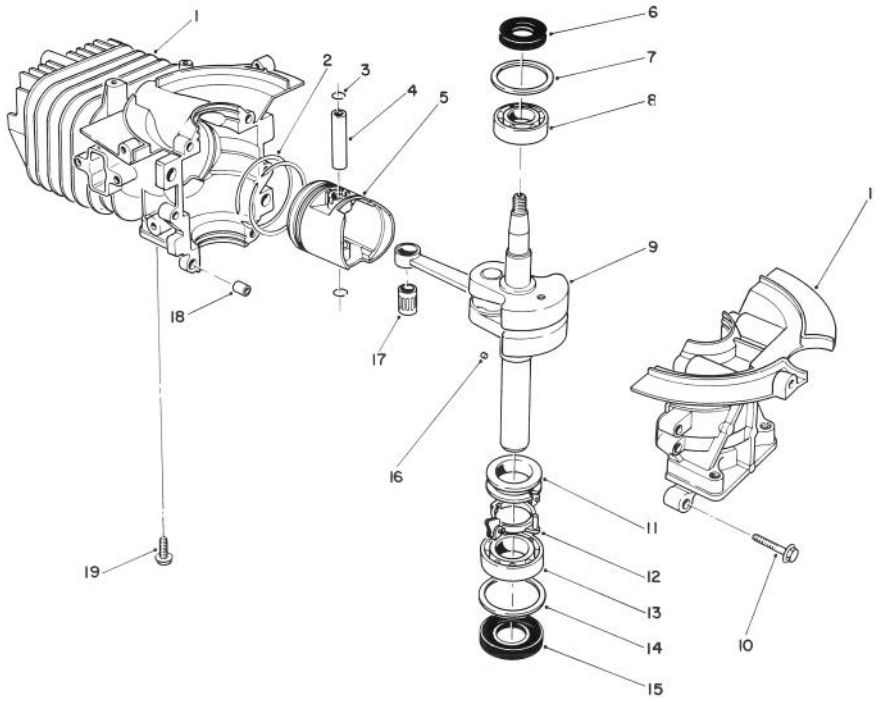

SHORT BLOCK ASSEMBLY

Ref. No.	Part No.	Description	No. Used
1	81-4590	Cylinders/Crankcase Assembly	1
2	81-0590	Ring Set	1
3	81-0620	Circlip	2
4	81-0600	Pin — Wrist	1
5	81-0580	Piston	1
6	81-0720	Seal — Oil	1
7	81-0710	Washer — Thrust	1
8	81-0690	Bearing — Upper	1
9	81-4600	Crank Shaft	1
10	81-0540	Bolt	5
11	81-0770	Collar — Governor	1

Ref. No.	Part No.	Description	No. Used
12	81-0750	Centrifugal Bracket — Governor	1
13	81-0700	Bearing — Lower	1
14	81-0730	Washer — Thrust	1
15	81-0740	Seal — Oil	1
16	81-0760	Pin — Governor	1
17	81-0610	Wrist Pin	1
18	81-0520	Dowel Pin — Crankcase	2
19	81-0570	Bolt	4
*	12-5909	Short Block (Incl. Ref. #1-19)	1

* Not Illustrated

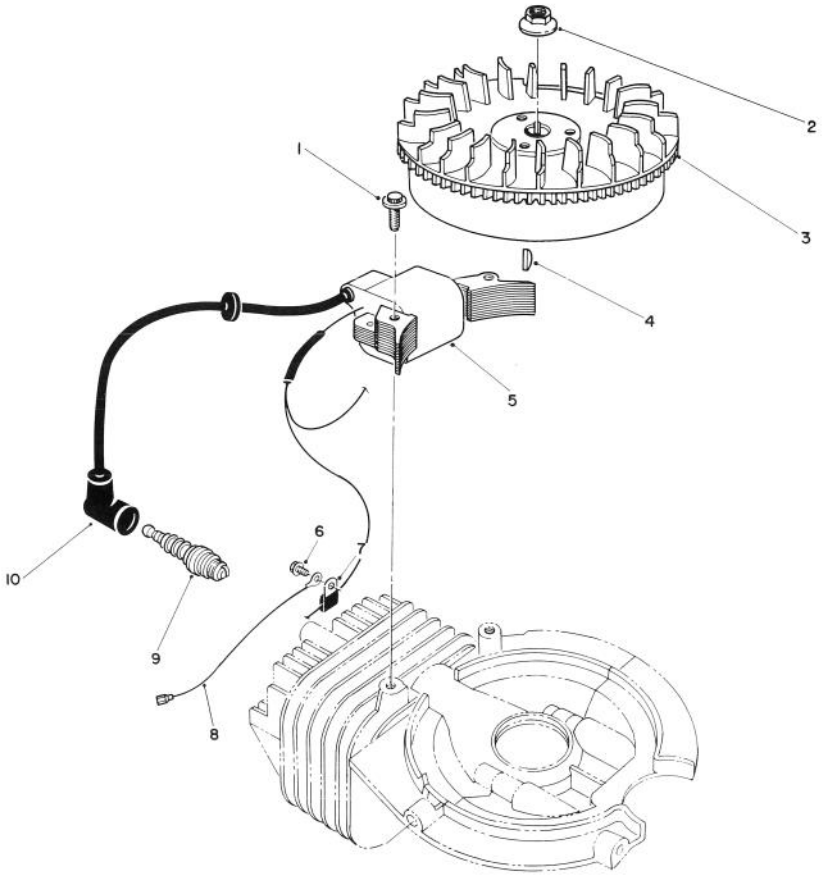

FLYWHEEL & MAGNETO ASSEMBLY

Ref. No.	Part No.	Description	No. Used
1	81-2750	Socket Hd. Capscrew	2
2	81-1330	Hex Flange Nut	1
3	81-4620	Flywheel	1
4	81-2370	Woodruff Key	1
5	81-4630	Coil — Magneto	1
6	53-1340	Bolt	1

Ref. No.	Part No.	Description	No. Used
7	81-1480	Clamp	1
8	81-2860	Wire — Ground	1
9	81-0181	Spark Plug	1
10	81-1500	Cover — Spark Plug	1
*	41-7650	Puller — Flywheel	1

*Not Illustrated

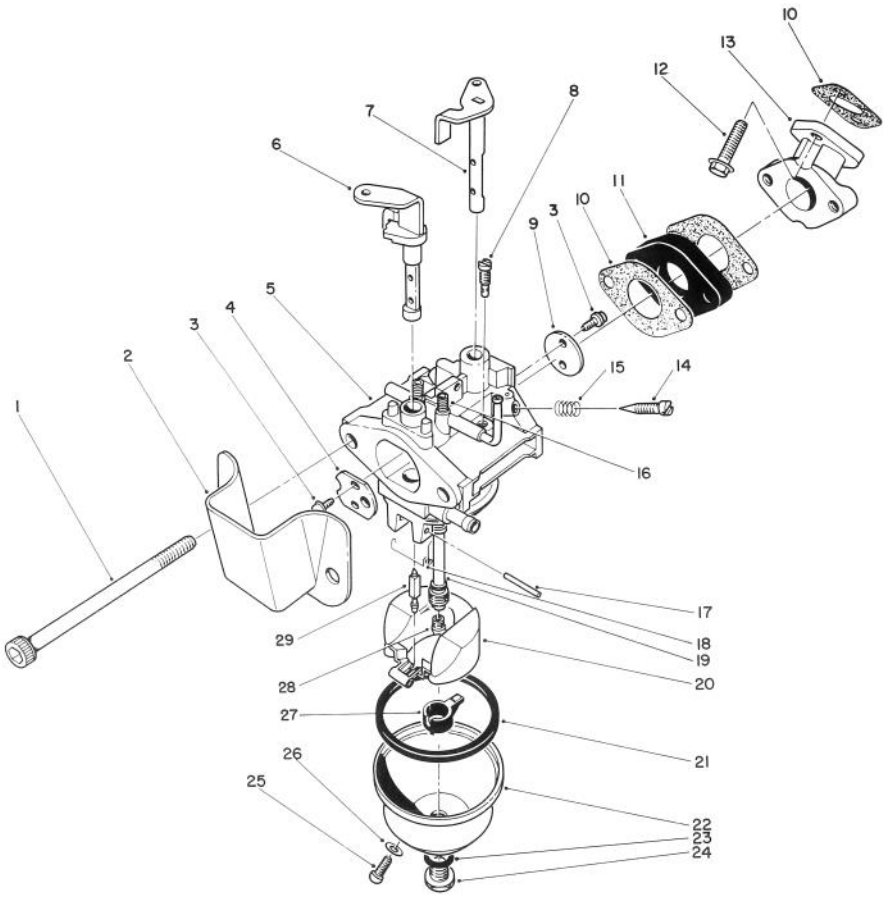

CARBURETOR ASSEMBLY

Ref. No.	Part No.	Description	No. Used
1	81-0450	Screw	2
2	81-2700	Spitcup	1
3	81-2710	Screw	4
4	81-2720	Valve — Choke	1
5		Body — Carburetor	1
6	81-2910	Shaft — Choke	1
7	81-2920	Shaft — Throttle	1
8	81-2930	Jet — Pilot	1
9	81-2940	Valve — Throttle	1
10	81-2570	Gasket — Carburetor	3
11	81-0460	Insulator — Carburetor	1
12	50-6350	Bolt	2
13	81-0470	Manifold — Intake	1
14	50-2360	Screw — Pilot	1
15	81-2580	Spring — Pilot Screw	1
16	81-2590	Spring — Choke Detent	2

Ref. No.	Part No.	Description	No. Used
17	81-2600	Pin — Hinge	1
18	81-2610	Spring — Torsion	1
19	81-2740	Nozzle — Main	1
20	81-4920	Float	1
21	81-2630	Gasket — Float Bowl	1
22	81-2640	Bowl — Float	1
23	81-2650	Gasket — Bowl Screen	1
24	81-2660	Screw — Float Bowl	1
25	81-2670	Screw — Drain	1
26	81-2680	Gasket — Drain Screw	1
27	81-4930	Spacer-Float	1
28	81-1040	Jet — Main (#80)	1
*	81-1940	Jet — Main (#73.6)	1
29	81-4700	Needle	1
*	81-4690	Carburetor Assembly Complete	1

* Not Illustrated

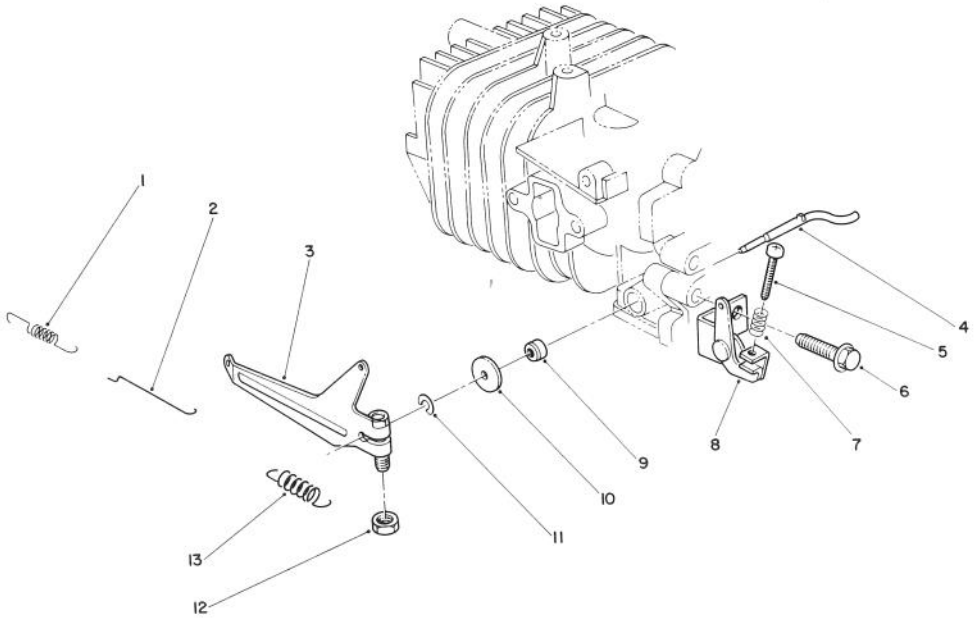

GOVERNOR ASSEMBLY

Ref. No.	Part No.	Description	No. Used
1	81-0440	Spring — Carburetor	1
2	81-0430	Rod — Carburetor	1
3	81-4650	Arm — Governor	1
4	81-2880	Shaft — Governor	1
5	81-2890	Screw	1
6	81-0540	Bolt	1
7	81-2900	Spring — Compression	1

Ref. No.	Part No.	Description	No. Used
8	81-0370	Bracket — Governor Spring	1
9	81-0850	Seal — Oil	1
10	81-0860	Washer	1
11	81-0870	E-Ring	1
12	81-0900	Hex Nut	1
13	81-0360	Spring — Governor	1

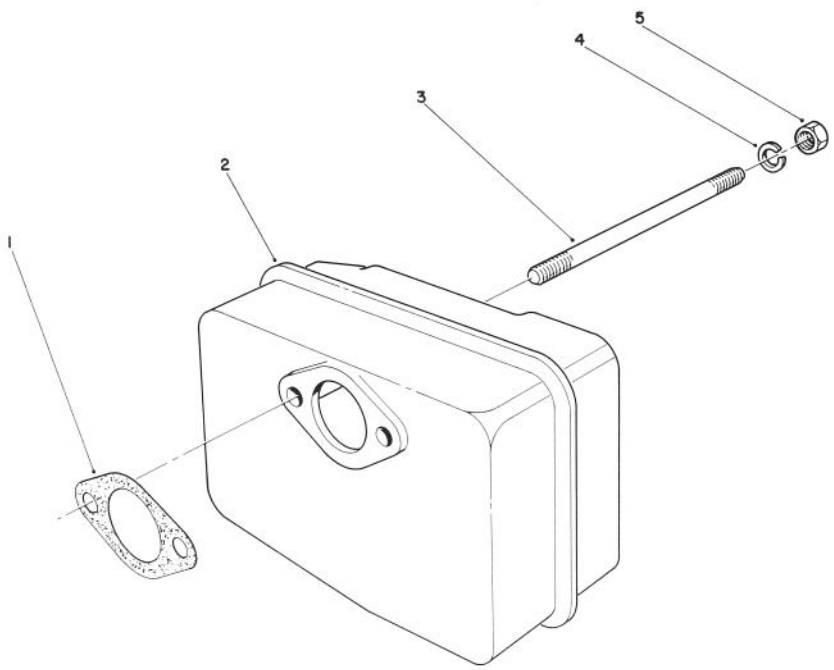

MUFFLER ASSSEMBLY

Ref. No.	Part No.	Description	No. Used
1	81-1080	Gasket — Muffler	1
2	81-0490	Muffler	1
3	81-0500	Stud — Muffler	2

Ref. No.	Part No.	Description	No. Used
4	81-1120	Lockwasher	2
5	81-1110	Hex Nut	2

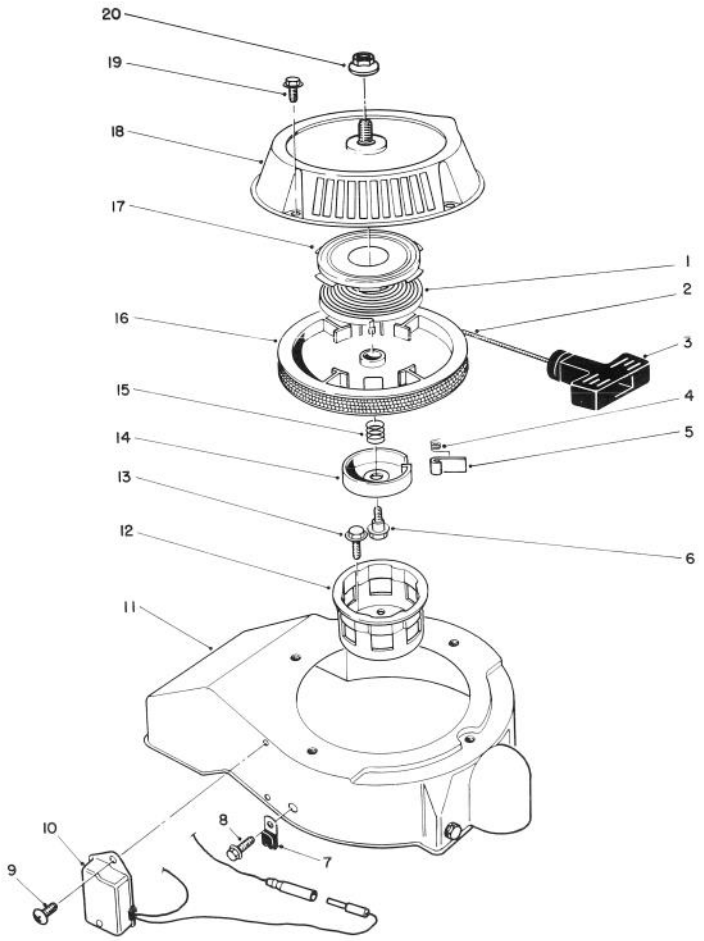

RECOIL STARTER ASSEMBLY

Ref. No.	Part No.	Description	No. Used
1	81-2300	Spring — Recoil (Incl. Ref. #17)	1
2	81-1270	Rope	1
3	81-1630	Handle — Recoil	1
4	81-1220	Spring — Dog	1
5	81-1230	Dog — Starter	1
6	81-1260	Bolt	1
7	81-1480	Clamp-Magneto Wire	1
8	53-1340	Bolt	3
9	81-4660	Screw	2
10	81-4640	Xstar Module — Magneto	1
11	81-4610	Shroud — Blower	1
12	81-1290	Cup — Starter	1
13	81-1300	Bolt	3
14	81-1250	Retainer — Dog	1
15	81-1240	Spring — Compression	1
16	81-1210	Reel — Rope Pulley	1
17		Retainer — Recoil Spring	1
18	81-0290	Case — Recoil	1
19	81-0390	Bolt	4
20	81-0300	Flange Locknut	1
*	81-0280	Starter Assembly (Incl. Ref. #1-6 & 14-18)	1

*Not illustrated

IDENTIFICATION AND ORDERING

MODEL AND SERIAL NUMBERS

The Snowthrower has two identification numbers: a model number and a serial number. The two numbers are stamped on a decal which is located on back of the mainframe assembly. In any correspondence concerning the Snowthrower, supply model and serial numbers to assure that correct information and replacement parts are obtained.

To order replacement parts from an Authorized TORO Service Dealer, supply the following information:

1. Model and serial numbers of the Snowthrower.
2. Part number, description, and quantity of part(s) desired.

Note: Do not order by reference number if a parts catalog is being used: use the PART NUMBER.

The Toro Promise

A Two Year Limited Warranty
On All
Gasoline Powered Consumer Products

The Toro Company promises to repair any TORO Product if defective in materials or workmanship. The following time periods from the date of purchase apply:

Residential Product . . . . . 2 Year
Residential Products Used Commercially . . . 45 Days

The costs of parts and labor are included, but the customer pays the transportation costs. Just return any residential product to an Authorized TORO Service Dealer or TORO Distributor.

Should you feel your TORO Product is defective and wish to rely on The Toro Promise, the following procedure is recommended:

1. Contact any Authorized TORO Service Dealer, TORO Master Service Dealer, or TORO Distributor (the Yellow Pages of your telephone directory is a good reference source).
2. He will either instruct you to return the product to him or recommend another Authorized TORO Service outlet which might be more convenient.
3. Bring the product along with your original sales slip, or other evidence of purchase date, to the service dealer.
4. The servicing dealer will inspect the unit, advise you whether the product is defective and, if so, make all repairs necessary to correct the defect without extra charge to you.

If for any reason you are dissatisfied with the dealer's analysis of the defect or the service performed, you may contact us.

Write:

TORO Consumer Service Department
8111 Lyndale Avenue South
Minneapolis, Minnesota 55420

The above remedy of product defects through repair by an Authorized TORO Service Dealer is the purchaser's sole remedy for any defect.

THERE IS NO OTHER EXPRESS WARRANTY. ALL IMPLIED WARRANTIES OF MERCHANTABILITY AND FITNESS FOR USE ARE LIMITED TO THE DURATION OF THE EXPRESS WARRANTY.

Some states do not allow limitations on how long an implied warranty lasts, so the above limitation may not apply to you.

This warranty applies only to parts or components which are defective and does not cover repairs necessary due to normal wear, misuse, accidents, or lack of proper maintenance. Regular, routine maintenance of the unit to keep it in proper operating condition is the responsibility of the owner.

All warranty repairs reimbursable under The Toro Promise must be performed by an Authorized TORO Service Dealer using Toro approved replacement parts.

Repairs or attemped repairs by anyone other than an Authorized TORO Service Account are not reimbursable under The Toro Promise. In addition, these unauthorized repair attempts may result in additional malfunctions, the correction of which is not covered by warranty.

THE TORO COMPANY IS NOT LIABLE FOR INDIRECT, INCIDENTAL OR CONSEQUENTIAL DAMAGES IN CONNECTION WITH THE USE OF THE PRODUCT INCLUDING ANY COST OR EXPENSE OF PROVIDING SUBSTITUTE EQUIPMENT OR SERVICE DURING PERIODS OF MALFUNCTION OR NON-USE.

Some states do not allow the exclusion or limitation of incidental or consequential damages, so the above limitation or exclusion may not apply to you.

This warranty gives you specific legal rights, and you may also have other rights which vary from state to state.

COUNTRIES OTHER THAN THE UNITED STATES OR CANADA

Customers who have purchased TORO products exported from the United States or Canada should contact their TORO Distributor (Dealer) to obtain guarantee policies for your country, province or state. If for any reason you are dissatisfied with your Distributor's service or have difficulty obtaining guarantee information, contact the TORO importer. If all other remedies fail, you may contact us at The Toro Company.

Compliance with Radio Interference Regulations Certified.
Certifie Conforme au Reglement sur le Brouillage Radioelectrique.

MAINTENANCE RECORD