Form No. 3352-860

Super Recycler®
Lawn Mower

Model No. 20057—Serial No. 250000001 and Up

Operator's Manual

Introduction

Read this manual carefully to learn how to operate and maintain your product properly and to avoid injury and product damage. You are responsible for operating the product properly and safely.

You may contact Toro directly at www.toro.com for product and accessory information, help finding a dealer, or to register your product.

Whenever you need service, genuine Toro parts, or additional information, contact an Authorized Service Dealer and have the model and serial numbers of your product ready. The illustration below identifies the location of the model and serial numbers on the product. Write the numbers in the space provided below:

Model #:

Serial #:

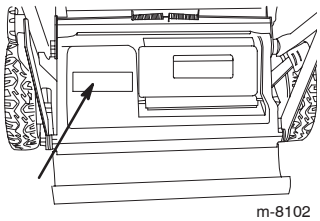

m-8102

This manual identifies potential hazards and has safety messages identified by the following words:

- **Danger** signals an extreme hazard that **will** cause serious injury or death if you do not follow the recommended precautions.
- **Warning** signals a hazard that **may** cause serious injury or death if you do not follow the recommended precautions.
- **Caution** signals a hazard that may cause minor or moderate injury if you do not follow the recommended precautions.

This manual uses two other words to highlight information. **Important:** calls attention to special mechanical information and **Note:** emphasizes general information worthy of special attention.

Warning

The engine exhaust from this product contains chemicals known to the State of California to cause cancer, birth defects, or other reproductive harm.

Important: This engine is not equipped with a spark arrester muffler. It is a violation of California Public Resource Code Section 4442 to use or operate this engine on any forest-covered, brush-covered or grass-covered land. Other states or federal areas may have similar laws.

This spark ignition system complies with Canadian ICES-002.

Ce système d'allumage par étincelle de véhicule est conforme à la norme NMB-002 du Canada.

The enclosed Engine Owner's Manual is supplied for information regarding The U.S. Environmental Protection Agency (EPA) and the California Emission Control Regulation of emission systems, maintenance and warranty. Replacements may be ordered through the engine manufacturer.

Safety

This lawn mower meets or exceeds the CPSC blade safety requirements for walk-behind rotary lawn mowers and the B71.1 specifications of the American National Standards Institute in effect at the time of production.

Read and understand the contents of this manual before the engine is ever started.

⚠ This is the safety alert symbol. It is used to alert you to potential personal injury hazards. Obey all safety messages that follow this symbol to avoid possible injury or death.

Improperly using or maintaining this mower could result in injury or death. To reduce this potential, comply with the following safety instructions.

The following instructions have been adapted from the ANSI/OPEI standard B71.1—2003.

This cutting machine is capable of amputating hands and feet and throwing objects. Failure to observe the following safety instructions could result in serious injury or death.

© 2005 by The Toro Company
8111 Lyndale Ave., Bloomington, MN 55420, USA

Printed in the USA
All Rights Reserved

Original Instructions (EN)
Register your product at www.toro.com

General Operation

- Read, understand, and follow all instructions on the machine and in the manual(s) before starting.
- Do not put hands or feet near or under the machine. Keep clear of the discharge opening at all times.
- Only allow responsible adults, who are familiar with the instructions, to operate this machine.
- Clear the area of objects such as rocks, wire, toys, etc., which could be thrown by the blade. Stay behind the handle when the engine is running.
- Be sure the area is clear of bystanders before operating. Stop machine if anyone enters the area.
- Do not operate machine barefooted or while wearing sandals. Always wear substantial footwear.
- Do not pull machine backward unless absolutely necessary. Always look down and behind before and while moving backward.
- Never direct discharged material toward anyone. Avoid discharging material against a wall or obstruction. Material may ricochet back toward the operator. Stop the blade when crossing gravel surfaces.
- Do not operate machine without the entire grass catcher, discharge guard, rear guard, or other safety protective devices in place and working.
- Never leave a running machine unattended.
- Stop the engine and wait until the blade comes to a complete stop before cleaning the machine, removing grass catcher, or unclogging the discharge guard.
- Operate machine only in daylight or good artificial light.
- Do not operate machine while under the influence of alcohol or drugs.
- Never operate mower in wet grass. Always be sure of your footing; walk; never run.
- Disengage the drive system, if so equipped, before starting the engine.
- If the machine should start to vibrate abnormally, stop the engine and check for the cause immediately. Vibration is generally a warning of trouble.
- Always wear eye protection when operating machine.
- See manufacturer's instructions for proper operation and installation of accessories. Only use accessories approved by the manufacturer.

Slope Operation

Slopes are a major factor related to slip and fall accidents, which can result in severe injury. Operation on all slopes require extra caution. If you feel uneasy on a slope, do not mow it.

- Mow across the face of slopes; never up and down. Exercise extreme caution when changing direction on slopes.
- Watch for holes, ruts, bumps, rocks, or other hidden objects. Uneven terrain could cause a slip and fall accident. Tall grass can hide obstacles.
- Do not mow on wet grass or excessively steep slopes. Poor footing could cause a slip and fall accident.
- Do not mow near drop-offs, ditches, or embankments. You could lose your footing or balance.

Children

Tragic accidents can occur if the operator is not alert to the presence of children. Children are often attracted to the machine and the mowing activity. **Never** assume that children will remain where you last saw them.

- Keep children out of the mowing area and under the watchful care of a responsible adult other than the operator.
- Be alert and turn mower off if a child enters the area.
- Never allow children to operate the machine.
- Use extra care when approaching blind corners, shrubs, trees, or other objects that may block your view of a child.

Service

Safe Handling of Gasoline

To avoid personal injury or property damage, use extreme care in handling gasoline. Gasoline is extremely flammable and the vapors are explosive.

- Extinguish all cigarettes, cigars, pipes, and other sources of ignition.
- Use only an approved gasoline container.
- Never remove gas cap or add fuel with the engine running. Allow engine to cool before refueling.
- Never refuel the machine indoors.
- Never store the machine or fuel container where there is an open flame, spark, or pilot light such as on a water heater or on other appliances.

- Never fill containers inside a vehicle or on a truck or trailer bed with a plastic liner. Always place containers on the ground away from your vehicle before filling.
- Remove gas-powered equipment from the truck or trailer and refuel it on the ground. If this is not possible, then refuel such equipment with a portable container, rather than from a gasoline dispenser nozzle.
- Keep the nozzle in contact with the rim of the fuel tank or container opening at all times until fueling is complete. Do not use a nozzle lock-open device.
- If fuel is spilled on clothing, change clothing immediately.
- Never overfill fuel tank. Replace gas cap and tighten securely.

Warning

Exhaust contains carbon monoxide, an odorless, deadly poison that can kill you.

Do not run the engine indoors or in an enclosed area.

General Service

- Never operate machine in a closed area.
- Keep all nuts and bolts tight to be sure the equipment is in safe working condition.
- Never tamper with safety devices. Check their proper operation regularly.
- Keep machine free of grass, leaves, or other debris build-up. Clean up oil or fuel spillage and remove any fuel-soaked debris. Allow machine to cool before storing.
- If you strike a foreign object, stop and inspect the machine. Repair, if necessary, before starting.
- Never make any adjustments or repairs with the engine running. Disconnect the spark plug wire and ground against engine to prevent unintended starting.
- Check grass catcher components and the discharge guard frequently and replace with manufacturer's recommended parts, when necessary.
- Mower blades are sharp. Wrap the blade or wear gloves, and use extra caution when servicing them.
- Do not change the engine governor setting or overspeed the engine.
- Maintain or replace safety and instruction labels, as necessary.

Safety/Instruction Decals

Important: Safety and instruction decals are located near areas of potential danger. Replace damaged decals.



105-1295



105-6838

Product Overview

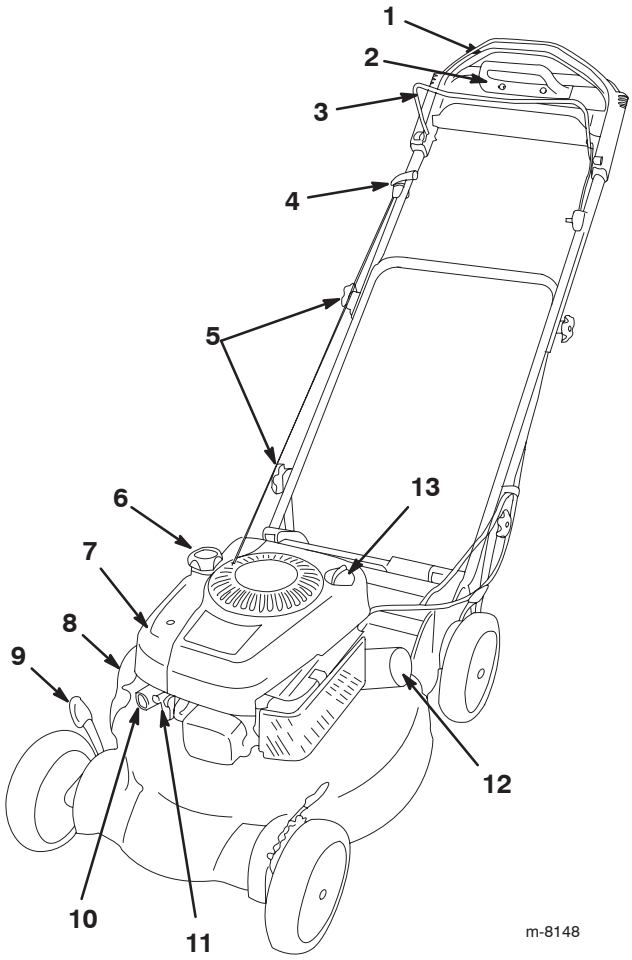

1. Upper handle
2. Traction assist handle
3. Blade control bar
4. Recoil start handle
5. Upper and lower handle knobs (4)
6. Fuel tank cap
7. Air filter
8. Side discharge
9. Cutting height lever (4)
10. Primer
11. Spark plug
12. Oil filter
13. Oil fill/Dipstick

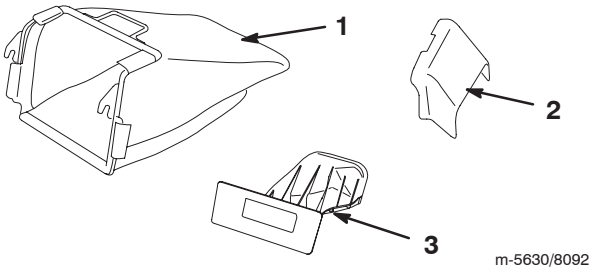

1. Grass bag
2. Side discharge chute
3. Rear discharge plug (installed)

Setup

Important: Remove and discard the protective plastic sheet that covers the engine.

Unfolding the Handle

Warning

Folding or unfolding the handle improperly can damage the cables, causing an unsafe operating condition.

- **Do not damage the cables when folding or unfolding the handle.**
- **If a cable is damaged, contact an Authorized Service Dealer.**

1. Carefully move the upper handle forward until the handle halves are in line and nest together.

A.

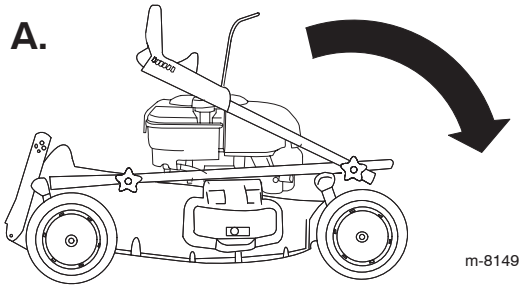

B.

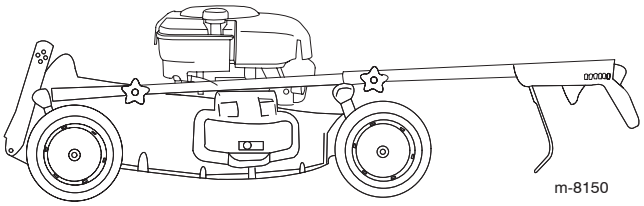

2. Tighten the upper handle knobs as tight as you can.

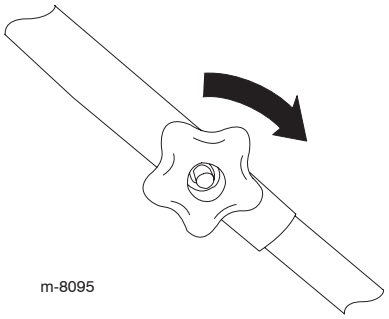

3. Rotate the handle rearward.

A.

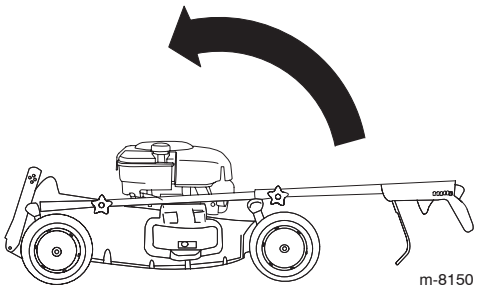

m-8150

B.

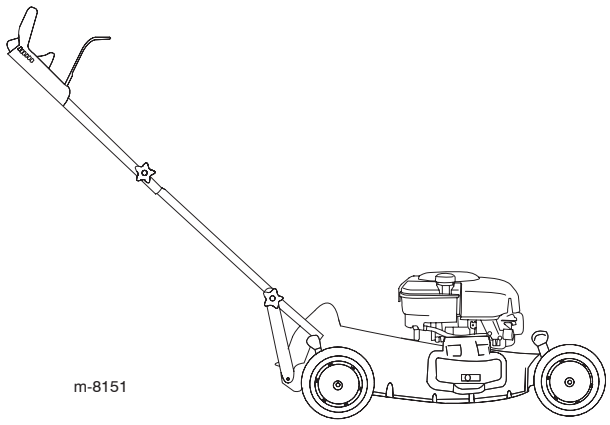

m-8151

Note: Attach the lower handle brackets (A) to lower end of both handle sides and tighten the lower handle knobs as tight as you can.

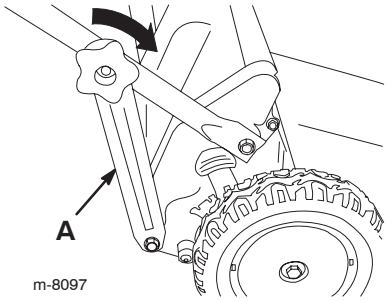

m-8097

Filling the Engine with Oil

Your mower does not come with oil in the engine.

1. Remove the dipstick.

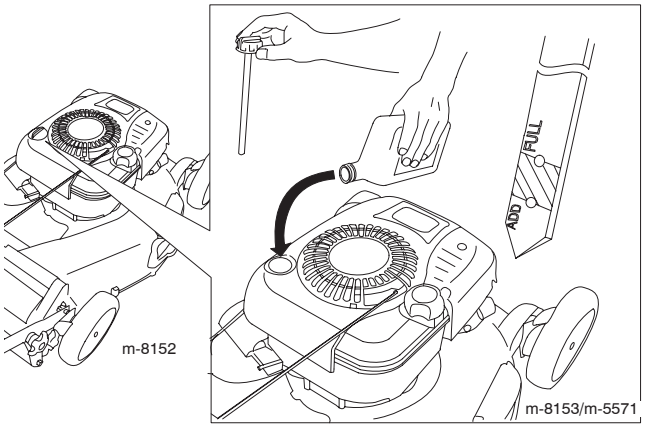

m-8152

m-8153/m-5571

2. **Slowly** pour oil into the oil fill tube until the oil level reaches the **Full** line on the dipstick. **Do not overfill.** (Max. fill: 26 oz. (0.85 l), type: SAE 30W detergent oil with an API service classification of SF, SG, SH, SJ, SL, or higher.)

3. Install the dipstick securely.

Important: **Change the engine oil after the first 5 operating hours;** change it yearly thereafter. Refer to Changing the Engine Oil on page 14.

Before Operating

Danger

Gasoline is extremely flammable and explosive. A fire or explosion from gasoline can burn you and others.

- **To prevent a static charge from igniting the gasoline, place the container and/or mower directly on the ground before filling, not in a vehicle or on an object.**
- **Fill the tank outdoors when the engine is cold. Wipe up spills.**
- **Do not handle gasoline when smoking or around an open flame or sparks.**
- **Store gasoline in an approved fuel container, out of the reach of children.**

Warning

Adjusting the cutting height may bring you into contact with the moving blade, causing serious injury.

- **Stop the engine and wait for all moving parts to stop.**
- **Do not put your fingers under the housing when adjusting the cutting height.**

Filling the Fuel Tank

Fill the fuel tank with fresh unleaded regular gasoline from a major name-brand service station.

Important: To reduce starting problems, add fuel stabilizer to the fuel all season, mixing it with gasoline less than 30 days old.

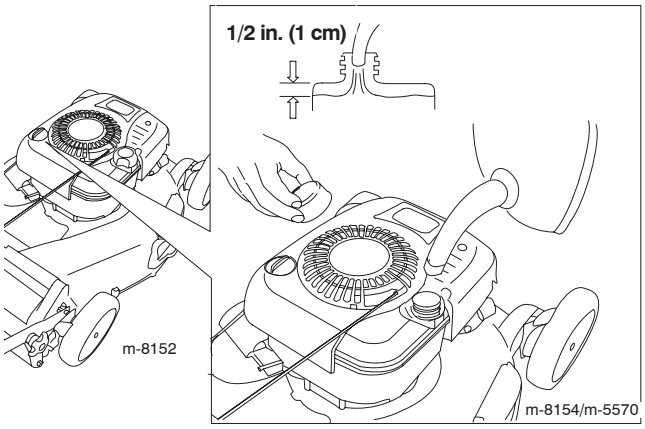

Checking the Engine Oil Level

1. Remove the dipstick, wipe it clean, and fully install the dipstick.

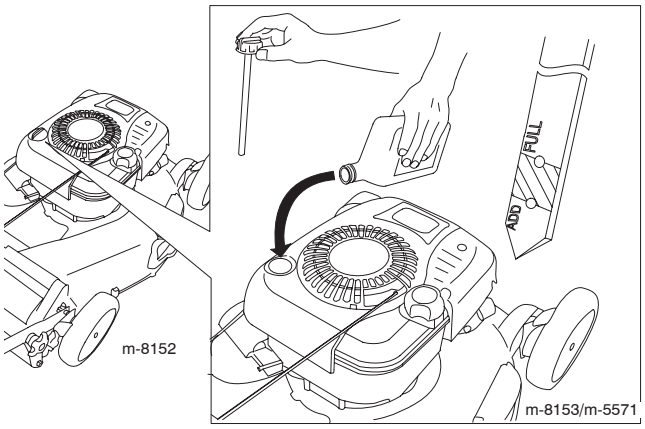

2. Remove the dipstick and check the oil level. If the oil level is below the **Add** mark on the dipstick, **slowly** pour oil into the oil fill tube to raise the oil level to the **Full** mark on the dipstick. **Do not overfill.** (Max. fill: 26 oz. (0.85 l), type: SAE 30W detergent oil with an API service classification of SF, SG, SH, SJ, SL, or higher.)

3. Install the dipstick.

Adjusting the Cutting Height

Caution

If the engine has been running, the muffler will be hot and can severely burn you.

Keep away from the hot muffler.

Adjust the cutting height as desired. Set all four wheels to the same height.

Note: To raise the mower, move all 4 cutting height levers forward; to lower the mower, move them all rearward.

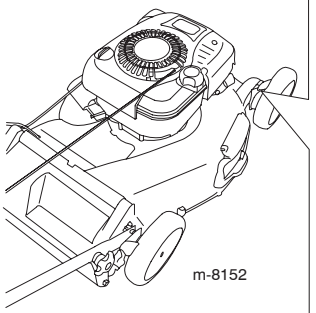

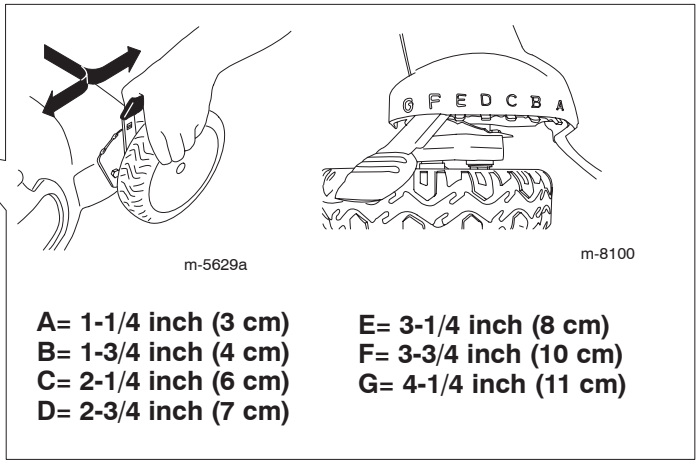

A= 1-1/4 inch (3 cm)
B= 1-3/4 inch (4 cm)
C= 2-1/4 inch (6 cm)
D= 2-3/4 inch (7 cm)
E= 3-1/4 inch (8 cm)
F= 3-3/4 inch (10 cm)
G= 4-1/4 inch (11 cm)

Adjusting the Handle Height

You may raise or lower the handle to a position comfortable for you.

1. Remove the lower handle knobs that attach the lower handle ends to the handle brackets.

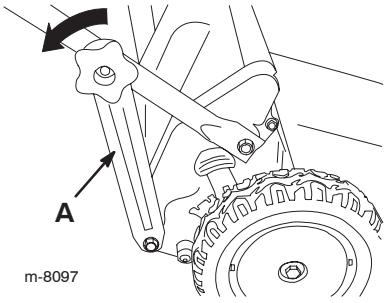

2. Insert the bolt through the hole in each of the handle brackets that sets the handle to the desired position.

Note: A is the highest position; B (either hole) is the middle position; and C is the lowest position.

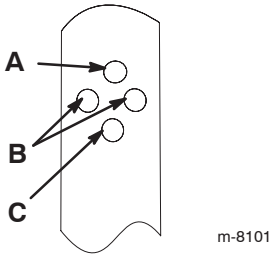

3. Install and tighten the lower handle knobs as tight as you can.

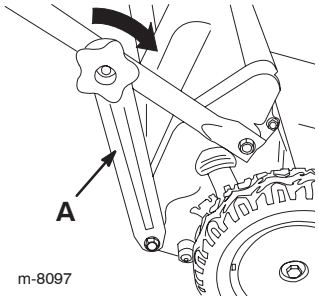

Operation

Starting the Engine

1. Firmly push in the primer 3 times with your thumb, holding the primer in for a second before releasing it each time.

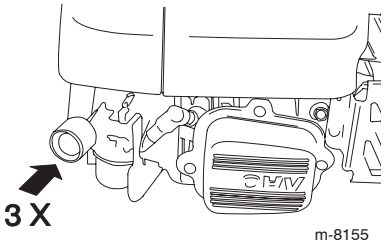

Note: If the air temperature is below 55°F (13°C), firmly push the primer in 5 times.

2. Hold the blade control bar (A) against the handle.

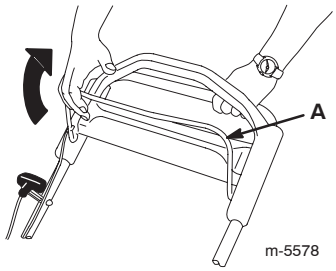

3. Pull the recoil starter.

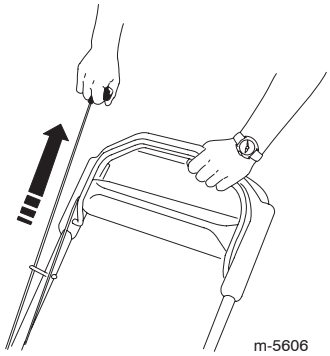

4. If the mower does not start in 1 or 2 pulls, press the primer button 1 or 2 times and try starting it again.

Note: If the mower still does not start, contact an Authorized Service Dealer.

Using the Self-propel Drive

To operate the self-propel drive, simply walk with your hands on the upper handle and your elbows at your sides, and the mower will automatically keep pace with you.

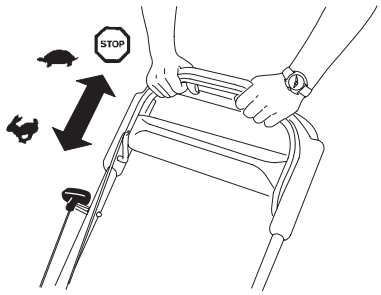

m-5582

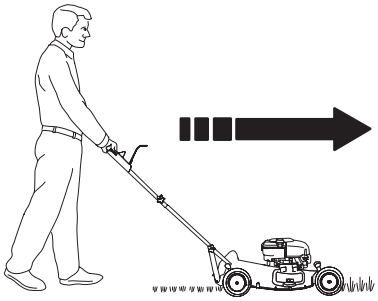

m-8156

Stopping the Engine

1. Release the blade control bar.

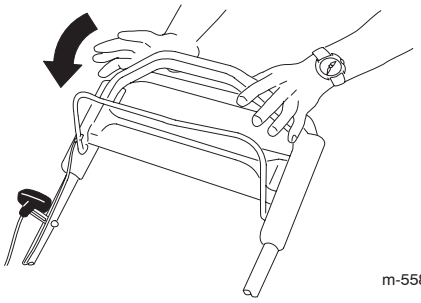

m-5582

2. Remove the ignition key when you leave the mower.

Using the Traction Assist Handle

The traction assist handle (A) allows you to use your hands to control the speed of the mower instead of your walking speed. This is helpful in some situations, such as turning tight corners, where you want the mower to move but cannot move yourself. It is also helpful for keeping the mower at maximum speed.

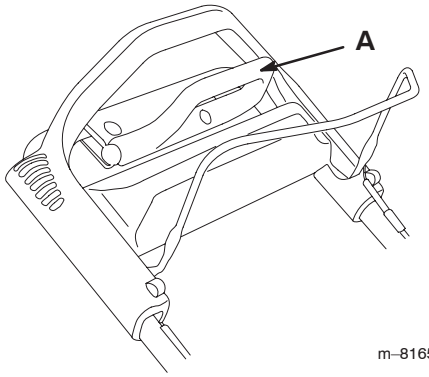

m–8165

1. Reach forward with your fingertips and grasp the corners of the traction assist handle.

2. Squeeze the 2 handles together until the mower reaches your desired ground speed.

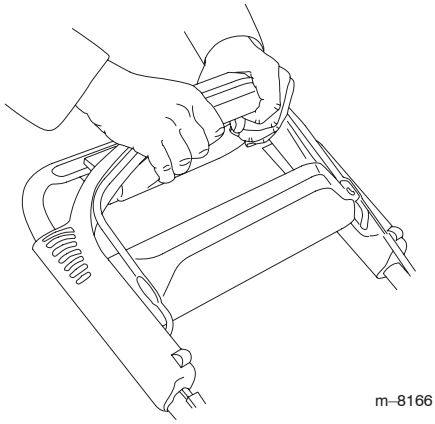

m–8166

3. When you no longer need to maintain a set speed, release the traction assist handle.

Important: The mower will continue to self-propel until you release the traction assist handle and stop walking.

Recycling the Clippings

Your mower comes from the factory ready to recycle the grass and leaf clippings back into the lawn.

If the grass bag is on the mower, remove it (refer to Removing the Grass Bag on page 11) before recycling the clippings. If the side discharge chute is on the mower, remove it and lock the side discharge door (refer to Removing the Side Discharge Chute on page 12) before recycling the clippings.

Important: Ensure that the rear discharge plug is in place before you recycle the clippings.

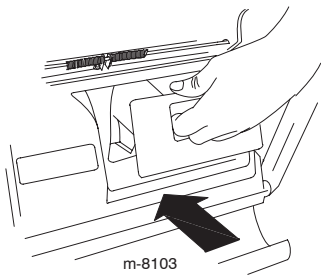

Bagging the Clippings

Use the grass bag when you want to collect grass and leaf clippings from the lawn.

If the side discharge chute is on the mower, remove it and lock the side discharge door (refer to Removing the Side Discharge Chute on page 12) before bagging the clippings.

Warning

The blade is sharp; contacting the blade can result in serious personal injury.

Stop the engine and wait for all moving parts to stop before leaving the operating position.

Installing the Grass Bag

1. Raise and hold up the rear door.

2. Remove the rear discharge plug.

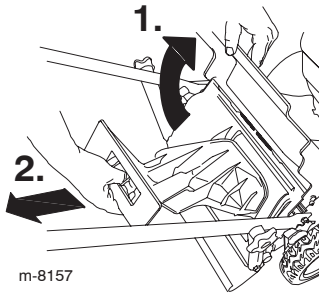

3. Route the starter rope around the lower rope guide.

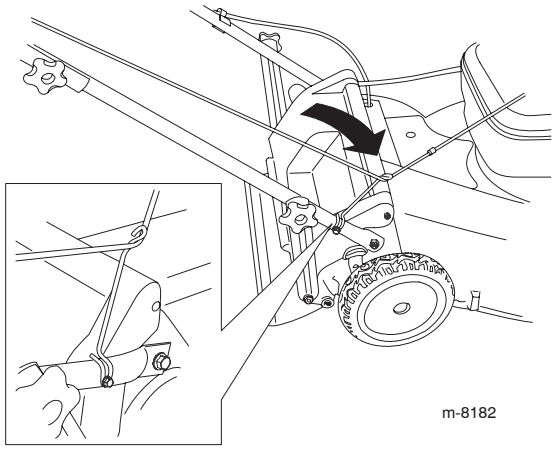

Note: The lower rope guide releases the starter rope when you pull the recoil start handle.

4. Install the bag onto the door rod.

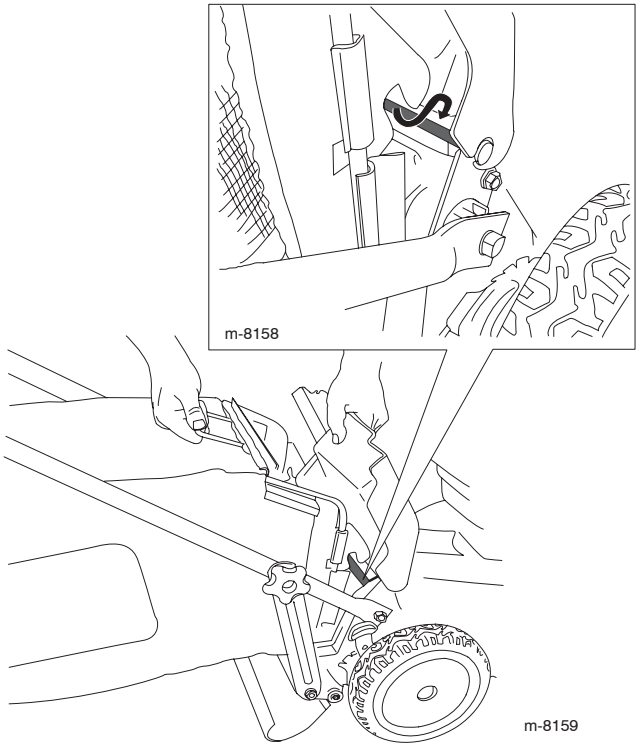

5. Lower the rear door.

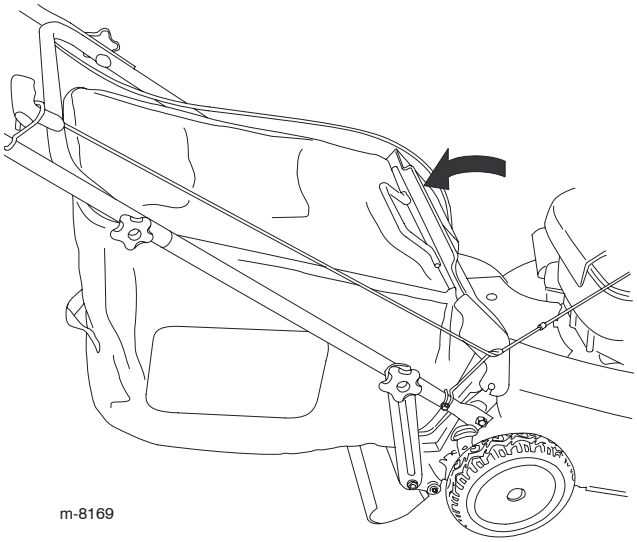

Removing the Grass Bag

To remove the bag, reverse the steps above.

Side Discharging the Clippings

Use the side discharge for cutting very tall grass.

If the grass bag is on the mower, remove it and insert the rear discharge plug (refer to Removing the Grass Bag on page 11) before side discharging the clippings.

Warning

The blade is sharp; contacting the blade can result in serious personal injury.

Stop the engine and wait for all moving parts to stop before leaving the operating position.

Installing the Side Discharge Chute

1. Unlock the side discharge door.

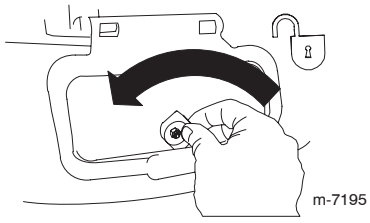

2. Lift open the side discharge door.

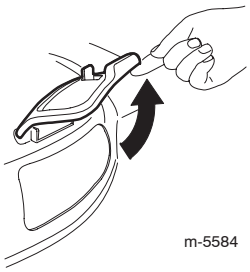

3. Install the side discharge chute and close the door onto the chute.

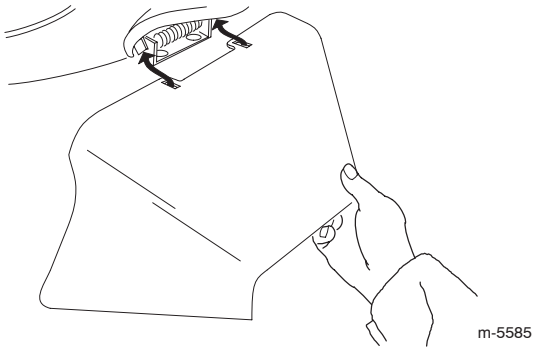

Removing the Side Discharge Chute

To remove the side discharge chute, reverse the steps above.

Important: Lock the side discharge door after you close it.

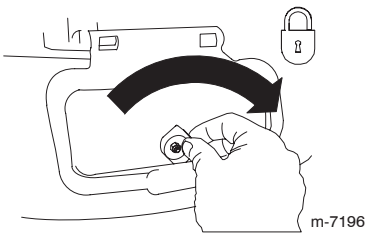

Operating Tips

- Clear the area of sticks, stones, wire, branches, and other debris that the blade could hit.
- Avoid striking solid objects with the blade. Never deliberately mow over any object.
- If the mower strikes an object or starts to vibrate, immediately stop the engine, disconnect the wire from the spark plug, and examine the mower for damage.
- For best performance, install a new blade before the cutting season begins.
- Replace the blade when necessary with a Toro replacement blade.

Cutting Grass

- Cut only about a third of the grass blade at a time. Do not cut below the 2-1/4 inch (6 cm) setting unless the grass is sparse or it is late fall when grass growth begins to slow down. Refer to Adjusting the Cutting Height on page 7.
- When cutting grass over 6 inches (15 cm) tall, mow at the highest cutting height setting and walk slower; then mow again at a lower setting for the best lawn appearance. If the grass is too long, the mower may plug and cause the engine to stall.
- Mow only dry grass or leaves. Wet grass and leaves tend to clump on the yard and can cause the mower to plug or the engine to stall.

Warning

Wet grass or leaves can cause serious injury if you slip and contact the blade. Mow only in dry conditions.

- Alternate the mowing direction. This helps disperse the clippings over the lawn for even fertilization.

If the finished lawn appearance is unsatisfactory, try one or more of the following:

- Replace the blade or have it sharpened.
- Walk at a slower pace while mowing.
- Raise the cutting height on your mower.
- Cut the grass more frequently.
- Overlap cutting swaths instead of cutting a full swath with each pass.
- Set the cutting height on the front wheels one notch lower than the rear wheels. For example, set the front wheels at 2-1/4 inches (6 cm) and the rear wheels at 2-3/4 inches (7 mm).

Cutting Leaves

- After cutting the lawn, ensure that half of the lawn shows through the cut leaf cover. You may need to make more than one pass over the leaves.
- If there are more than 5 inches (13 cm) of leaves on the lawn, set the front cutting height one or two notches higher than the rear cutting height.
- Slow down your mowing speed if the mower does not cut the leaves finely enough.

Maintenance

Note: Determine the left and right sides of the mower by standing in the operating position.

Recommended Maintenance Schedule

Important: Refer to your engine operator's manual for additional maintenance procedures.

Maintenance Service Interval	Maintenance Procedure
Each Use	• Check the engine oil level. Refer to Checking the Engine Oil Level on page 7. • Remove grass clippings and dirt from under the housing. Refer to Cleaning the Mower on page 16.
1 Year (25 Hours)[1]	• Clean the air filter pre-cleaner and replace the paper air filter; replace the paper air filter more frequently in dusty operating conditions. Refer to Replacing the Air Filter on page 14. • Check the spark plug (refer to your engine operator's manual). • Replace the blade or have the blade sharpened; replace it or have it sharpened more frequently if the edge dulls quickly. Refer to Replacing the Blade on page 14. • Lubricate the wheel gears. Refer to Lubricating the Wheel Gears on page 15.
1 Year (50 Hours)[1]	• Change the engine oil.[2] Refer to Changing the Engine Oil on page 14.
1 Year (100 Hours)[1]	• Replace the spark plug (refer to your engine operator's manual). • Change the oil filter. Refer to Changing the Oil Filter on page 15. • Clean the cooling system (refer to your engine operator's manual).
Annual Storage	• Empty the fuel tank before repairs as directed or before annual storage. Refer to Preparing the Mower for Storage on page 16.

[1]Whichever comes first

[2]Change the engine oil after the first 5 operating hours. Change the oil every 25 hours when operating the engine under a heavy load or in high temperatures.

Preparing for Maintenance

1. Stop the engine and wait for all moving parts to stop.

2. Disconnect the spark plug wire from the spark plug before performing any maintenance procedure.

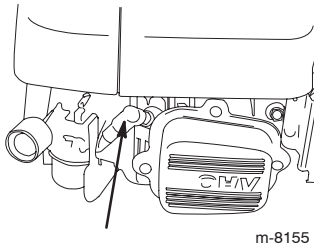

m-8155

3. After performing the maintenance procedure(s), connect the spark plug wire to the spark plug.

Note: Before tipping the mower to change the oil or replace the blade, allow the fuel tank to run dry through normal usage. If you must tip the mower prior to running out of fuel, use a hand fuel pump to remove the fuel. Always tip the mower onto its side (with the air filter up).

Warning

Tipping the mower may cause the fuel to leak. Gasoline is flammable, explosive and can cause personal injury.

Run the engine dry or remove the gasoline with a hand pump; never siphon.

Servicing the Air Filter

Clean the pre-cleaner and replace the paper air filter yearly or after every 25 operating hours; replace the paper air filter more frequently in dusty operating conditions.

Refer to Preparing for Maintenance on page 13.

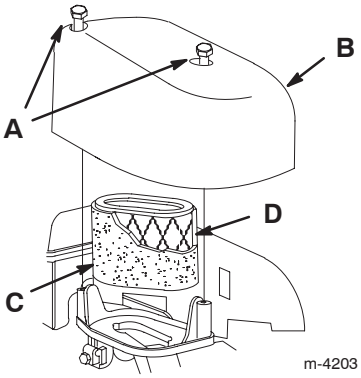

1. Remove the screws (A) that secure the air filter cover (B).

2. Remove the cover and clean it thoroughly.

3. Remove the foam pre-cleaner (C).

4. Wash the pre-cleaner with a mild detergent and water, then blot it dry.

5. Remove the paper air cleaner (D) and discard it.

Important: Do not try to clean a paper air filter.

6. Insert the new paper air filter into the foam pre-cleaner.

7. Install the new air filter.

8. Install the cover and secure it.

Changing the Engine Oil

Change the engine oil after the first 5 operating hours; change it yearly thereafter.

Run the engine a few minutes before changing the oil to warm it. Warm oil flows better and carries more contaminants.

Refer to Preparing for Maintenance on page 13.

1. Remove the dipstick.

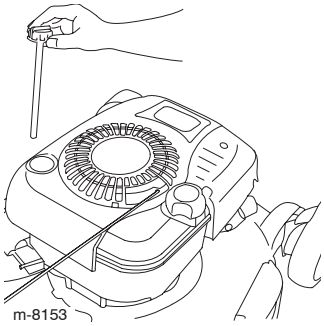

2. Tip the mower onto its side (with the air filter up) to drain the used oil out through the oil fill tube.

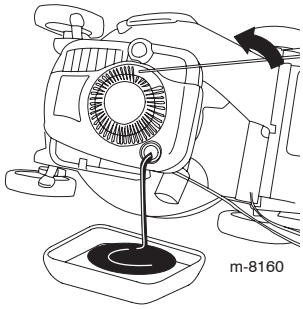

3. **Slowly** pour oil into the oil fill tube until the oil level reaches the **Full** line on the dipstick. **Do not overfill.** (Max. fill: 26 oz. (0.85 l), type: SAE 30W detergent oil with an API service classification of SF, SG, SH, SJ, SL, or higher.)

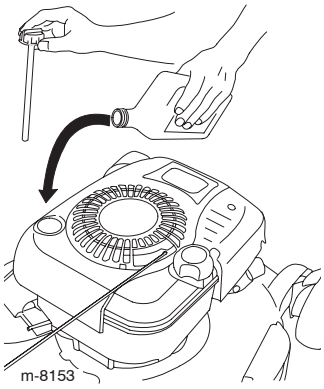

4. Install the dipstick securely.

5. Dispose of the used oil properly at a local recycling center.

Changing the Oil Filter

Replace the oil filter after every 100 operating hours hours or yearly, whichever comes first.

1. Tip the mower onto its side (with the air filter up) to drain the used oil out through the oil fill tube.

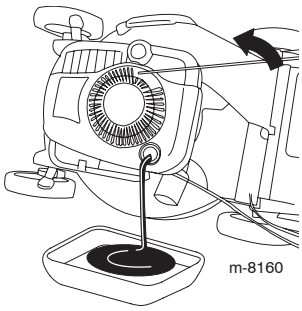

2. Remove the oil filter.

3. Use your finger to coat the gasket (A) on the new oil filter with clean oil.

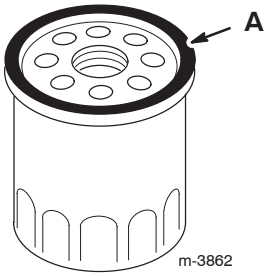

4. Screw the new oil filter on by hand until it makes contact with the oil filter adapter, then tighten it 1/2 to 3/4 of a turn more.

5. **Slowly** pour oil into the oil fill tube until the oil level reaches the **Full** line on the dipstick. **Do not overfill.** (Max. fill: 26 oz. (0.85 l), type: SAE 30W detergent oil with an API service classification of SF, SG, SH, SJ, SL, or higher.)

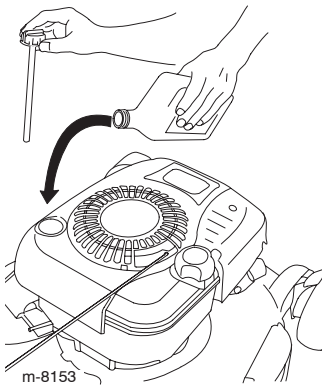

6. Start the engine and check the oil filter for leaks.

7. Recycle the oil filter according to local codes.

Lubricating the Wheel Gears

Lubricate each **rear** wheel with grease yearly.

1. Wipe the grease fittings just inside the rear wheels with a clean rag.

2. Install a grease gun onto each fitting and gently apply 2 or 3 pumps of #2 multi-purpose lithium-base grease.

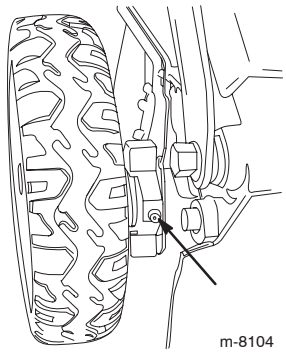

Replacing the Blade

Important: **You will need a torque wrench to install the blade properly.** If you do not have a torque wrench or are uncomfortable performing this procedure, contact an Authorized Service Dealer.

Examine the blade whenever you run out of gasoline. If the blade is damaged or cracked, replace it immediately. If the blade edge is dull or nicked, have it sharpened or replace it.

Warning

The blade is sharp; contacting the blade can result in serious personal injury.

Wear cloth or leather gloves when servicing the blade.

1. Disconnect the spark plug wire from the spark plug. Refer to Preparing for Maintenance on page 13.

2. Tip the mower onto its side (with the air filter up).

3. Use a block of wood to hold the blade steady.

4. Remove the blade, saving all mounting hardware.

5. Install the new blade and all mounting hardware.

Important: Position the curved ends of the blade to point toward the mower housing.

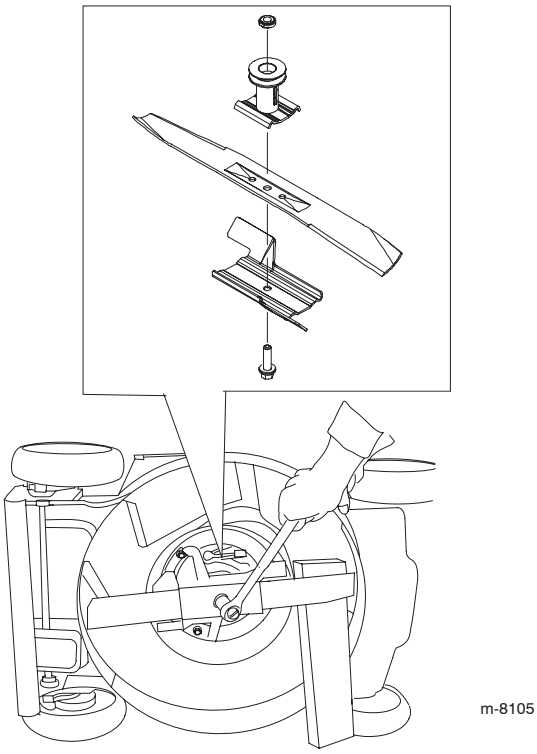

m-8105

6. **Use a torque wrench** to tighten the blade bolt to 60 ft-lb (82 N·m).

Important: **A bolt torqued to 60 ft-lb (82 N·m) is *very* tight. While holding the blade with a block of wood, put your weight behind the ratchet or wrench and tighten the bolt securely. This bolt is very difficult to overtighten.**

Cleaning the Mower

1. With the engine running on a flat paved surface, spray a stream of water in front of the **right rear** wheel.



1093

The water will splash into the path of the blade, cleaning out the clippings.

2. When no more clippings come out, stop the water and move the mower to a dry area.

3. Run the engine for a few minutes to dry the housing to prevent it from rusting.

Storage

Store the mower in a cool, clean, dry place.

Preparing the Mower for Storage

Warning

Gasoline vapors can explode.

- **Do not store gasoline more than 30 days.**
- **Do not store the mower in an enclosure near an open flame.**
- **Allow the engine to cool before storing it.**

1. On the last refueling of the year, add fuel stabilizer to the fuel as directed by the engine manufacturer.

2. Run the mower until the engine stops from running out of fuel.

3. Prime the engine and start it again.

4. Allow the engine to run until it stops. When you can no longer start the engine, it is sufficiently dry.

5. Remove the wire from the spark plug and connect the wire onto the retaining post.

6. Remove the spark plug, add 1 oz. (30 ml) of oil through the spark plug hole, and pull the starter rope **slowly** several times to distribute oil throughout the cylinder to prevent cylinder corrosion during the off-season.

7. Loosely install the spark plug.

8. Tighten all nuts, bolts, and screws.

Folding the Handle

1. Remove the lower handle knobs and detach the lower handle brackets (A) from the lower end of both handle sides.

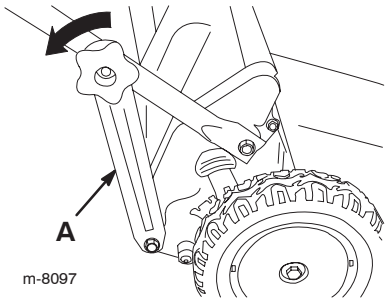

Note: Attach the lower handle knobs onto the bolts in the handle to prevent losing them.

2. Rotate the handle forward.

A.

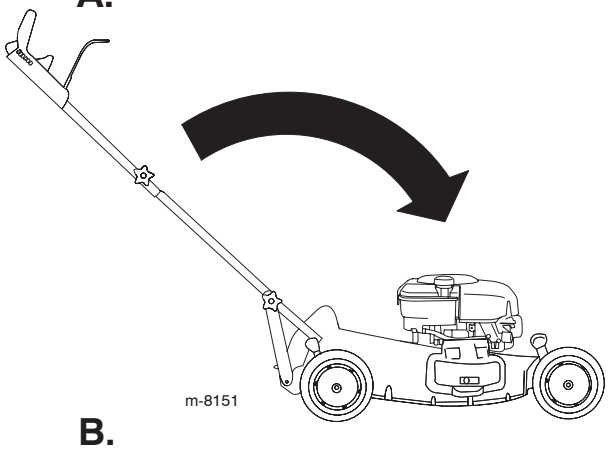

B.

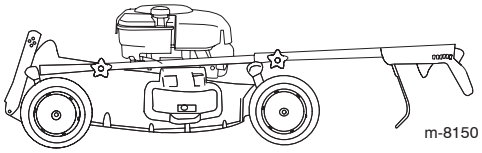

3. To unfold the handle, refer to Unfolding the Handle on page 4.

Removing the Mower from Storage

1. Remove the spark plug and pull the recoil start handle a few times to blow the excess oil from the cylinder.

2. Install the spark plug and tighten it with a torque wrench to 15 ft-lb (20 N·m).

3. Connect the wire to the spark plug.

The Toro Starting Guarantee

A Five-Year Full Warranty on All
Toro GTS®-5 Engines

Conditions and Products Covered

The Toro Company and its affiliate, Toro Warranty Company, pursuant to an agreement between them, jointly guarantee that your Toro Engine will start on the first or second pull for five years from the date of purchase—if you provide the routine maintenance it requires—or we will fix it free of charge. This warranty covers the cost of parts and labor, but you must pay transportation costs. This covers Toro rotary mower and snow product engines.

Instructions for Obtaining Warranty Service

If a normal, able-bodied adult can no longer start your product's engine in one or two pulls, follow this procedure:

1. Contact any Toro Authorized or Master Service Dealer to arrange service at their dealership. To locate a dealer convenient to you, refer to the Yellow Pages of your telephone directory (look under "Lawn Mowers") or access our website at www.Toro.com. U.S. Customers may also call 800-421-9684 to use our 24-hour Toro dealer locator system.
2. Bring the product, your maintenance records, and your proof of purchase (sales receipt) to the Service Dealer.

If for any reason you are dissatisfied with the Service Dealer's analysis or with the assistance provided, contact us at:

Customer Care Department, Consumer Division
Toro Warranty Company
8111 Lyndale Avenue South
Bloomington, MN 55420-1196
800-348-2424 (U.S. customers)
877-484-9255 (Canada customers)

Owner Responsibilities

You must maintain your Toro Engine by following the maintenance schedule detailed in the operator's manual. You must record this work in the maintenance chart provided in your operator's manual and keep your proof of purchase. Such routine maintenance, whether performed by a dealer or by you, is at your expense.

Items and Conditions Not Covered

There is no other express warranty except for The Toro Total Coverage Guarantee and special emission system coverage on some products. This warranty does not cover the following:

- Any repairs on products used commercially
- Normal maintenance including replacement of spark plugs, air filter, fuel filter, and carburetor adjustments
- Oil change and lubrication
- Repairs or adjustments due to the following:
  - failure to follow proper maintenance procedures
  - rotary mower blade or snowthrower auger/paddles striking an object
  - contaminants in the fuel system
  - improper fuel or fuel mixture (consult your operator's manual if in doubt)
  - failure to drain the fuel system prior to any period of non-use over three months
  - operation misuse, neglect, or accidents
  - repairs or attempted repairs by anyone other than an Authorized Service Dealer
- Special operational conditions where starting may require more than two pulls, including the following:
  - first time starts after extended period of non-use or seasonal storage
  - cool temperature starts such as those found in early spring and late autumn (applies to rotary products only)
  - improper starting procedures

    If you are having difficulty starting your unit, please check the operator's manual to ensure that you are using the correct starting procedures. This can save an unnecessary visit to a Service Dealer.

All warranty repairs reimbursable under this warranty must be performed by an Authorized Toro Service Dealer using Toro approved replacement parts.

General Conditions

Repair by an Authorized Toro Service Dealer is your sole remedy under this warranty.

Neither The Toro Company nor Toro Warranty Company is liable for indirect, incidental or consequential damages in connection with the use of the Toro Products covered by this warranty, including any cost or expense of providing substitute equipment or service during reasonable periods of malfunction or non-use pending completion of repairs under this warranty.

This warranty gives you specific legal rights, and you may also have other rights which vary from state to state.

Guaranteed to Start Maintenance Record

To keep the starting guarantee in effect, you must perform the following maintenance according to the recommended maintenance schedule. Follow the procedures in this operator's manual and record all maintenance activities on this chart.

Date	Hours Used	Air Cleaner Service (mowers only)	Change Oil (does not apply to two-cycle)	Lubricate Wheels (mowers only)	Check Spark Plug	Storage Preparation

Date	Hours Used	Air Cleaner Service (mowers only)	Change Oil (does not apply to two-cycle)	Lubricate Wheels (mowers only)	Check Spark Plug	Storage Preparation

Gas, Cordless, Electric, and 21″ Commercial Duty Walk Mowers

The Toro Total Coverage Guarantee

A Full Warranty
(Limited Warranty for Commercial Use)

Conditions and Products Covered

The Toro Company and its affiliate, Toro Warranty Company, pursuant to an agreement between them, jointly promise to repair any Toro Product used for normal residential purposes* if defective in materials or workmanship or if it stops functioning due to the failure of a component. The following time periods apply from the date of purchase:

Products	Warranty Period
• Super Recycler® Walk Mowers	5 year full warranty
• All Other Mowers	2 year full warranty
• All Batteries	1 year full warranty

This warranty includes the cost of parts and labor, but you must pay transportation costs.

This warranty applies to all gas, cordless, and electric consumer walk power mowers.

* Normal residential purposes means use of the product on the same lot as your home. Use at more than one location is considered commercial use, and the commercial use warranty would apply.

Limited Warranty for Commercial Use

Toro Walk Power Mowers used for commercial, institutional, or rental use are warranted against defects in materials or workmanship. Components failing due to normal wear are not covered by this warranty. The following time periods apply from the date of purchase:

Products	Warranty Period	
	Engine	Entire Unit
• 21″ Commercial Duty Walk Mowers	2 year limited	1 year limited
• All Other Mowers	45 day limited	45 day limited

Instructions for Obtaining Warranty Service

If you think that your Toro Product contains a defect in materials or workmanship, follow this procedure:

1. Contact any Toro Authorized or Master Service Dealer to arrange service at their dealership. To locate a dealer convenient to you, refer to the Yellow Pages of your telephone directory (look under “Lawn Mowers”) or access our website at www.Toro.com. U.S. Customers may also call 800-421-9684 to use our 24-hour Toro dealer locator system.
2. Bring the product and your proof of purchase (sales receipt) to the Service Dealer.

If for any reason you are dissatisfied with the Service Dealer’s analysis or with the assistance provided, contact us at:

Customer Care Department, Consumer Division
Toro Warranty Company
8111 Lyndale Avenue South
Bloomington, MN 55420-1196
800-348-2424 (U.S. customers)
877-484-9255 (Canada customers)

Owner Responsibilities

You must maintain your Toro Product by following the maintenance procedures described in the operator’s manual. Such routine maintenance, whether performed by a dealer or by you, is at your expense.

Items and Conditions Not Covered

There is no other express warranty except for special emission system coverage on some products and the Toro Starting Guarantee on GTS Engine. This express warranty does not cover:

- Cost of regular maintenance service or parts, such as filters, fuel, lubricants, oil changes, spark plugs, blade sharpening, worn blade, cable/linkage adjustments, or brake and clutch adjustments
- Any product or part which has been altered or misused or required replacement or repair due to accidents or lack of proper maintenance
- Repairs necessary due to improper fuel, contaminants in the fuel system, or failure to properly prepare the fuel system prior to any period of non-use over three months
- Repairs necessary due to improper battery care, electrical supply irregularities, or failure to properly prepare the mower prior to any period of non-use
- Pickup and delivery charges

All repairs covered by this warranty must be performed by an Authorized Toro Service Dealer using Toro approved replacement parts.

General Conditions

Repair by an Authorized Toro Service Dealer is your sole remedy under this warranty.

Neither The Toro Company nor Toro Warranty Company is liable for indirect, incidental or consequential damages in connection with the use of the Toro Products covered by this warranty, including any cost or expense of providing substitute equipment or service during reasonable periods of malfunction or non-use pending completion of repairs under this warranty.

Some states do not allow exclusions of incidental or consequential damages, or limitations on how long an implied warranty lasts, so the above exclusions and limitations may not apply to you.

This warranty gives you specific legal rights, and you may also have other rights which vary from state to state.

Countries Other than the United States or Canada

Customers who have purchased Toro products exported from the United States or Canada should contact their Toro Distributor (Dealer) to obtain guarantee policies for your country, province, or state. If for any reason you are dissatisfied with your Distributor’s service or have difficulty obtaining guarantee information, contact the Toro importer. If all other remedies fail, you may contact us at Toro Warranty Company.

Part No. 374-0000 Rev. B