FORM NO. 3312-997

TORO®

MODEL NO. 38150 — 7000001 & UP

PARTS CATALOG

826 SNOWTHROWER

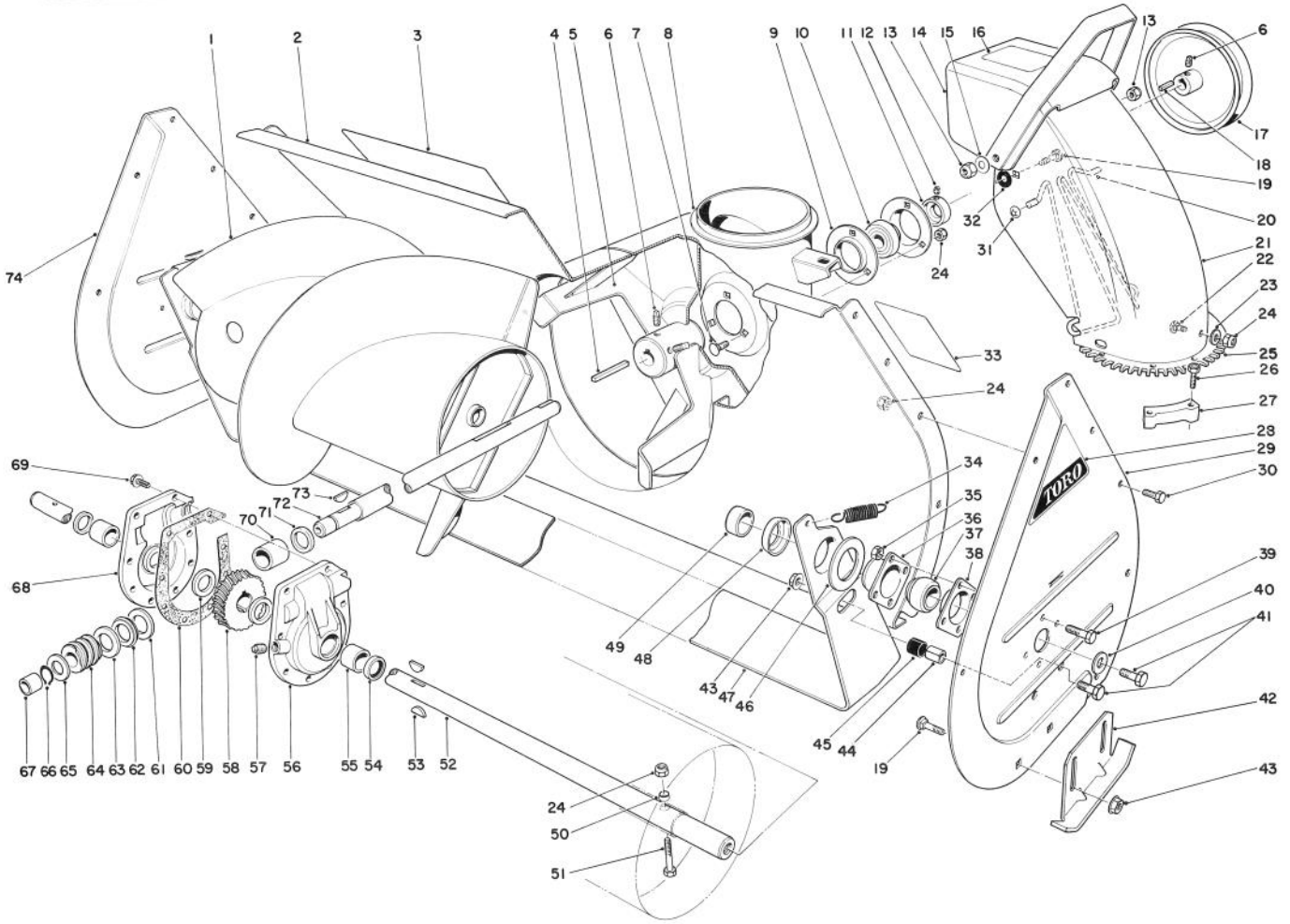

AUGER ASSEMBLY

Ref. No.	Part No.	Description	No. Used
1	26-6160	Auger R.H.	1
*	26-6170	Auger L.H.	1
2	25-5100	Auger Housing	1
3	54-9910	Decal — Auger Warning	1
4	6-8590	Key — Impeller	1
5	19-8890	Impeller	1
6	3242-4	Set Screw	4
7	3230-1	Carriage Bolt	3
8	25-5170	Chute Ring	1
9	251-229	Bearing Flange	2
10	251-224	Bearing — Impeller	1
11	251-231	Locking Collar	1
12	3245-32	Set Screw	2
13	32152-2	Locknut	2
14	11-9349	Deflector (Incl. Ref. #16)	1
15	3290-340	Washer Belleville	2

Ref. No.	Part No.	Description	No. Used
16	53-7660	Decal — Discharge	1
17	5-7400	Pulley Impeller	1
18	3-6857	Key	1
19	3231-27	Carriage Bolt	6
20	54-9770	Chute Wire	1
21	56-2600	Upper Chute	1
22	3230-18	Carriage Bolt	3
23	3256-23	Washer	3
24	3296-29	Locknut	18
25	25-5290	Swivel Plate	1
26	27-0220	Screw Special	6
27	25-5450	Swivel Block	3
28	17-6500	Decal — Auger Side Plate	2
29	39-6130	Sideplate Auger L.H.	1
30	322-2	Capscrew	10
31	3290-326	Pushnut	2

*Not Illustrated

©The Toro Company — 1986

PRICE $1.00

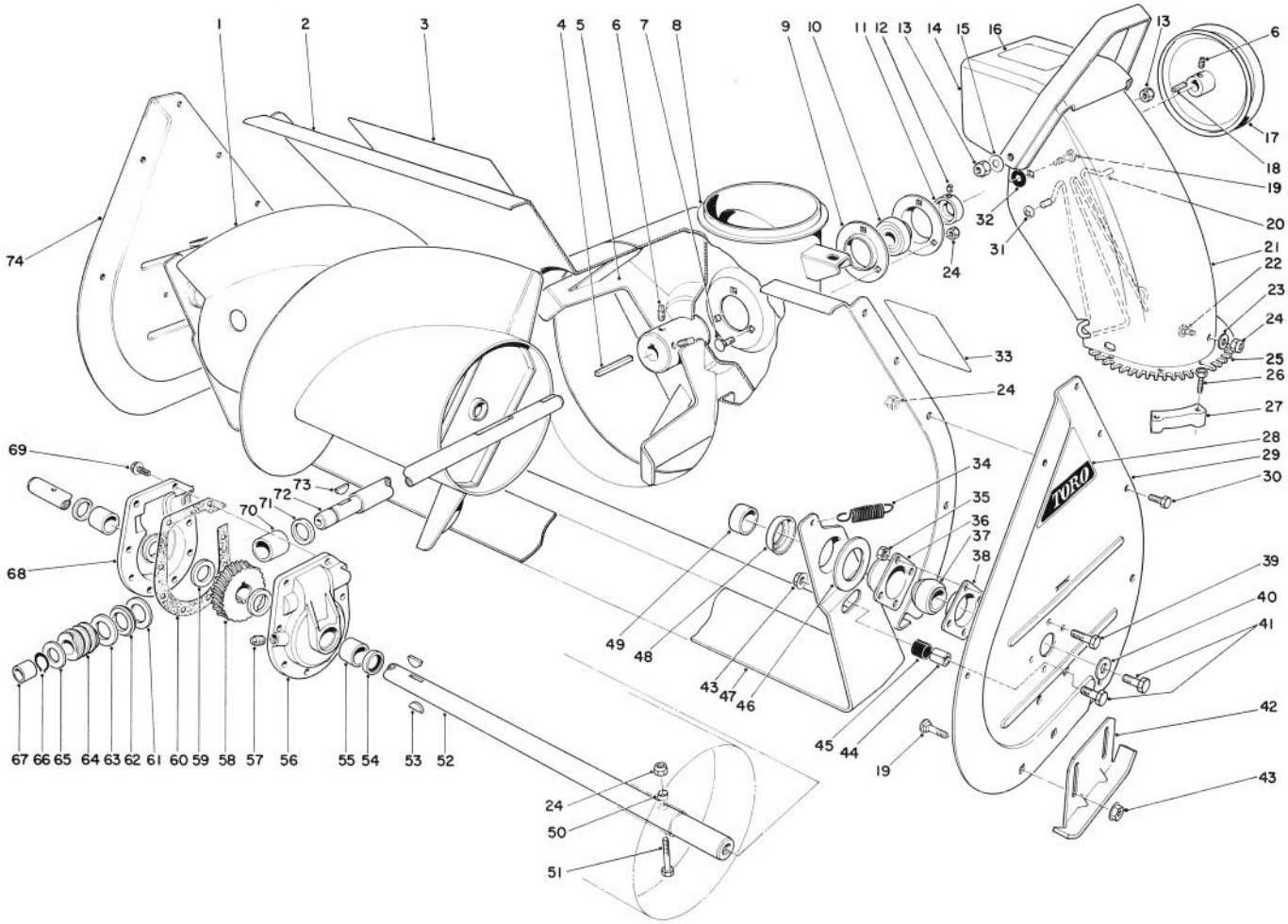

AUGER ASSEMBLY (Continued)

Ref. No.	Part No.	Description	No. Used
32	20-4320	Washer Rubber	2
33	53-7670	Decal — Auger Warning	1
34	5-7290	Spring Scraper	2
35	32152-4	Locknut	8
36	20-0990	Flange Bearing Front	2
37	20-0980	Bearing	2
38	20-1000	Flange Bearing Rear	2
39	321-3	Capscrew	8
40	3-0750	Flat Washer	2
41	323-6	Capscrew	4
42	20-2840	Auger Skid	2
43	32128-21	Locknut	6
44	25-5140	Standoff — Scraper Stop	2
45	25-5150	Bumper — Scraper Stop	2
46	20-0300	Spacer — Scraper Blade	2
47	19-9140	Scraper Blade	1
48	26-6400	Positioner — Scraper Blade	2
49	26-6390	Spacer Auger	2
50	25-5090	Spacer Auger Hub	2
51	17-7030	Bolt Auger	2
52	11-7000	Shaft Auger	1
53	3257-33	Key Woodruff	2
54	7-0045	Oil Seal	2
55	256-237	Bushing	2

Ref. No.	Part No.	Description	No. Used
56	37-8860	Bear Case L.H. (Incl. Ref. #54-55)	1
57	281-1	Pipe Plug	1
58	5-7180	Gear Worm	1
59	252-71	Thrust Bearing	2
60	51-0460	Gasket	1
61	252-78	Thrust Washer	1
62	252-76	Thrust Bearing	1
63	252-77	Thrust Washer	1
64	5-7170	Worm	1
65	3-8664	Thrust Washer	1
66	32120-72	Retaining Ring	1
67	256-32	Bushing	1
68	37-8850	Gear Case R.H. (Incl. Ref. #54-55)	1
69	32144-41	Thread Forming Screw	8
70	20-3210	Bushing	1
71	237-87	Seal	1
72	19-8540	Shaft Impeller	1
73	3257-23	Key Woodruff	1
74	39-6120	Sideplate Auger R.H.	1
*	19-6990	Gear Case Assembly Complete (Incl. Ref. #52-73)	1
*†	20-0640	Drift Breaker Kit	1

*Not Illustrated

†Optional Equipment

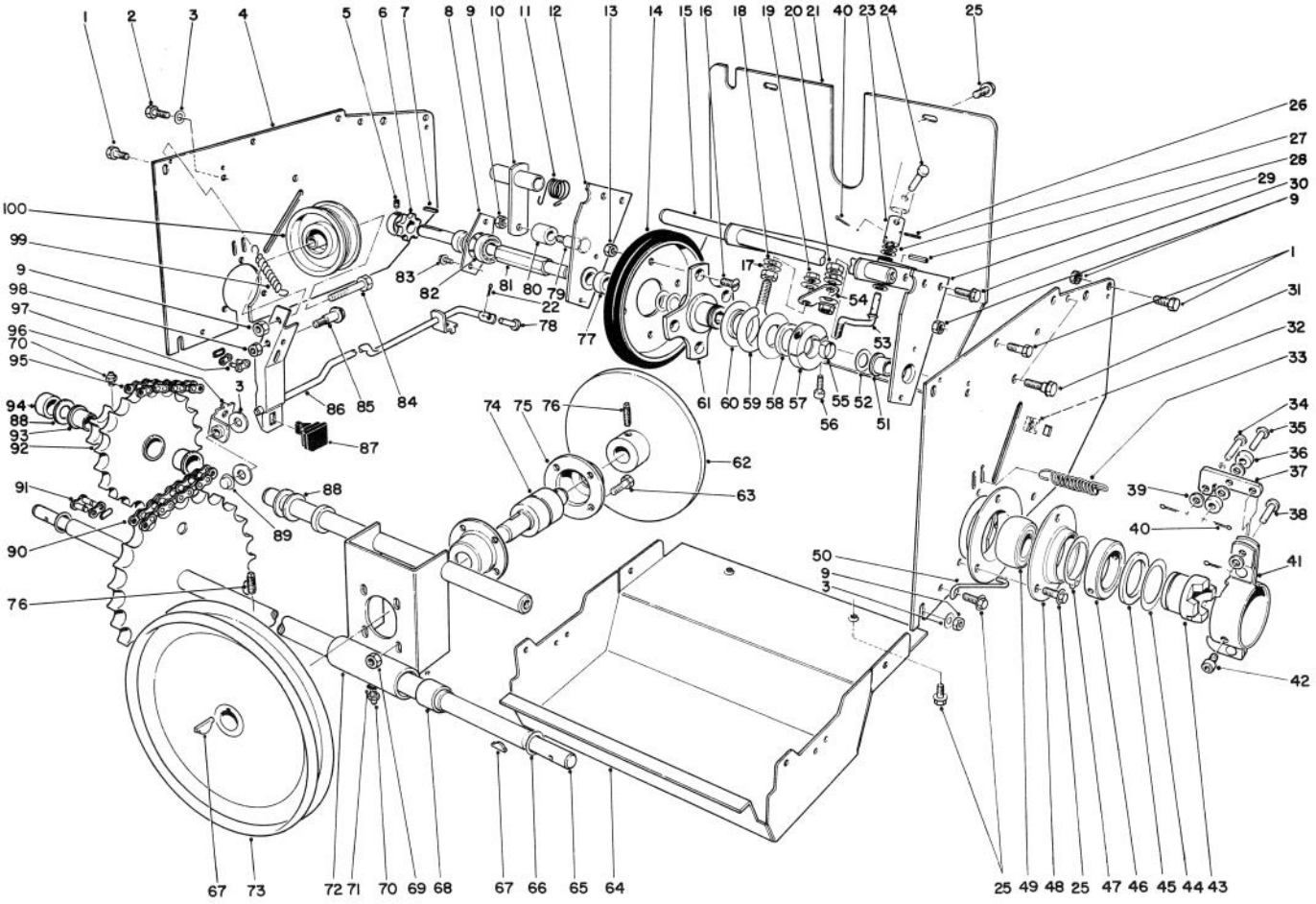

TRACTION ASSEMBLY

Ref. No.	Part No.	Description	No. Used
1	323-6	Capscrew	5
2	32144-69	Hex Thread Forming Screw	2
3	3256-25	Washer	5
4	22-7990	Side Plate Drive	2
5	3245-32	Set Screw	2
6	5-9820	Sprocket	1
7	3-6168	Square Key	1
8	22-8950	Bearing Cup	1
9	3296-39	Hex Locknut	9
10	26-6470	Chain Tensioning Arm	1
11	26-8950	Spring — Chain Tensioner	1
12	26-6070	Mount — Hex Shaft R.H.	1
13	3296-47	Locknut	4
14	40-8170	Disc Assembly	1
15	11-8010	Bracket — Dead Shaft	1
16	32108-94	Screw — Flat Head	4
17	3256-45	Washer	2
18	3290-301	Spring Washer	4
19	32128-12	Flange Nut	2
20	3296-6	Locknut	2
21	8-7950	Rear Shield	1
22	3272-9	Cotter Pin	1
23	11-8070	Tube — "U" Joint	1
24	283-31	Clevis Pin	1
25	32144-10	Screw — Thread Forming	14
26	32121-50	Roll Pin	2
27	252-89	Thrust Washer	3

Ref. No.	Part No.	Description	No. Used
28	32121-11	Roll Pin	2
29	26-6330	Hex Shaft Mounting (Incl. Ref. #51)	1
30	32144-11	Screw — Thread Forming	4
31	11-8140	Shoulder Screw	4
32	3290-433	Retained Nut	2
33	10-3890	Spring — Extension	2
34	283-29	Clevis Pin	2
35	283-17	Clevis Pin	2
36	10-3910	Roller — Clutch	4
37	20-1050	Arm — Clutch Cam	2
38	283-16	Clevis Pin	2
39	3256-14	Washer	10
40	3272-5	Cotter Pin	7
41	20-2290	Clutch Mounting Bracket	2
42	3274-42	Hex Socket Capscrew	4
43	26-5990	Wheel Clutch	2
44	10-3980	Thrust Washer	2
45	256-214	Thrust Bearing	2
46	10-3860	Collar — Clutch Mounting	2
47	32151-35	Ring — Retainer	2
48	20-1020	Bearing Flange	4
49	20-1010	Bearing Axle	2
50	41-8570	Retainer — Clutch	2
51	256-219	Bushing	1
52	5-7570	Washer — Friction Wheel Shaft	3
53	11-8090	Rod — Connecting	1

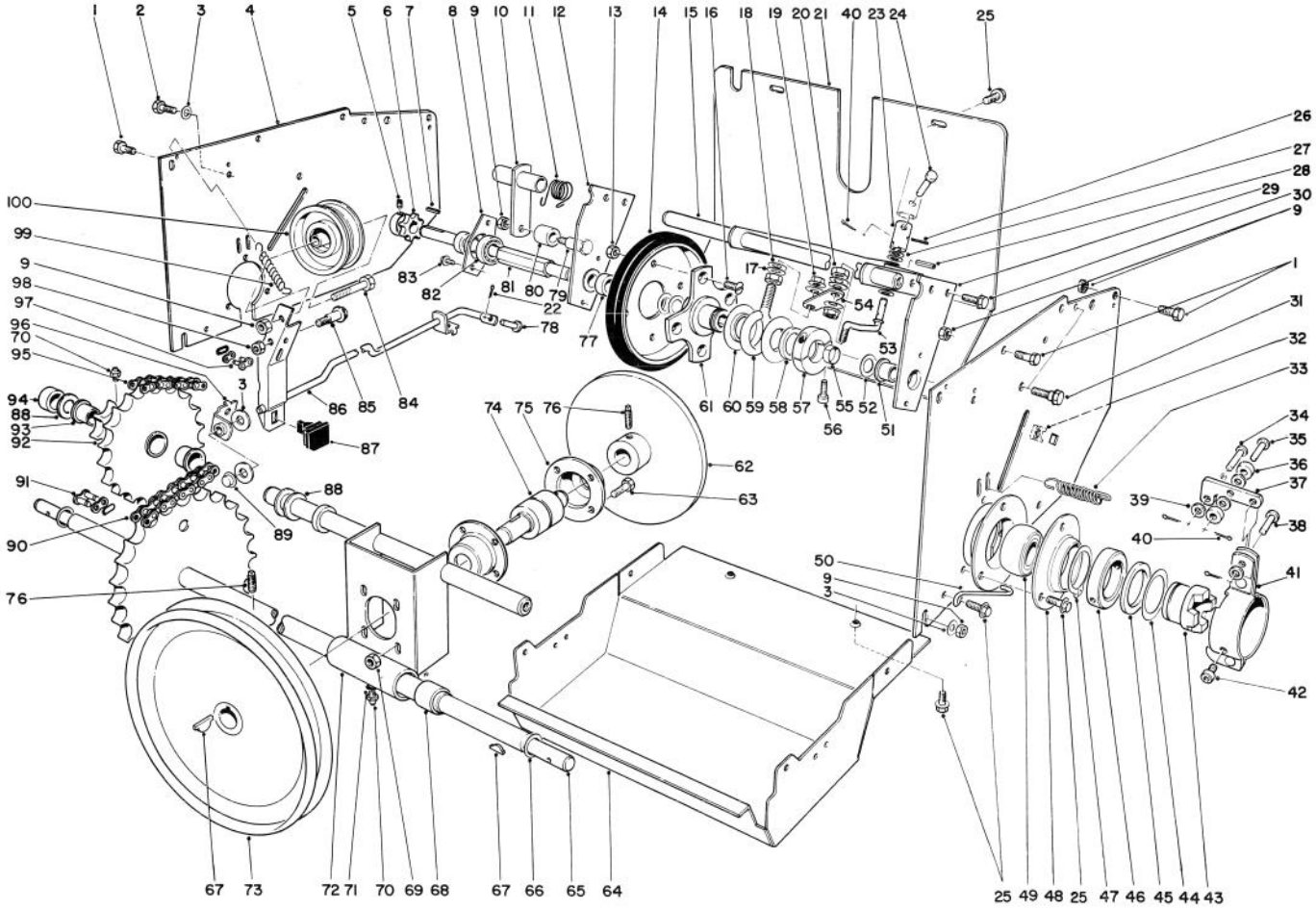

TRACTION ASSEMBLY (Continued)

Ref. No.	Part No.	Description	No. Used
54	11-8060	Pivot — Shift Rod	1
55	11-3180	Spacer — Split	1
56	3274-26	Hex Socket Capscrew	2
57	20-4610	Collar	1
58	252-71	Thrust Bearing	1
59	11-8050	Slider Ring Collar	1
60	11-8080	Ring — Slider	2
61	20-3310	Hub — Traction Disc	1
62	23-4970	Friction Plate	1
63	322-3	Capscrew	4
64	11-7140	Shield — Lower	1
65	26-5950	Axle Shaft	1
66	3-0737	Thrust Washer	2
67	3257-23	Key — Hi Pro	6
68	256-269	Bushing	2
69	32149-1	Locknut	4
70	302-5	Grease Fitting	2
71	3254-8	Internal Tooth Lockwasher	1
72	25-5190	Bulkhead (Incl. Ref. #68)	1
73	5-7410	Pulley — Drive	1
74	23-4950	Friction Plate Shaft	1
75	10-0070	Bearing Housing	2
76	3242-4	Set Screw	4
77	22-9190	Spacer	2
78	283-6	Clevis Pin	1

Ref. No.	Part No.	Description	No. Used
79	7-0846	Shoulder Bolt	1
80	26-8940	Roller — Chain Tensioner	1
81	11-8940	Shaft — Friction Wheel	1
82	251-260	Bearing	1
83	12-3270	Hex Washer Head Thread Forming Screw	2
84	323-8	Capscrew	1
85	42-3560	Bolt — Shoulder	1
86	8-9139	Auger Brake Assembly (Incl. Ref. #87)	1
87	40-8140	Brake Pad — Molded	1
88	3-8664	Thrust Washer	3
89	3290-383	Pushnut	1
90	23-7260	Lower Chain (Incl. Ref. #91)	1
91	2710-11	Connecting Link	1
92	8-8709	Sprocket (Incl. Ref. #70 & 93)	1
93	256-215	Bushing	2
94	23-7250	Spacer	1
95	5-9430	Upper Chain (Incl. Ref. #97)	1
96	20-2940	Bracket — Clutch Rod	1
97	2710-6	Connecting Link	1
98	32152-4	Nut — Lock	1
99	53-7620	Spring — Auger	1
100	3-4244	Pulley — Idler	1

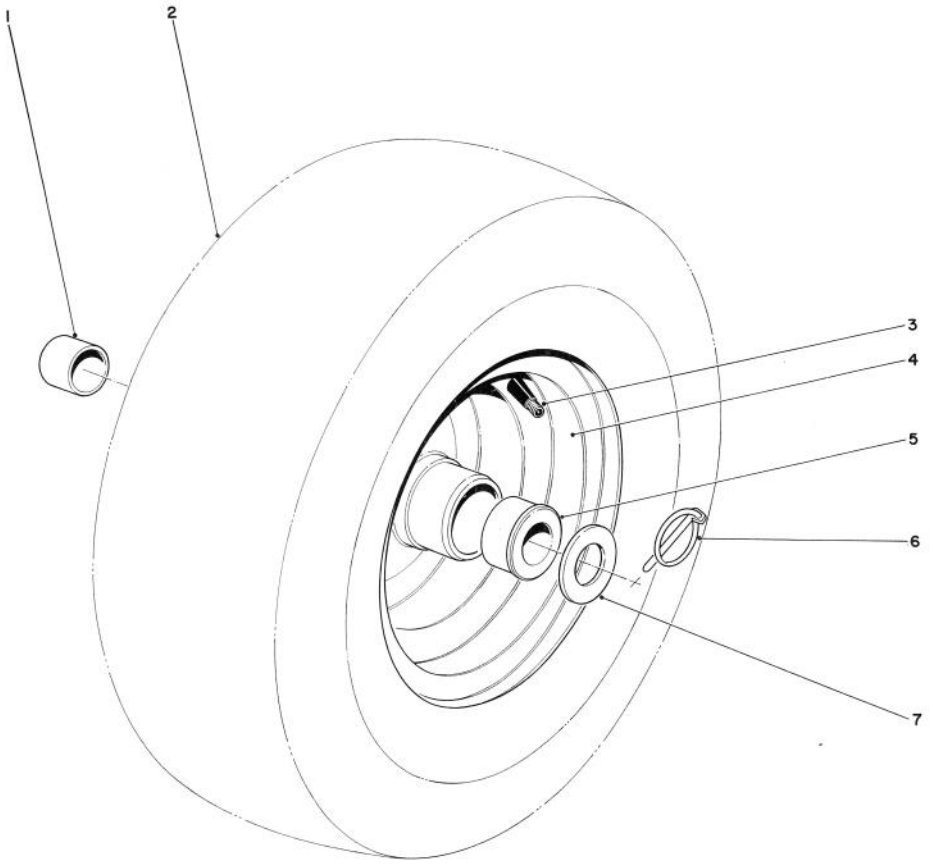

WHEEL ASSEMBLY

Ref. No.	Part No.	Description	No. Used
1	256-205	Bushing	2
2	231-92	Tire	2
3	232-27	Valve Stem	2
4	26-9880	Wheel & Hub Assembly (Incl. Ref. # 1 & 5)	2

Ref. No.	Part No.	Description	No. Used
5	256-117	Wheel Bushing	2
6	3290-243	Klip Pin	2
7	3-8664	Thrust Washer	2
*	23-2340	Tire Chain Optional (Set of 2)	1
*†	232-3	Inner Tube	2

*Not Illustrated
†Service Replacement Part

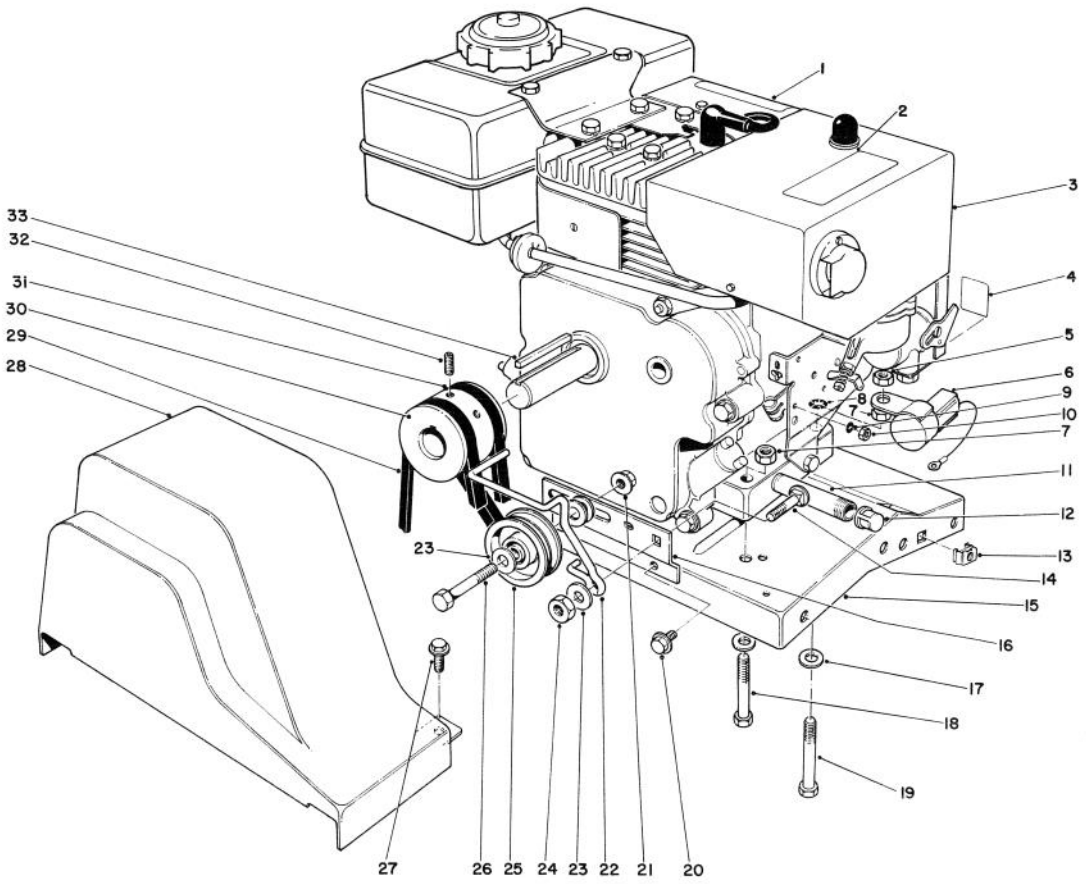

ENGINE ASSEMBLY

Ref. No.	Part No.	Description	No. Used
1	54-9750	Decal — Hazards Caution	1
2	53-7680	Decal — Hot Surface Warning	1
3		Engine	1
4	29-6400	Decal — Choke	1
5	32153-3	Locknut	1
6	41-8610	Interlock Module	1
7	3296-29	Locknut	4
8	3254-2	Int. Tooth Lockwasher	1
9	3254-10	Int. Tooth Lockwasher	1
10	3296-54	Locknut	1
11	289-20	Pipe Nipple	1
12	288-4	Pipe Cap	1
13	3290-433	Retained Nut	2
14	3231-27	Carriage Bolt	1
15	22-9030	Engine Base	1
16	41-8580	Bracket — Belt Idler	1
17	3256-23	Washer	4

Ref. No.	Part No.	Description	No. Used
18	322-9	Capscrew	3
19	322-10	Hex. Hd. Capscrew	1
20	32144-69	Hex Forming Screw	2
21	3290-357	Locknut	1
22	41-8590	Belt Guide	1
23	3256-24	Washer	3
24	3296-39	Locknut	1
25	244-63	Idler Pulley	1
26	323-8	Capscrew	1
27	32144-10	Self Tapping Screw	2
28	17-6550	Belt Guard	1
29	26-9670	V-Belt, Auger	1
30	21-4100	Engine Pulley	1
31	17-6540	V-Belt, Traction	1
32	3246-18	Set Screw	2
33	5-0930	Key	1

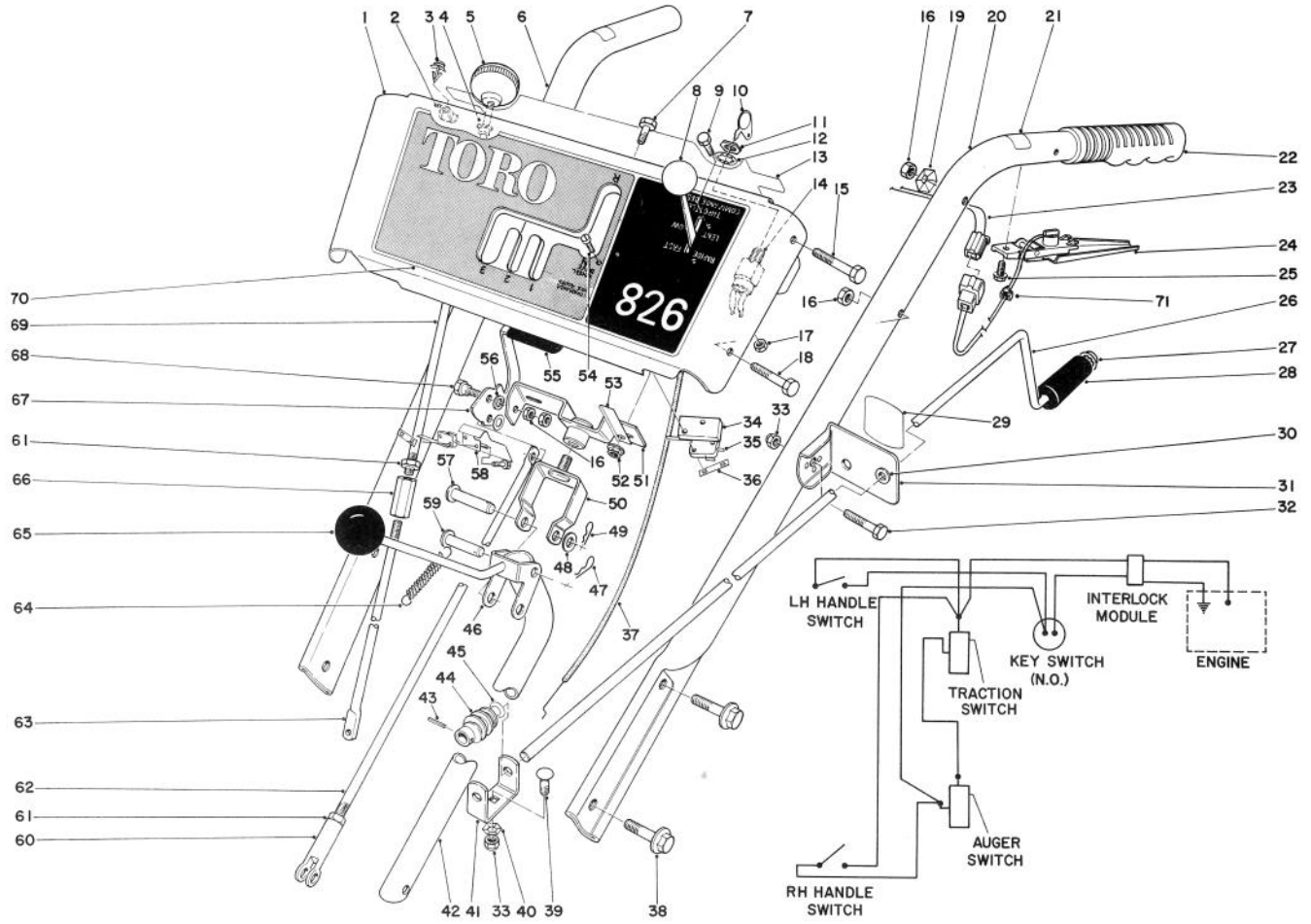

HANDLE ASSEMBLY

Ref. No.	Part No.	Description	No. Used
1	8-1559	Escutcheon Plate (Incl. Ref. #13 & 70)	1
2	43-7450	Clamp — Wire	2
3	43-7460	Mounting Stud	2
4	256-240	Nyliner	2
5	233-10	Knob	2
6	40-8460	Handle — Right	1
7	321-3	Capscrew	2
8	233-36	Knob	1
9	32140-99	Hex Head Screw	2
10	33-2010	Keys	2
11	218-461	Hex Nut	1
12	3254-5	Lockwasher	1
13	29-6330	Decal — Escutcheon Back	1
14	40-8240	Key Switch (Incl.Ref. #11 & 12)	1
15	321-11	Capscrew	2
16	32152-4	Locknut	8
17	3296-2	Locknut	2
18	321-9	Capscrew	2
19	3290-257	Washer Pyramidal	2
20	40-8450	Handle — Left	1
21	29-6360	Decal — Safety Interlock	2

Ref. No.	Part No.	Description	No. Used
22	6-0450	Handle Grip	2
23	40-8640	Wire Harness	1
24	40-9690	Interlock Handle & Switch (Incl. Ref. #71)	2
25	12-3270	Screw — Special	2
26	41-8640	Rod — Chute Control	1
27	3290-320	Push-On Speed Nut	1
28	40-8230	Chute Control Grip	1
29	29-6370	Decal — Chute Direction	1
30	256-249	Nyliner	1
31	6-3069	Bracket — Chute Control Mtg. (Incl. Ref. #29 & 30)	1
32	322-9	Capscrew	1
33	3296-29	Locknut	2
34	22-7950	Pad — Switch Mounting	1
35	40-8200	Micro Switch	2
36	3290-354	Speed Nut	2
37	8-7790	Throttle Control	1
38	3234-1	Flange Screw	4
39	3230-2	Carriage Bolt	1
40	3290-238	Pyramidal Washer	1
41	11-7110	Bracket — Worm	1
42	29-6450	Rod — Traction Shift	1

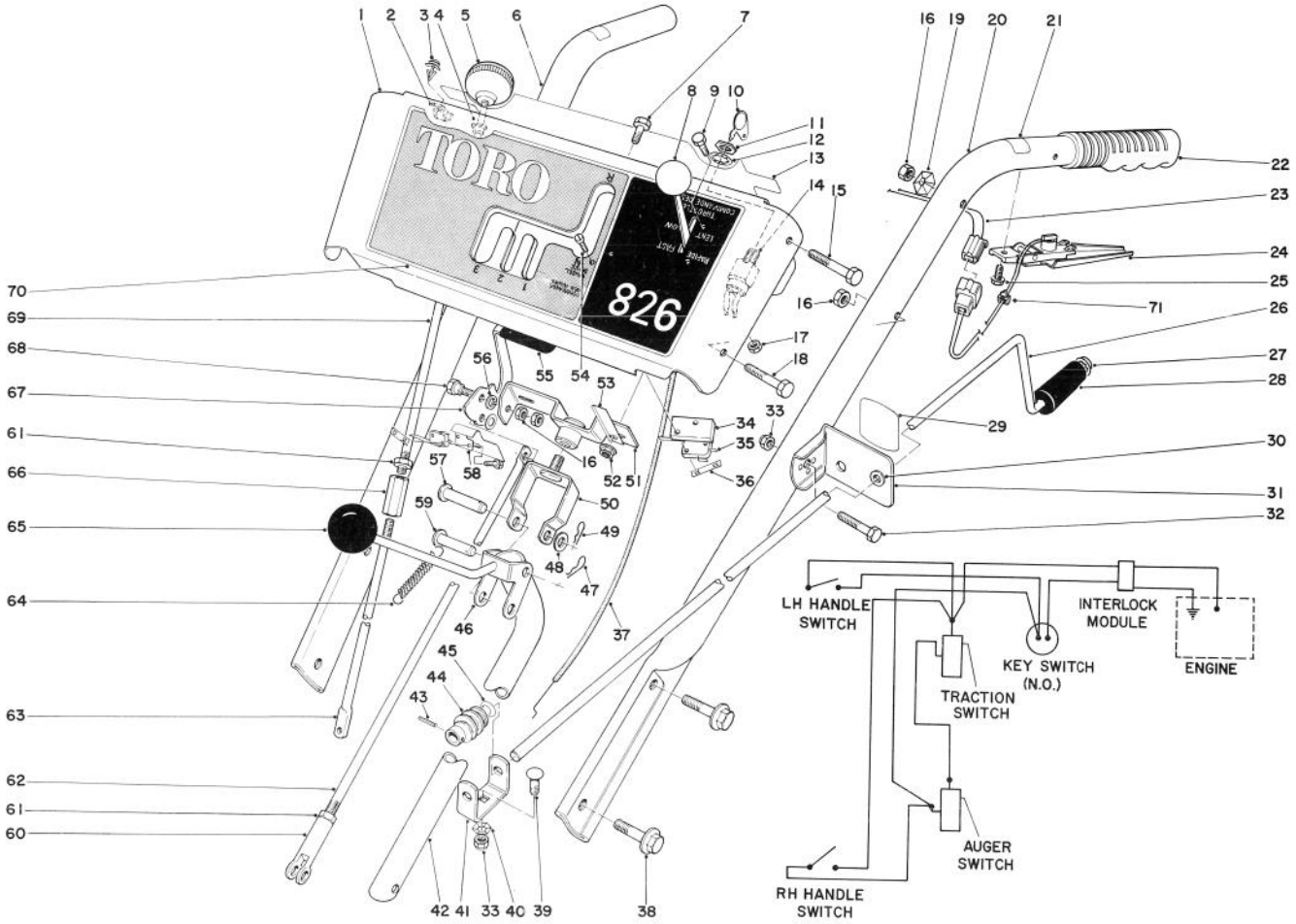

HANDLE ASSEMBLY (Continued)

Ref. No.	Part No.	Description	No. Used
43	32121-50	Roll Pin	1
44	8-8600	Worm Gear — Chute	1
45	3290-212	Spring Washer	1
46	26-9370	Shift Rod	1
47	3290-307	Hair Pin Cotter	1
48	3256-6	Washer	1
49	3290-322	Hair Pin Cotter	1
50	29-6490	Pivot Bracket	1
51	8-7930	Swivel Block	1
52	32128-10	Flange Locknut	2
53	26-9410	Retainer — Wire	1
54	3290-313	Machine Screw	4
55	11-8970	Grip — Auger Handle	1
56	3256-23	Washer	2
57	283-5	Clevis Pin	1
58	22-9300	Bracket — Switch	1

Ref. No.	Part No.	Description	No. Used
59	283-15	Clevis Pin	1
60	39-4640	Clevis	1
61	3220-3	Jam Nut	3
62	29-6460	Drag Link	1
63	22-7970	Rod — Wheel Clutch, Lower	2
64	8-9900	Spring — Control Rod	1
65	233-21	Knob	1
66	22-7940	Coupling — Wheel Clutch Rod	2
67	17-6620	Handle — Auger Clutch	1
68	11-9030	Shoulder Bolt	2
69	29-6470	Rod — Wheel Clutch	2
70	29-6310	Decal — Escutcheon	1
71	17-9120	Mount — Wire	6
*	3290-378	Cable Tie	2
*	36-0950	Traction Shift Rod Assembly (Incl. Ref. #42, 46, 47 & 49)	1

*Not Illustrated

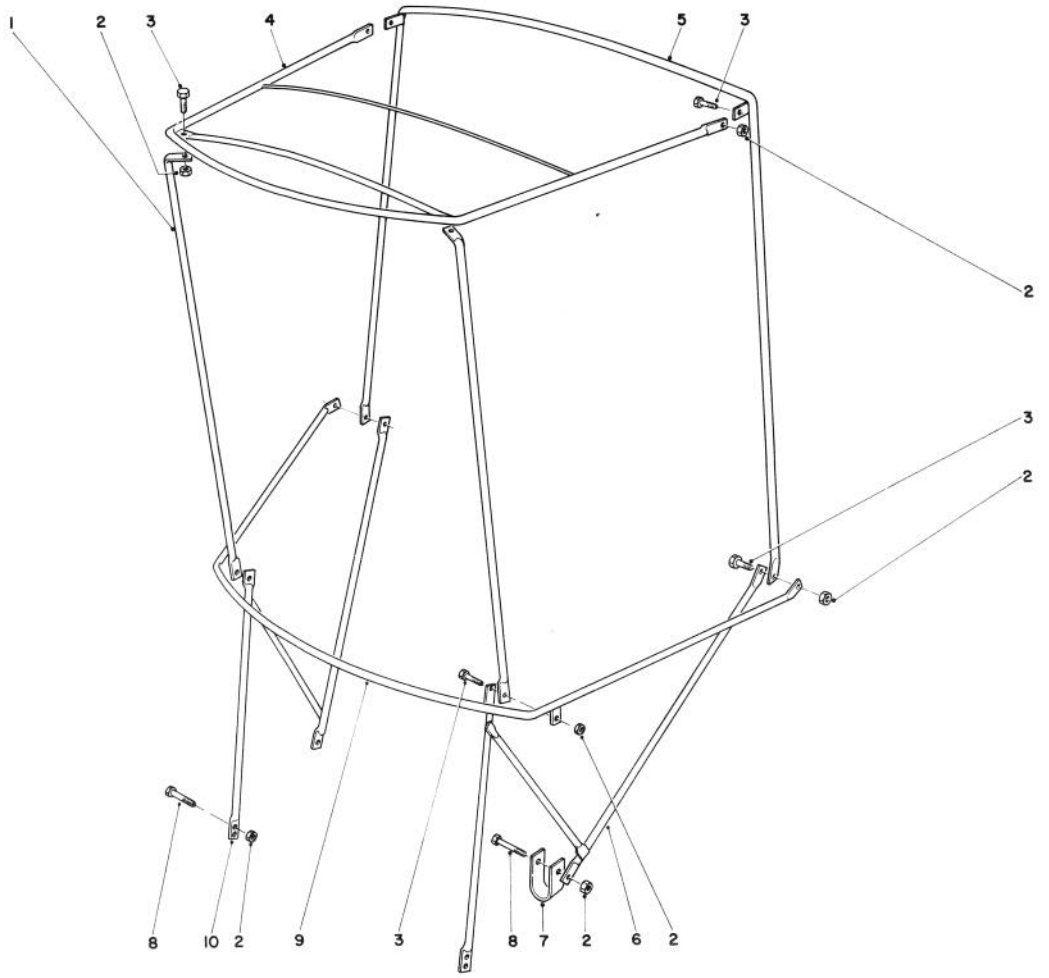

SNOW CAB ASSEMBLY MODEL 42-3380 (Optional)

Ref. No.	Part No.	Description	No. Used
1	12-8040	Front Corner Post	2
2	32153-4	Locknut	12
3	321-4	Capscrew	8
4	12-8010	Top Frame	1
5	12-8030	Rear Vertical Bow	1
6	42-4060	Attaching Bracket L.H.	1

Ref. No.	Part No.	Description	No. Used
7	12-8050	"U" Clamp	2
8	321-11	Capscrew	4
9	12-8020	Horizontal Curved Bow	1
10	42-4050	Attaching Bracket R.H.	1
*		Vinyl Cover	1

*Not Illustrated

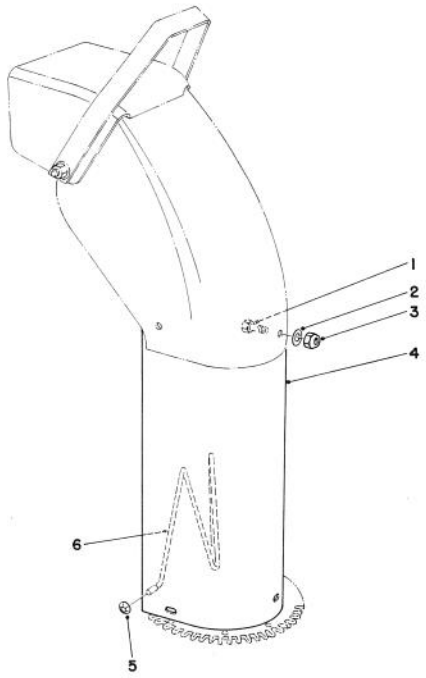

CHUTE EXTENSION KIT 26-1100 (Optional)

Ref. No.	Part No.	Description	No. Used
1	322-2	Hex Hd. Capscrew	6
2	3256-23	Washer	6
3	32152-1	Locknut	6
4	26-1110	Upper Chute Extender	1
5	3290-326	Pushnuts	2
6	12-2040	Wire Chute	1

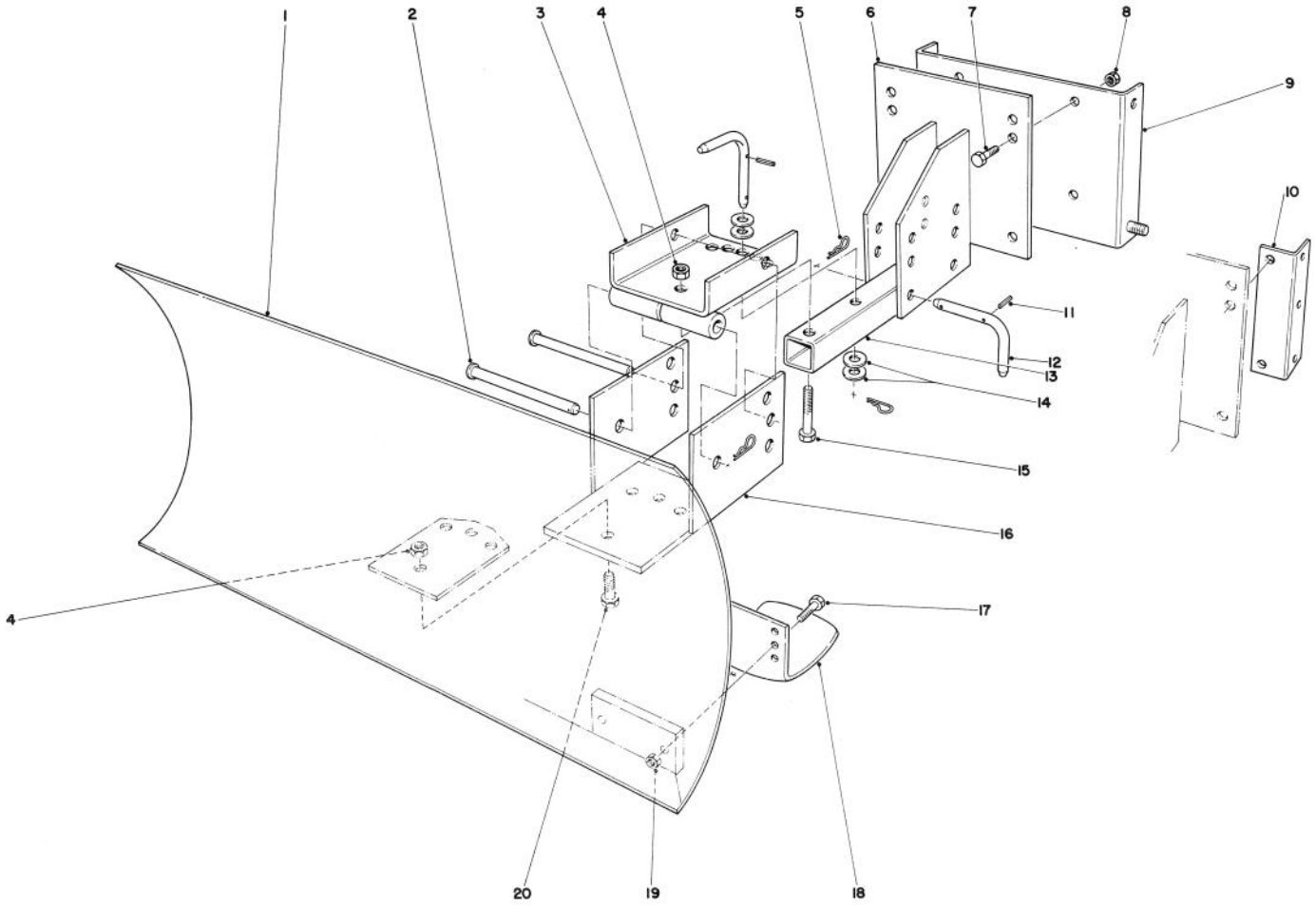

GRADER BLADE ASSEMBLY MODEL NO. 59099 (Optional)

Ref. No.	Part No.	Description	No. Used
1	7-4374	Blade	1
2	283-38	Pin	2
3	20-5090	Swivel Bracket	1
4	32152-3	Locknut	5
5	3290-322	Hair Pin Cotter	5
6	20-5170	Mounting Plate	1
7	323-6	Capscrew	4
8	32152-2	Locknut	4
9	22-4920	Mounting Plate Bracket (used with 826 and 1132 only)	1
10	39-7850	Mounting Rail (used with 3521, 421 & 521 units only)	2
11	32121-45	Roll Pin	3
12	20-5210	Pivot Pin (Incl. Ref. #11)	3
13	20-5140	Blade Tongue	1
14	3256-5	Flat Washer	4

Ref. No.	Part No.	Description	No. Used
15	325-11	Capscrew	1
16	20-5130	Blade Adjustment Plate	1
17	322-6	Capscrew	4
18	7-1023	Skid	2
19	32152-1	Locknut	4
20	325-5	Capscrew	4
*		Air Cleaner Kit (B&S)	1
*†	867063	Tube Breather	1
*†	093158	Screw	1
*†	092129	Wing Nut	1
*†	390400	Air Cleaner Cover & Filter	1
*†	390311	Pipe Tube Assembly	1
*†	230768	Stud	1
*†	066648	Gasket-O-Ring	1
*†	222150	Strap	1
*†	093453	Nut	1

*Not Illustrated

†Obtain from your local Briggs & Stratton Dealer.

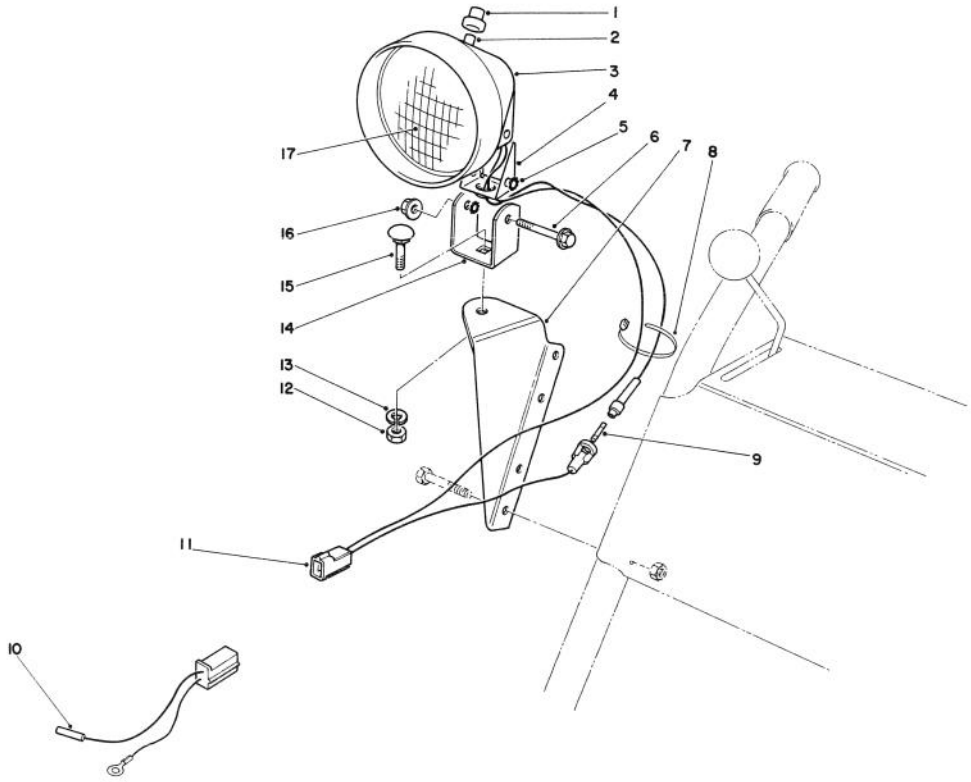

LIGHT KIT NO. 54-9820 (Optional)

Ref. No.	Part No.	Description	No. Used
1	218-473	Boot — Switch	1
2	218-553	Switch Assembly	1
3	218-552	Bucket — Headlamp	1
4	218-554	Bracket	1
5	3255-8	Washer — Lock	2
6	322-13	Screw — Hex Flange Hd.	1
7	54-9830	Mount — Lamp	1
8	3290-378	Tie Wrap	2
9†		Fuse — 7½ Amp	1
10	54-9810	Wire Assembly	1

Ref. No.	Part No.	Description	No. Used
11	218-555	Wire Assembly	1
12	3217-7	Nut — Hex	1
13	3253-21	Washer — Lock	1
14	218-556	Bracket — U	1
15	3231-2	Bolt — Carriage	1
16	32128-35	Nut — Flange Lock	1
17	218-15	Lens — Sealed Beam	1
*	54-9870	Headlamp Assembly Complete (Incl. Ref. #1-6, 9, 11 & 12-17)	1

*Not Illustrated

†Obtain Locally

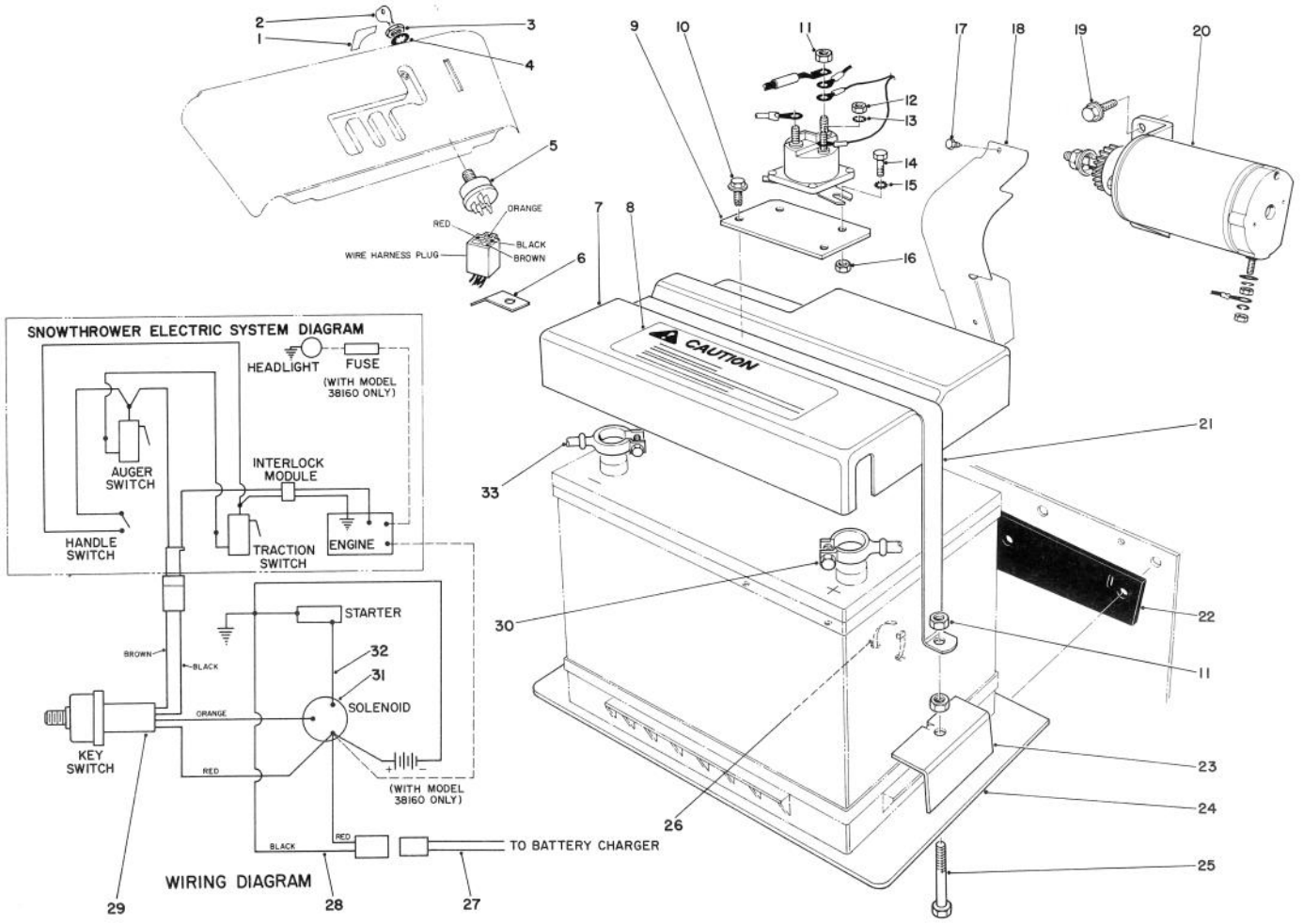

12 VOLT STARTING MOTOR KIT 42-3370 (Optional)

Ref. No.	Part No.	Description	No. Used
1	38-0640	Decal—Key Switch	1
2	33-2010	Key (Set of 2)	1
3	218-461	Hex Nut	1
4	3254-5	Lockwasher	1
5	42-3990	Starter Switch (Incl. Ref. #3&4)	1
6	22-9060	Bracket Wire Clamp	1
7	8-2839	Battery Cover (Incl. Ref. #8)	1
8	38-0630	Decal - Caution	1
9	22-8880	Solenoid Mounting Bracket	1
10	32144-10	Thread Forming Screw	2
11	3217-6	Hex Nut	6
12	3219-14	Hex Nut	1
13	3254-1	Lockwasher	1
14	321-2	Capscrew	2
15	3255-7	Lockwasher	2
16	3296-42	Locknut	2
17	32108-57	Self Tapping Screw	2
18	20-7060	Pinion Shield	1

Ref. No.	Part No.	Description	No. Used
19	32140-45	Hex Hd. Screw	2
20†		Starter Motor & Pinion Assy.	1
21	22-8850	Strap Battery Cover	1
22	24-6150	Battery Isolation Pad	1
23	22-8870	Battery Hold Downs	2
24	22-8830	Battery Mounting Plate	1
25	322-10	Capscrew	2
26	3290-378	Tie Wrap	5
27	29-7830	Wire Assembly	1
28	29-7820	Wire Assembly	1
29	42-4000	Wire Harness	1
30	22-9320	Battery Cable — Pos.	1
31	6-1600	Solenoid	1
32	22-9310	Wire Assembly	1
33	22-9330	Battery Cable — Neg.	1
*	26-3870	Charger 110V (U.S. & Canada)	1
*	26-7140	Charger 220V (Europe)	1

*Not illustrated; is not included with kit.
†Obtain from your local Briggs & Stratton dealer part no. 393852.

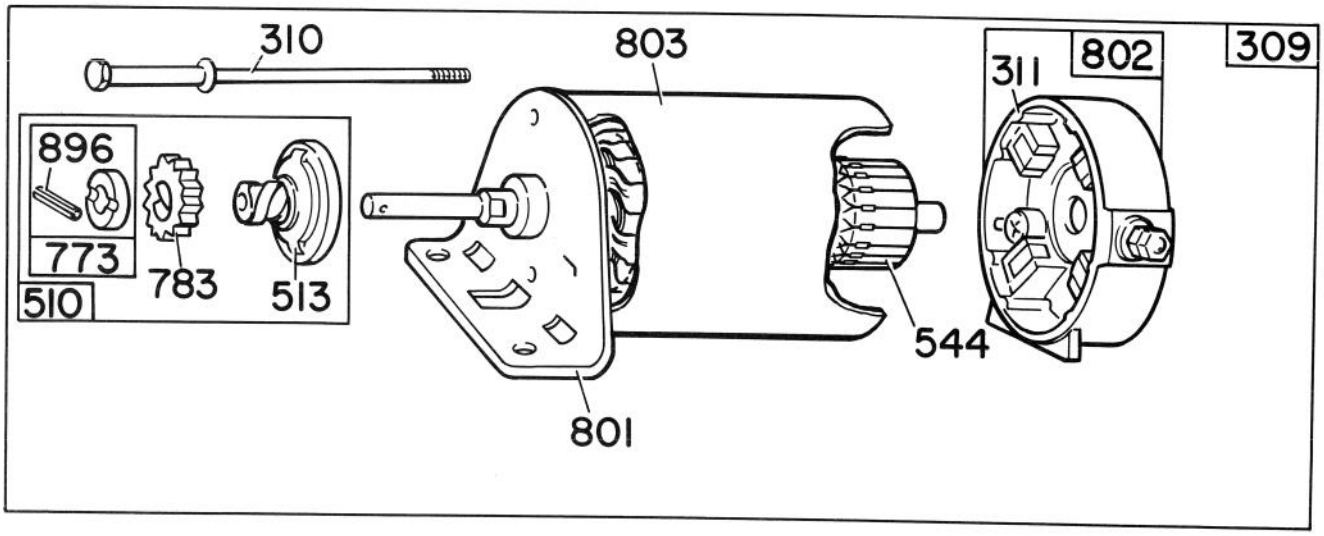

12 VOLT STARTER MOTOR BRIGGS & STRATTON NO. 393852

Ref. No.	Part No.	Description	No. Used
309	391177	Motor and Drive Assembly	1
310	93933	Thru Bolt Assembly	2
311	391705	Brush Assembly	2
510	391461	Drive Assembly (Incl. Ref. # 513, 773, 783 & 896)	1
513	391135	Clutch Assembly	1
544	391160	Armature Assembly	1

Ref. No.	Part No.	Description	No. Used
773	391462	Retainer & Pin	1
783	280104	Gear	1
801	392061	End Cap Assembly — Drive	1
802	390846	End Cap Assembly — Commutator (Incl. Ref. #311)	1
803	391167	Housing Assembly	1
896	93754	Pin — Roll	1

Note: Obtain replacement parts from your local Briggs & Stratton Dealer.

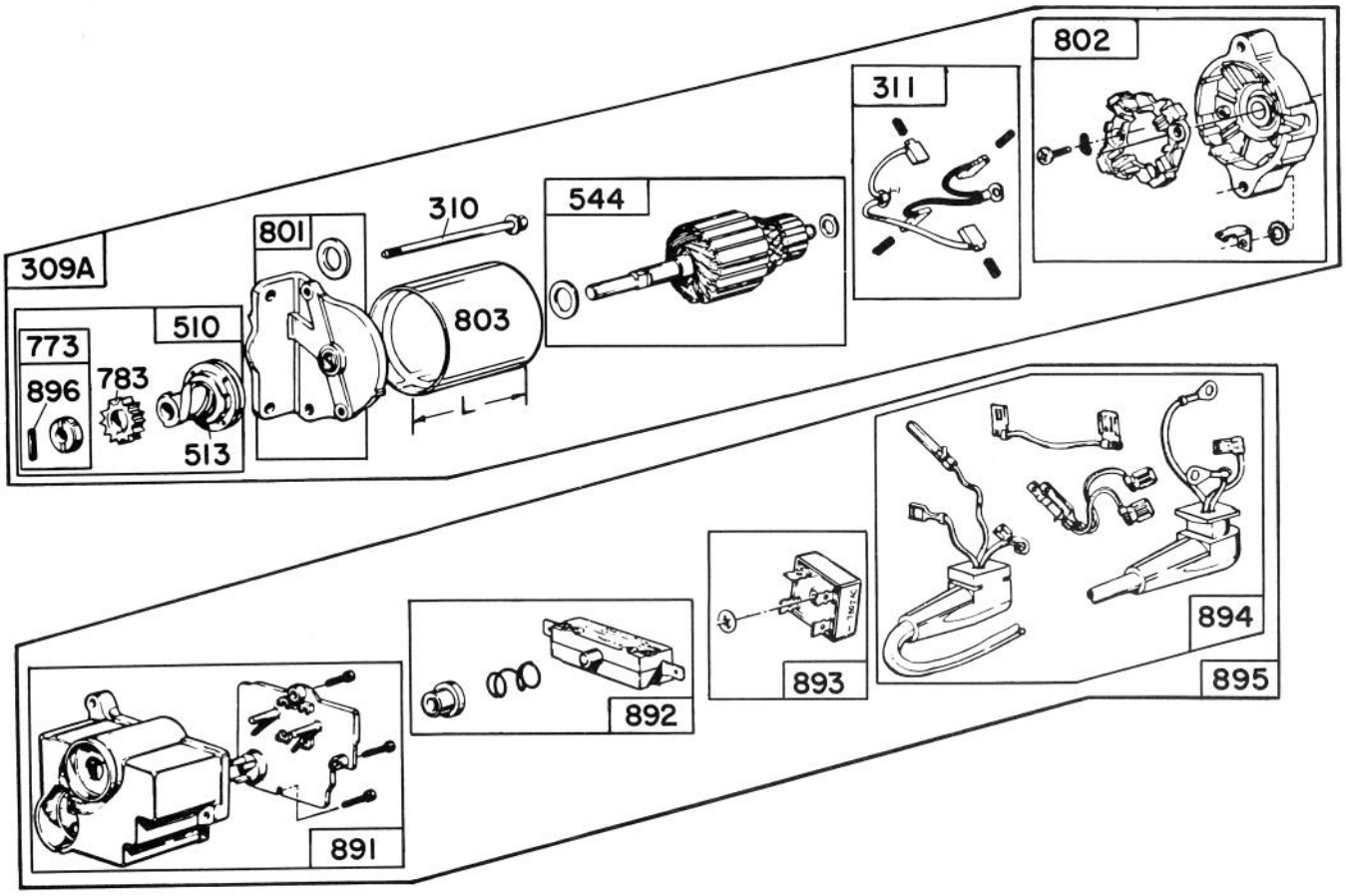

STARTER MOTOR KIT MODEL NO. 37-4630 (Optional)

Ref. No.	Part No.	Description	No. Used
309	393851	Motor & Drive Assembly	1
310	93934	Thru Bolt Assembly	1
311	393612	Brush Assembly	1
510	391461	Drive Assembly (Incl. Ref. # 513, 773, 783 & 896)	1
513	391135	Clutch Assembly	1
544	393607	Armature Assembly	1
773	391462	Retainer & Pin (Incl. Ref. #896)	1
783	280104	Gear	1
801	393228	Drive End Cap Assembly	1
802	393833	Comm. End Cap Assembly	1

Ref. No.	Part No.	Description	No. Used
803	393433	Housing Assembly	1
891	393705	Housing Group	1
892	393708	Switch Group	1
893	393707	Rectifier	1
894	393706	Lead Group	1
895	393486	Control Group	1
896	93754	Pin — Roll	1
*†	38-0070	Bracket Switch	1
*†	3296-2	Nut	3
*†	3252-6	Fillister Hd. Machine Screw	3

*Not Illustrated
†Obtain from The Toro Co.
Note: Obtain replacement parts from your local Briggs & Stratton Dealer.

ENGINE BRIGGS & STRATTON MODEL NO. 190406-3054-01

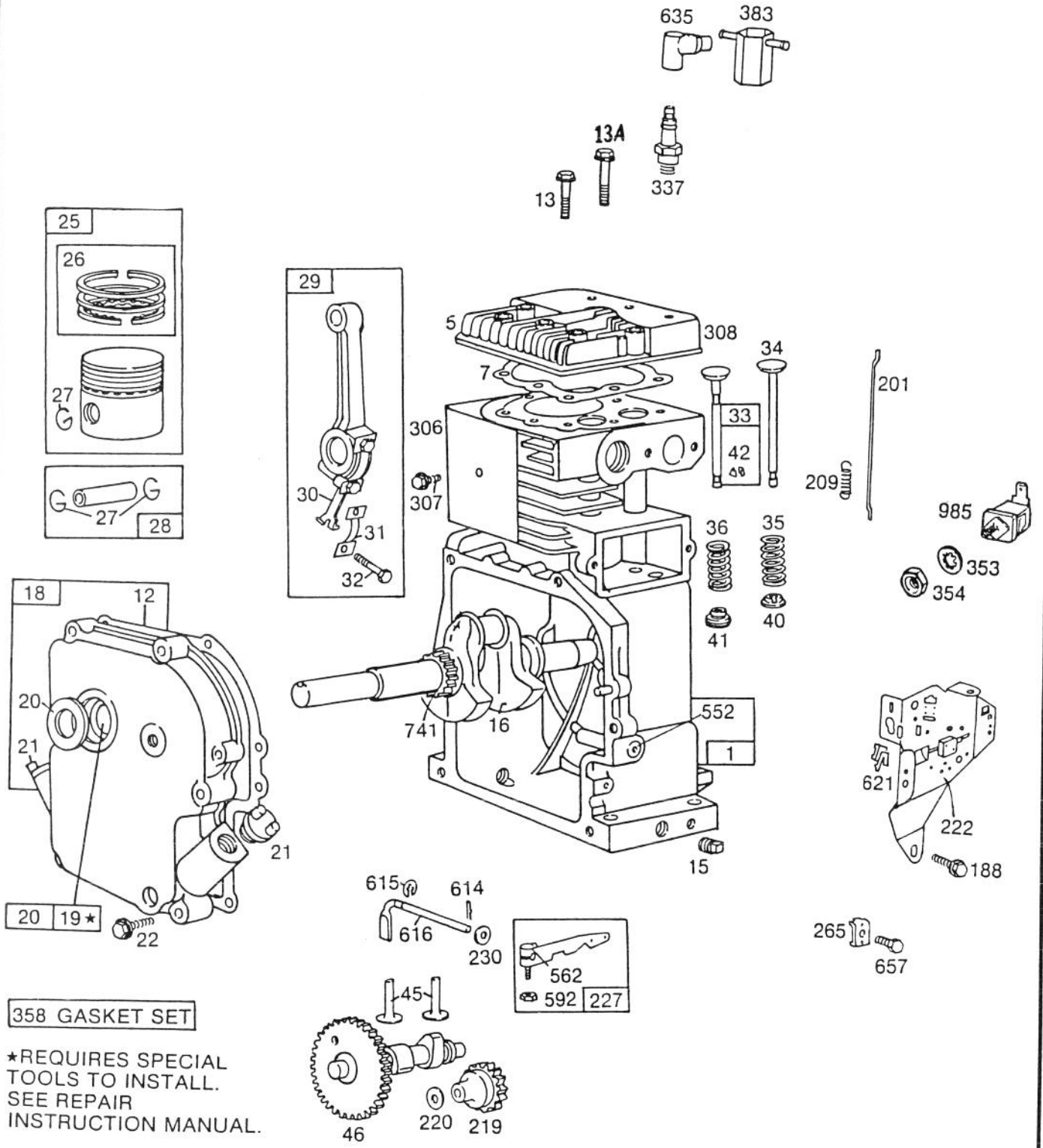

Assemblies include all parts shown in frames.

ENGINE BRIGGS & STRATTON MODEL NO. 190406-3054-01

Ref. No.	Part No.	Description	No. Used
1	396178	Cylinder Assembly	1
5	212918	Head — Cylinder	1
7	*270430	Gasket — Cylinder Hd.	1
12	*27750	Gasket — Crankcase Cover, 1/64" thick	1
	*27876	Gasket — Crankcase Cover, .005" thick	1
	*27877	Gasket — Crankcase Cover, .009" thick	1
13	93211	Screw — Cylinder Head (2-21/32" long)	1
13A	93113	Screw — Cylinder Head (2-5/16" long)	1
15	91084	Plug — Oil Drain	1
16	399483	Crankshaft	1
		To Replace Crankshaft Gear Pin, Order Part No. 230978 Used Only With Crankshaft With Loose Gear.	
18	392818	Cover Assembly — Crankcase	1
19	295964	Bushing — Crankcase Cover	1
		Note: Requires special tools for installation.	
20	391086	Seal — Oil	1
21	66768	Plug — Oil Filler	1
22	93585	Screw — Crankcase Cover Mounting	1
25	391673	Piston Assy. — Standard	1
	391674	Piston Assy. — .010" O.S.	1
	391675	Piston Assy. — .020" O.S.	1
	391676	Piston Assy. — .030" O.S.	1
		Piston Ring Sets:	
		Note: For Chrome Ring Set — Std. Size, Order No. 299743.	
26	391669	Ring Set — Piston, Std.	1
	391670	Ring Set — Piston, .010" O.S.	1
	391671	Ring Set — Piston, .020" O.S.	1
	391672	Ring Set — Piston, .030" O.S.	1
27	68546	Lock — Piston Pin	1
28	295840	Pin Assy. — Piston, Std.	1
	295841	Pin Assy. — Piston, .005" O.S.	1
29	390401	Rod Assy. — Connecting	1
		Note: For Connecting Rod with .020" Undersize Crankpin Bore — Order No. 390773.	

*Included in Gasket Set — Part No. 299577.

Ref. No.	Part No.	Description	No. Used
30	222113	Dipper — Connecting Rod	1
31	222114	Lock — Conn. Rod Screw	1
32	92659	Screw — Connecting Rod	1
33	390419	Valve — Exhaust	1
34	261055	Valve — Intake	1
35	65906	Spring — Intake Valve	1
36	26828	Spring — Exhaust Valve	1
40	221596	Retainer — Intake Valve	1
41	292260	Rotocoil — Exhaust Valve	1
42	93630	Retainer — Exhaust Valve Rotocoil	2
45	260933	Tappet — Valve	1
46	211689	Gear — Cam	1
188	93535	Screw — Sem	1
201	260872	Link — Governor	1
209	261126	Spring — Governor	1
219	391737	Gear — Governor	1
220	221551	Washer — Thrust	1
222	399151	Plate — Governor Control	1
227	391965	Lever Assembly — Governor	1
230	222450	Washer — Governor Crank	1
265	221535	Clamp — Casing	1
306	222830	Shield — Cylinder	1
307	93163	Screw — Cylinder Shield Mtg.	1
308	221901	Cover — Cylinder Head	1
337	293918	Plug — Spark (1-1/2" high, 37 M.M.) (Resistor Type)	1
353	92791	Washer — Lock, Shakeproof	1
354	90576	Nut — Hex	1
358	299577	Gasket Set	1
383	89838	Wrench — Spark Plug	1
552	231056	Bushing — Governor Crank	1
562	92613	Bolt — Governor Lever	1
592	231082	Nut — Hex	1
614	93306	Cotter — Hair Pin	1
615	93307	Retainer — E-Ring	1
616	231057	Crank — Governor	1
621	396847	Switch — Stop	1
635	66538	Elbow — Spark Plug	1
657	93496	Screw	1
741	261195	Gear — Timing (Loose Gear)	1
985	398525	Insulator Assembly	1

ENGINE BRIGGS & STRATTON MODEL NO. 190406-3054-01 (Continued)

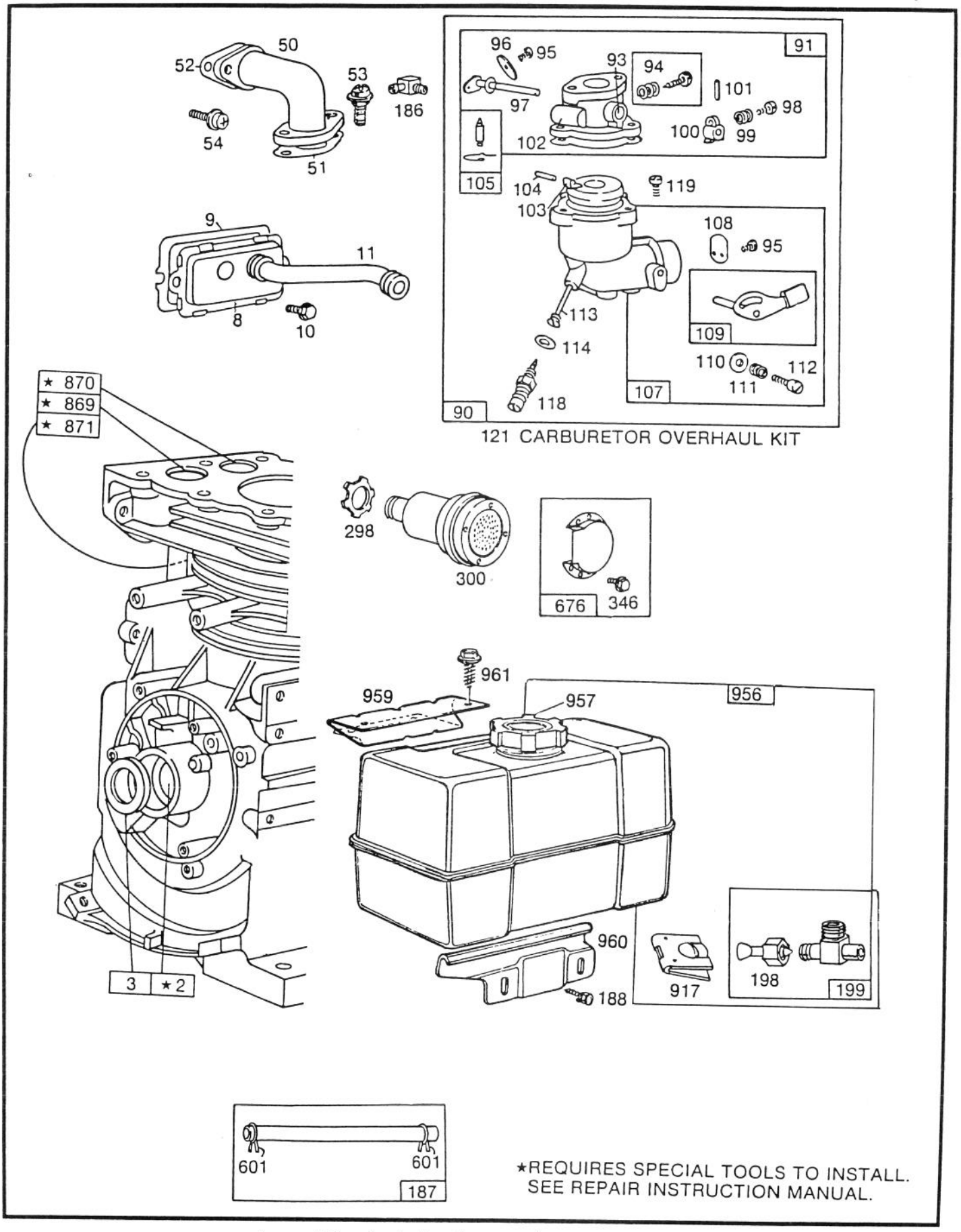

Assemblies include all parts shown in frames.

ENGINE BRIGGS & STRATTON MODEL NO. 190406-3054-01 (Continued)

Ref. No.	Part No.	Description	No. Used
2	295962	Bushing — Cylinder **Note:** Requires special tools for installation.	1
3	294606	Seal — Oil	1
8	390321	Breather Assembly	1
9	*27803	Gasket — Valve Cover	1
10	93394	Screw — Sem	1
11	280733	Tube — Breather	1
50	490050	Elbow — Intake	1
51	*270684	Gasket — Carb. Mtg.	1
52	*27828	Gasket — Intake Elbow Mtg.	1
53	93357	Screw — Carburetor Mtg. Sem	1
54	93208	Screw — Intake Elbów Mounting Sem	1
90	490140	Carburetor Assembly	1
91	399443	Body Assembly — Upper Carburetor	1
93	23108	Bushing — Throttle Shaft	1
94	†292681	Valve Assy. — Carburetor Idle	1
95	93499	Screw — Throttle and Choke Valve Mtg. Sem	1
96	62940	Valve — Throttle	1
97	298826	Shaft and Lever — Throttle	1
98	91920	Screw — Machine, Fil. Hd.	1
99	26157	Spring — Throttle Adjustment	1
100	61967	Stop — Throttle	1
101	93043	Pin — Throttle Stop	1
102	†27918	Gasket — Carburetor Body	1
103	99333	Float — Carburetor	1
104	†230896	Pin — Float Hinge	1
105	394681	Valve — Fuel Inlet	1
107	399258	Body Assembly — Lower Carburetor	1

Ref. No.	Part No.	Description	No. Used
108	223727	Valve — Choke	1
109	391888	Shaft and Lever — Choke	1
110	222712	Washer — Choke Lever	1
111	26155	Spring — Choke Lever	1
112	23123	Screw — Choke Lever	1
113	†398202	Nozzle — Carburetor	1
114	†68667	Gasket — Nozzle	1
118	†99525	Valve — Needle	1
119	94152	Screw — Hex Hd.	1
121	398235	Carburetor Overhaul Kit	1
186	67218	Connector — Fuel Pipe	1
187	393815	Pipe — Fuel (Flexible) 11" long	1
188	93535	Screw — Sem	1
198	293934	Valve — Fuel Shut-Off	1
199	390303	Outlet — Fuel Tank	1
298	261409	Locknut — Muffler	1
300	393010	Muffler — Exhaust	1
346	93705	Screw — Sem	1
601	93807	Clamp — Hose (For 1/2" O.D. Hose)	1
676	393757	Deflector — Exhaust	1
869	211661	Seat — Intake Valve (Std.)	1
870	211661	Seat — Exhaust Valve (Std.)	1
871	231218	Guide — Exhaust or Intake Valve	1
917	223271	Valve Handle — Fuel Shut-Off	1
956	397928	Tank Assembly — Fuel	1
957	397975	Cap — Fuel Tank	1
959	223462	Bracket — Fuel Tank (Upper)	1
960	222463	Bracket — Fuel Tank (Lower)	1
961	94095	Screw — Tank Mounting	1

*Included in Gasket Set — Part No. 299577.
†Included in Carburetor Overhaul Kit — Part No. 398235.

ENGINE BRIGGS & STRATTON MODEL NO. 190406-3054-01 (Continued)

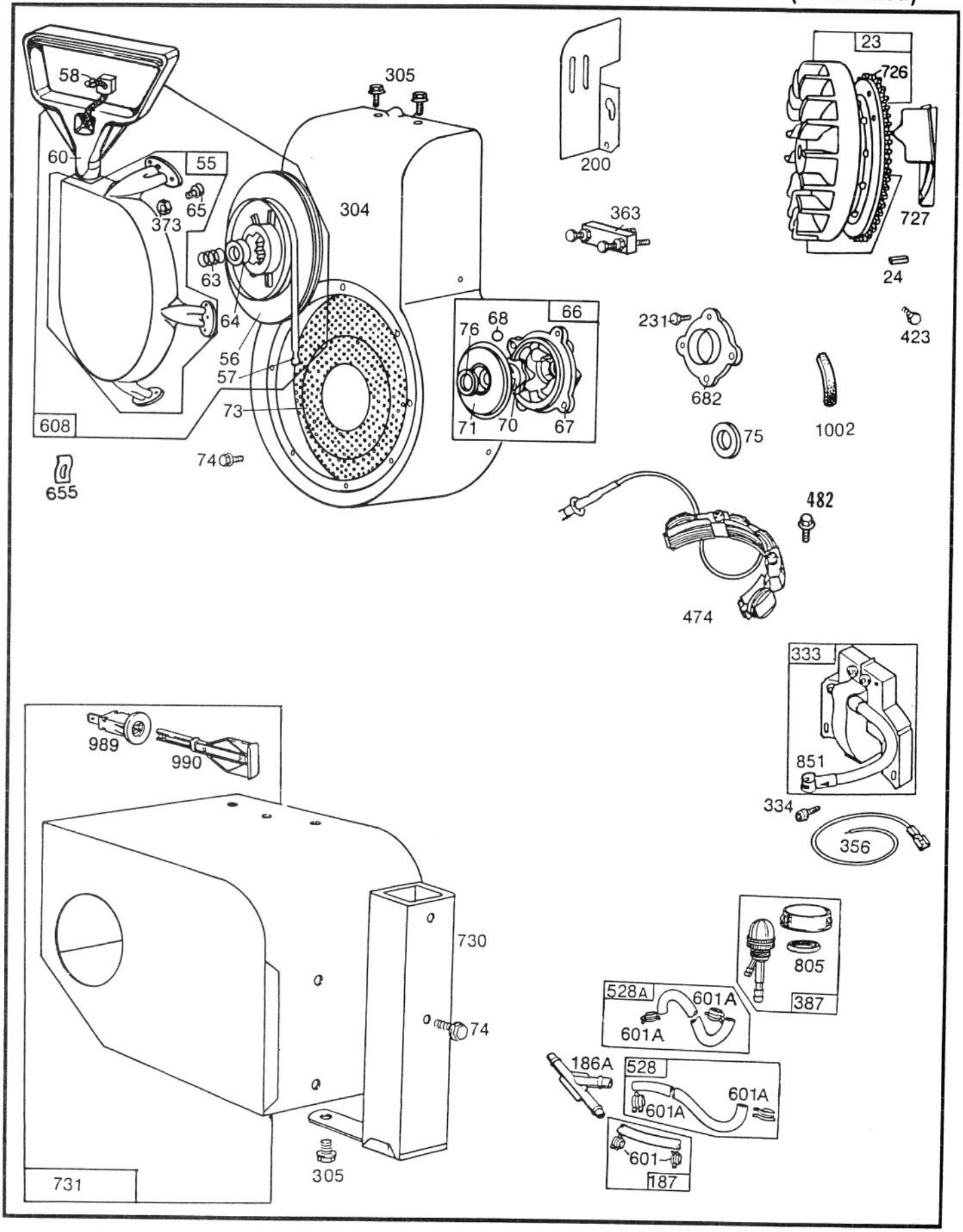

Assemblies include all parts shown in frames.

ENGINE BRIGGS & STRATTON MODEL NO. 190406-3054-01 (Continued)

Ref. No.	Part No.	Description	No. Used
23	391983	Flywheel and Ring Gear Assy. — Magneto	1
24	222698	Key — Flywheel	1
55	398099	Housing — Rewind Starter	1
56	295871	Pulley — Rewind Starter	1
57	490179	Spring — Rewind Starter	1
58	66884	Rope — Rewind Starter 63" long	1
60	398101	Grip — Starter Rope	1
63	260414	Spring — Ratchet	1
64	230543	Adapter — Ratchet Spring	1
65	93105	Screw — Rewind Starter Housing Mounting	1
66	394558	Clutch Assy. — Rewind Starter	1
67	394897	Housing — Rewind Starter Clutch	1
68	63770	Ball — Clutch	1
70	298799	Ratchet — Rewind Starter Clutch	1
71	221653	Washer — Retainer	1
73	221796	Screen — Rewind Starter	1
74	93042	Screw — Sem	1
75	220865	Washer — Spring	1
76	68238	Washer — Ratchet Sealing	1
186A	280727	Connector — Fuel Pipe	1
187	393815	Pipe — Fuel (Flexible) 11" long	1
200	221760	Guide — Air	1
231	93064	Screw	1
304	399271	Housing — Blower	1
305	93158	Screw	1
333	398265	Armature — Magneto	1
334	93381	Screw Armature Mounting	1
356	398838	Wire — Ground	1

Ref. No.	Part No.	Description	No. Used
363	19203	Puller — Flywheel	1
373	92987	Nut — Hex	1
387	399255	Primer	1
423	93712	Screw	2
		Uses:	
		93713 Washer — Lock	2
474	391595	Stator and Bracket — Alternator	1
482	93621	Screw	1
528	399254	Hose — Fuel	1
528A	399256	Hose — Fuel	1
601	93807	Clamp — Hose (For 1/2" O.D. Hose)	1
601A	94171	Clamp — Hose (For 1/4" O.D. Hose)	1
608	397982	Starter Assy. — Rewind	1
655	222598	Anchor — Spring	1
682	211516	Shield — Starter Clutch	1
726	392134	Gear — Ring (Aluminum — Includes Mounting Parts)	1
727	223597	Cover — Starter Gear	1
		Uses:	
		93712 Screw	2
		93713 Lockwasher	2
		Used to mount Guard	
730	299384	Stack — Carburetor	1
731	399157	Hood — Snow	1
805	94189	Nut — Primer Retaining	1
851	221798	Terminal — Ignition Cable	1
989	397698	Switch Assembly	1
990	280596	Key	1
1002	280738	Trim Strip — Blower Housing	1

PRODUCT CHANGES

In an effort to make improvements available to TORO owners as quickly as possible, minor changes are incorporated into Toro's products from time to time that do not become immediately shown in the Parts Catalog. If such a change apparently has been made in your unit, which is not reflected in your manual, see your TORO Distributor or his Authorized TORO Service Dealer for information and part numbers.

IDENTIFICATION AND ORDERING

MODEL AND SERIAL NUMBERS

The Snowthrower has two identification numbers: a model number and a serial number. The two numbers are stamped on a decal which is located on left rear side of the engine mounting plate. In any correspondence concerning the Snowthrower, supply model and serial numbers to assure that correct information and replacement parts are obtained.

To order replacement parts from an Authorized TORO Service Dealer, supply the following information:

1. Model and serial numbers of the Snowthrower.
2. Part number, description, and quantity of part(s) desired.

Note: Do not order by reference number if a parts catalog is being used; use the PART NUMBER.

The Toro Promise

A TWO YEAR LIMITED WARRANTY
On All Gasoline Powered Consumer Products

The Toro Company promises to repair your TORO Product if defective in materials or workmanship. The following time periods from the date of purchase apply:

Residential Product . . . . . 2 Years
Residential Products Used Commercially . . . 45 Days

The costs of parts and labor are included, but the customer pays the transportation costs. Just return any residential product to an Authorized TORO Service Dealer or TORO Distributor.

Should you feel your TORO Product is defective and wish to rely on The Toro Promise, the following procedure is recommended:

1. Contact any Authorized TORO Service Dealer, TORO Master Service Dealer, or TORO Distributor (the Yellow Pages of your telephone directory is a good reference source).
2. He will either instruct you to return the product to him or recommend another Authorized TORO Service outlet which might be more convenient.
3. Bring the product along with your original sales slip, or other evidence of purchase date, to the service dealer.
4. The servicing dealer will inspect the unit, advise you whether the product is defective and, if so, make all repairs necessary to correct the defect without extra charge to you.

If for any reason you are dissatisfied with the dealer's analysis of the defect or the service performed, you may contact us.

Write:

TORO Customer Service Department
8111 Lyndale Avenue South
Minneapolis, Minnesota 55420

The above remedy of product defects through repair by an Authorized TORO Service Dealer is the purchaser's sole remedy for any defect.

THERE IS NO OTHER EXPRESS WARRANTY. ALL IMPLIED WARRANTIES OF MERCHANTABILITY AND FITNESS FOR USE ARE LIMITED TO THE DURATION OF THE EXPRESS WARRANTY.

Some states do not allow limitations on how long an implied warranty lasts, so the above limitation may not apply to you.

This warranty applies only to parts or components which are defective and does not cover repairs necessary due to normal wear, misuse, accidents, or lack of proper maintenance. Regular, routine maintenance of the unit to keep it in proper operating condition is the responsibility of the owner.

All warranty repairs reimbursable under The Toro Promise must be performed by an Authorized TORO Service Dealer using Toro approved replacement parts.

Repairs or attemped repairs by anyone other than an Authorized TORO Service Account are not reimbursable under The Toro Promise. In addition, these unauthorized repair attempts may result in additional malfunctions, the correction of which is not covered by warranty.

THE TORO COMPANY IS NOT LIABLE FOR INDIRECT, INCIDENTAL OR CONSEQUENTIAL DAMAGES IN CONNECTION WITH THE USE OF THE PRODUCT INCLUDING ANY COST OR EXPENSE OF PROVIDING SUBSTITUTE EQUIPMENT OR SERVICE DURING PERIODS OF MALFUNCTION OR NON-USE.

Some states do not allow the exclusion or limitation of incidental or consequential damages, so the above limitation or exclusion may not apply to you.

This warranty gives you specific legal rights, and you may also have other rights which vary from state to state.

COUNTRIES OTHER THAN THE UNITED STATES OR CANADA

Customers who have purchased TORO products exported from the United States or Canada should contact their TORO Distributor (Dealer) to obtain guarantee policies for your country, province or state. If for any reason you are dissatisfied with your Distributor's service or have difficulty obtaining guarantee information, contact the TORO importer. If all other remedies fail, you may contact us at The Toro Company.

Compliance with Radio Interference Regulations Certified.
Certifie Conforme au Reglement sur le Brouillage Radioelectrique.

V31-938

MAINTENANCE RECORD

Date	Hours Used	Check Scraper	Check Belt	Check Spark Plug	Preparing For Storage	Comments

MAINTENANCE RECORD

Date	Hours Used	Check Scraper	Check Belt	Check Spark Plug	Preparing For Storage	Comments