Form Number 3352-893

Z453 Z Master®

With 132cm TURBO FORCE Side Discharge Mower

Model No. 74416TE - 250000001 and up.

Parts Catalog

Ordering Replacement Parts

To order replacement parts, please supply the part number, the quantity, and the description of each part desired.

Understanding Reference Numbers

Each Identified part in an illustration has a reference number. The reference number for a part also appears in the parts list, along with other information about the part.

This catalog uses two special reference number formats, one to indicate parts in a service assembly and another to indicate the quantity of a given part in an illustration.

Service Assembly Reference Numbers

Parts in service assemblies have reference numbers in the form a:b. The a represents the reference number of the entire service assembly and the b represents a sequential number unique to each part within the service assembly.

For example, a wheel assembly might be identified by reference number 6, the tire by 6:1, the valve by 6:2, and the wheel by 6:3. When you order the assembly identified by reference number 6, you receive all parts identified by reference numbers 6:1, 6:2, and 6:3. However, you may also order any part individually. Reference numbers of this type appear in illustrations and in part lists.

Reference Numbers Indicating Quantity

In an illustration, if a reference number indicates more than one part, the reference number has the form nX y. The n represents the quantity of the part, the X is the multiplication symbol, and the y represents the reference number.

For example, in an illustration, the reference number 2X 37 means that two of the parts identified by reference number 37 are indicated.

©The Toro Company - 2004
All Rights Reserved

Register your product at www.Toro.com

Contents

Description	Page
Front Frame Assembly	3
Caster Wheel Assembly No. 1-634662	4
Height-of-Cut Assembly	5
Main Frame Assembly	6
Fuel System Assembly	7
Parking Brake Assembly	8
Motion Control Assembly	9
Hydraulic System Assembly	10
Hydraulic Pump Assembly No. 103-1942	12
Pump Idler and Belt Assembly	13
Engine, Clutch and Muffler Assembly	14
Deck Connection Assembly	15
Deck Assembly No. 107-1671	16
Idler Assembly	18
Spindle Assembly No. 107-8504	19
Deck Decal Assembly No. 107-1668	20
Rubber Deflector Assembly No. 108-4060	21
Electrical System Assembly	22
Seat and Bracket Assembly	23
Seat Assembly No. 107-1867	24
Roll-Over-Protection-System Assembly	25
Roll-Over-Protection-System Assembly No. 107-8093	26
Cylinder/Crankcase Assembly Kawasaki FH680V-AS21	27
Piston/Crankshaft Assembly Kawasaki FH680V-AS21	28
Valve/Camshaft Assembly Kawasaki FH680V-AS21	29
Lubrication Equipment Assembly Kawasaki FH680V-AS21	30
Cooling Equipment Assembly Kawasaki FH680V-AS21	31
Electric Equipment Assembly Kawasaki FH680V-AS21	32
Control Equipment Assembly Kawasaki FH680V-AS21	33
Carburetor Assembly Kawasaki FH680V-AS21	34
Air Filter and Muffler Assembly Kawasaki FH680V-AS21	35
Starter Assembly Kawasaki FH680V-AS21	36
Fuel Tank/Fuel Valve Assembly Kawasaki FH680V-AS21	37
Decal Assembly Kawasaki FH680V-AS21	38

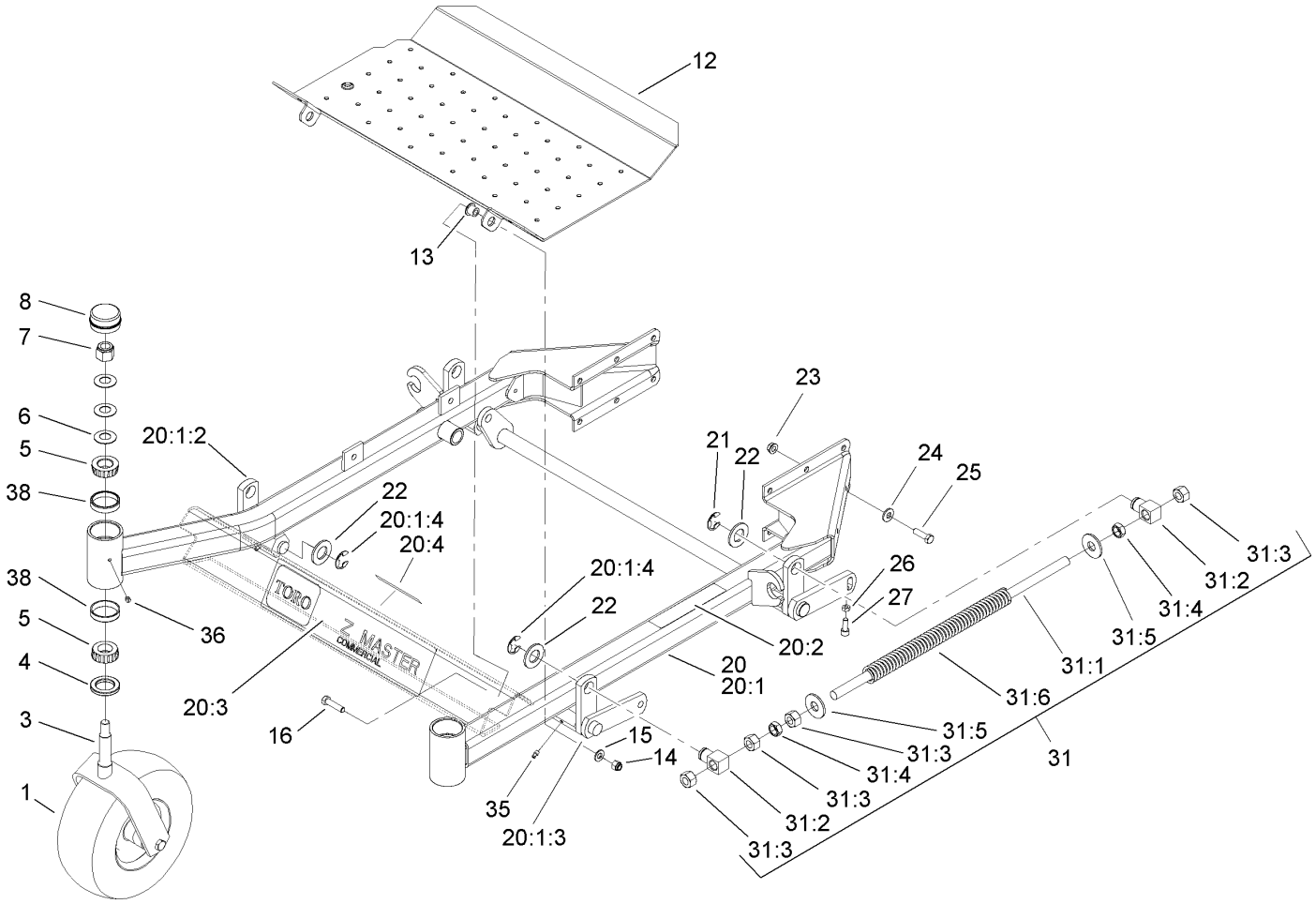
Part Description Abbreviations

Part descriptions in this catalog may include the following abbreviations.

AR. . . . . as required
ASM. . . . . assembly
CARR. . . . . carriage
DEG. . . . . degrees
FH. . . . . flat head
GA. . . . . gauge
HF. . . . . hex flange
HH. . . . . hex head
HHF. . . . . hex head flange
HHFTF. . . . . hex head flange thread forming
HJ. . . . . hex jam
HLH. . . . . hex lag head
HOC. . . . . height-of-cut
HS. . . . . hex
HSBH. . . . . hex socket button head
HSFH. . . . . hex socket flat head
HSH. . . . . hex socket head
HWH. . . . . hex washer head
HWHTF. . . . . hex washer head thread forming
HYD. . . . . hydraulic
INC. . . . . incorporated
LH. . . . . left hand
NI. . . . . nylon insert
PPH. . . . . phillips pan head
PTH. . . . . phillips truss head
PTO. . . . . power take off
RH. . . . . right hand
SFH. . . . . slotted fillister head
SHH. . . . . slotted hex head
SHWH. . . . . slotted hex washer head
SPH. . . . . slotted pan head
SQH. . . . . square head
SRH. . . . . slotted round head
STD. . . . . standard
TAP. . . . . self tapping
TTH. . . . . torx truss head
WH. . . . . wing head

Footnotes

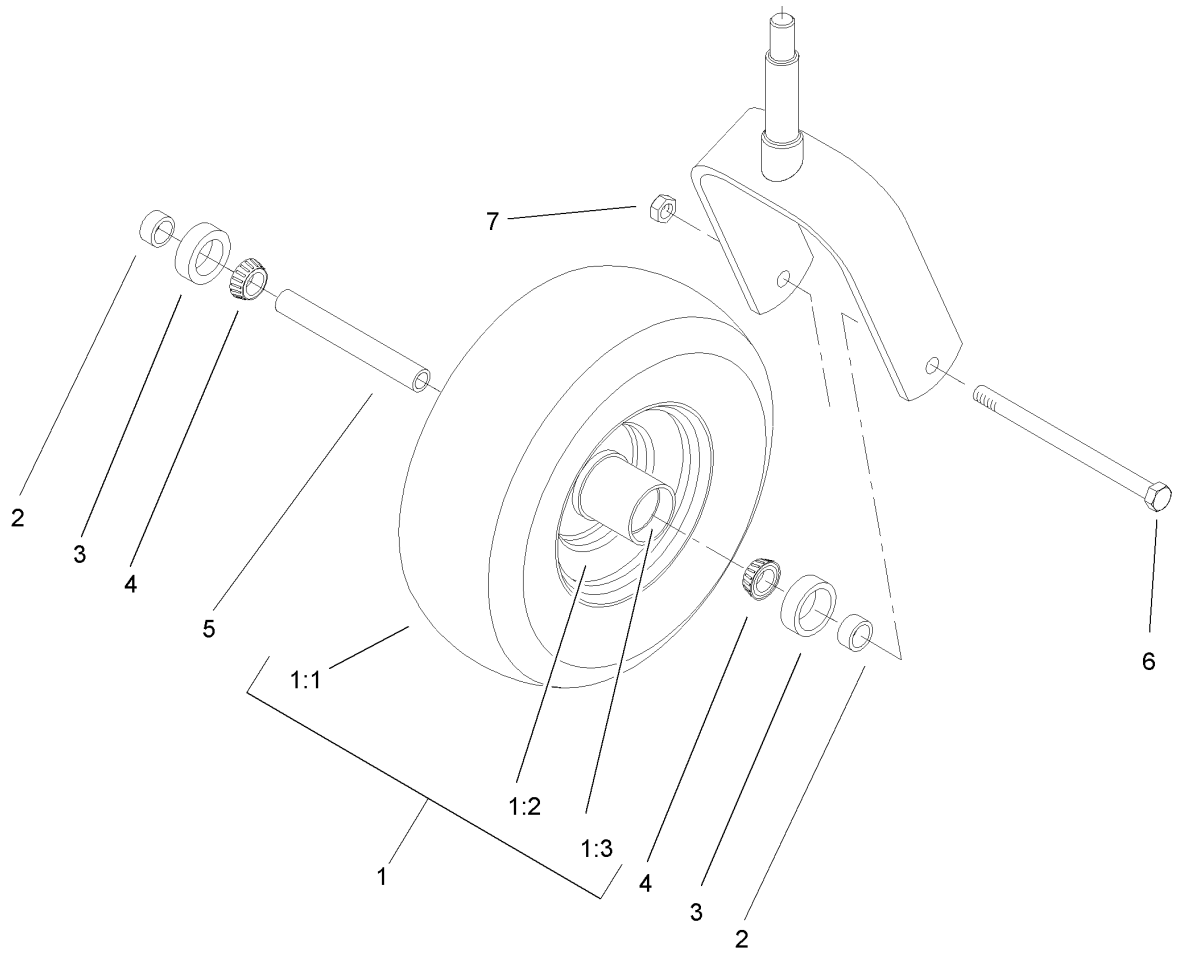
❶ Not illustrated
❷ Not serviced separately
❸ Obtain Parts From Kawasaki



Front Frame Assembly

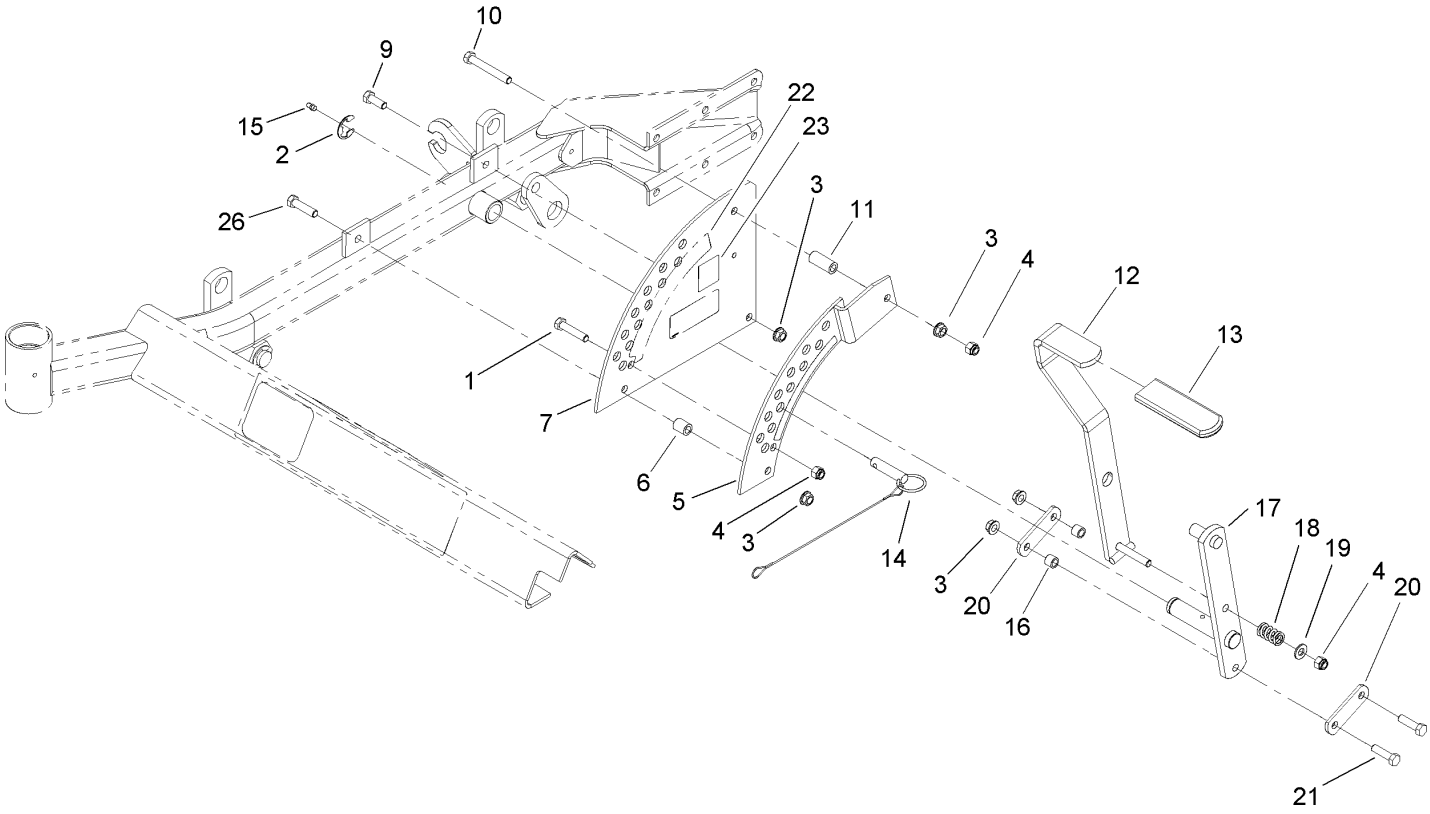
Ref	Part No.	Qty.	Description
1	1-634662	2	Caster Wheel ASM
3	1-632511-01	2	Caster
4	1-543511	2	Seal-Grease
5	254-94	4	Bearing-Cone, Tapered
6	1-633508	6	Washer-Bellville
7	3296-51	2	Nut-Lock, NI
8	1-543513	2	Cap-Grease
12	108-5007-03	1	Floor Pan
13	86-2180	2	Bushing-Flange
14	3296-39	2	Nut-Lock, NI
15	3256-24	2	Washer-Flat
16	323-8	2	Screw-HH
20	107-1681	1	Front Frame ASM
❷20:1		1	Front Frame ASM
20:1:2	99-3872-01	1	RH Lift Arm ASM
20:1:3	99-3871-01	1	LH Lift Arm ASM
20:1:4	32151-103	2	Ring-Snap
20:2	106-7451	1	Decal
20:3	107-1866	1	Decal-Danger, Slope
20:4	107-2132	1	Decal-Warning
21	32151-103	4	Ring-Snap
22	3256-29	6	Washer-Flat
23	3290-357	12	Nut-HHF
24	98-5975	12	Washer-Belleville

Ref	Part No.	Qty.	Description
25	323-7	12	Screw-HH
26	3218-2	2	Nut-Jam
27	3274-18	2	Screw-HSH
31	1-634439	2	Front Frame Spring ASM
31:1	1-633096	1	Rod-Lift, Deck
31:2	1-633441	2	Swivel-Deck Mount, Rear
31:3	3217-11	4	Nut-Hex
31:4	3218-6	2	Nut-Jam
31:5	3256-7	2	Washer-Flat
31:6	1-633064	1	Spring-Support, Deck
35	302-19	4	Fitting-Grease
36	1-811010	2	Plug
38	254-72	4	Bearing-Cup, Tapered



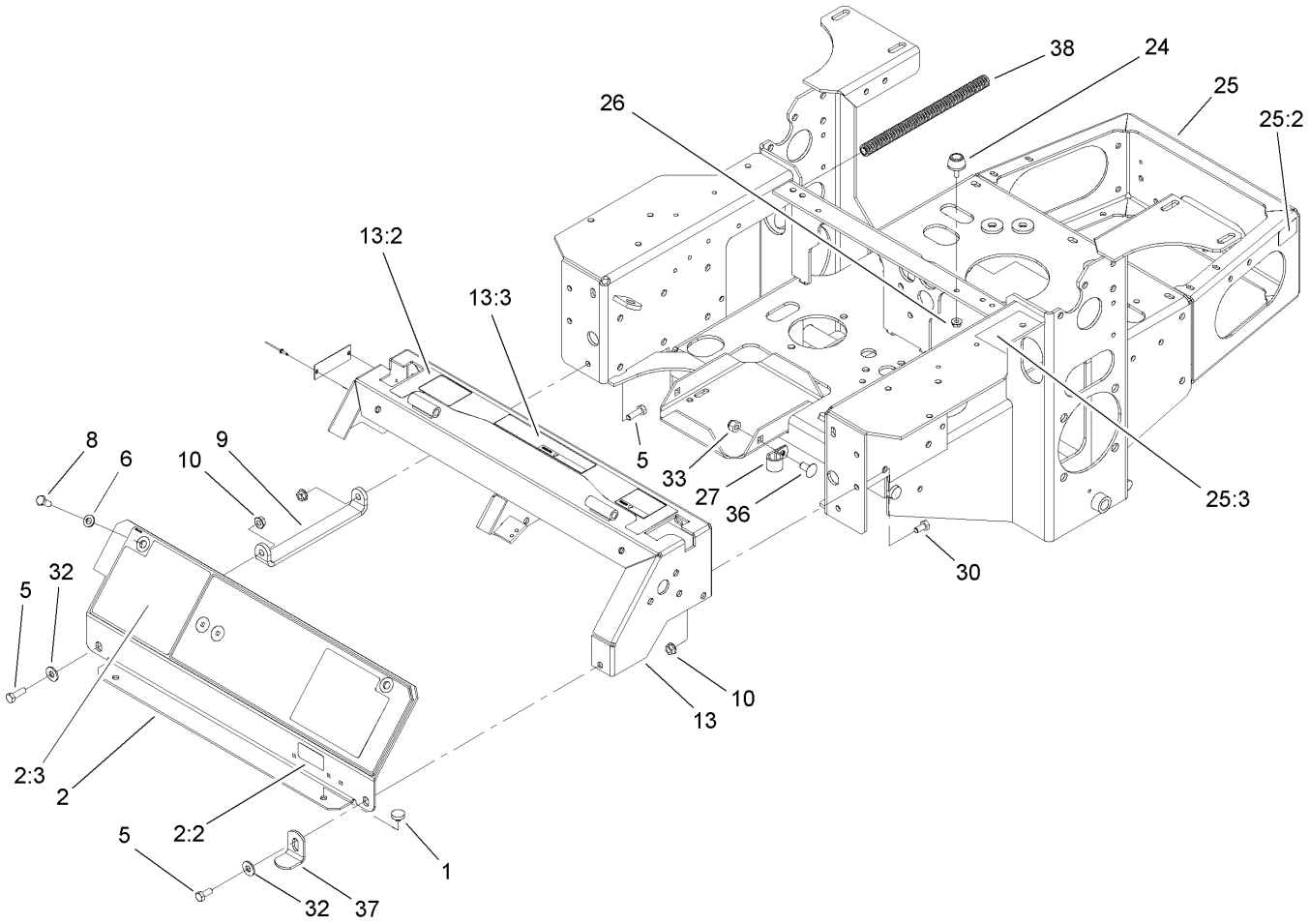
Caster Wheel Assembly No. 1-634662

Ref	Part No.	Qty.	Description
1	1-633582	1	Wheel And Tire ASM
1:1	1-633002	1	Tire
1:2	1-633583	1	Wheel
1:3	1-633584	2	Bearing-Cup
2	1-633581	2	Spacer-Bearing
3	1-633580	2	Seal-Bearing
4	1-633585	2	Bearing-Cone, Taper
5	1-633579	1	Spacer-Caster, Front
6	325-36	1	Screw-HH
7	3296-45	1	Nut-Lock, NI



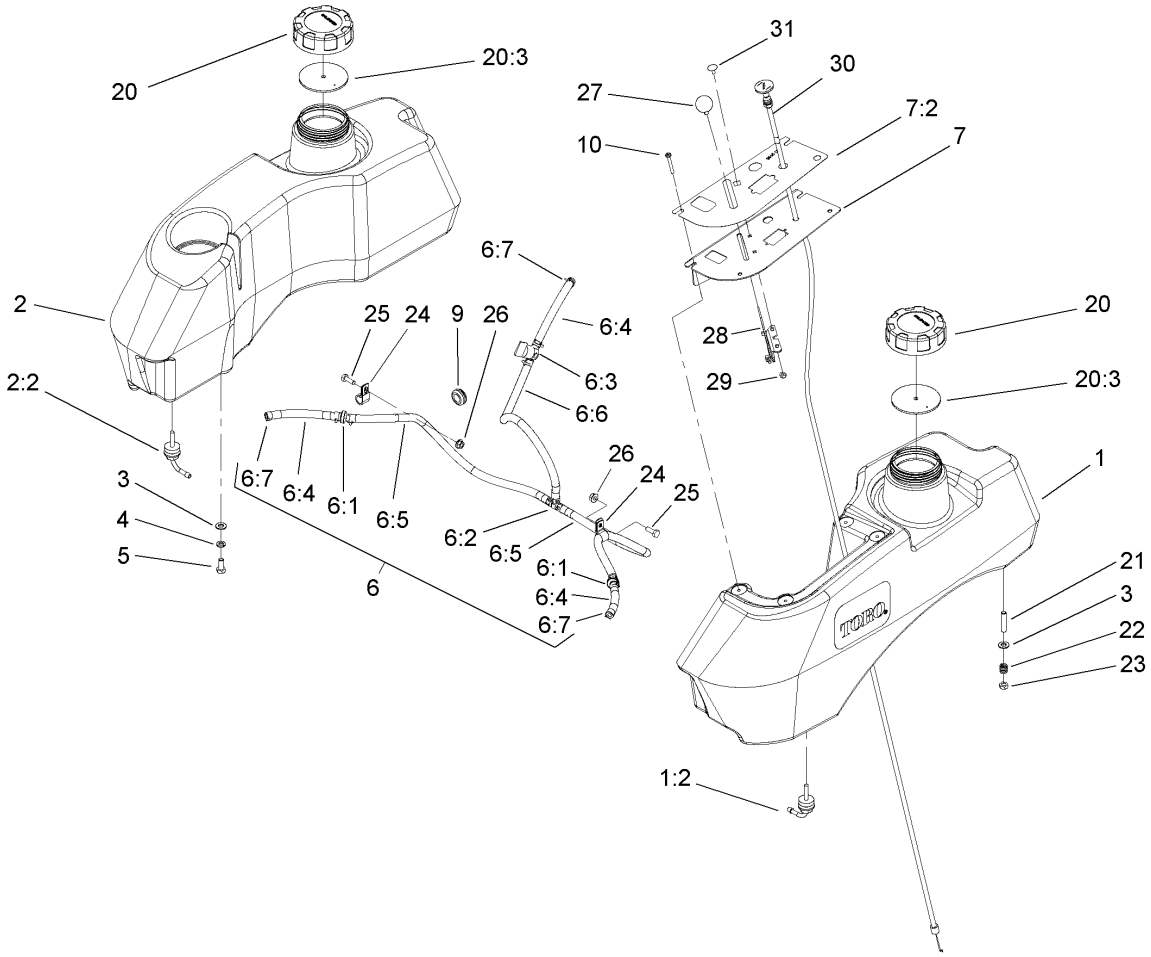
Height-of-Cut Assembly

Ref	Part No.	Qty.	Description
1	323-9	1	Screw-HH
2	32151-103	1	Ring-Snap
3	3290-357	5	Nut-HHF
4	3296-39	3	Nut-Lock, NI
5	1-652235-01	1	Plate-Lift, Deck
6	1-633080	1	Bushing-Lever, Lift
7	1-653230-01	1	Plate-Lift, Deck
9	323-6	1	Screw-HH
10	323-13	1	Screw-HH
11	1-633082	1	Bushing-Lever, Lift
12	103-2078-03	1	Handle-Lift
13	1-633295	1	Grip-Lever, Lift
14	106-9951	1	Hitch Pin ASM
15	302-19	1	Fitting-Grease
16	103-1918	2	Bushing
17	106-6598-03	1	Lift Arm ASM
18	1-633325	1	Spring-Compression
19	3256-24	1	Washer-Flat
20	1-633068	2	Arm-Lift, Deck
21	323-29	2	Screw-HH
22	108-1053	1	Decal-Deck Height, Outer
23	108-1052	1	Decal-Deck Height, Inner
26	323-8	1	Screw-HH



Main Frame Assembly

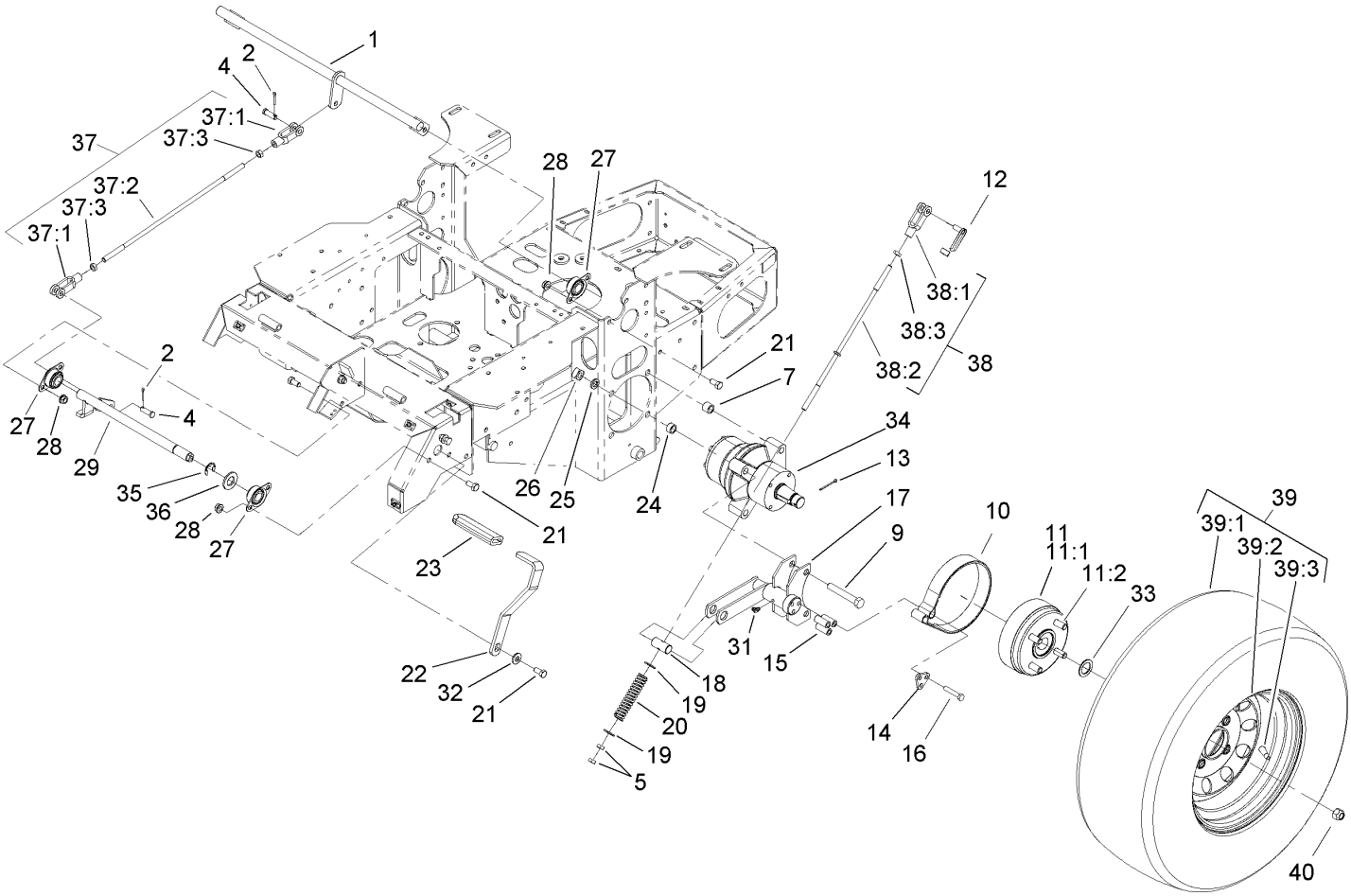
Ref	Part No.	Qty.	Description
1	1-513658	2	Bumper
2	108-1865	1	Panel ASM
2:2	98-4387	1	Decal-Protection, Ear
2:3	108-1054	1	Decal-Panel, Cover
5	322-5	3	Screw-HH
6	3256-23	2	Washer-Flat
8	322-3	2	Screw-HH
9	1-653089-03	1	Bracket
10	32128-20	6	Nut-HF
13	105-6124	1	Console
13:2	99-8936	2	Decal-Control, Motion
13:3	99-8944	1	Decal-Battery
24	1-523420	2	Bumper
25	108-2784	1	Main Frame ASM
25:2	106-5517	2	Decal-Surface, Hot
25:3	105-6183	1	Decal-Release, Drive
26	32128-33	2	Nut-HF
27	1-633396	1	Clip-Loom
30	322-2	4	Screw-HH
32	3256-3	2	Washer-Flat
33	3296-39	1	Nut-Lock, NI
36	3231-21	1	Screw-CARR
37	99-8947-03	1	Stop-Cover
38	24-7922	2	Cover-Shaft, Drive



Fuel System Assembly

Ref	Part No.	Qty.	Description
1	107-2146	1	LH Fuel Tank ASM
1:2	103-2605	1	Fitting-Fuel, Bulkhead
2	106-9975	1	RH Fuel Tank ASM
2:2	103-2605	1	Fitting-Fuel, Bulkhead
3	3256-23	8	Washer-Flat
4	1-805005	4	Washer-Lock
5	322-3	4	Screw-HH
6		1	Fuel Line ASM
6:1	99-5000	2	Valve-Check, Fuel
6:2	99-5005	1	Fitting-Tee, Barbed
6:3	1-603770	1	Valve-Fuel
6:4	99-7190	3	Hose-Fuel
6:5	99-3185	2	Hose-Fuel
6:6	106-8720	1	Hose-Fuel
6:7	1-303077	12	Clamp
7	108-2751	1	Control Panel ASM
7:2	108-1092	1	Decal-Panel, Control
9	1-543296	2	Grommet
10	32122-30	4	Screw-Pth
20	88-3980	2	Gas Cap ASM
20:3	88-4010	1	Gasket-Cap, Gas
21	1-633023	4	Stud
22	1-633349	4	Spring-Tank, Fuel
23	3296-47	4	Nut-Lock, NI

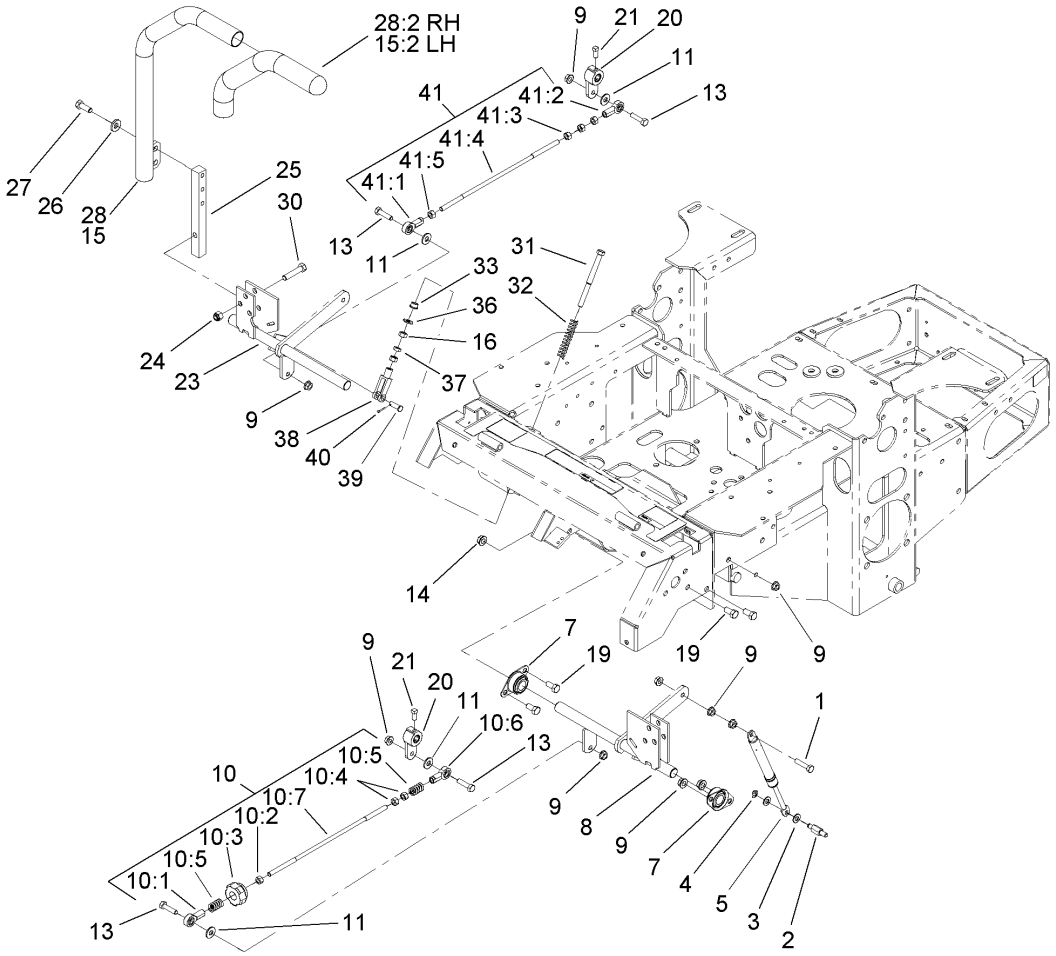
Ref	Part No.	Qty.	Description
24	1-513762	2	Clip-Loom
25	321-4	2	Screw-HH
26	32128-33	2	Nut-HF
27	1-513592	1	Knob-Ball
28	1-633696	1	Throttle Cable ASM
29	3296-2	2	Nut-Lock
30	1-603336	1	Control-Choke
31	1-807513	2	Bolt-CARR



Parking Brake Assembly

Ref	Part No.	Qty.	Description
1	1-652073-03	1	Crank-Brake, Park
2	3272-10	2	Pin-Cotter
4	1-808285	2	Pin-Clevis
5	3219-3	4	Nut-Hex
7	1-653068	4	Spacer-Wheel
9	325-13	8	Screw-HH
10	103-0355	2	Band-Brake
❷11		2	Hub And Wheel ASM
11:1	103-0589	1	Wheel Hub ASM
11:2	1-633926	4	Stud-Wheel
12	103-2399	2	Pin-Spring, Clevis
13	1-806800	2	Pin-Cotter
14	103-0374	2	Retainer-Band, Brake
15	103-0384	6	Spacer
16	322-9	6	Screw-HH
17	103-0352-03	2	Bracket-Brake
18	1-633144	2	Pin-Trunion
19	3256-4	4	Washer-Flat
20	1-633454	2	Spring-Brake
21	323-4	9	Screw-HH
22	1-653074-03	1	Handle-Brake, Park
23	1-633268	1	Grip-Lever, Brake
24	1-653069	4	Spacer-Wheel
25	3253-7	8	Washer-Lock

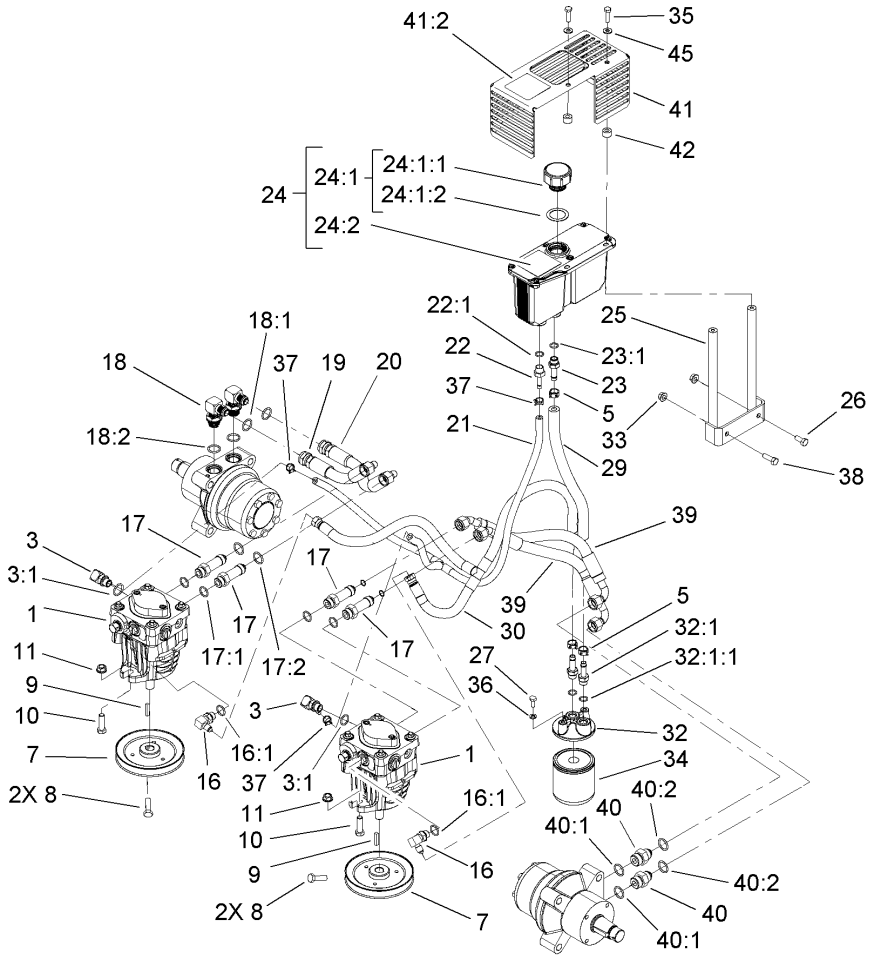
Ref	Part No.	Qty.	Description
26	103-0131	8	Nut-Square
27	1-633102	4	Bearing-Flange, Side
28	3290-357	8	Nut-HHF
29	103-3116	1	Shaft-Brake, Parking
31	1481	2	Fitting-Grease
32	98-5975	1	Washer-Belleville
33	1-523157	2	Washer-Spacer
34	103-5333	2	Motor-Wheel
35	32151-48	1	E-Ring
36	3256-28	1	Washer-Flat
37	103-4328	1	Brake Rod ASM
37:1	1-633131	2	Yoke-Linkage, Brake
37:2	1-653061	1	Linkage-Handle, Brake
37:3	3219-3	2	Nut-Hex
38	103-4329	2	Brake Rod ASM
38:1	1-633131	1	Yoke-Linkage, Brake
38:2	103-0356	1	Rod-Brake
38:3	3219-3	1	Nut-Hex
39	1-653159	2	Wheel And Tire ASM
39:1	1-653160	1	Tire
39:2	1-653161	1	Wheel
39:3	232-27	1	Stem-Valve
40	242-50	8	Nut-Lug



Motion Control Assembly

Ref	Part No.	Qty.	Description
1	1-403180	2	Screw-HH
2	103-4101	2	Pin-Damper
3	3256-23	4	Washer-Flat
4	32120-35	2	E-Ring
5	103-4079	2	Damper-Control, Motion
7	1-633102	4	Bearing-Flange, Side
8	103-4774	1	Control-Motion, LH
9	32128-20	12	Nut-HF
10	103-4326	1	Tracking Rod ASM
10:1	1-543017	1	Balljoint-RH
10:2	3219-2	1	Nut-Hex
10:3	103-3060	1	Knob-Tracking
10:4	1-804524	2	Nut
10:5	1-323245	2	Spring-Compression
10:6	1-633152	1	Balljoint-Thread, LH
10:7	103-3066	1	Link-Rod, Tracking
11	3256-3	4	Washer-Flat
13	322-6	4	Screw-HH
14	3290-357	6	Nut-HHF
15	106-9982	1	LH Lever ASM
15:2	106-9987	1	Grip-Control, Motion
16	3219-2	4	Nut-Hex
19	323-4	6	Screw-HH
20	103-3717	2	Arm-Control

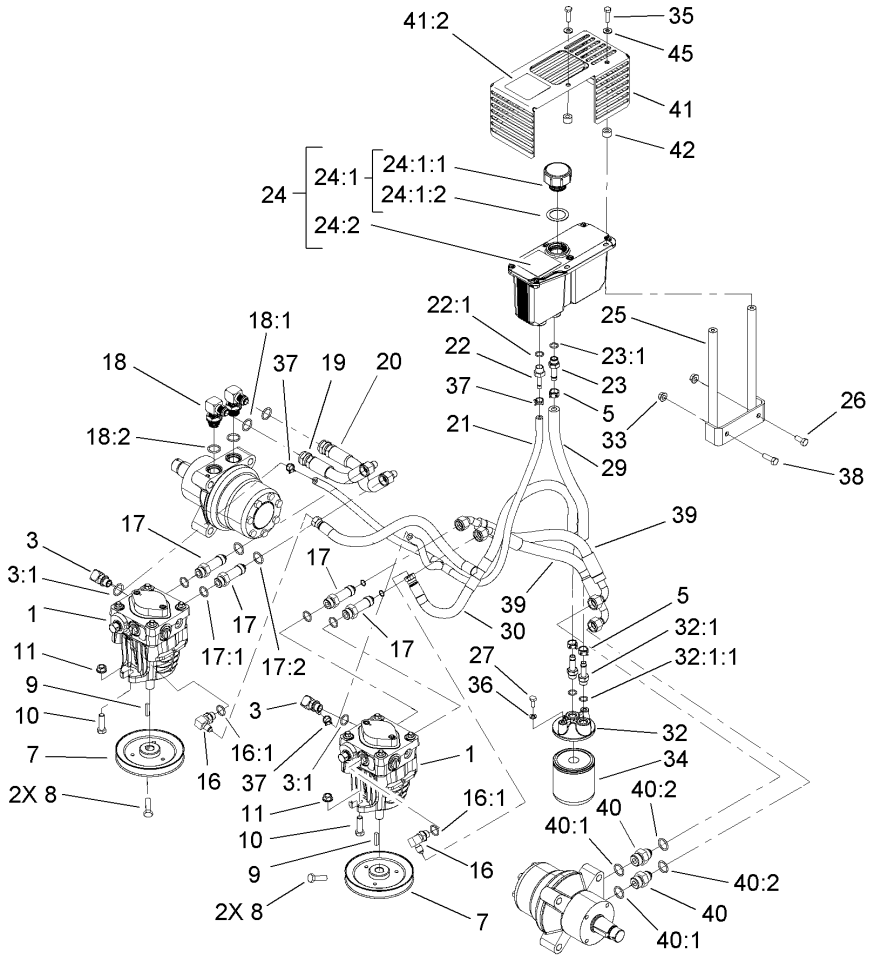
Ref	Part No.	Qty.	Description
21	1-803022	2	Screw-Set
23	103-4773	1	Control-Motion, RH
24	3296-39	6	Nut-Lock, NI
25	103-0407	2	Arm-Shaft, Control
26	98-5975	4	Washer-Belleville
27	323-6	4	Screw-HH
28	106-9983	1	RH Lever ASM
28:2	106-9987	1	Grip-Control, Motion
30	323-9	6	Screw-HH
31	1-603737	2	Bolt-Return, Neutral
32	1-603807	2	Spring-Return, Neutral
33	1-603735	2	Bushing-Flanged
36	3256-2	2	Washer-Flat
37	3220-2	2	Nut-Jam
38	1-303105	2	Yoke-Adjustable
39	1-808280	2	Pin-Clevis
40	3272-5	2	Pin-Cotter
41	103-4327	1	Tracking ASM
41:1	1-543017	1	Balljoint-RH
41:2	1-633152	1	Balljoint-Thread, LH
41:3	1-804524	1	Nut
41:4	103-3066	1	Link-Rod, Tracking
41:5	3219-2	3	Nut-Hex



Hydraulic System Assembly

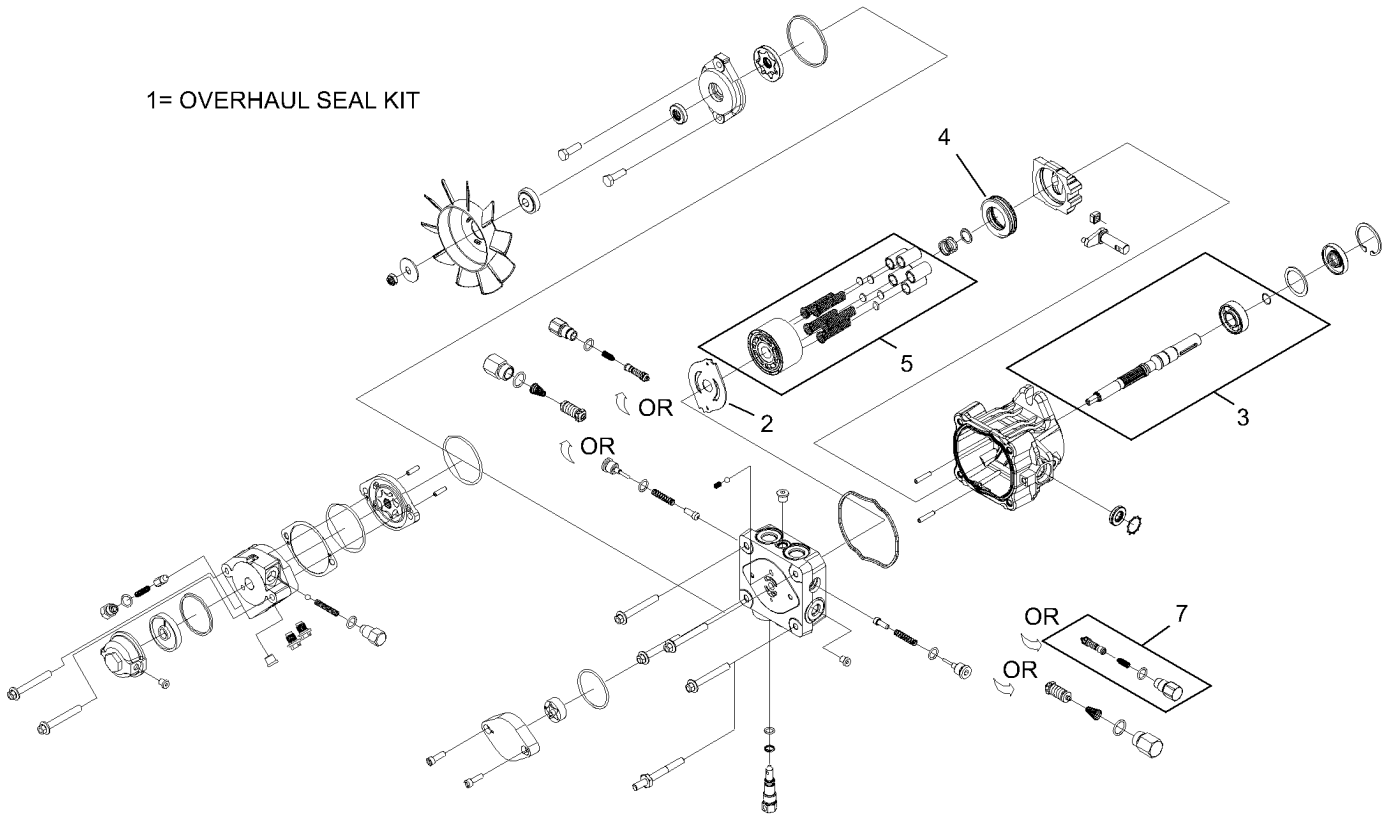
Ref	Part No.	Qty.	Description
1	103-1942	2	Pump-HYD
3	103-1799	2	Elbow-90 DEG
3:1	237-42	1	O-Ring
5	103-1988	3	Clamp-Hose
7	1-653156	2	Pulley
8	1-803050	4	Screw-Set
9	1-807272	2	Key
10	323-7	4	Screw-HH
11	3290-357	4	Nut-HHF
16	103-1802	2	Fitting-Hyd, 90 DEG
16:1	1-603921	1	O-Ring
17	103-1940	4	Adapter-Hyd, Straight
17:1	237-79	1	O-Ring
17:2	1-603992	1	O-Ring
18	1-633605	2	Fitting-Hyd, 90 DEG
18:1	1-603992	1	O-Ring
18:2	237-80	1	O-Ring
19	100-3964	1	Hose-Front
20	100-3965	1	Hose-Rear
21	103-2357	1	HYD Hose ASM
22	103-1801	1	Adapter-Straight
22:1	237-42	1	O-Ring
23	103-1912	1	Adapter-Straight
23:1	237-42	1	O-Ring

Ref	Part No.	Qty.	Description
24	103-1947	1	HYD Reservoir ASM
❷24:1		1	Reservoir-HYD
24:1:1	103-1948	1	Cap-Reservoir, HYD
24:1:2	103-1949	1	Gasket-Cap
24:2	1-523552	1	Decal-Tank, HYD
25	103-3071-03	1	Stand-Reservoir
26	322-3	1	Screw-HH
27	321-3	2	Screw-HH
29	103-3077	1	HYD Hose ASM
30	103-2930	1	HYD Hose ASM
32	103-2889	1	Filter Head ASM
32:1	103-1912	2	Adapter-Straight
32:1:1	237-42	1	O-Ring
33	32128-20	2	Nut-HF
34	1-633752	1	Filter-Hyd, Winter
34	1-633750	1	Filter-HYD
35	321-8	2	Screw-HH
36	1-805004	2	Washer-Lock
37	103-1716	3	Clamp-Hose
38	322-5	1	Screw-HH
39	105-6187	2	Hose ASM
40	1-603991	2	Fitting-Straight
40:1	237-80	1	O-Ring
40:2	1-603992	1	O-Ring



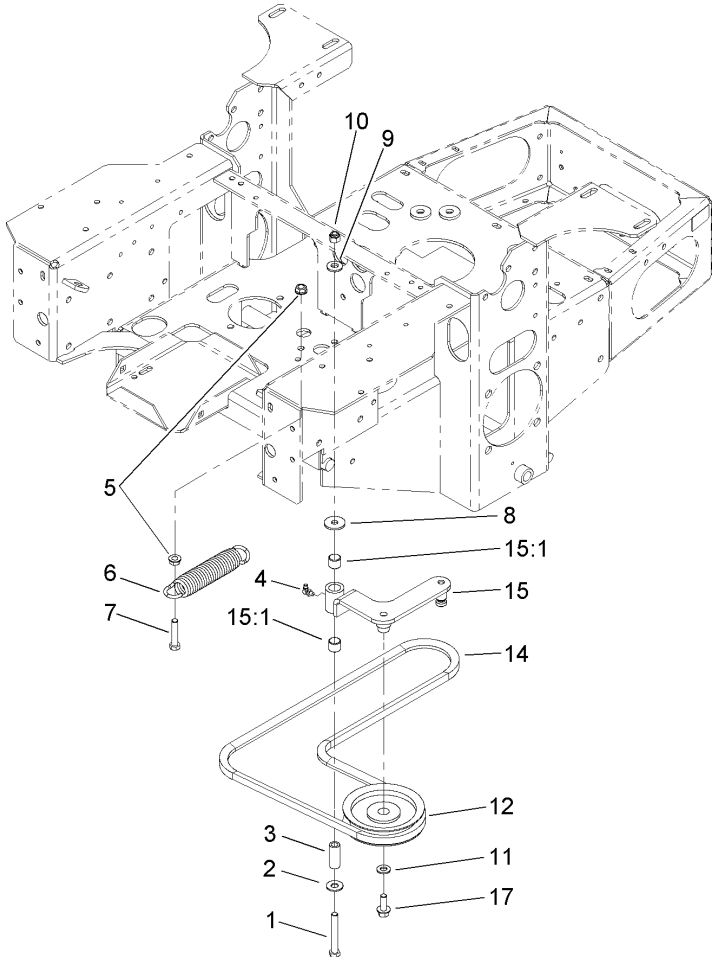
Hydraulic System Assembly (continued)

Ref	Part No.	Qty.	Description
41	107-2130	1	Shield ASM
41:2	107-2131	1	Decal-Surface, Hot
42	105-3619	2	Spacer
45	3256-22	2	Washer-Flat



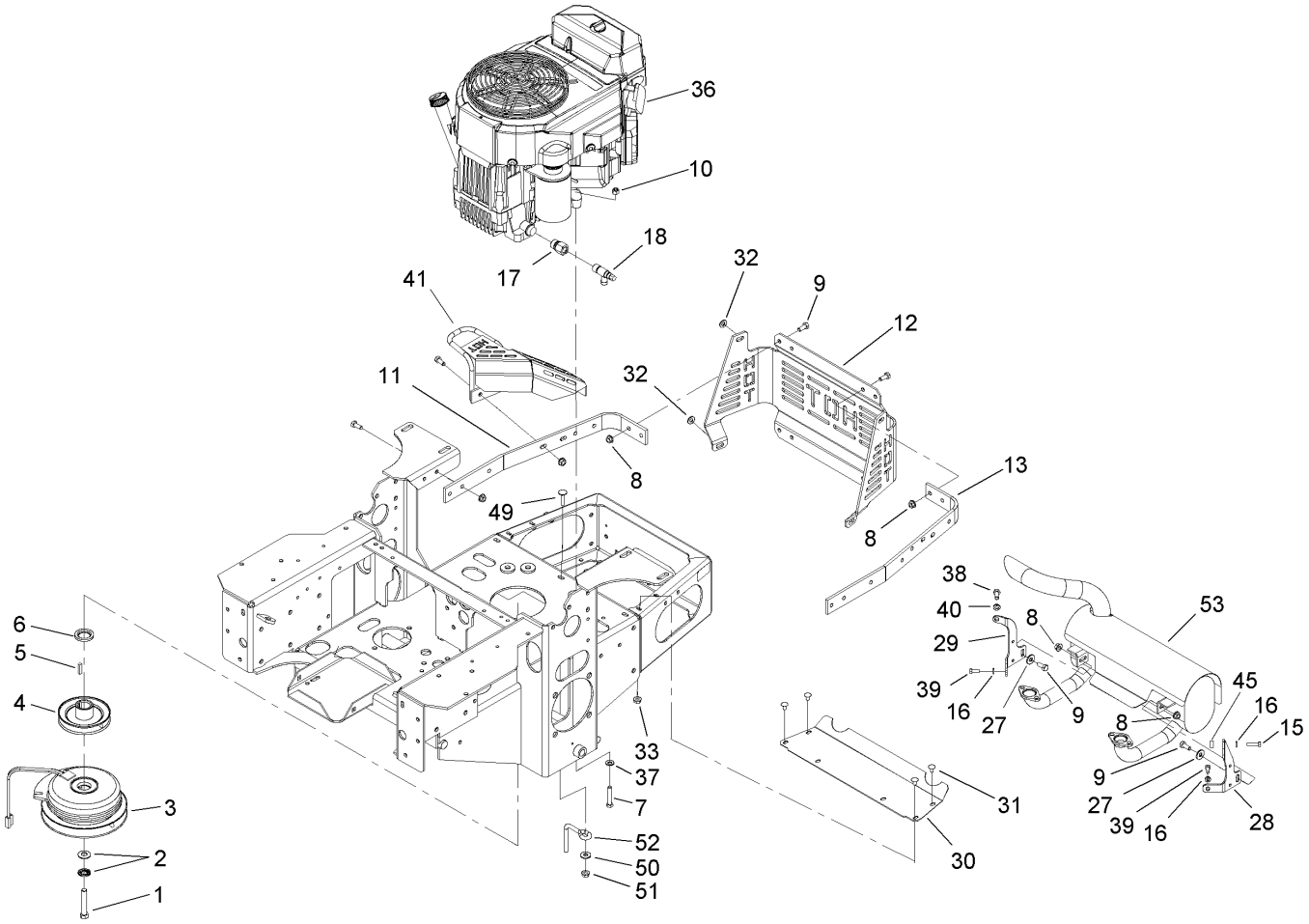
Hydraulic Pump Assembly No. 103-1942

Ref	Part No.	Qty.	Description
1	105-6184	1	Seal Kit
2	105-6185	1	Plate-Valve
3	103-2664	1	Input Shaft Kit
4	94-6922	1	Bearing-Thrust
5	103-2666	1	Cylinder Block Kit
7	106-2053	1	Shock Valve Kit



Pump Idler and Belt Assembly

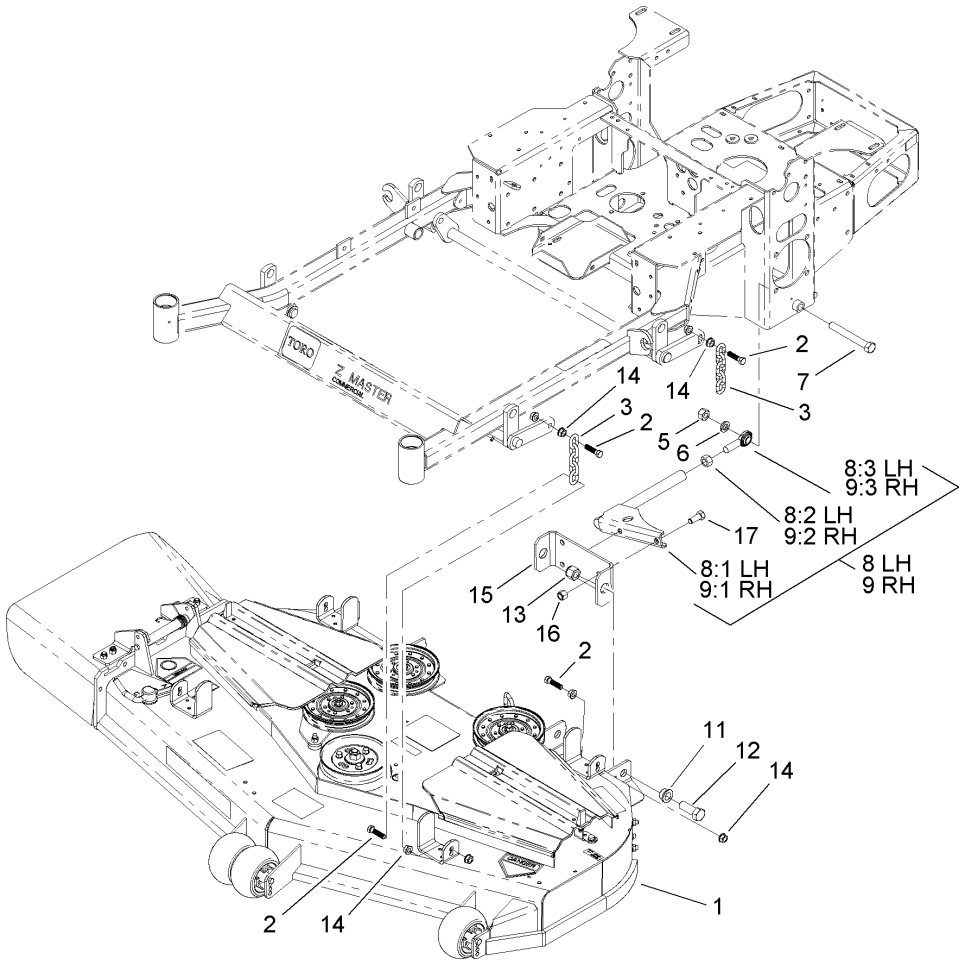
Ref	Part No.	Qty.	Description
1	323-13	1	Screw-HH
2	3256-4	1	Washer-Flat
3	1-603044	1	Bushing
4	302-40	1	Fitting-Grease
5	3290-357	2	Nut-HHF
6	103-4480	1	Spring-Extension
7	323-9	1	Screw-HH
8	63-8410	1	Washer
9	98-5975	1	Washer-Belleville
10	3296-39	1	Nut-Lock, NI
11	3256-24	1	Washer-Flat
12	1-603843	1	Pulley-Idler
14	107-3960	1	Belt
15	103-4482	1	Idler Arm ASM
15:1	103-4681	2	Sleeve-Bearing
17	3234-11	1	Screw-HHF



Engine, Clutch and Muffler Assembly

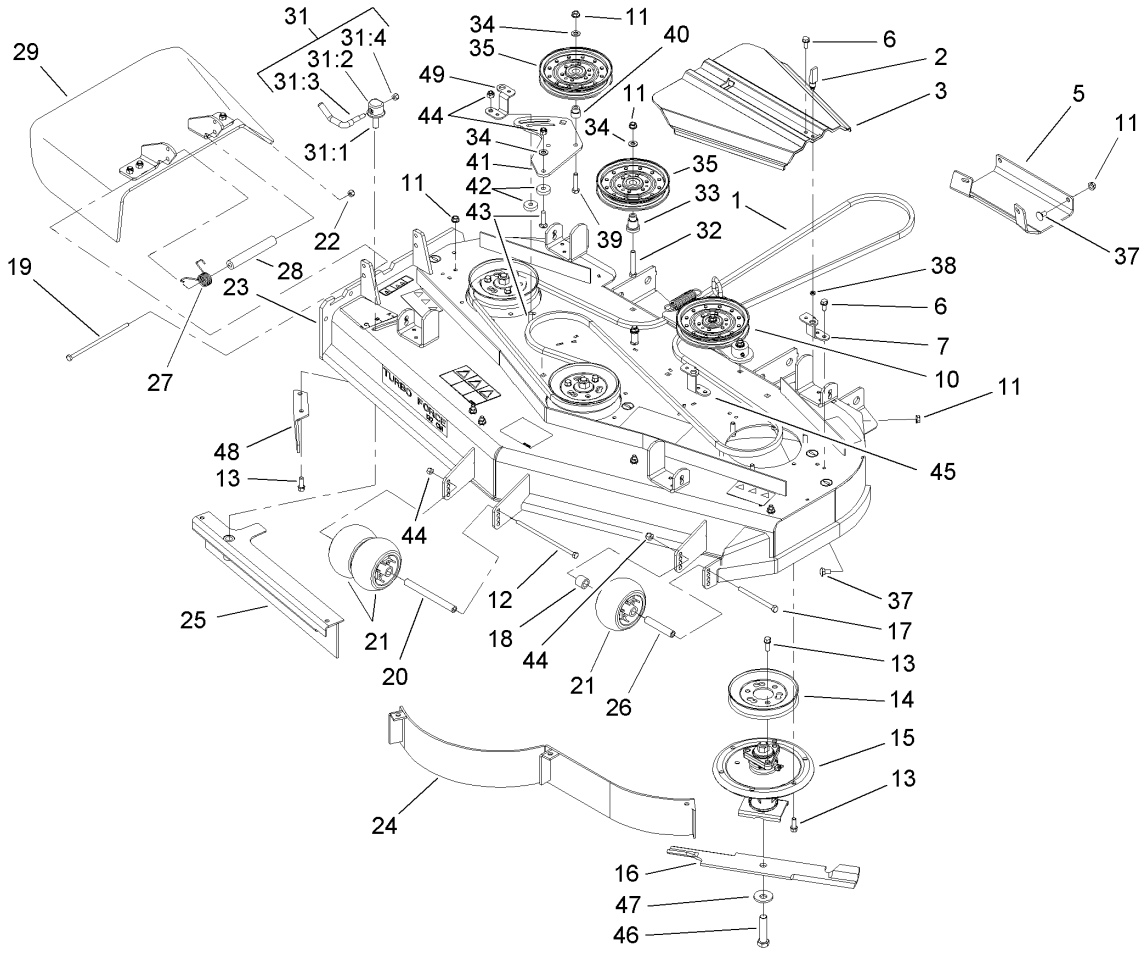
Ref	Part No.	Qty.	Description
1	3212-12	1	Screw-HH
2	1-603610	2	Washer-Spring
3	103-0690	1	Clutch
4	103-3913	1	Pulley
5	1-807259	1	Key
6	103-2308	1	Spacer-Crankshaft
7	322-9	4	Screw-HH
8	32128-20	29	Nut-HF
9	322-3	23	Screw-HH
10	3296-29	4	Nut-Lock, NI
11	103-3078-03	1	Strap-Guard, RH
12	103-3219-03	1	Guard-Rear
13	103-3164-03	1	Strap-Guard, LH
15	33113-025	1	Screw-HH
16	1-805004	3	Washer-Lock
17	103-1966	1	Adapter
18	103-1965	1	Valve-Drain, Oil
27	3256-3	3	Washer-Flat
28	103-2993-03	1	Bracket-Muffler, LH
29	103-2994-03	1	Bracket-Muffler, RH
30	103-2740-03	1	Deflector-Short
31	3229-10	4	Screw-CARR
32	3256-23	4	Washer-Flat
33	32128-33	4	Nut-HF

Ref	Part No.	Qty.	Description
❷36		1	Engine-Kawasaki, Fh680v-As21
37	1-303334	4	Washer-Spring
38	33114-020	1	Screw-HH
39	33113-016	2	Screw-HH
40	1-805005	1	Washer-Lock
41	103-3218-03	1	Guard-Tailpipe
45	103-3096	1	Spacer
49	3230-3	1	Screw-CARR
50	3256-3	1	Washer-Flat
51	32128-20	1	Nut-HF
52	108-1058	1	Rod-Belt
53	103-3427	1	Muffler Kit



Deck Connection Assembly

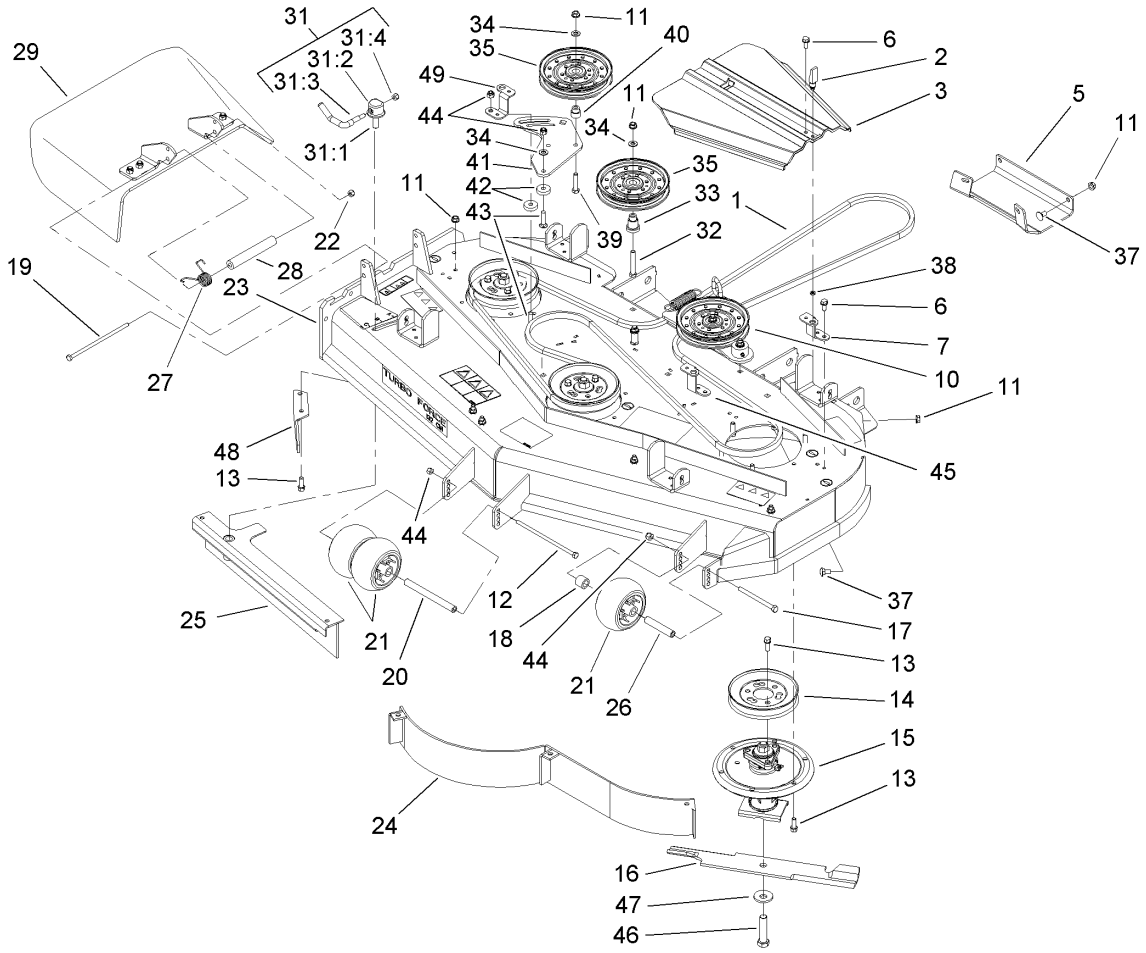
Ref	Part No.	Qty.	Description
1	107-3190	1	Deck ASM
2	103-1898	8	Screw-HH
3	1-633447	4	Chain-Lift, Deck
5	3217-11	2	Nut-Hex
6	3253-8	2	Washer-Lock
7	1-800344	2	Screw-HH
8	107-3150	1	LH Strut ASM
8:1	107-3103-01	1	Strut-Compact
8:2	3219-6	1	Nut-Hex
8:3	1-633029	1	Balljoint-Spherical
9	107-1659	1	RH Strut ASM
9:1	107-3103-01	1	Strut-Compact
9:2	1-633029	1	Balljoint-Spherical
9:3	3219-6	1	Nut-Hex
11	93-2877	4	Bushing
12	328-24	4	Screw-HH
13	3296-51	4	Nut-Lock, NI
14	32128-37	16	Nut-HF
15	107-3100-01	2	Base-Strut
16	3296-23	4	Nut-Lock, NI
17	325-5	4	Screw-HH



Deck Assembly No. 107-1671

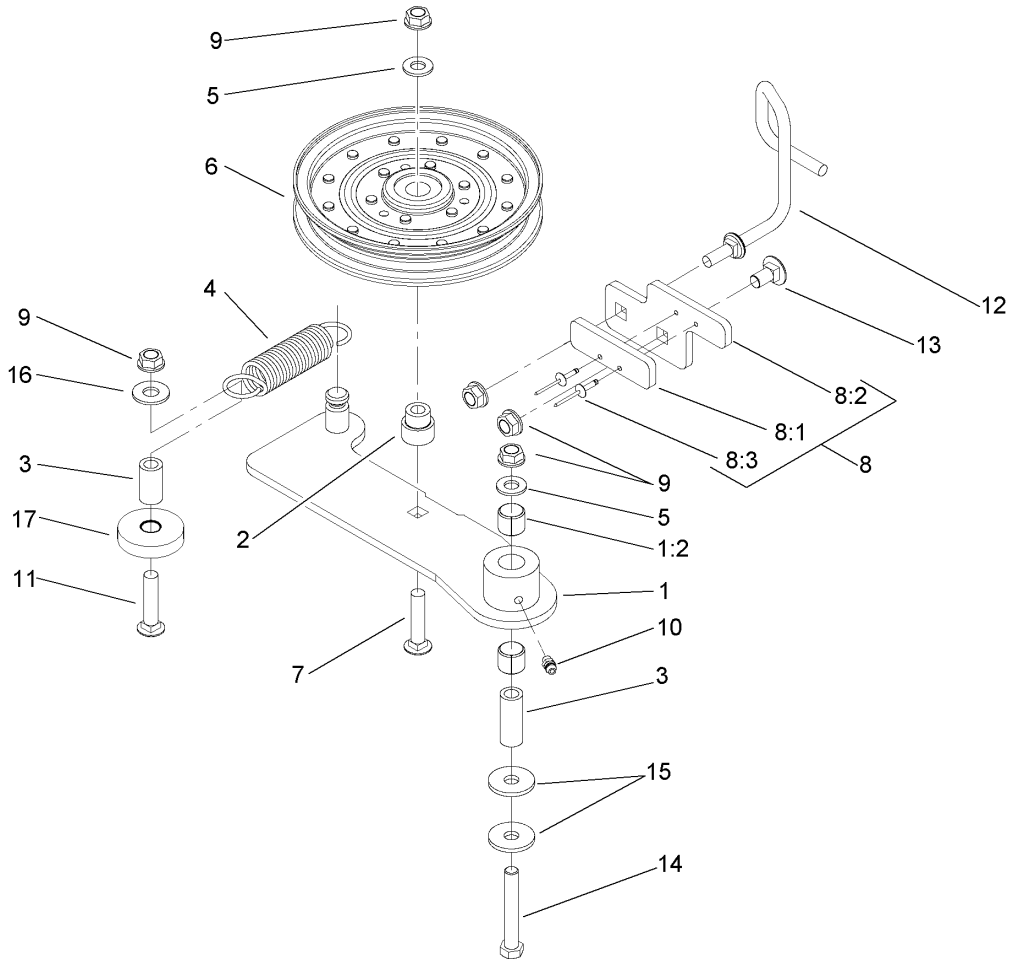
Ref	Part No.	Qty.	Description
1	106-7369	1	Belt-V
2	74-5950	2	Latch-Swell
3	107-8536	2	Cover-Belt
5	106-7358-01	1	Plate-Skid
6	32144-70	6	Screw-HH
7	108-2177-01	3	Bracket-Cover, Tall
❷10		1	Idler ASM
11	3290-357	36	Nut-HHF
12	323-28	1	Screw-HH
13	92-1624	33	Screw
14	107-1683	3	Pulley
15	107-8504	3	Spindle ASM
16	105-7781-03	3	Blade-Hi Flow, 18in
17	323-23	1	Screw-HH
18	98-7913	1	Tube-Spacer
19	322-50	1	Screw-HH
20	98-5967	1	Spacer-Wheel
21	1-603299	3	Roller-Anti Scalp
22	3296-29	1	Nut-Lock, NI
23	107-1668	1	Deck Asm, With Decals
24	105-7754-01	1	Baffle ASM
25	105-7755-01	1	Baffle ASM
26	98-7912	1	Tube-Spanner
27	104-8554	1	Spring-Torsion

Ref	Part No.	Qty.	Description
28	105-4622	1	Spacer
29	108-4060	1	Rubber Deflector ASM
31	107-1664	1	Lever ASM
31:1	106-3239	1	Screw-Lock
31:2	107-1644	1	Cap-Lock
31:3	106-3241	1	Lever-Lock
31:4	3296-29	1	Nut-Lock, NI
32	323-12	1	Screw-HH
33	106-3214	1	Mount-Pulley
34	3256-24	3	Washer-Flat
35	1-633109	2	Idler-Flat
37	3231-1	10	Screw-CARR
38	99-3058	2	Washer
39	323-9	1	Screw-HH
40	1-603496	1	Bushing-Idler
41	107-8516-01	1	Plate-Idler
42	105-7788	2	Spacer
43	3231-4	2	Screw-CARR
44	3296-39	4	Nut-Lock, NI
45	105-7789-01	1	Bracket-Cover, Belt
46	103-0862	3	Screw-Cap
47	103-0865	3	Washer-Blade Bolt, Heavy
48	106-3216-01	1	Baffle-Discharge
49	108-2178-01	1	Bracket-Cover, Short



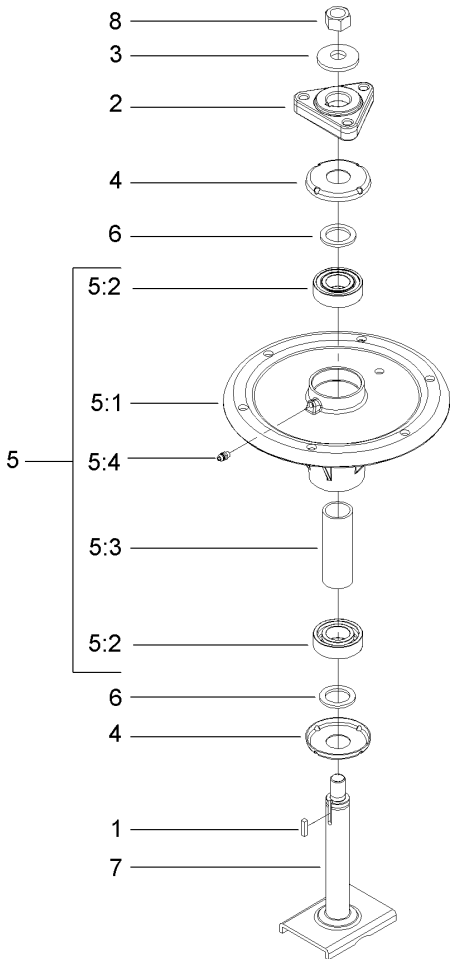
Deck Assembly No. 107-1671 (continued)

Ref	Part No.	Qty.	Description
❶99	105-7795-03	3	Blade-Low Flow
❶99	105-7794-03	3	Blade-Med Flow
❶99	105-7779-03	3	Blade-Recycler
❶99	105-7796-03	3	Blade-Atomic



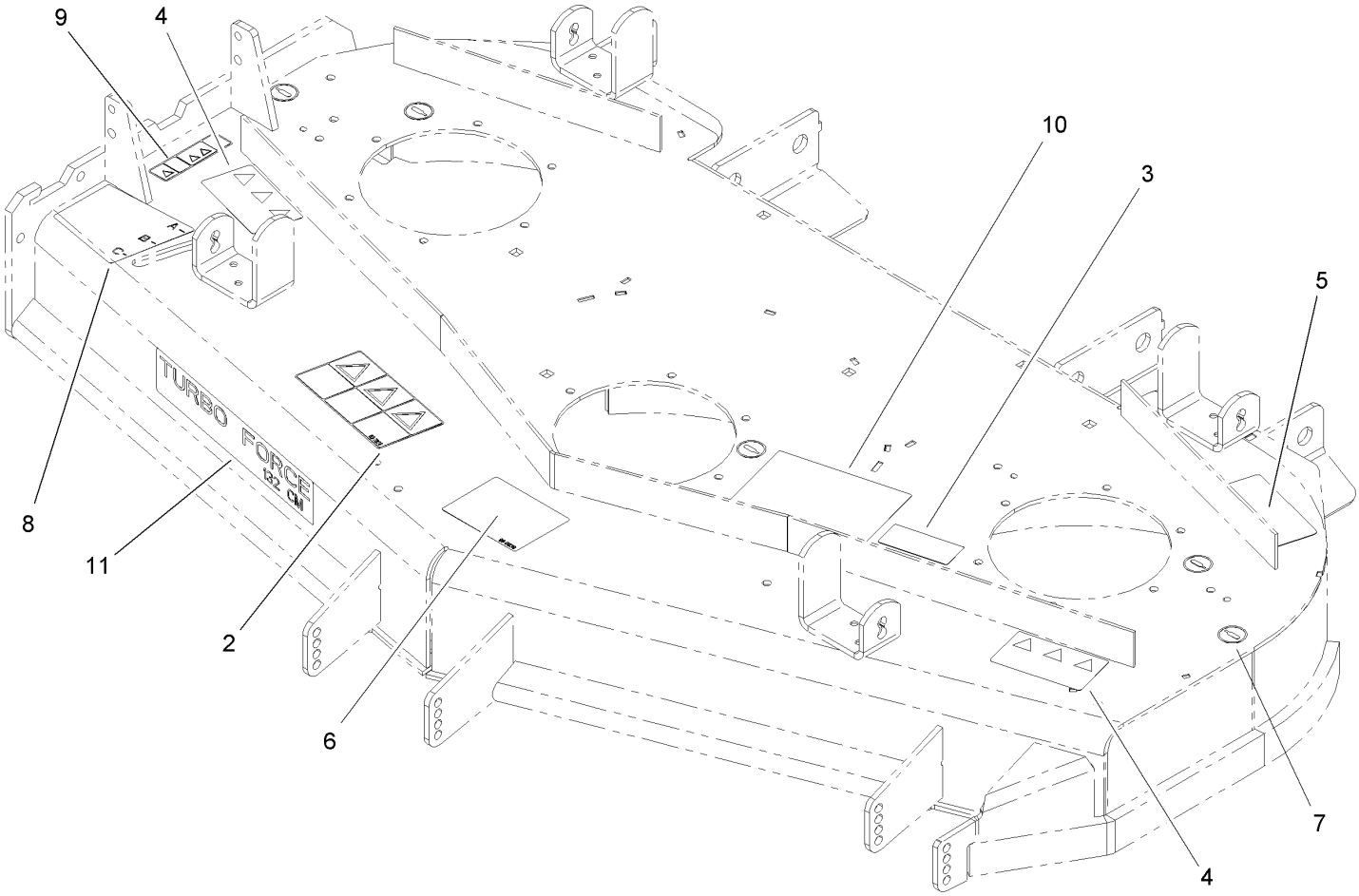
Idler Assembly

Ref	Part No.	Qty.	Description
1	108-4062	1	Idler Arm ASM
1:2	103-4681	2	Sleeve-Bearing
2	1-603496	1	Bushing-Idler
3	1-603044	2	Bushing
4	1-603402	1	Spring-Extension
5	3256-24	2	Washer-Flat
6	1-633109	1	Idler-Flat
7	3231-6	1	Screw-CARR
❷8		1	Stop Pad ASM
8:1	106-3229	1	Pad-Bumber
8:2	107-1697-01	1	Plate-Stop
8:3	3269-24	2	Rivet
9	3290-357	5	Nut-HHF
10	302-5	1	Fitting-Grease
11	3231-31	1	Screw-CARR
12	108-4072	1	Guide-Belt
13	3231-1	1	Screw-CARR
14	323-12	1	Screw-HH
15	2844	2	Washer
16	3256-4	1	Washer-Flat
17	108-2239	1	Stop-Plastic



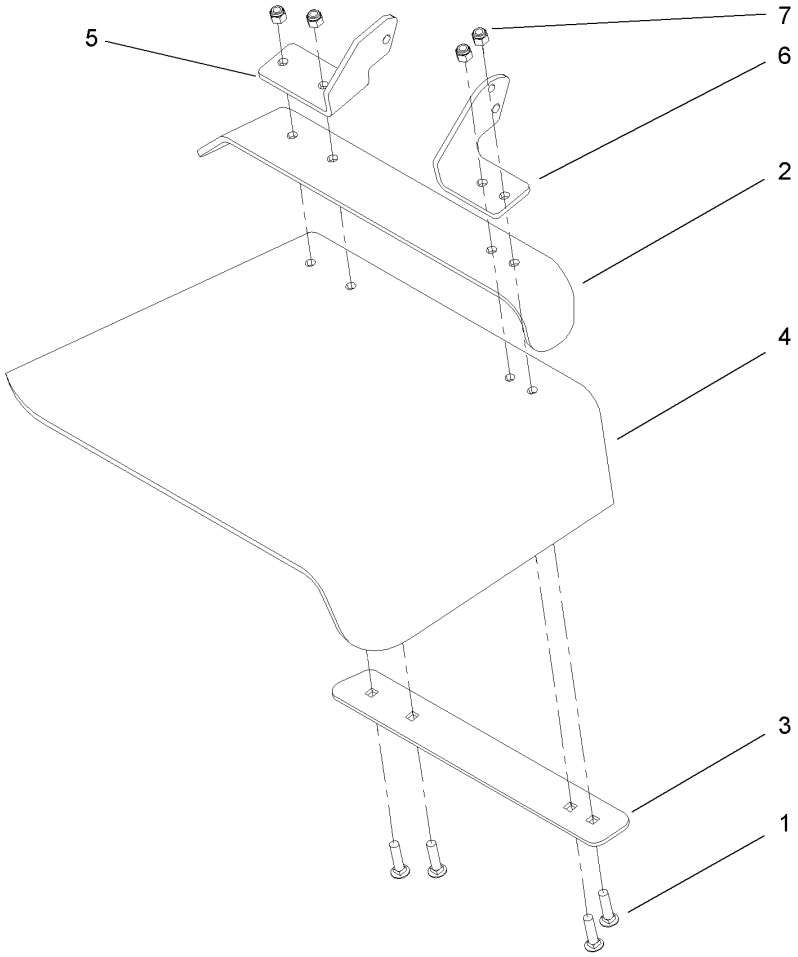
Spindle Assembly No. 107-8504

Ref	Part No.	Qty.	Description
1	10-8040	1	Key-Square
2	106-3277	1	Hub-Pulley
3	103-0865	1	Washer-Blade Bolt, Heavy
4	106-3204	2	Shield-Bearing
❷5		1	Spindle Bearing ASM
5:1	106-3211	1	Housing-Spindle
5:2	113514	2	Bearing-Ball
5:3	107-8502	1	Spacer-Bearing
5:4	302-5	1	Fitting-Grease
6	3-8514	2	Washer-Thrust
7	107-8501	1	Spindle ASM
8	3219-6	1	Nut-Hex



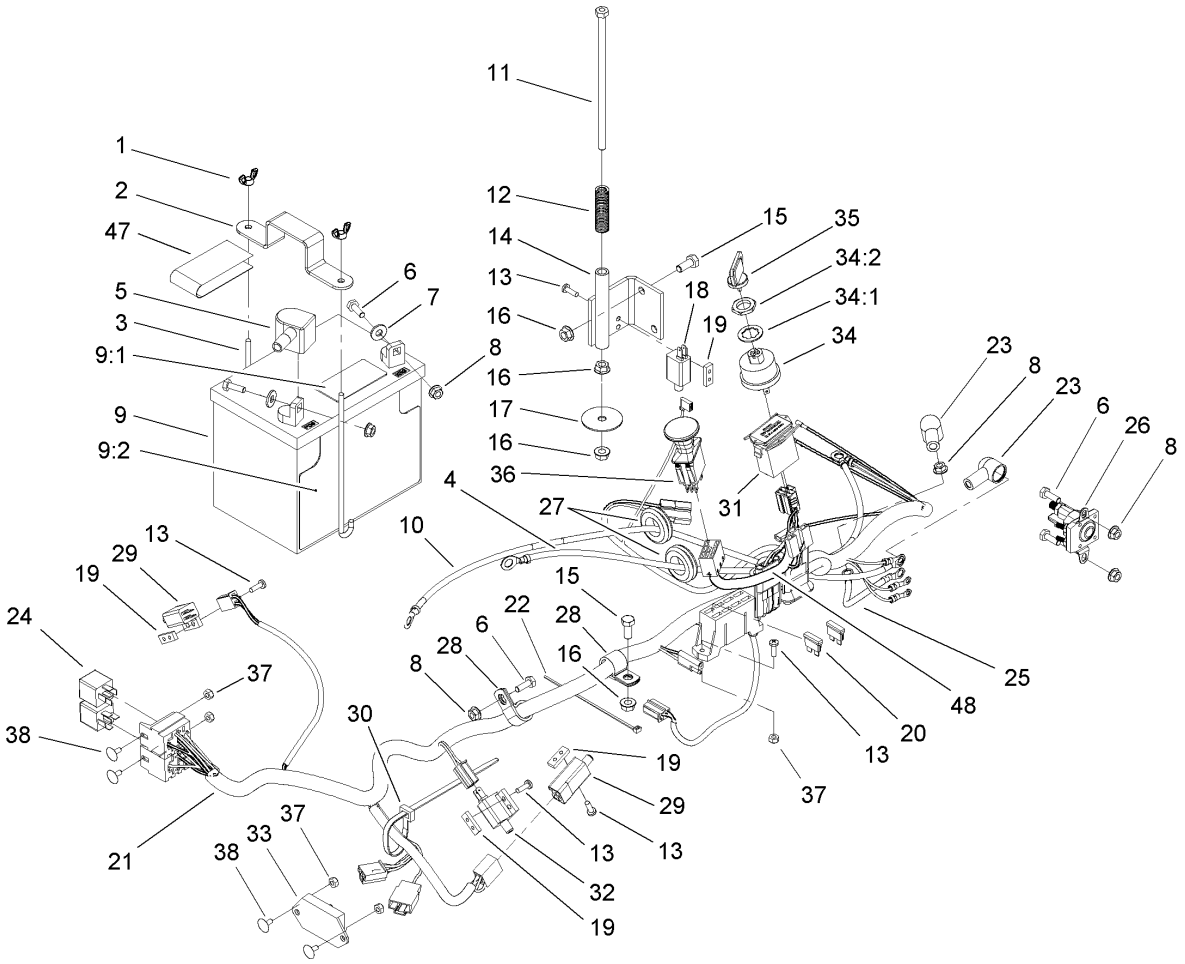
Deck Decal Assembly No. 107-1668

Ref	Part No.	Qty.	Description
2	93-7824	1	Decal-Danger
3	98-1977	1	Decal-Warning
4	93-7010	2	Decal-Danger
5	93-7818	1	Decal-Torque, Blade Bolt
6	99-8939	1	Decal-Anti Scalp
7	58-6520	5	Decal-Grease
8	107-3993	1	Decal-Adjustment, Baffle
9	93-7828	1	Decal-Warning, Deflector
10	107-1686	1	Decal-Service Aid
11	107-1692	1	Decal



Rubber Deflector Assembly No. 108-4060

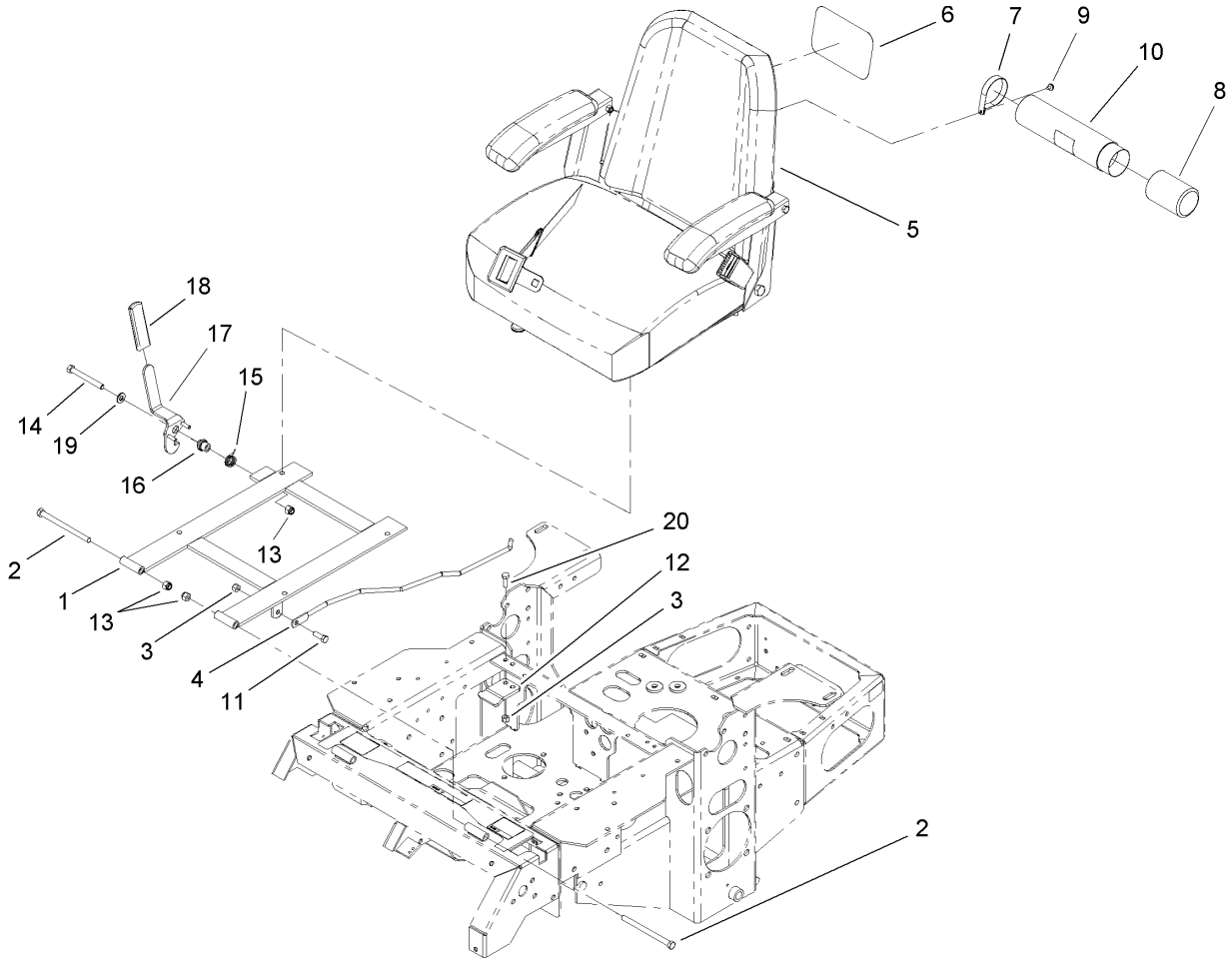
Ref	Part No.	Qty.	Description
1	3231-4	4	Screw-CARR
2	106-3246-01	1	Deflector
3	106-3248-03	1	Strap-Discharge
4	107-1617	1	Defelector-Rubber
5	108-4059-01	1	Plate-Hinge, Rear
6	108-4058-01	1	Plate-Hinge, Front
7	3296-39	4	Nut-Lock, NI


11
1
2
47
12
14
13
16
15
35
34:2
34:1
34
18
19
5
3
9:1
6
7
8
16
17
16
9
9:2
36
4
27
31
23
8
23
6
26
8
10
15
22
28
6
28
16
8
25
48
20
13
37
30
19
29
13
13
32
19
24
37
38
21
33
37
38
13
29
19
13

Electrical System Assembly

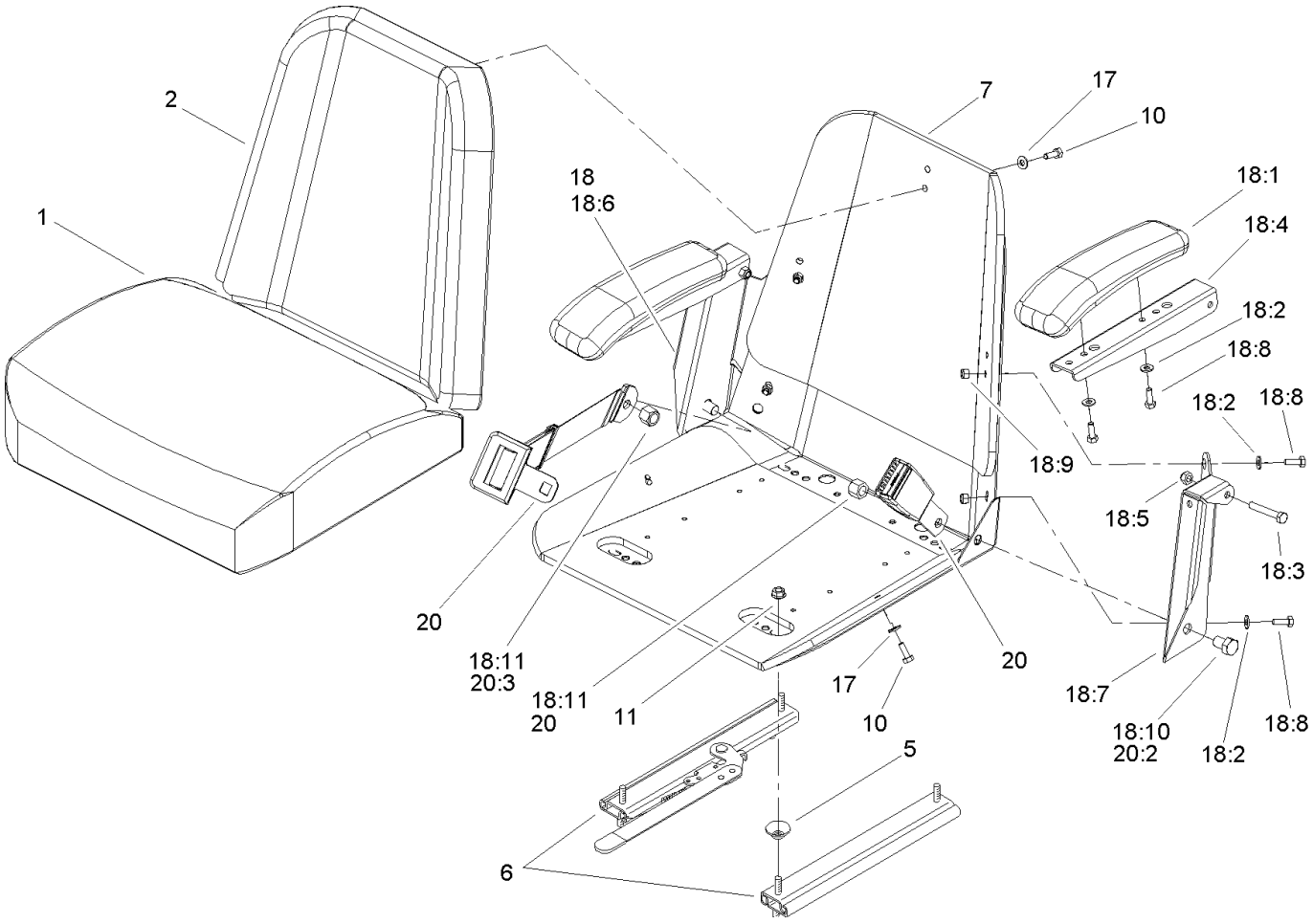
Ref	Part No.	Qty.	Description
1	1-543792	2	Wingnut
2	1-633652-03	1	Strap-Holddown
3	1-633651	2	Bolt-Holddown
4	103-0705	1	Cable-Ground, Negative
5	1-543391	1	Insulator-Battery
6	321-4	5	Screw-HH
7	3256-2	2	Washer-Flat
8	32128-33	6	Nut-HF
9	105-1692	1	Battery
9:1	104-4163	1	Decal-Battery
9:2	104-4164	1	Decal-Battery
10	103-0707	1	Cable-Battery, Positive
11	1-800282	1	Screw-HH
12	1-523415	1	Spring-Switch, Seat
13	1-803075	10	Screw-Head, Truss
14	1-652072-03	1	Bracket-Switch, Seat
15	322-3	3	Screw-HH
16	32128-20	5	Nut-HF
17	1-653036	1	Washer
18	1-513152	1	Switch-Closed, Normally
19	1-633181	4	Plate-Tapped
20	1-816001	2	Fuse-Blade Type, 20 Amp
21	107-8051	1	Harness-Electrical
22	1-303287	3	Tie-Plastic

Ref	Part No.	Qty.	Description
23	1-543393	3	Insulator-Solenoid
24	1-643275	2	Relay
25	1-633306	1	Wire-Starter
26	1-513075	1	Switch-Solenoid
27	1-543286	3	Grommet
28	1-633396	2	Clip-Loom
29	1-513051	2	Switch-Open, Normally
30	1-303335	4	Tie-Plastic
31	1-513374	1	Meter-Hour
32	1-633111	1	Switch
33	100-6186	1	Module-Delay, Seat
34	88-9830	1	Key Switch ASM
34:1	3254-5	1	Washer-Tooth
34:2	218-461	1	Nut-HH
35	63-8360	2	Key-Ignition
36	1-633673	1	Switch-Delta
37	3296-2	6	Nut-Lock
38	1-807513	4	Bolt-CARR
47	107-9309	1	Decal-Instructions, Charging
48	107-8054	1	Harness-Electrical, Control Panel



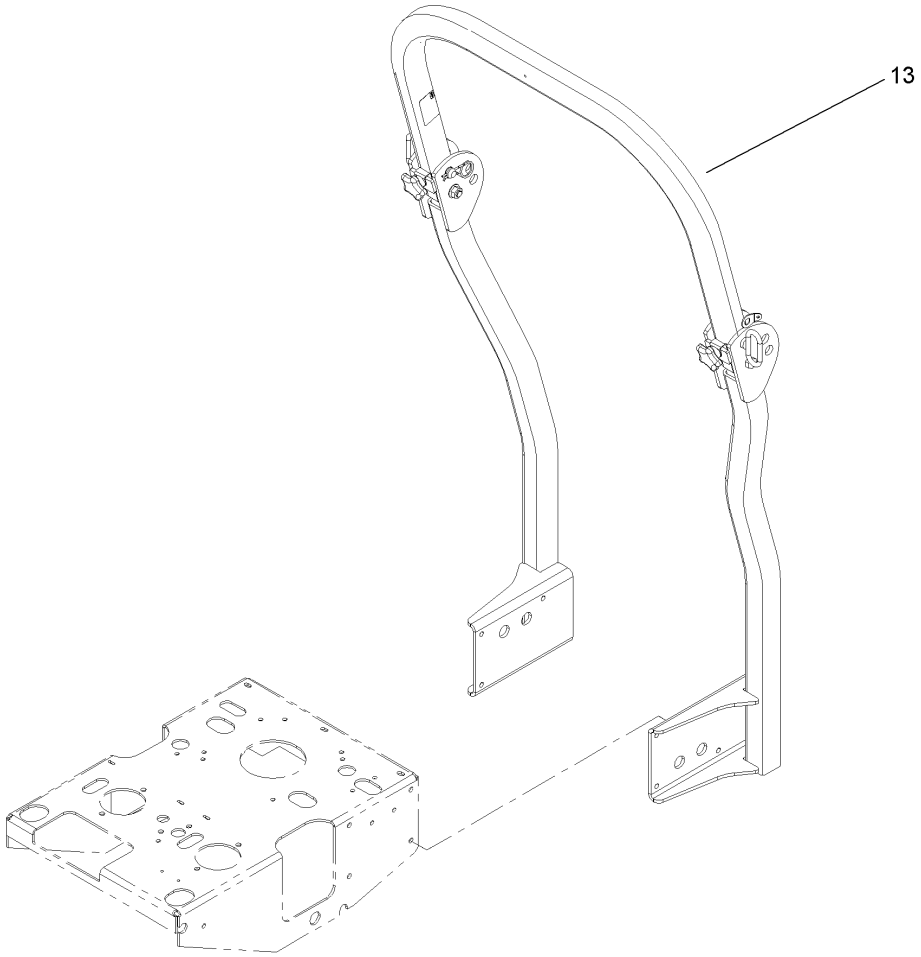
Seat and Bracket Assembly

Ref	Part No.	Qty.	Description
1	107-3052-03	1	Seat Support Frame ASM
2	323-39	2	Screw-HH
3	3296-29	3	Nut-Lock, NI
4	103-1731	1	Rod-Retainer, Seat
5	107-1867	1	Seat ASM
6	99-4693	1	Decal
7	2412-120	2	R-Clamp
8	104-7048	1	Cap-Housing
9	32104-76	2	Screw
10	104-7050	1	Housing-Manual
11	322-5	1	Screw-HH
12	103-5961	1	Catch-Latch, Seat
13	3296-39	3	Nut-Lock, NI
14	323-20	1	Screw-HH
15	107-0076	1	Spring-Torsion
16	107-0075	1	Bushing-Latch, Seat
17	107-3083	1	Latch ASM
18	62-9130	1	Grip-Handle
19	3256-24	1	Washer-Flat
20	322-4	2	Screw-HH



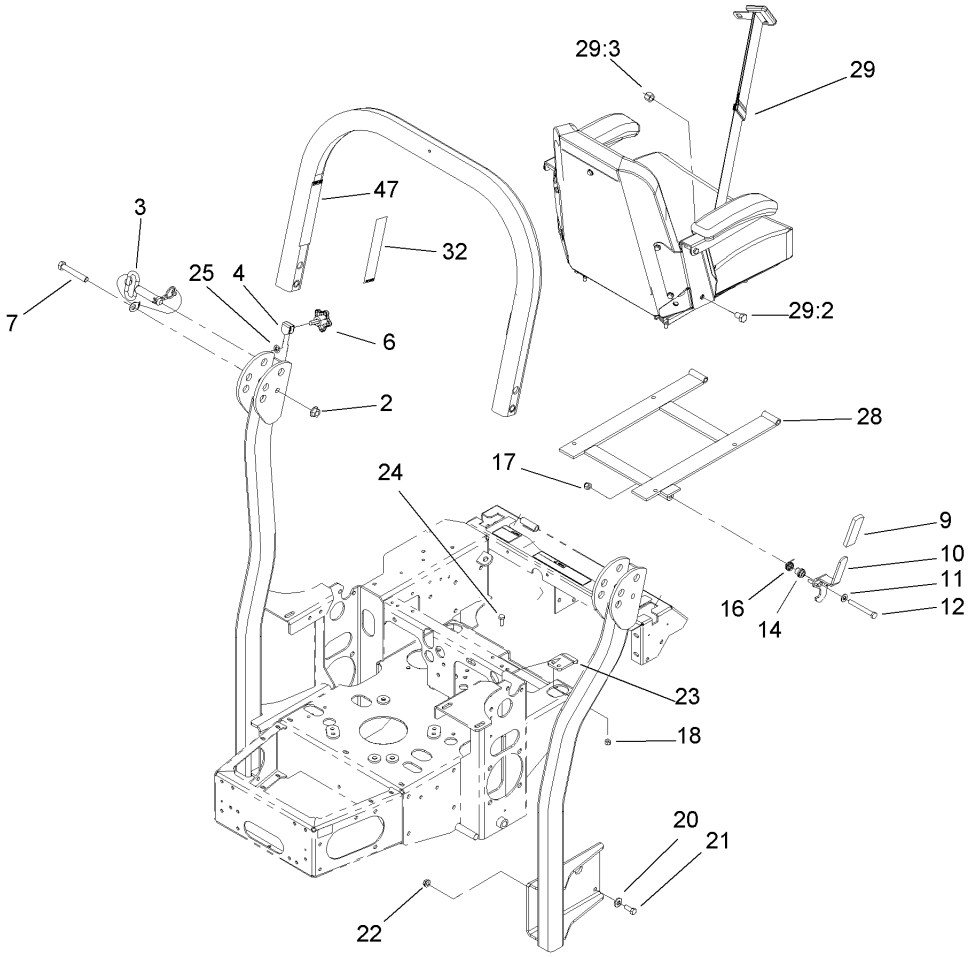
Seat Assembly No. 107-1867

Ref	Part No.	Qty.	Description
1	103-0290	1	Cushion-Seat, Bottom
2	104-7754	1	Cushion-Seat, Back
5	1-543401	4	Spacer-Track
6	1-643255	1	Track-Seat
7	1-633859	1	Frame-Seat
10	321-30	11	Screw-HH
11	32128-20	4	Nut-HF
17	3256-22	11	Washer-Flat
18	105-3620	1	Armrest Kit
18:1	1-633710	2	Cushion-Armrest
18:2	3256-22	4	Washer-Flat
18:3	322-10	2	Screw-HH
18:4	105-3623	2	Channel-Armrest
18:5	32153-3	2	Nut-Lock, Side
18:6	105-3621	1	Bracket-Armrest, RH
18:7	105-3622	1	Bracket-Armrest, LH
18:8	321-30	6	Screw-HH
18:9	3296-42	4	Nut-Lock, NI
18:10	325-2	2	Screw-HH
18:11	3296-23	2	Nut-Lock, NI
20	103-4469	1	Seatbelt Kit
20:2	3212-4	2	Screw-HH
20:3	3296-38	2	Nut-Lock NI



Roll-Over-Protection-System Assembly

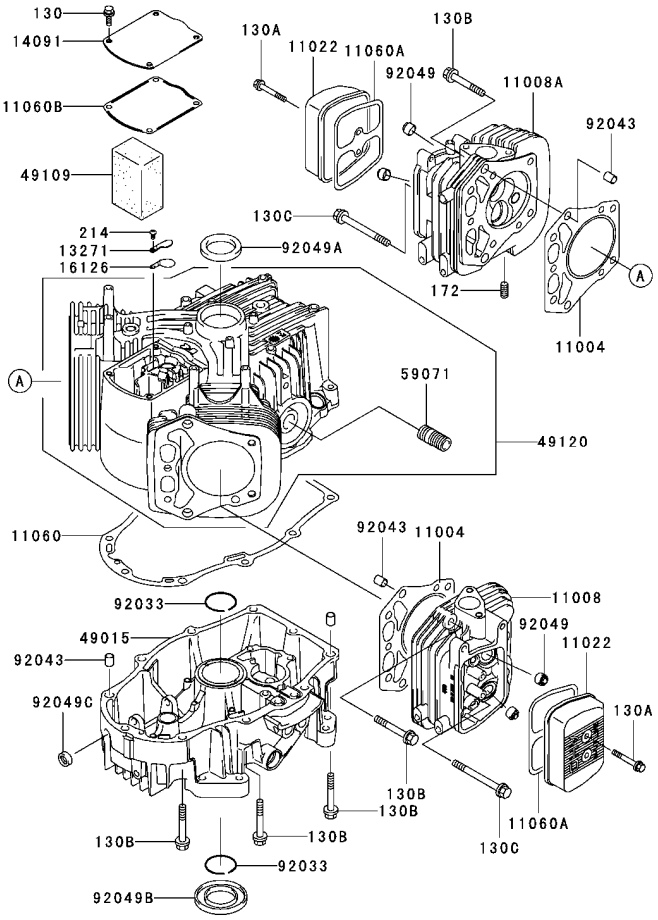
Ref	Part No.	Qty.	Description
13	107-8093	1	Rops ASM



Roll-Over-Protection-System Assembly No. 107-8093

Ref	Part No.	Qty.	Description
2	32128-23	2	Nut-HF
3	103-4553	2	Rops Fold Pin ASM
4	107-3124	2	Clip
6	106-0887	2	Knob
7	325-13	2	Screw-HH
9	62-9130	1	Grip-Handle
10	107-3083	1	Latch ASM
11	3256-24	1	Washer-Flat
12	323-20	1	Screw-HH
14	107-0075	1	Bushing-Latch, Seat
16	107-0076	1	Spring-Torsion
17	3296-39	1	Nut-Lock, NI
18	3296-29	2	Nut-Lock, NI
20	98-5975	8	Washer-Belleville
21	323-6	8	Screw-HH
22	3290-357	8	Nut-HHF
23	107-3059	1	Catch-Latch, Seat
24	322-4	2	Screw-HH
25	107-3154	2	Nut-Push
28	107-3052-03	1	Seat Support Frame ASM
29	103-4469	1	Seatbelt Kit
29:2	3212-4	2	Screw-HH
29:3	3296-38	2	Nut-Lock NI
32	107-3069	1	Decal-Warning, Folding Rops

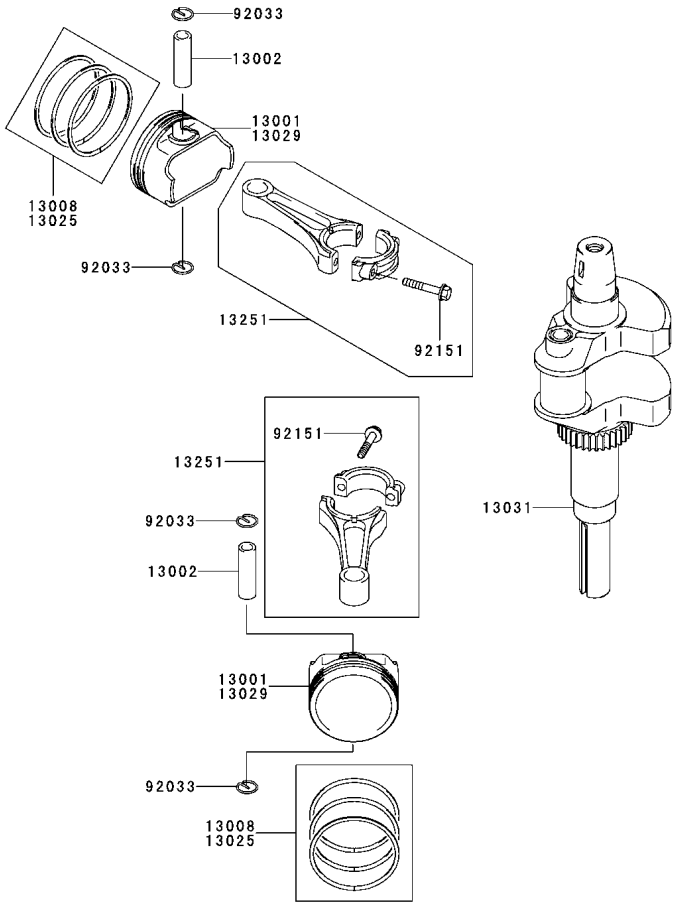
Ref	Part No.	Qty.	Description
47	107-2102	1	Decal-Warning, Folding Rops



Cylinder/Crankcase Assembly
Kawasaki FH680V-AS21

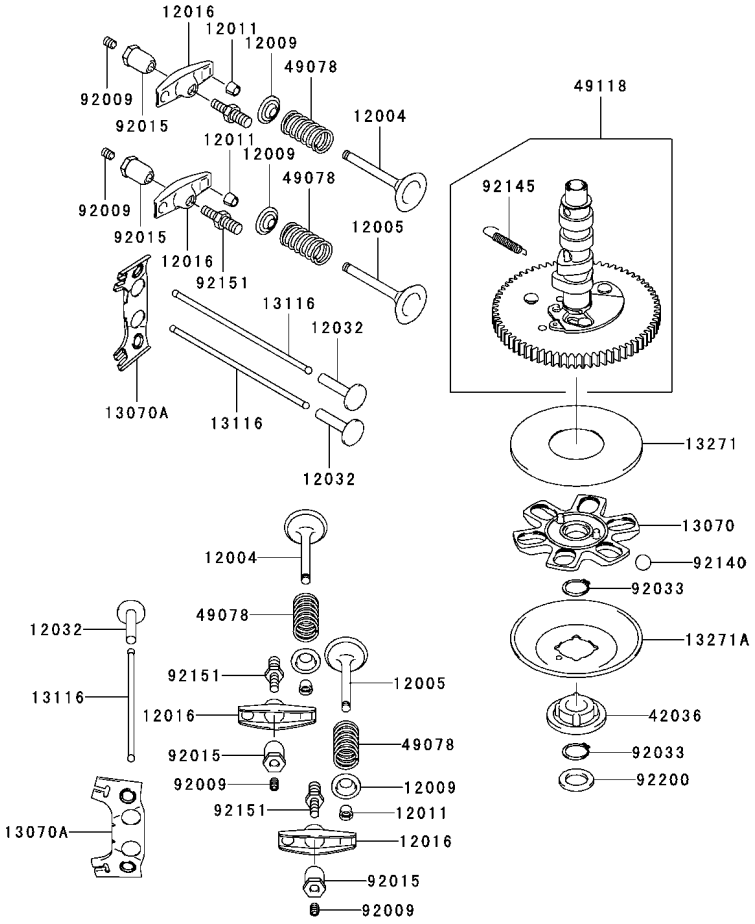
Ref	Part No.	Qty.	Description
❸11004	11004-7006	2	Gasket-Head
❸11008	11008-7012	1	Head-Comp-Cylinder No. 2
❸11008A	11008-7013	1	Head-Comp-Cylinder No. 1
❸11022	11022-7002	2	Case-Rocker
❸11060	11060-7012	1	Gasket, Crankcase Cover
❸11060A	11060-7013	2	Gasket, Rocker Case
❸11060B	11060-7014	1	Gasket, Breather
❸13271	13271-7006	1	Plate
❸14091	14091-7004	1	Cover
❸16126	16126-7001	1	Valve
❸49015	49015-6225	1	Cover-Crankcase
❸49109	49109-7003	1	Element-Breather
❸49120	49120-7019	1	Crankcase-Comp
❸59071	59071-2079	1	Joint
❸92033	92033-7004	2	Ring-Snap
❸92043	92043-7001	6	Pin
❸92049	92049-7001	4	Seal-Oil, Rvc2 (6x11x10.2)
❸92049A	92049-7002	1	Seal-Oil
❸92049B	92049-7004	1	Seal-Oil
❸92049C	92049-7005	1	Seal-Oil,so 8x14x5 HS
❸130	130B0612	4	Bolt-Flanged
❸130A	130B0640	4	Bolt-Flanged
❸130B	130T0850	18	Bolt-Flanged
❸130C	130T0875	2	Bolt-Flanged

Ref	Part No.	Qty.	Description
❸172	172G0818	4	Bolt-Stud
❸214	214B0408	1	Screw-Pan



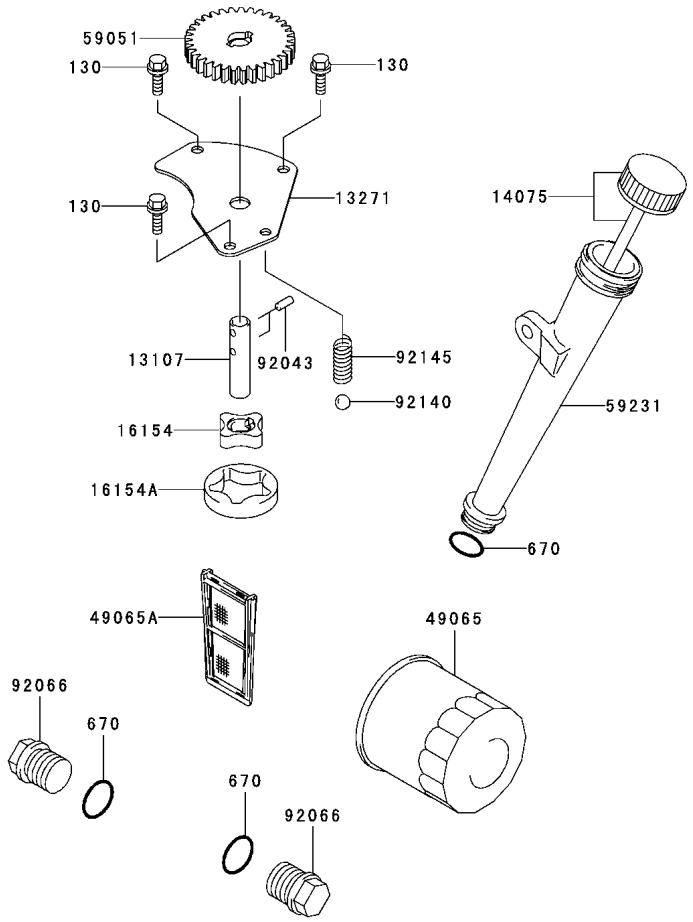
Piston/Crankshaft Assembly
Kawasaki FH680V-AS21

Ref	Part No.	Qty.	Description
❸13001	13001-7007	2	Piston-Engine
❸13002	13002-7001	2	Pin-Piston
❸13008	13008-6058	2	Ring-Set-Piston
❸13025	13025-7002	0	Ring-Set, Pistonl,0.50
❸13029	13029-7003	0	Piston-Engine L,0.50
❸13031	13031-7023	1	Crankshaft-Comp
❸13251	13251-7005	2	Connecting Rod ASM
❸92033	92033-7005	4	Ring-Snap
❸92151	92151-7017	4	Bolt (6x35)



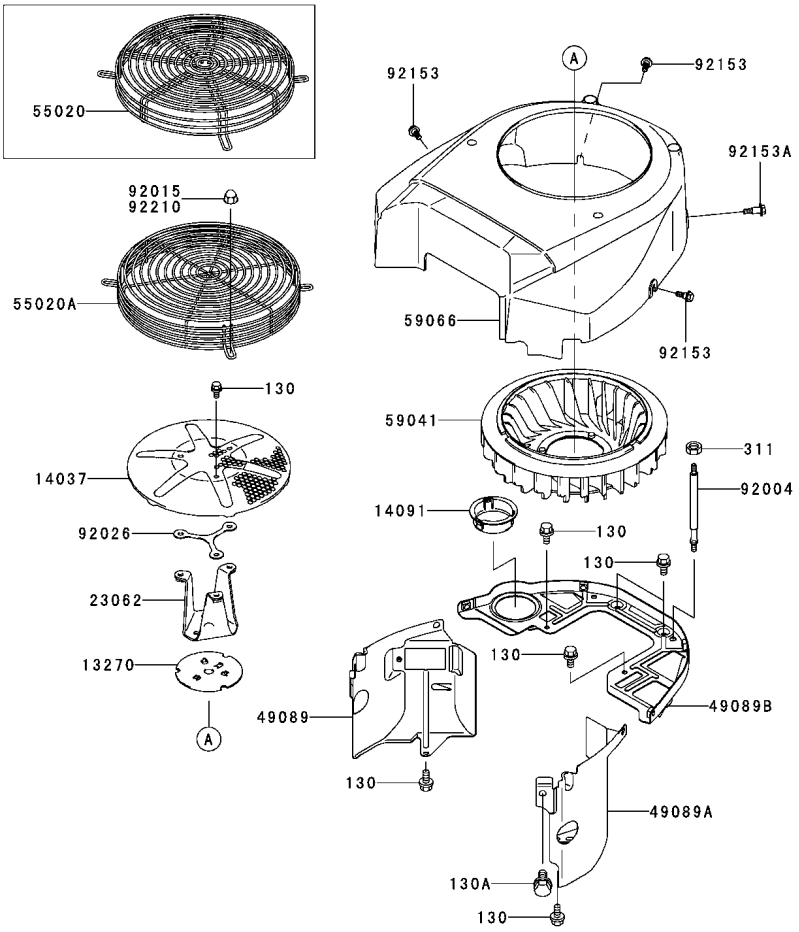
Valve/Camshaft Assembly
Kawasaki FH680V-AS21

Ref	Part No.	Qty.	Description
❸12004	12004-7002	2	Valve-Intake
❸12005	12005-7002	2	Valve-Exhaust
❸12009	12009-7001	4	Retainer-Spring, Valve
❸12011	12011-2056	8	Collet
❸12016	12016-7006	4	Arm-Rocker
❸12032	12032-7001	4	Tappet
❸13070	13070-7004	1	Guide
❸13070A	13070-7007	2	Guide
❸13116	13116-7002	4	Rod-Push
❸13271	13270-7007	1	Plate
❸13271A	13271-7021	1	Plate-Governor
❸42036	42036-7001	1	Sleeve
❸49078	49078-7002	4	Spring-Engine Valve
❸49118	49118-7007	1	Camshaft-Comp
❸92009	92009-2341	4	Screw
❸92015	92015-2253	4	Nut
❸92033	92033-7001	2	Ring-Snap
❸92140	92140-7002	6	Ball
❸92145	92145-7001	1	Spring
❸92151	92151-7019	4	Bolt
❸92200	92200-7001	1	Washer



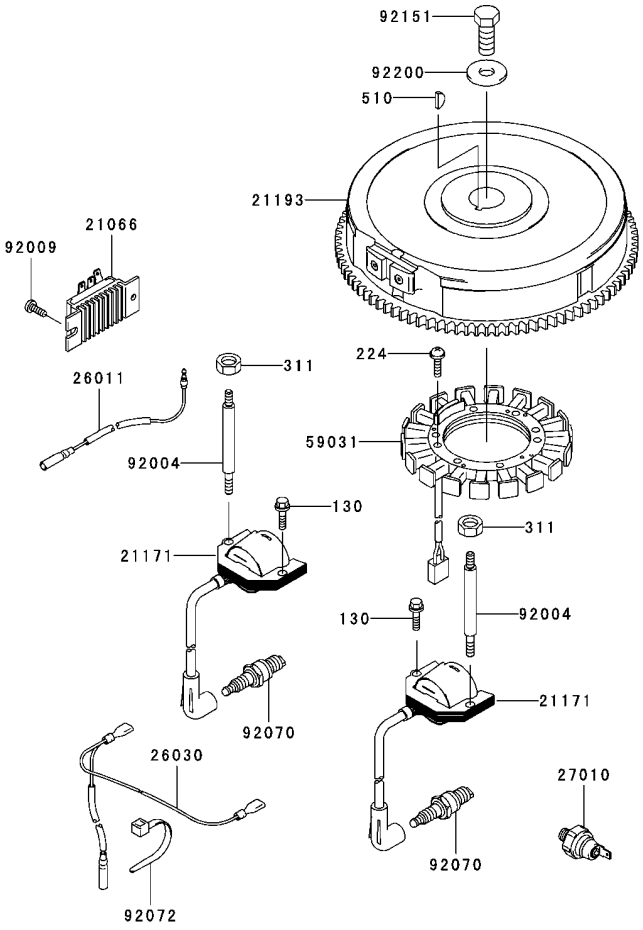
Lubrication Equipment Assembly
Kawasaki FH680V-AS21

Ref	Part No.	Qty.	Description
❸13107	13107-7009	1	Shaft
❸13271	13271-7005	1	Plate
❸14075	14075-7008	1	Cap-Assy
❸16154	16154-2053	1	Rotor-Pump (In)
❸16154A	16154-2054	1	Rotor-Pump (Out)
❸49065	49065-2078	1	Filter-Oil
❸49065A	49065-7003	1	Filter-Oil
❸59051	59051-7011	1	Gear-Spur
❸59231	59231-7002	1	Filler
❸92043	92043-7006	2	Pin
❸92066	92066-7003	2	Plug
❸92140	92140-7003	1	Ball
❸92145	92145-7002	1	Spring
❸130	130B0612	3	Bolt-Flanged
❸670	670D2016	3	O-Ring (16mm)



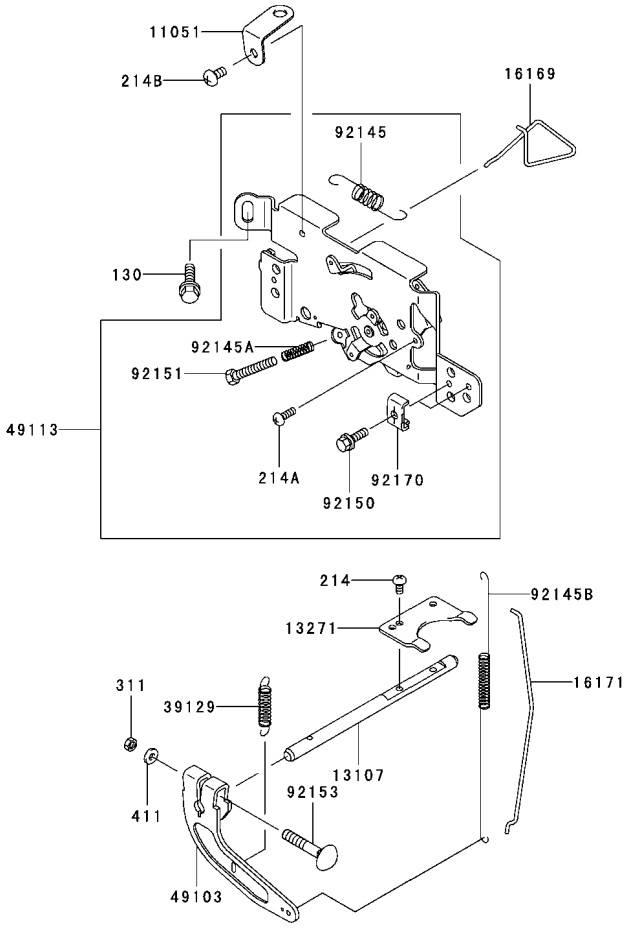
Cooling Equipment Assembly
Kawasaki FH680V-AS21

Ref	Part No.	Qty.	Description
❸13270	13270-7007	1	Plate
❸14037	14037-7008-9H	1	Screen
❸14091	14091-7002	1	Cover
❸23062	23062-7005	1	Bracket-Comp
❸49089	49089-7004	1	Shroud-Engine
❸49089A	49089-7005	1	Shroud-Engine
❸49089B	49089-7030	1	Shroud-Engine
❸55020	55020-7002	1	Guard
❸55020A	55020-7007	1	Guard
❸59041	59041-7003	1	Fan
❸59066	59066-7004	1	Housing-Fan
❸92004	92004-7006	2	Stud
❸92015	92015-1170	4	Nut
❸92026	92026-7007	0	Spacer
❸92153	92153-7007	3	Bolt
❸92153A	92153-7008	1	Bolt
❸92210	92210-0003	4	Nut
❸130	130B0612	9	Bolt-Flanged
❸130A	130B0816	1	Bolt-Flanged
❸311	311B0600	2	Nut-Hex



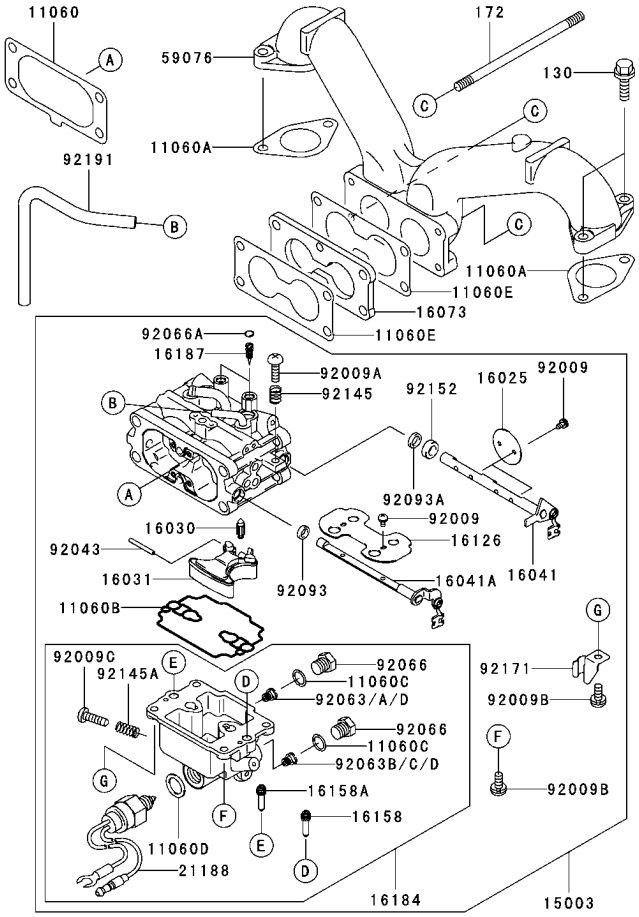
Electric Equipment Assembly
Kawasaki FH680V-AS21

Ref	Part No.	Qty.	Description
❸21066	21066-7006	1	Regulator-Voltage
❸21171	21171-7007	2	Coil-ASM-Ignition
❸21193	21193-7019	1	Flywheel-Assy
❸26011	26011-7008	1	Wire-Lead
❸26030	26030-7002	1	Harness
❸27010	27010-7001	1	Switch
❸59031	59031-7001	1	Coil-Charging
❸92004	92004-7009	2	Stud
❸92009	92009-2308	1	Screw
❸92070	92070-7004	2	Plug-spark,bpr4es(Ngk), Solid
❸92072	92072-7003	2	Band
❸92151	92151-2097	1	Bolt (12x30)
❸92200	92200-7002	1	Washer
❸130	130B0620	2	Bolt-Flanged
❸224	224B0520	4	Screw-Pan
❸311	311B0600	2	Nut-Hex
❸510	510A5100	1	Key-Woodruff



Control Equipment Assembly
Kawasaki FH680V-AS21

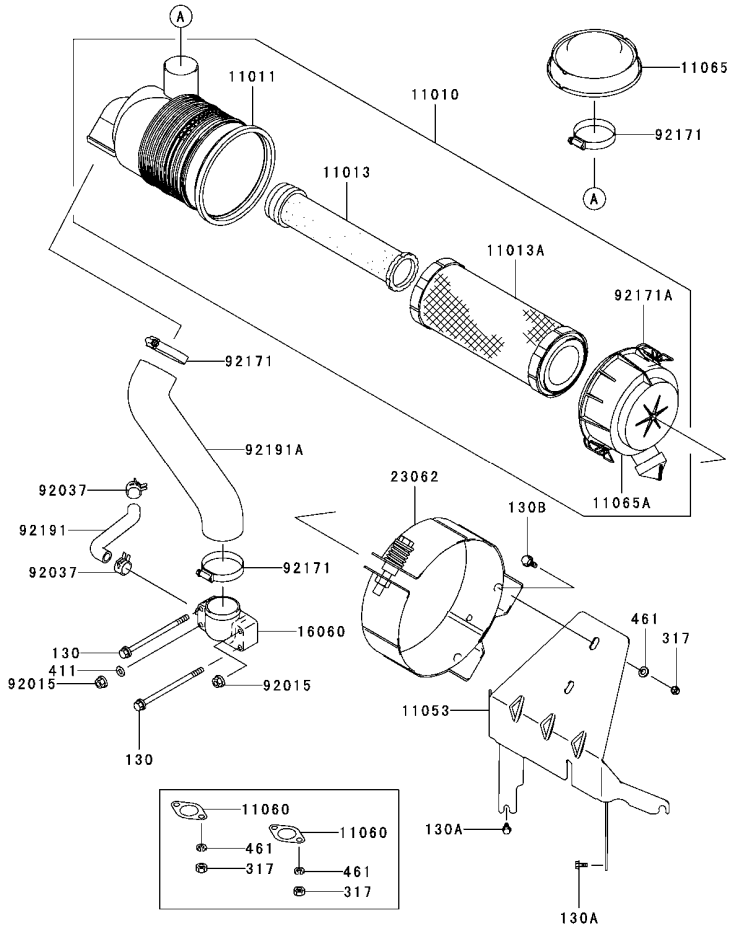
Ref	Part No.	Qty.	Description
❸11051	11051-7008	1	Bracket
❸13107	13107-7013	1	Shaft
❸13271	13271-7018	1	Plate
❸16169	16169-7006	1	Link-Choke
❸16171	16171-7004	1	Link
❸39129	39129-7004	1	Spring-Governor
❸49103	49103-7004	1	Arm-Governor
❸49113	49113-7017	1	Panel-Comp-Control
❸92145	92145-7004	1	Spring
❸92145A	92145-7005	1	Spring
❸92145B	92145-7009	1	Spring
❸92150	92150-2182	2	Bolt (5x18)
❸92151	92151-7014	1	Bolt, 5x30
❸92153	92153-7005	1	Bolt,6x35
❸92170	92170-7001	2	Clamp
❸130	130B0612	2	Bolt-Flanged
❸214	214B0408	2	Screw-Pan
❸214A	214B0412	1	Screw-Pan
❸214B	214B0510	1	Screw-Pan
❸311	311B0600	1	Nut-Hex
❸411	411b0600	1	Washer-Plain



Carburetor Assembly
Kawasaki FH680V-AS21

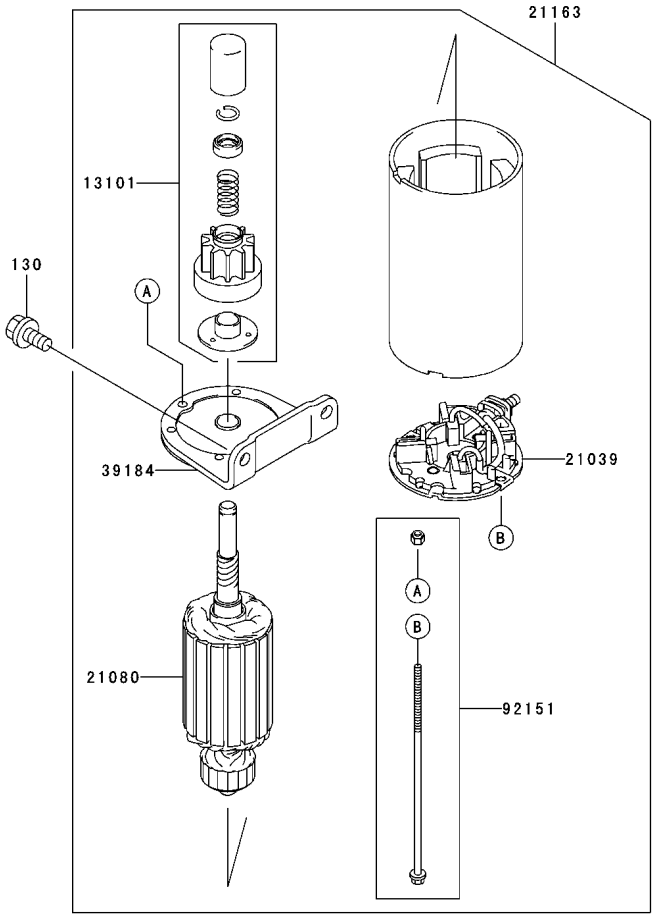
Ref	Part No.	Qty.	Description
❸11060	11060-7009	1	Gasket, Air Filter
❸11060A	11060-7011	2	Gasket
❸11060B	11060-7018	1	Gasket, Float Chamber
❸11060C	11060-7019	2	Gasket, Main Plug
❸11060D	11060-7020	1	Gasket, Solenoid
❸11060E	11060-7024	2	Gasket-Carburetor
❸15003	15003-7073	1	Carburetor-Assy
❸16025	16025-7003	2	Valve-Throttle
❸16030	16030-7002	1	Valve-Float
❸16031	16031-7001	1	Float
❸16041	16041-7004	1	Shaft-Carburetor Throttle
❸16041A	16041-7007	1	Shaft-Carburetor, Choke
❸16073	16073-7005	1	Insulator
❸16126	16126-7004	1	Valve, Choke
❸16158	16158-7007	1	Jet-Slow, No.56
❸16158A	16158-7008	1	Jet-Slow, No.42
❸16184	16184-7010	1	Chamber-Assy-Float
❸16187	16187-7002	2	Needle-Jet
❸21188	21188-7001	1	Solenoid
❸59076	59076-7002	1	Manifold-Intake
❸92009	92009-7003	6	Screw
❸92009A	92009-7004	1	Screw
❸92009B	92009-7005	4	Screw
❸92009C	92009-7006	1	Screw, Drain

Ref	Part No.	Qty.	Description
❸92043	92043-7004	1	Pin-Float
❸92063	92063-7017	1	Jet-Main, No.133
❸92063A	92063-7018	1	Jet-Main, No.130
❸92063B	92063-7019	1	Jet-Main, No.139
❸92063C	92063-7020	1	Jet-Main, No.134
❸92063D	92063-7038	2	Jet-Main, No.114
❸92066	92066-7008	2	Plug, Main Jet
❸92066A	92066-7009	2	Plug, Extension
❸92093	92093-7001	1	Seal
❸92093A	92093-7002	1	Seal
❸92145	92145-7010	1	Spring
❸92145A	92145-7011	1	Spring
❸92152	92152-7001	1	Collar
❸92171	92171-7001	1	Clamp
❸92191	92191-7023	1	Tube
❸130	130B0620	4	Bolt-Flanged
❸172	172G06105	2	Bolt-Stud



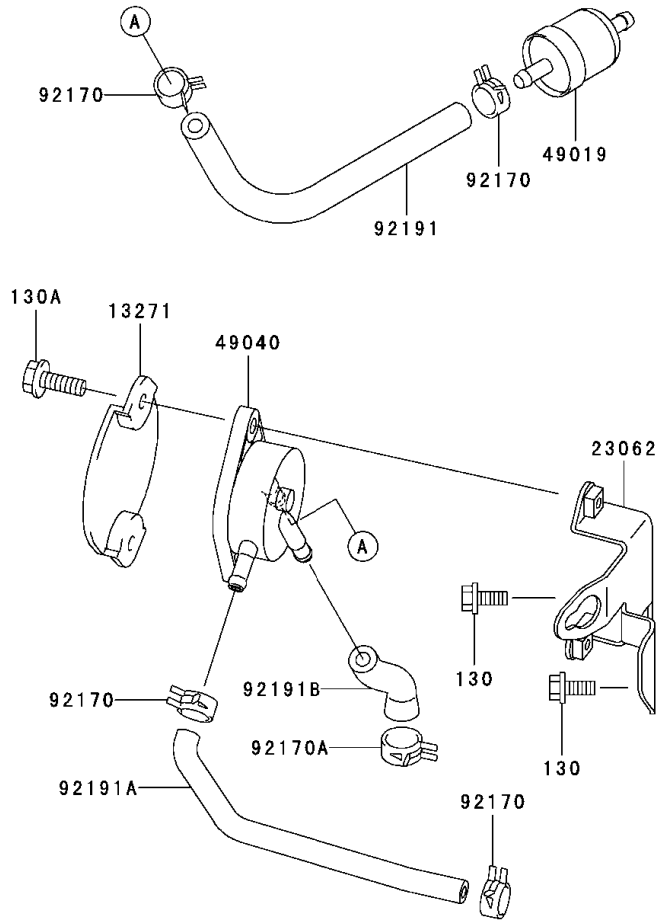
Air Filter and Muffler Assembly
Kawasaki FH680V-AS21

Ref	Part No.	Qty.	Description
❸11010	11010-7004	1	Filter-Assy-Air
❸11011	11011-7014	1	Case-Air Filter
❸11013	11013-7019	1	Element-Air Filter
❸11013A	11013-7020	1	Element-Air Filter
❸11060	11060-7016	2	Gasket, Muffler
❸11065	11065-7006	1	Cap
❸11065A	11065-7008	1	Cap
❸16060	16060-7005	1	Pipe-Intake
❸92015	92015-1193	2	Nut
❸92037	92037-2079	2	Clamp
❸92171	92171-7007	3	Clamp
❸92171A	92171-7009	2	Clamp
❸92191	92191-7006	1	Tube
❸92191A	92191-7028	1	Tube
❸130	130B06105	2	Bolt-Flanged
❸130A	130B0612	2	Bolt-Flanged
❸130B	130B0816	2	Bolt-Flanged
❸317	317R0800	6	Nut-Hex, Small
❸411	411b0600	1	Washer-Plain
❸461	461F0800	6	Washer-Spring



Starter Assembly Kawasaki FH680V-AS21

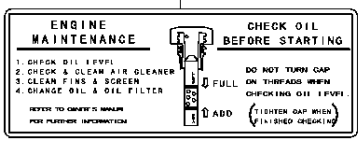
Ref	Part No.	Qty.	Description
❸13101	13101-7001	1	Gear ASM
❸21039	21039-7001	1	Brush
❸21080	21080-7001	1	Armature
❸21163	21163-7001	1	Starter-Electric
❸39184	39184-7001	1	Bracket ASM
❸92151	92151-7013	1	Bolt
❸130	130B0816	2	Bolt-Flanged



Fuel Tank/Fuel Valve Assembly
Kawasaki FH680V-AS21

Ref	Part No.	Qty.	Description
❸13271	13271-7004	1	Plate
❸23062	23062-7004-9H	1	Bracket-Comp
❸49019	49019-7001	1	Filter-Fuel
❸49040	49040-7001	1	Pump-Fuel
❸92170	92170-2088	4	Clamp
❸92170A	92170-7003	1	Clamp
❸92191	92191-7003	1	Tube (6.35x12.7x160)
❸92191A	92191-7017	1	Tube
❸92191B	92191-7027	1	Tube
❸130	130B0616	2	Bolt-Flanged
❸130A	130B0620	2	Bolt-Flanged

56033



56080



Decal Assembly
Kawasaki FH680V-AS21

Ref	Part No.	Qty.	Description
❸56033	56033-7002	1	Label-Manual
❸56080	56080-7009	1	Decal-Brand

NOTES


TORO®