Form Number 3352-895

# Z453 Z Master®

## With 48in TURBO FORCE Side Discharge Mower

**Model No. 74417 - 250000001 and up.**

# Parts Catalog

**Ordering Replacement Parts**

To order replacement parts, please supply the part number, the quantity, and the description of each part desired.

**Understanding Reference Numbers**

Each Identified part in an illustration has a reference number. The reference number for a part also appears in the parts list, along with other information about the part.

This catalog uses two special reference number formats, one to indicate parts in a service assembly and another to indicate the quantity of a given part in an illustration.

**Service Assembly Reference Numbers**

Parts in service assemblies have reference numbers in the form a:b. The a represents the reference number of the entire service assembly and the b represents a sequential number unique to each part within the service assembly.

For example, a wheel assembly might be identified by reference number 6, the tire by 6:1, the valve by 6:2, and the wheel by 6:3. When you order the assembly identified by reference number 6, you receive all parts identified by reference numbers 6:1, 6:2, and 6:3. However, you may also order any part individually. Reference numbers of this type appear in illustrations and in part lists.

**Reference Numbers Indicating Quantity**

In an illustration, if a reference number indicates more than one part, the reference number has the form nX y. The n represents the quantity of the part, the X is the multiplication symbol, and the y represents the reference number.

For example, in an illustration, the reference number 2X 37 means that two of the parts identified by reference number 37 are indicated.

©The Toro Company - 2004
All Rights Reserved

Register your product at www.Toro.com

# Contents


| Description | Page |
|---|---|
| Front Frame Assembly | 3 |
| Caster Wheel Assembly No. 1-634662 | 4 |
| Height of Cut Assembly | 5 |
| Main Frame Assembly | 6 |
| Fuel System Assembly | 7 |
| Parking Brake Assembly | 8 |
| Motion Control Assembly | 9 |
| Hydraulic System Assembly | 10 |
| Hydraulic Pump Assembly No. 103-1942 | 12 |
| Pump Idler and Belt Assembly | 13 |
| Engine, Clutch and Muffler Assembly | 14 |
| Deck Connection Assembly | 15 |
| Deck Assembly No. 107-3190 | 16 |
| Deck Decal Assembly No. 107-8515 | 18 |
| Spindle Assembly No. 107-8504 | 19 |
| Rubber Deflector Assembly No. 108-4060 | 20 |
| Idler Assembly | 21 |
| Electrical System Assembly | 22 |
| Seat and Bracket Assembly | 23 |
| Seat Assembly No. 107-1867 | 24 |
| Roll-Over-Protection-System Assembly | 25 |
| Roll-Over-Protection-System Assembly No. 107-8093 | 26 |
| Cylinder/Crankcase Assembly Kawasaki FH680V-AS21 | 27 |
| Piston/Crankshaft Assembly Kawasaki FH680V-AS21 | 28 |
| Valve/Camshaft Assembly Kawasaki FH680V-AS21 | 29 |
| Lubrication Equipment Assembly Kawasaki FH680V-AS21 | 30 |
| Cooling Equipment Assembly Kawasaki FH680V-AS21 | 31 |
| Electric Equipment Assembly Kawasaki FH680V-AS21 | 32 |
| Control Equipment Assembly Kawasaki FH680V-AS21 | 33 |
| Carburetor Assembly Kawasaki FH680V-AS21 | 34 |
| Air Filter and Muffler Assembly Kawasaki FH680V-AS21 | 35 |
| Starter Assembly Kawasaki FH680V-AS21 | 36 |
| Fuel Tank/Fuel Valve Assembly Kawasaki FH680V-AS21 | 37 |
| Decal Assembly Kawasaki FH680V-AS21 | 38 |

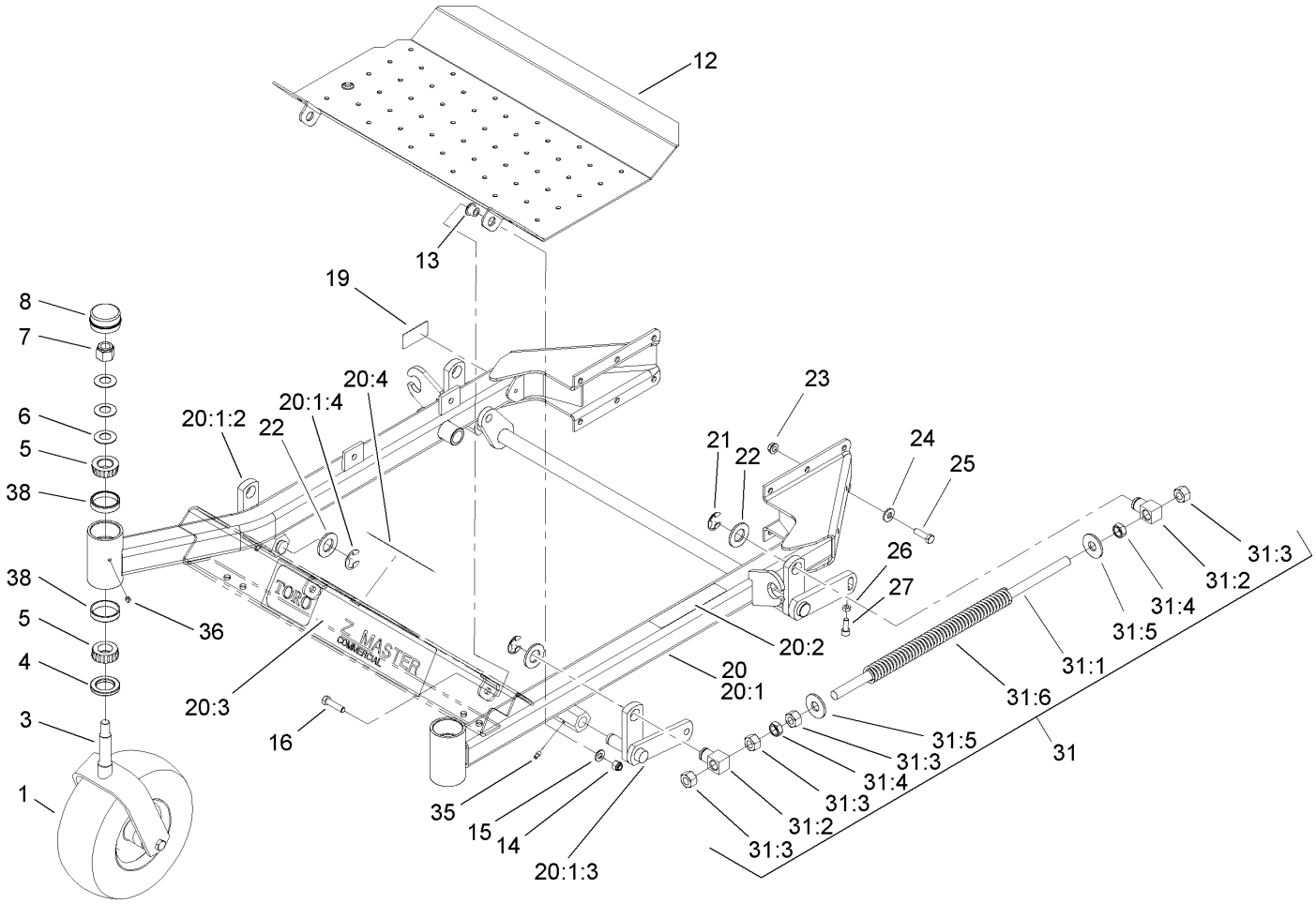

# Part Description Abbreviations

Part descriptions in this catalog may include the following abbreviations.

AR. . . . . as required
ASM. . . . . assembly
CARR. . . . . carriage
DEG. . . . . degrees
FH. . . . . flat head
GA. . . . . gauge
HF. . . . . hex flange
HH. . . . . hex head
HHF. . . . . hex head flange
HHFTF. . . . . hex head flange thread forming
HJ. . . . . hex jam
HLH. . . . . hex lag head
HOC. . . . . height-of-cut
HS. . . . . hex
HSBH. . . . . hex socket button head
HSFH. . . . . hex socket flat head
HSH. . . . . hex socket head
HWH. . . . . hex washer head
HWHTF. . . . . hex washer head thread forming
HYD. . . . . hydraulic
INC. . . . . incorporated
LH. . . . . left hand
NI. . . . . nylon insert
PPH. . . . . phillips pan head
PTH. . . . . phillips truss head
PTO. . . . . power take off
RH. . . . . right hand
SFH. . . . . slotted fillister head
SHH. . . . . slotted hex head
SHWH. . . . . slotted hex washer head
SPH. . . . . slotted pan head
SQH. . . . . square head
SRH. . . . . slotted round head
STD. . . . . standard
TAP. . . . . self tapping
TTH. . . . . torx truss head
WH. . . . . wing head

# Footnotes

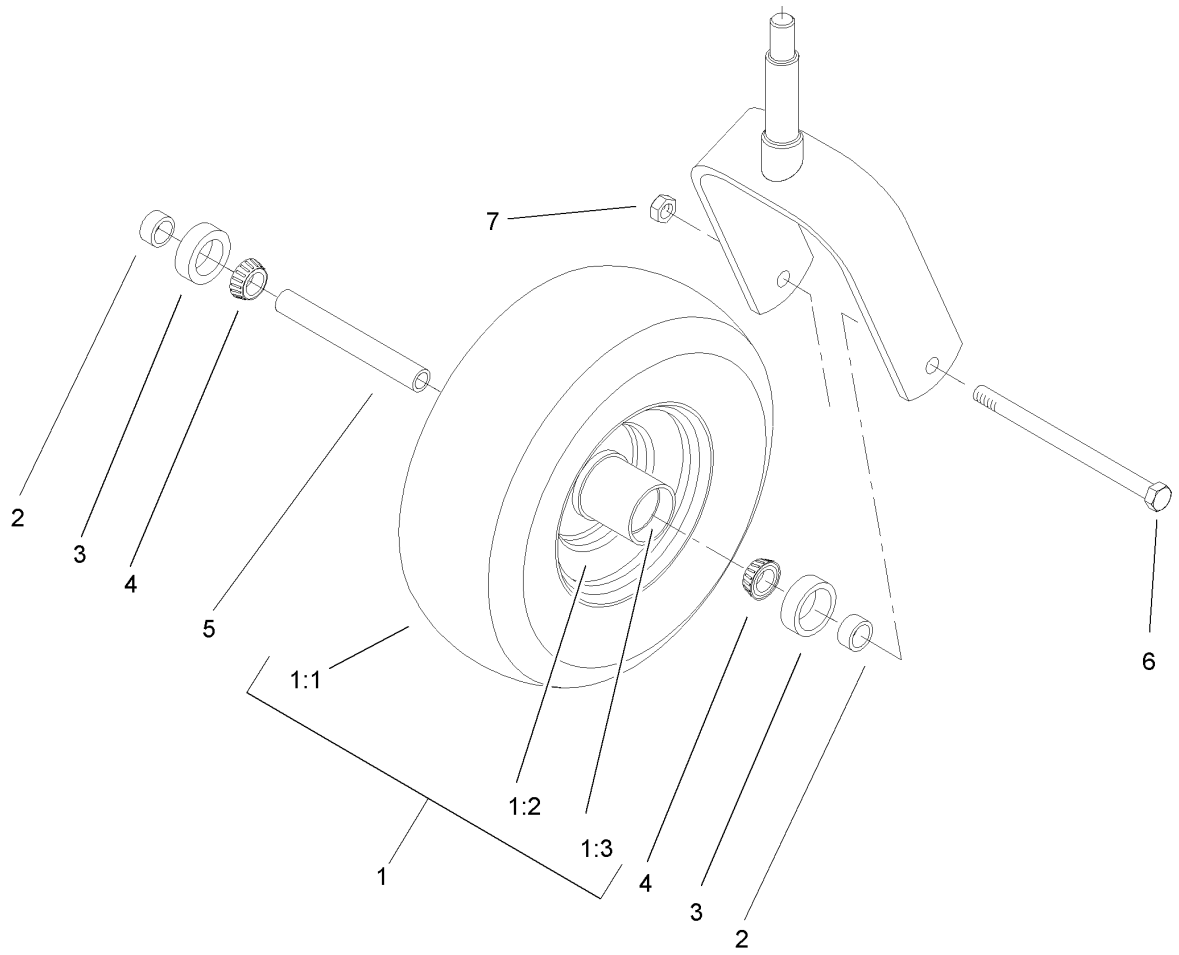
❶ Not illustrated
❷ Not serviced separately
❸ Obtain Parts From Kawasaki




# Front Frame Assembly

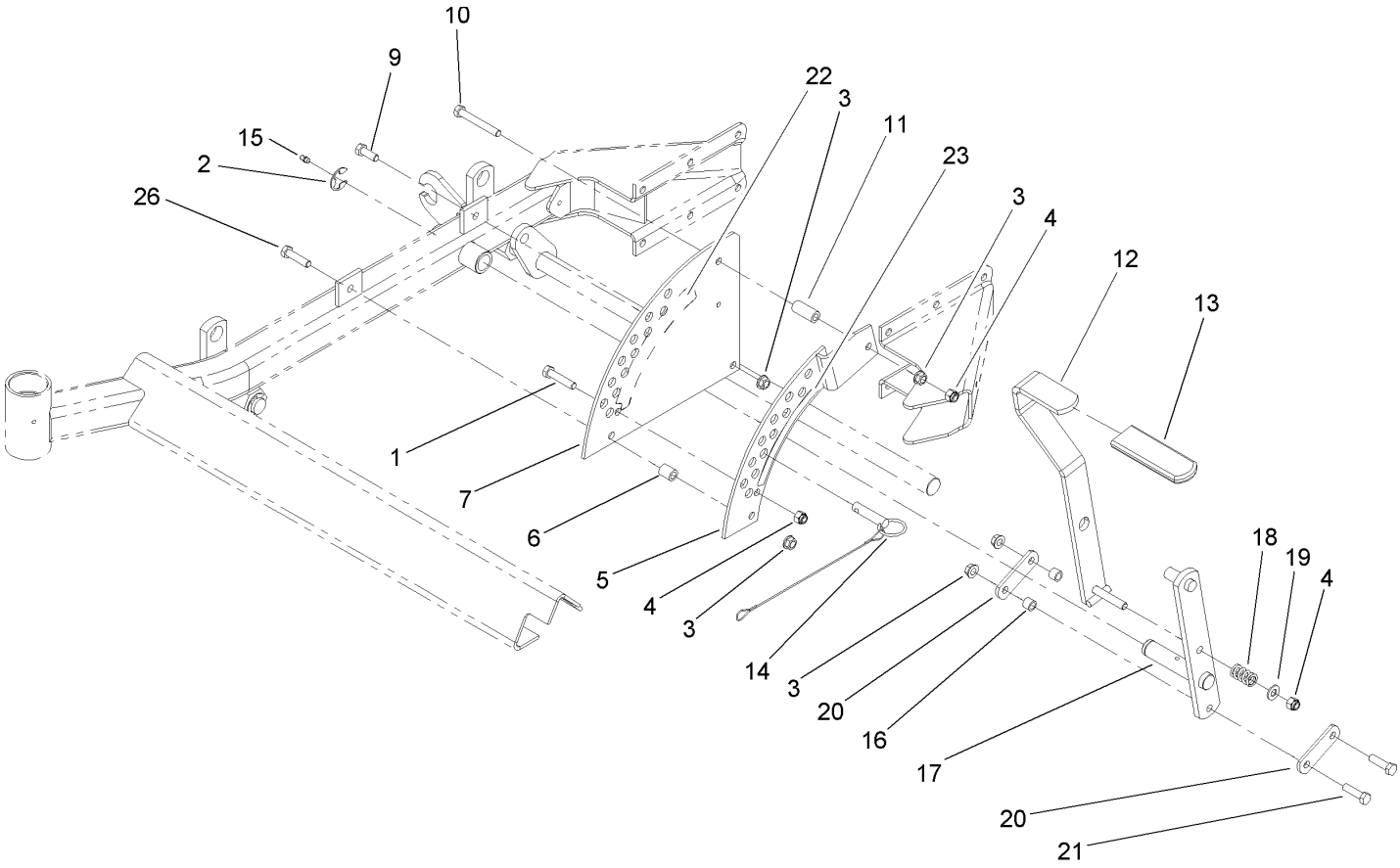
| Ref | Part No. | Qty. | Description |
|---|---|---|---|
| 1 | 1-634662 | 2 | Caster Wheel ASM |
| 3 | 1-632511-01 | 2 | Caster |
| 4 | 1-543511 | 2 | Seal-Grease |
| 5 | 254-94 | 4 | Bearing-Cone, Tapered |
| 6 | 1-633508 | 6 | Washer-Bellville |
| 7 | 3296-51 | 2 | Nut-Lock, NI |
| 8 | 1-543513 | 2 | Cap-Grease |
| 12 | 108-5007-03 | 1 | Floor Pan |
| 13 | 86-2180 | 2 | Bushing-Flange |
| 14 | 3296-39 | 2 | Nut-Lock, NI |
| 15 | 3256-24 | 2 | Washer-Flat |
| 16 | 323-8 | 2 | Screw-HH |
| 19 | 105-2625 | 1 | Decal-Std, Safety |
| 20 | 107-1650 | 1 | Front Frame ASM |
| ❷20:1 | | 1 | Frame-Front |
| 20:1:2 | 99-3872-01 | 1 | RH Lift Arm ASM |
| 20:1:3 | 99-3871-01 | 1 | LH Lift Arm ASM |
| 20:1:4 | 32151-103 | 2 | Ring-Snap |
| 20:2 | 1-633818 | 1 | Decal-Warning |
| 20:3 | 106-7451 | 1 | Decal |
| 20:4 | 107-2112 | 1 | Decal-Warning |
| 21 | 32151-103 | 4 | Ring-Snap |
| 22 | 3256-29 | 6 | Washer-Flat |
| 23 | 3290-357 | 12 | Nut-HHF |

| Ref | Part No. | Qty. | Description |
|---|---|---|---|
| 24 | 98-5975 | 12 | Washer-Belleville |
| 25 | 323-7 | 12 | Screw-HH |
| 26 | 3218-2 | 2 | Nut-Jam |
| 27 | 3274-18 | 2 | Screw-HSH |
| 31 | 1-634439 | 2 | Front Frame Spring ASM |
| 31:1 | 1-633096 | 1 | Rod-Lift, Deck |
| 31:2 | 1-633441 | 2 | Swivel-Deck Mount, Rear |
| 31:3 | 3217-11 | 4 | Nut-Hex |
| 31:4 | 3218-6 | 2 | Nut-Jam |
| 31:5 | 3256-7 | 2 | Washer-Flat |
| 31:6 | 1-633064 | 1 | Spring-Support, Deck |
| 35 | 302-19 | 4 | Fitting-Grease |
| 36 | 1-811010 | 2 | Plug |
| 38 | 254-72 | 4 | Bearing-Cup, Tapered |



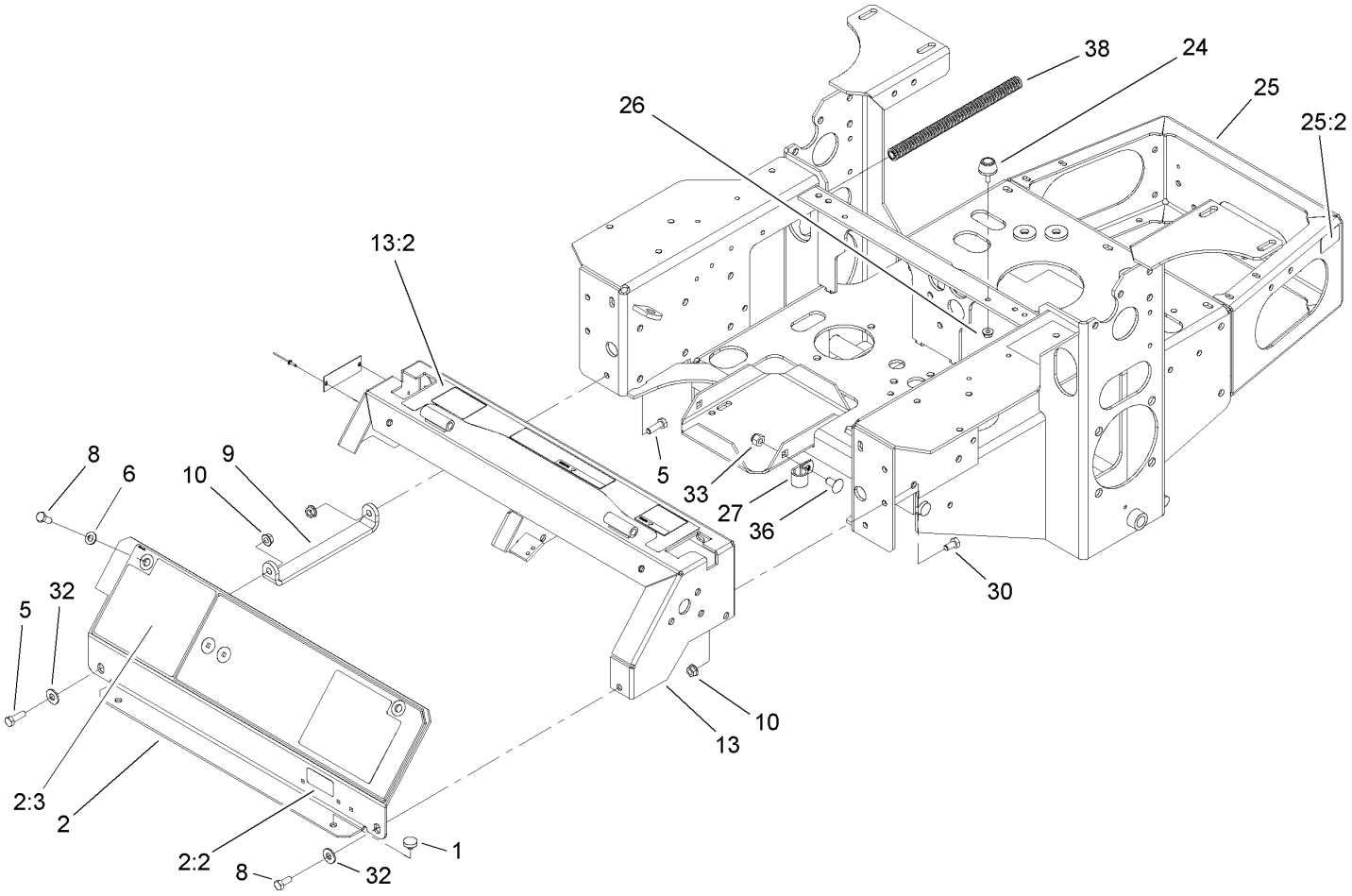

# Caster Wheel Assembly No. 1-634662

| Ref | Part No. | Qty. | Description |
|---|---|---|---|
| 1 | 1-633582 | 1 | Wheel And Tire ASM |
| 1:1 | 1-633002 | 1 | Tire |
| 1:2 | 1-633583 | 1 | Wheel |
| 1:3 | 1-633584 | 2 | Bearing-Cup |
| 2 | 1-633581 | 2 | Spacer-Bearing |
| 3 | 1-633580 | 2 | Seal-Bearing |
| 4 | 1-633585 | 2 | Bearing-Cone, Taper |
| 5 | 1-633579 | 1 | Spacer-Caster, Front |
| 6 | 325-36 | 1 | Screw-HH |
| 7 | 3296-45 | 1 | Nut-Lock, NI |



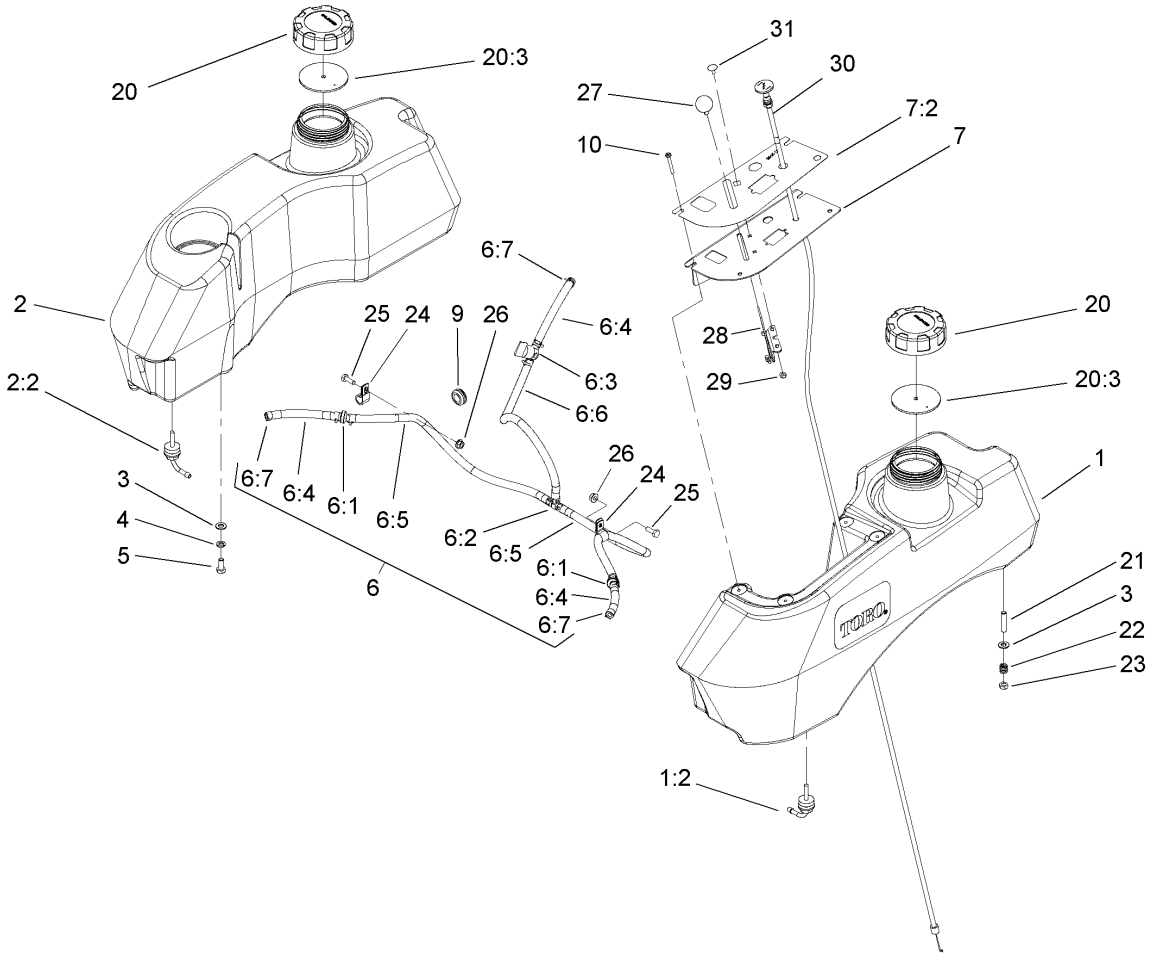

# Height of Cut Assembly

| Ref | Part No. | Qty. | Description |
|---|---|---|---|
| 1 | 323-9 | 1 | Screw-HH |
| 2 | 32151-103 | 1 | Ring-Snap |
| 3 | 3290-357 | 5 | Nut-HHF |
| 4 | 3296-39 | 3 | Nut-Lock, NI |
| 5 | 1-652235-01 | 1 | Plate-Lift, Deck |
| 6 | 1-633080 | 1 | Bushing-Lever, Lift |
| 7 | 1-653230-01 | 1 | Plate-Lift, Deck |
| 9 | 323-6 | 1 | Screw-HH |
| 10 | 323-13 | 1 | Screw-HH |
| 11 | 1-633082 | 1 | Bushing-Lever, Lift |
| 12 | 103-2078-03 | 1 | Handle-Lift |
| 13 | 1-633295 | 1 | Grip-Lever, Lift |
| 14 | 106-9951 | 1 | Hitch Pin ASM |
| 15 | 302-19 | 1 | Fitting-Grease |
| 16 | 103-1918 | 2 | Bushing |
| 17 | 106-6598-03 | 1 | Lift Arm ASM |
| 18 | 1-633325 | 1 | Spring-Compression |
| 19 | 3256-24 | 1 | Washer-Flat |
| 20 | 1-633068 | 2 | Arm-Lift, Deck |
| 21 | 323-29 | 2 | Screw-HH |
| 22 | 108-1051 | 1 | Decal-Deck Height, Outer |
| 23 | 108-1050 | 1 | Decal-Deck Height, Inner |
| 26 | 323-8 | 1 | Screw-HH |




# Main Frame Assembly

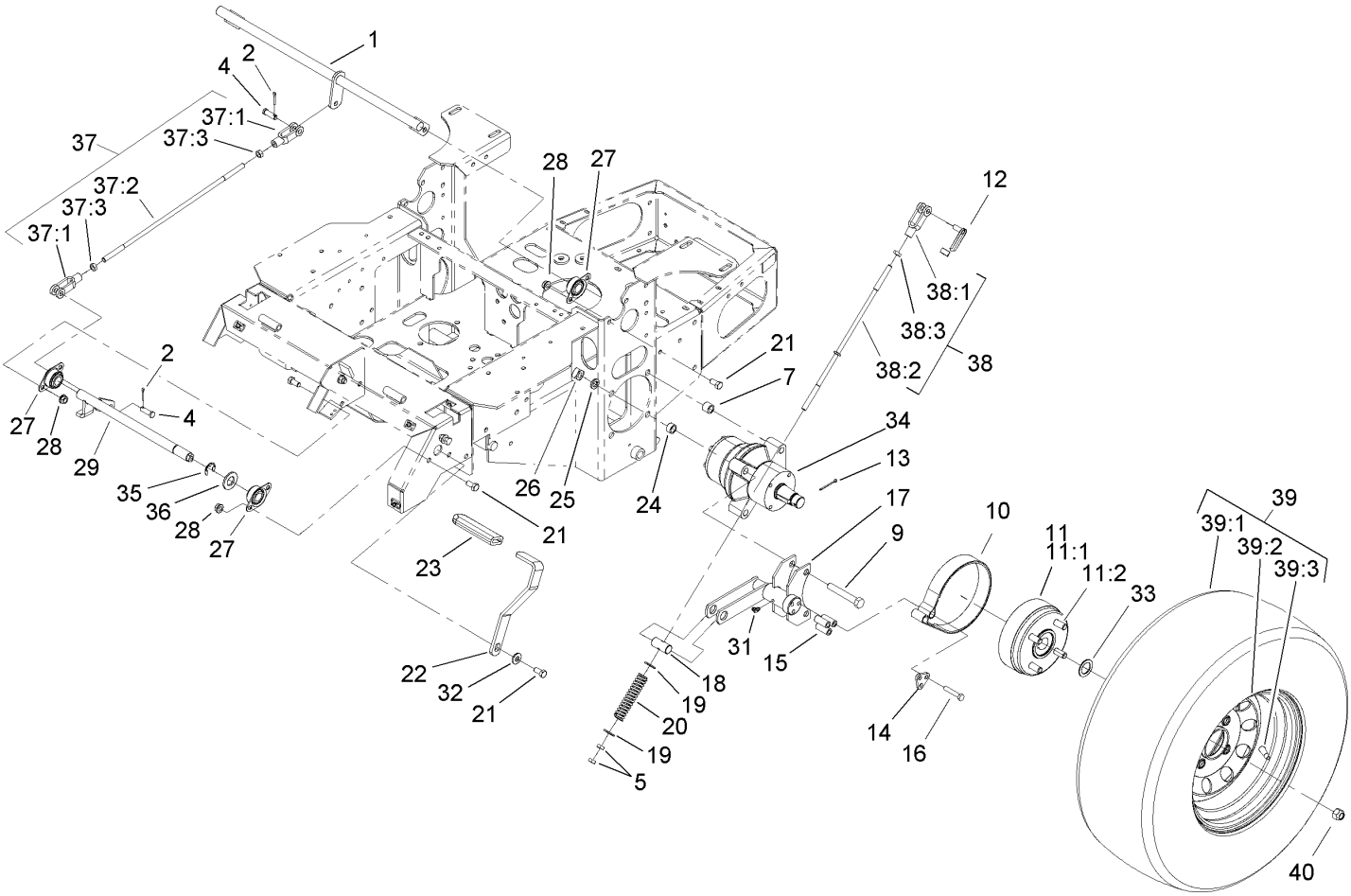
| Ref | Part No. | Qty. | Description |
|---|---|---|---|
| 1 | 1-513658 | 2 | Bumper |
| 2 | 108-1864 | 1 | Panel ASM |
| 2:2 | 98-4387 | 1 | Decal-Protection, Ear |
| 2:3 | 107-8445 | 1 | Decal-Cover, Panel |
| 5 | 322-5 | 2 | Screw-HH |
| 6 | 3256-23 | 2 | Washer-Flat |
| 8 | 322-3 | 3 | Screw-HH |
| 9 | 1-653089-03 | 1 | Bracket |
| 10 | 32128-20 | 6 | Nut-HF |
| 13 | 108-5997 | 1 | Console Asm, Z400 (W/ Decals) |
| 13:2 | 108-5995 | 1 | Decal, Top Console Z400 |
| 24 | 1-523420 | 2 | Bumper |
| 25 | 108-2783 | 1 | Main Frame ASM |
| 25:2 | 65-2690 | 2 | Decal-Surface, Hot |
| 26 | 32128-33 | 2 | Nut-HF |
| 27 | 1-633396 | 1 | Clip-Loom |
| 30 | 322-2 | 4 | Screw-HH |
| 32 | 3256-3 | 2 | Washer-Flat |
| 33 | 3296-39 | 1 | Nut-Lock, NI |
| 36 | 3231-21 | 1 | Screw-CARR |
| 38 | 24-7922 | 2 | Cover-Shaft, Drive |




# Fuel System Assembly

| Ref | Part No. | Qty. | Description |
|---|---|---|---|
| 1 | 107-2146 | 1 | LH Fuel Tank ASM |
| 1:2 | 103-2605 | 1 | Fitting-Fuel, Bulkhead |
| 2 | 106-9975 | 1 | RH Fuel Tank ASM |
| 2:2 | 103-2605 | 1 | Fitting-Fuel, Bulkhead |
| 3 | 3256-23 | 8 | Washer-Flat |
| 4 | 1-805005 | 4 | Washer-Lock |
| 5 | 322-3 | 4 | Screw-HH |
| ❷6 | | 1 | Fuel Line ASM |
| 6:1 | 99-5000 | 2 | Valve-Check, Fuel |
| 6:2 | 99-5005 | 1 | Fitting-Tee, Barbed |
| 6:3 | 1-603770 | 1 | Valve-Fuel |
| 6:4 | 99-7190 | 3 | Hose-Fuel |
| 6:5 | 99-3185 | 2 | Hose-Fuel |
| 6:6 | 106-8720 | 1 | Hose-Fuel |
| 6:7 | 1-303077 | 12 | Clamp |
| 7 | 107-2149 | 1 | Control Panel ASM |
| 7:2 | 107-2148 | 1 | Decal-Panel, Control |
| 9 | 1-543296 | 2 | Grommet |
| 10 | 32122-30 | 4 | Screw-Pth |
| 20 | 88-3980 | 2 | Gas Cap ASM |
| 20:3 | 88-4010 | 1 | Gasket-Cap, Gas |
| 21 | 1-633023 | 4 | Stud |
| 22 | 1-633349 | 4 | Spring-Tank, Fuel |
| 23 | 3296-47 | 4 | Nut-Lock, NI |

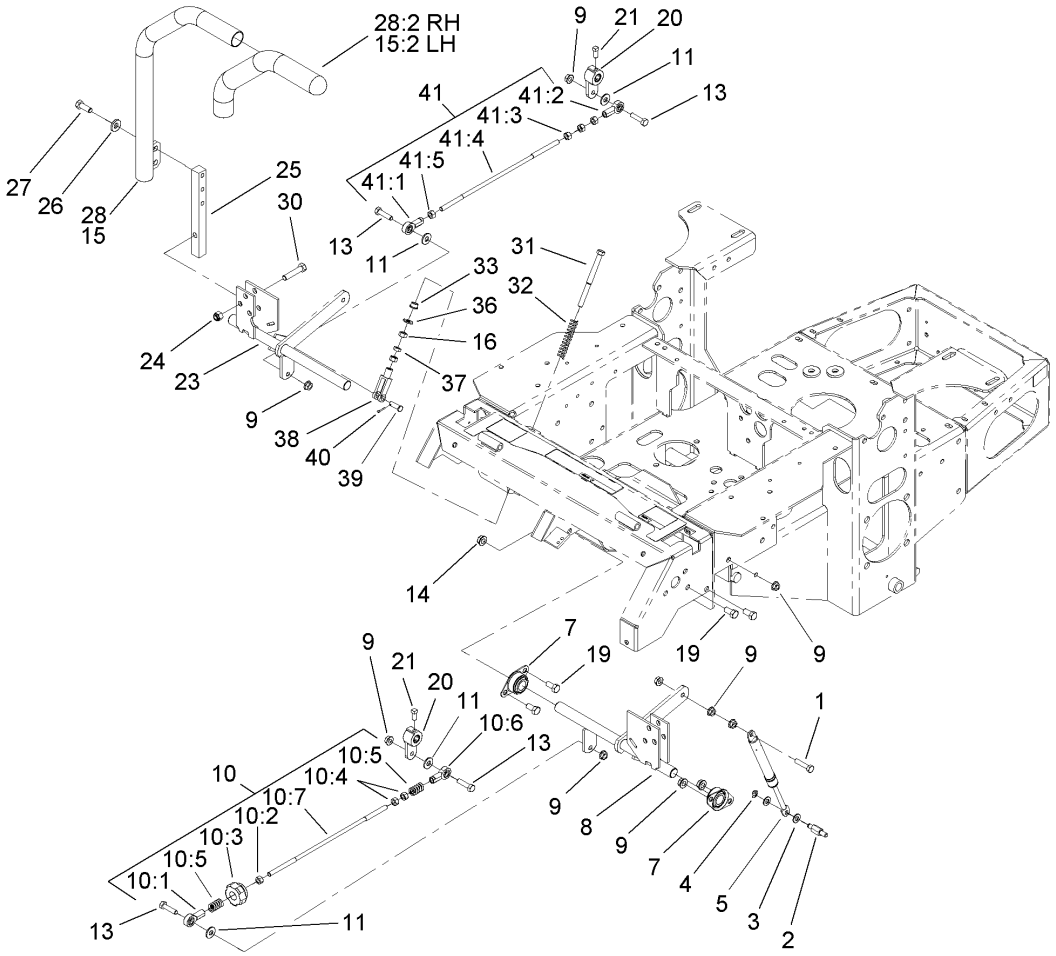
| Ref | Part No. | Qty. | Description |
|---|---|---|---|
| 24 | 1-513762 | 2 | Clip-Loom |
| 25 | 321-4 | 2 | Screw-HH |
| 26 | 32128-33 | 2 | Nut-HF |
| 27 | 1-513592 | 1 | Knob-Ball |
| 28 | 1-633696 | 1 | Throttle Cable ASM |
| 29 | 3296-2 | 2 | Nut-Lock |
| 30 | 1-603336 | 1 | Control-Choke |
| 31 | 1-807513 | 2 | Bolt-CARR |




# Parking Brake Assembly

| Ref | Part No. | Qty. | Description |
|---|---|---|---|
| 1 | 1-652073-03 | 1 | Crank-Brake, Park |
| 2 | 3272-10 | 2 | Pin-Cotter |
| 4 | 1-808285 | 2 | Pin-Clevis |
| 5 | 3219-3 | 4 | Nut-Hex |
| 7 | 1-653068 | 4 | Spacer-Wheel |
| 9 | 325-13 | 8 | Screw-HH |
| 10 | 103-0355 | 2 | Band-Brake |
| ❷11 | | 2 | Hub And Wheel ASM |
| 11:1 | 103-0589 | 1 | Wheel Hub ASM |
| 11:2 | 1-633926 | 4 | Stud-Wheel |
| 12 | 103-2399 | 2 | Pin-Spring, Clevis |
| 13 | 1-806800 | 2 | Pin-Cotter |
| 14 | 103-0374 | 2 | Retainer-Band, Brake |
| 15 | 103-0384 | 6 | Spacer |
| 16 | 322-9 | 6 | Screw-HH |
| 17 | 103-0352-03 | 2 | Bracket-Brake |
| 18 | 1-633144 | 2 | Pin-Trunion |
| 19 | 3256-4 | 4 | Washer-Flat |
| 20 | 1-633454 | 2 | Spring-Brake |
| 21 | 323-4 | 9 | Screw-HH |
| 22 | 1-653074-03 | 1 | Handle-Brake, Park |
| 23 | 1-633268 | 1 | Grip-Lever, Brake |
| 24 | 1-653069 | 4 | Spacer-Wheel |
| 25 | 3253-7 | 8 | Washer-Lock |

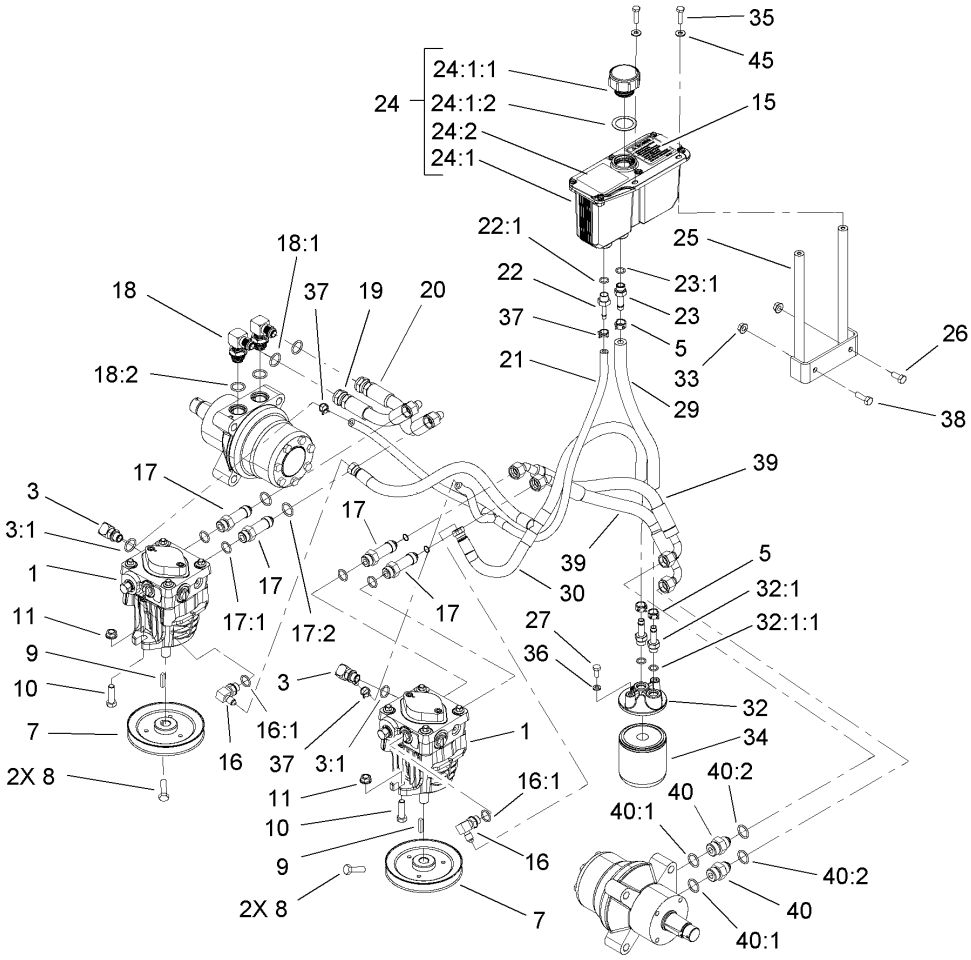
| Ref | Part No. | Qty. | Description |
|---|---|---|---|
| 26 | 103-0131 | 8 | Nut-Square |
| 27 | 1-633102 | 4 | Bearing-Flange, Side |
| 28 | 3290-357 | 8 | Nut-HHF |
| 29 | 103-3116 | 1 | Shaft-Brake, Parking |
| 31 | 1481 | 2 | Fitting-Grease |
| 32 | 98-5975 | 1 | Washer-Belleville |
| 33 | 1-523157 | 2 | Washer-Spacer |
| 34 | 103-5333 | 2 | Motor-Wheel |
| 35 | 32151-48 | 1 | E-Ring |
| 36 | 3256-28 | 1 | Washer-Flat |
| 37 | 103-4328 | 1 | Brake Rod ASM |
| 37:1 | 1-633131 | 2 | Yoke-Linkage, Brake |
| 37:2 | 1-653061 | 1 | Linkage-Handle, Brake |
| 37:3 | 3219-3 | 2 | Nut-Hex |
| 38 | 103-4329 | 2 | Brake Rod ASM |
| 38:1 | 1-633131 | 1 | Yoke-Linkage, Brake |
| 38:2 | 103-0356 | 1 | Rod-Brake |
| 38:3 | 3219-3 | 1 | Nut-Hex |
| 39 | 1-653159 | 2 | Wheel And Tire ASM |
| 39:1 | 1-653160 | 1 | Tire |
| 39:2 | 1-653161 | 1 | Wheel |
| 39:3 | 232-27 | 1 | Stem-Valve |
| 40 | 242-50 | 8 | Nut-Lug |




# Motion Control Assembly

| Ref | Part No. | Qty. | Description |
|---|---|---|---|
| 1 | 1-403180 | 2 | Screw-HH |
| 2 | 103-4101 | 2 | Pin-Damper |
| 3 | 3256-23 | 4 | Washer-Flat |
| 4 | 32120-35 | 2 | E-Ring |
| 5 | 103-4079 | 2 | Damper-Control, Motion |
| 7 | 1-633102 | 4 | Bearing-Flange, Side |
| 8 | 103-4774 | 1 | Control-Motion, LH |
| 9 | 32128-20 | 12 | Nut-HF |
| 10 | 103-4326 | 1 | Tracking Rod ASM |
| 10:1 | 1-543017 | 1 | Balljoint-RH |
| 10:2 | 3219-2 | 1 | Nut-Hex |
| 10:3 | 103-3060 | 1 | Knob-Tracking |
| 10:4 | 1-804524 | 2 | Nut |
| 10:5 | 1-323245 | 2 | Spring-Compression |
| 10:6 | 1-633152 | 1 | Balljoint-Thread, LH |
| 10:7 | 103-3066 | 1 | Link-Rod, Tracking |
| 11 | 3256-3 | 4 | Washer-Flat |
| 13 | 322-6 | 4 | Screw-HH |
| 14 | 3290-357 | 6 | Nut-HHF |
| 15 | 106-9982 | 1 | LH Lever ASM |
| 15:2 | 106-9987 | 1 | Grip-Control, Motion |
| 16 | 3219-2 | 4 | Nut-Hex |
| 19 | 323-4 | 6 | Screw-HH |
| 20 | 103-3717 | 2 | Arm-Control |

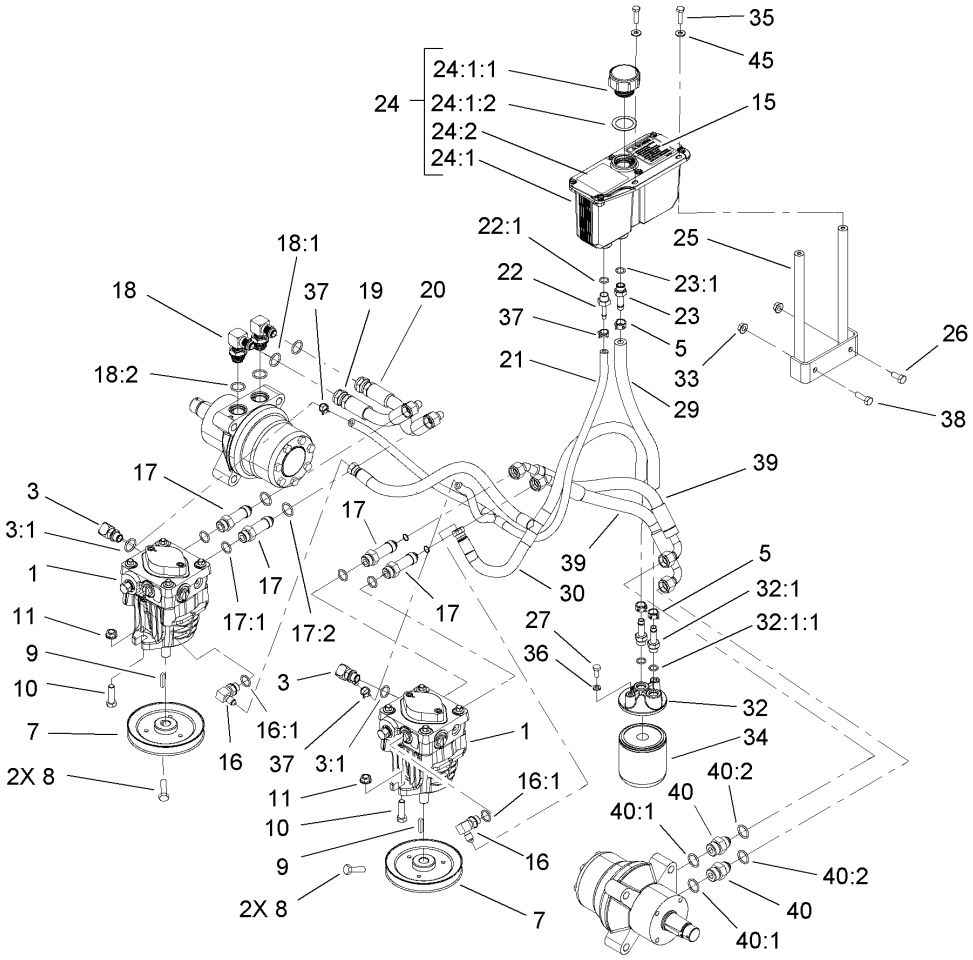
| Ref | Part No. | Qty. | Description |
|---|---|---|---|
| 21 | 1-803022 | 2 | Screw-Set |
| 23 | 103-4773 | 1 | Control-Motion, RH |
| 24 | 3296-39 | 6 | Nut-Lock, NI |
| 25 | 103-0407 | 2 | Arm-Shaft, Control |
| 26 | 98-5975 | 4 | Washer-Belleville |
| 27 | 323-6 | 4 | Screw-HH |
| 28 | 106-9983 | 1 | RH Lever ASM |
| 28:2 | 106-9987 | 1 | Grip-Control, Motion |
| 30 | 323-9 | 6 | Screw-HH |
| 31 | 1-603737 | 2 | Bolt-Return, Neutral |
| 32 | 1-603807 | 2 | Spring-Return, Neutral |
| 33 | 1-603735 | 2 | Bushing-Flanged |
| 36 | 3256-2 | 2 | Washer-Flat |
| 37 | 3220-2 | 2 | Nut-Jam |
| 38 | 1-303105 | 2 | Yoke-Adjustable |
| 39 | 1-808280 | 2 | Pin-Clevis |
| 40 | 3272-5 | 2 | Pin-Cotter |
| 41 | 103-4327 | 1 | Tracking ASM |
| 41:1 | 1-543017 | 1 | Balljoint-RH |
| 41:2 | 1-633152 | 1 | Balljoint-Thread, LH |
| 41:3 | 1-804524 | 1 | Nut |
| 41:4 | 103-3066 | 1 | Link-Rod, Tracking |
| 41:5 | 3219-2 | 3 | Nut-Hex |




# Hydraulic System Assembly

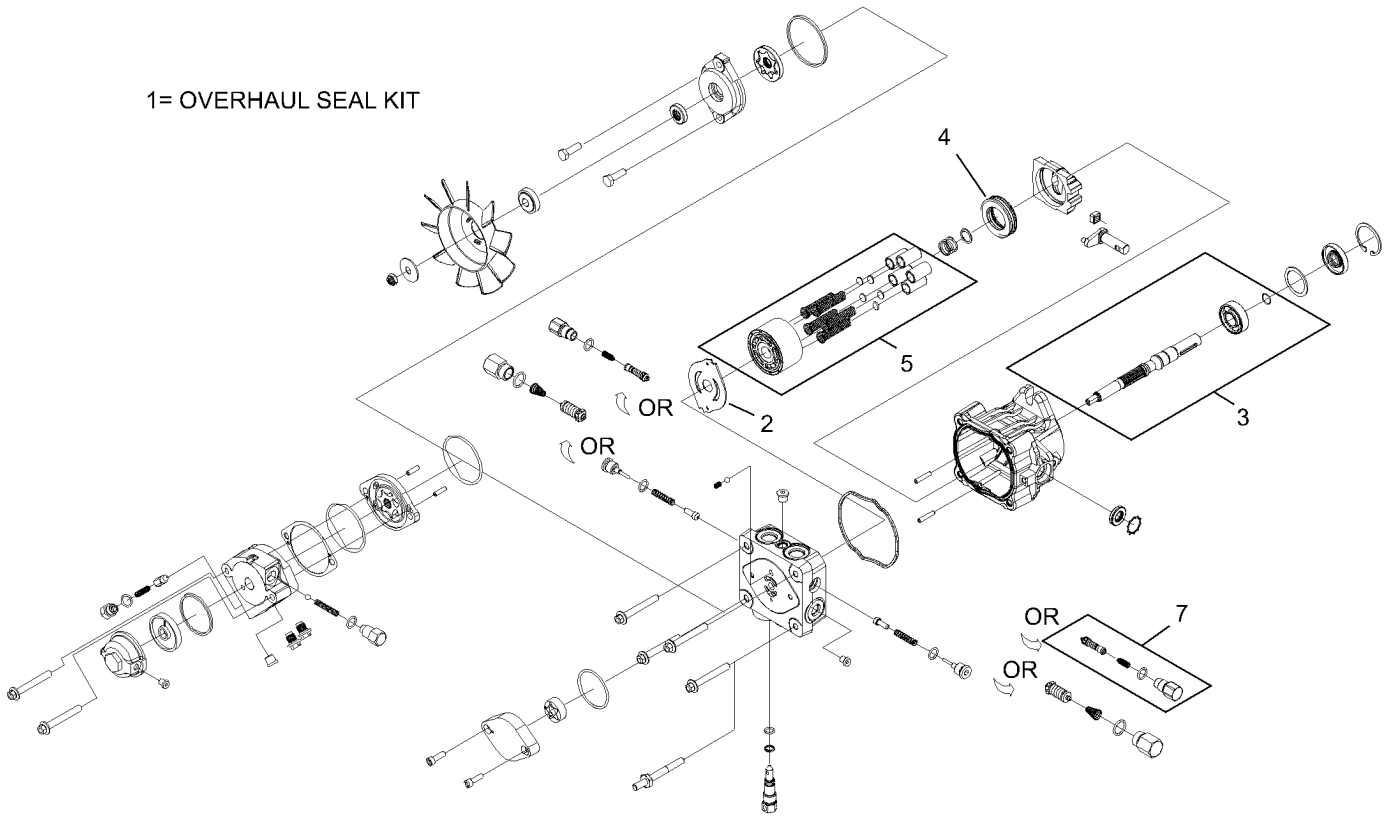
| Ref | Part No. | Qty. | Description |
|---|---|---|---|
| 1 | 103-1942 | 2 | Pump-HYD |
| 3 | 103-1799 | 2 | Elbow-90 DEG |
| 3:1 | 237-42 | 1 | O-Ring |
| 5 | 103-1988 | 3 | Clamp-Hose |
| 7 | 1-653156 | 2 | Pulley |
| 8 | 1-803050 | 4 | Screw-Set |
| 9 | 1-807272 | 2 | Key |
| 10 | 323-7 | 4 | Screw-HH |
| 11 | 3290-357 | 4 | Nut-HHF |
| 15 | 103-2644 | 1 | Decal-Exhaust |
| 16 | 103-1802 | 2 | Fitting-Hyd, 90 DEG |
| 16:1 | 1-603921 | 1 | O-Ring |
| 17 | 103-1940 | 4 | Adapter-Hyd, Straight |
| 17:1 | 237-79 | 1 | O-Ring |
| 17:2 | 1-603992 | 1 | O-Ring |
| 18 | 1-633605 | 2 | Fitting-Hyd, 90 DEG |
| 18:1 | 1-603992 | 1 | O-Ring |
| 18:2 | 237-80 | 1 | O-Ring |
| 19 | 1-653186 | 1 | Hose-Front |
| 20 | 1-653187 | 1 | Hose-Rear, RH |
| 21 | 103-2357 | 1 | HYD Hose ASM |
| 22 | 103-1801 | 1 | Adapter-Straight |
| 22:1 | 237-42 | 1 | O-Ring |
| 23 | 103-1912 | 1 | Adapter-Straight |

| Ref | Part No. | Qty. | Description |
|---|---|---|---|
| 23:1 | 237-42 | 1 | O-Ring |
| 24 | 103-1947 | 1 | HYD Reservoir ASM |
| ❷24:1 | | 1 | Reservoir-HYD |
| 24:1:1 | 103-1948 | 1 | Cap-Reservoir, HYD |
| 24:1:2 | 103-1949 | 1 | Gasket-Cap |
| 24:2 | 1-523552 | 1 | Decal-Tank, HYD |
| 25 | 103-3071-03 | 1 | Stand-Reservoir |
| 26 | 322-3 | 1 | Screw-HH |
| 27 | 321-3 | 2 | Screw-HH |
| 29 | 103-3077 | 1 | HYD Hose ASM |
| 30 | 103-2930 | 1 | HYD Hose ASM |
| 32 | 103-2889 | 1 | Filter Head ASM |
| 32:1 | 103-1912 | 2 | Adapter-Straight |
| 32:1:1 | 237-42 | 1 | O-Ring |
| 33 | 32128-20 | 2 | Nut-HF |
| 34 | 1-633750 | 1 | Filter-HYD |
| 34 | 1-633752 | 1 | Filter-Hyd, Winter |
| 35 | 321-6 | 2 | Screw-HH |
| 36 | 1-805004 | 2 | Washer-Lock |
| 37 | 103-1716 | 3 | Clamp-Hose |
| 38 | 322-5 | 1 | Screw-HH |
| 39 | 103-3809 | 2 | Hose-LH |
| 40 | 1-603991 | 2 | Fitting-Straight |
| 40:1 | 237-80 | 1 | O-Ring |



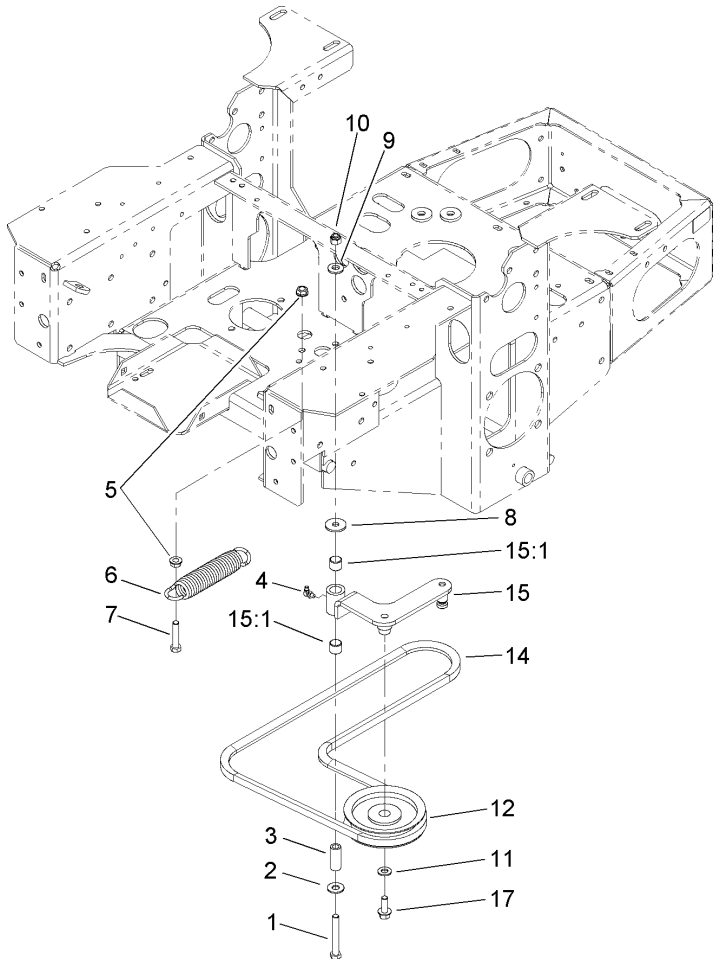

# Hydraulic System Assembly (continued)

| Ref | Part No. | Qty. | Description |
|---|---|---|---|
| 40:2 | 1-603992 | 1 | O-Ring |
| 45 | 3256-22 | 2 | Washer-Flat |



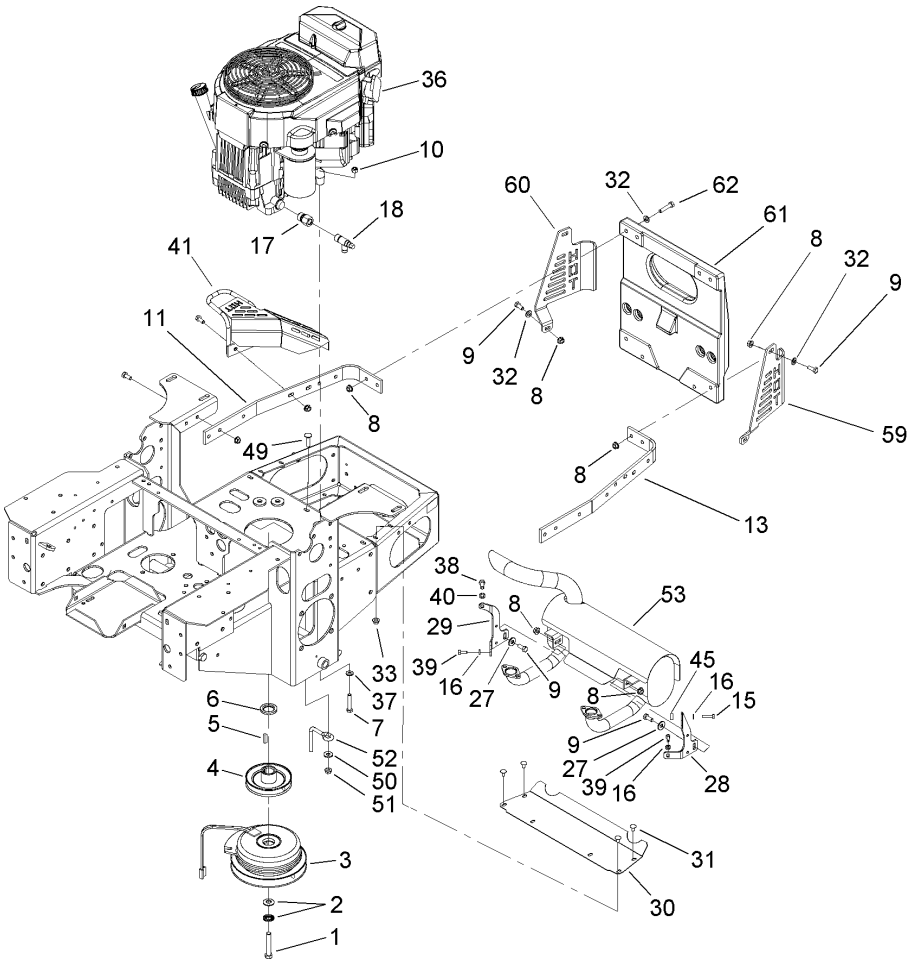

# Hydraulic Pump Assembly No. 103-1942

| Ref | Part No. | Qty. | Description |
|---|---|---|---|
| 1 | 105-6184 | 1 | Seal Kit |
| 2 | 105-6185 | 1 | Plate-Valve |
| 3 | 103-2664 | 1 | Input Shaft Kit |
| 4 | 94-6922 | 1 | Bearing-Thrust |
| 5 | 103-2666 | 1 | Cylinder Block Kit |
| 7 | 106-2053 | 1 | Shock Valve Kit |




# Pump Idler and Belt Assembly

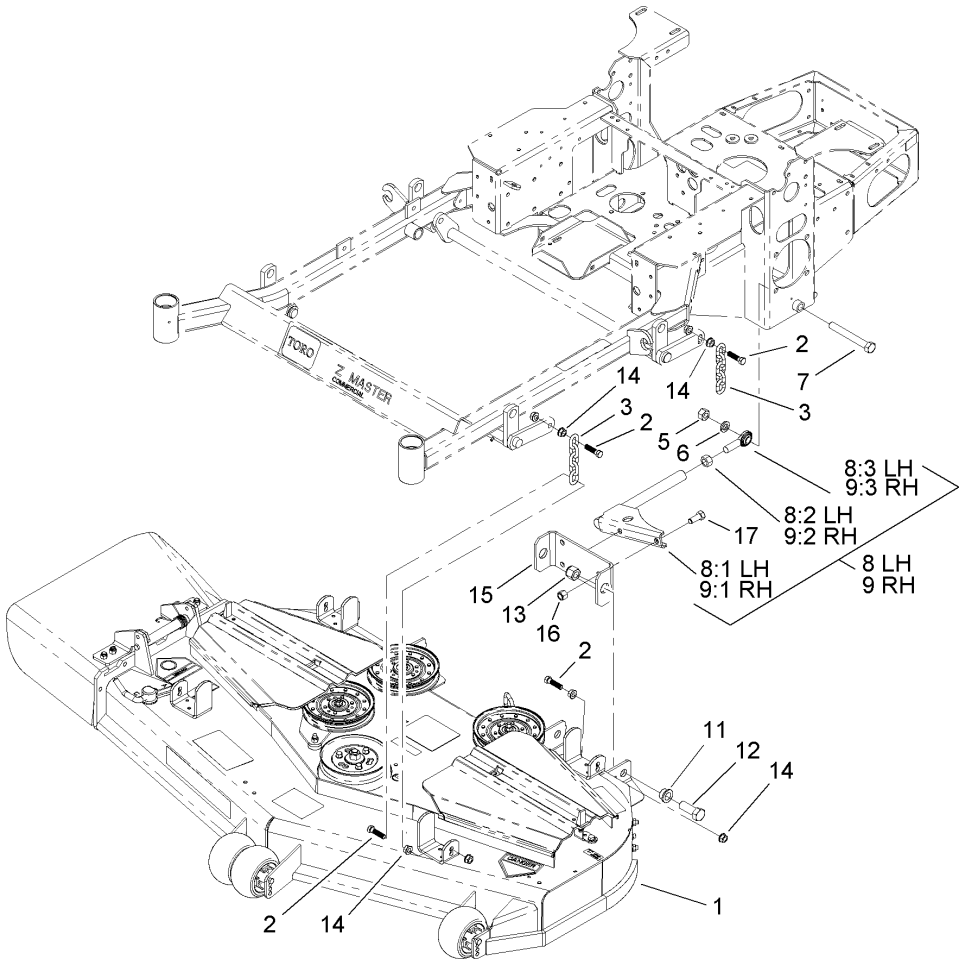
| Ref | Part No. | Qty. | Description |
|---|---|---|---|
| 1 | 323-13 | 1 | Screw-HH |
| 2 | 3256-4 | 1 | Washer-Flat |
| 3 | 1-603044 | 1 | Bushing |
| 4 | 302-40 | 1 | Fitting-Grease |
| 5 | 3290-357 | 2 | Nut-HHF |
| 6 | 103-4480 | 1 | Spring-Extension |
| 7 | 323-9 | 1 | Screw-HH |
| 8 | 63-8410 | 1 | Washer |
| 9 | 98-5975 | 1 | Washer-Belleville |
| 10 | 3296-39 | 1 | Nut-Lock, NI |
| 11 | 3256-24 | 1 | Washer-Flat |
| 12 | 1-603843 | 1 | Pulley-Idler |
| 14 | 107-3960 | 1 | Belt |
| 15 | 103-4482 | 1 | Idler Arm ASM |
| 15:1 | 103-4681 | 2 | Sleeve-Bearing |
| 17 | 3234-11 | 1 | Screw-HHF |




# Engine, Clutch and Muffler Assembly

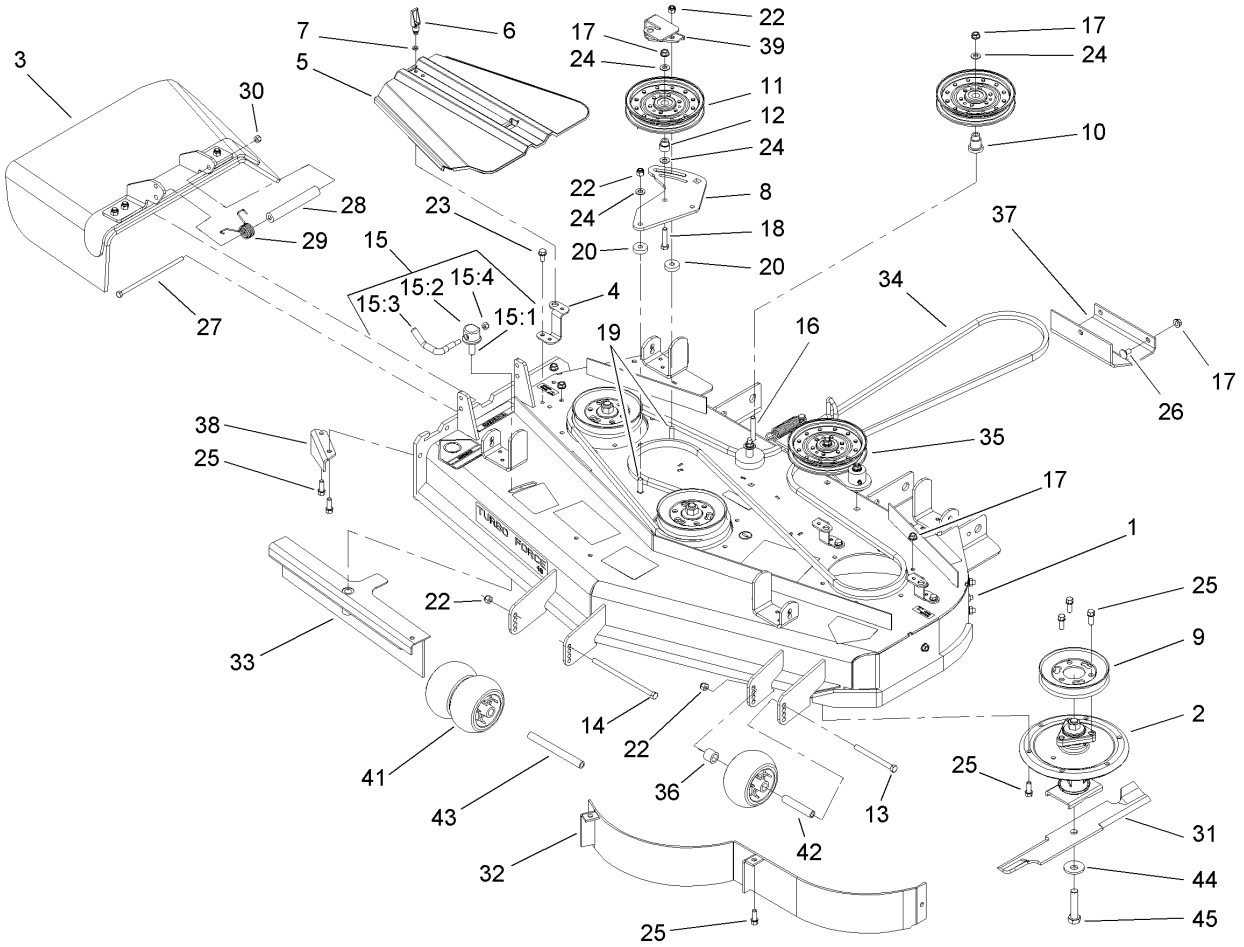
| Ref | Part No. | Qty. | Description |
|---|---|---|---|
| 1 | 3212-12 | 1 | Screw-HH |
| 2 | 1-603610 | 2 | Washer-Spring |
| 3 | 103-0690 | 1 | Clutch |
| 4 | 103-3913 | 1 | Pulley |
| 5 | 1-807259 | 1 | Key |
| 6 | 103-2308 | 1 | Spacer-Crankshaft |
| 7 | 322-9 | 4 | Screw-HH |
| 8 | 32128-20 | 29 | Nut-HF |
| 9 | 322-3 | 15 | Screw-HH |
| 10 | 3296-29 | 4 | Nut-Lock, NI |
| 11 | 103-3078-03 | 1 | Strap-Guard, RH |
| 13 | 103-3164-03 | 1 | Strap-Guard, LH |
| 15 | 33113-025 | 1 | Screw-HH |
| 16 | 1-805004 | 3 | Washer-Lock |
| 17 | 103-1966 | 1 | Adapter |
| 18 | 103-1965 | 1 | Valve-Drain, Oil |
| 27 | 3256-3 | 3 | Washer-Flat |
| 28 | 103-2993-03 | 1 | Bracket-Muffler, LH |
| 29 | 103-2994-03 | 1 | Bracket-Muffler, RH |
| 30 | 103-2740-03 | 1 | Deflector-Short |
| 31 | 3229-10 | 4 | Screw-CARR |
| 32 | 3256-23 | 12 | Washer-Flat |
| 33 | 32128-33 | 4 | Nut-HF |
| ❷36 | | 1 | Engine-Kawasaki, Fh680v-As21 |

| Ref | Part No. | Qty. | Description |
|---|---|---|---|
| 37 | 1-303334 | 4 | Washer-Spring |
| 38 | 33114-020 | 1 | Screw-HH |
| 39 | 33113-016 | 2 | Screw-HH |
| 40 | 1-805005 | 1 | Washer-Lock |
| 41 | 103-3218-03 | 1 | Guard-Tailpipe |
| 45 | 103-3096 | 1 | Spacer |
| 49 | 3230-3 | 1 | Screw-CARR |
| 50 | 3256-3 | 1 | Washer-Flat |
| 51 | 32128-20 | 1 | Nut-HF |
| 52 | 108-1058 | 1 | Rod-Belt |
| 53 | 103-3427 | 1 | Muffler Kit |
| 59 | 103-3287-03 | 1 | Guard-Muffler, LH |
| 60 | 103-3288-03 | 1 | Guard-Muffler, RH |
| 61 | 107-8421-03 | 1 | Weight-Notched, 60 Lb |
| 62 | 322-7 | 8 | Screw-HH |




# Deck Connection Assembly

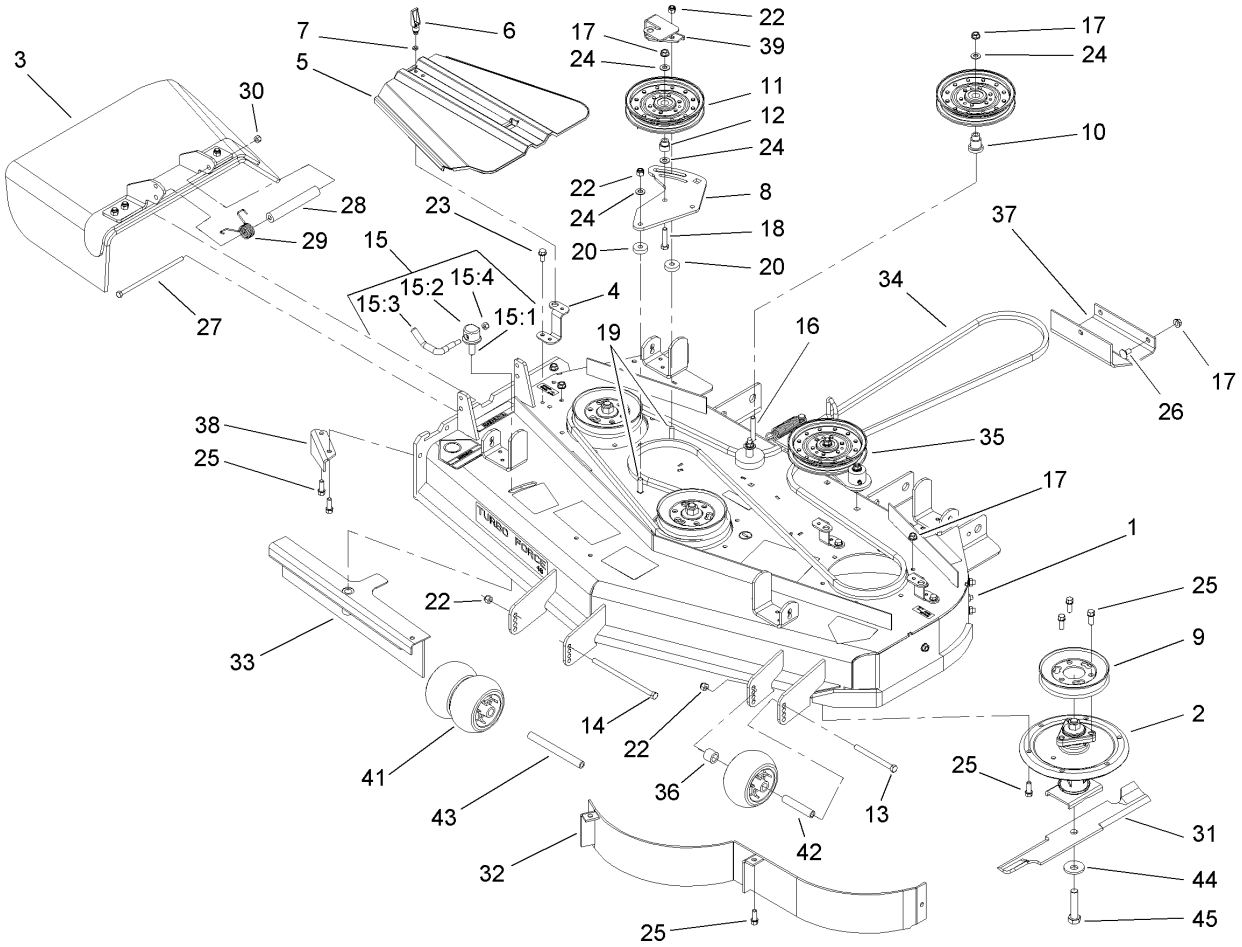
| Ref | Part No. | Qty. | Description |
|---|---|---|---|
| 1 | 107-3190 | 1 | Deck ASM |
| 2 | 103-1898 | 8 | Screw-HH |
| 3 | 1-633447 | 4 | Chain-Lift, Deck |
| 5 | 3217-11 | 2 | Nut-Hex |
| 6 | 3253-8 | 2 | Washer-Lock |
| 7 | 1-800344 | 2 | Screw-HH |
| 8 | 107-3150 | 1 | LH Strut ASM |
| 8:1 | 107-3103-01 | 1 | Strut-Compact |
| 8:2 | 3219-6 | 1 | Nut-Hex |
| 8:3 | 1-633029 | 1 | Balljoint-Spherical |
| 9 | 107-1659 | 1 | RH Strut ASM |
| 9:1 | 107-3103-01 | 1 | Strut-Compact |
| 9:2 | 1-633029 | 1 | Balljoint-Spherical |
| 9:3 | 3219-6 | 1 | Nut-Hex |
| 11 | 93-2877 | 4 | Bushing |
| 12 | 328-24 | 4 | Screw-HH |
| 13 | 3296-51 | 4 | Nut-Lock, NI |
| 14 | 32128-37 | 16 | Nut-HF |
| 15 | 107-3100-01 | 2 | Base-Strut |
| 16 | 3296-23 | 4 | Nut-Lock, NI |
| 17 | 325-5 | 4 | Screw-HH |




# Deck Assembly No. 107-3190

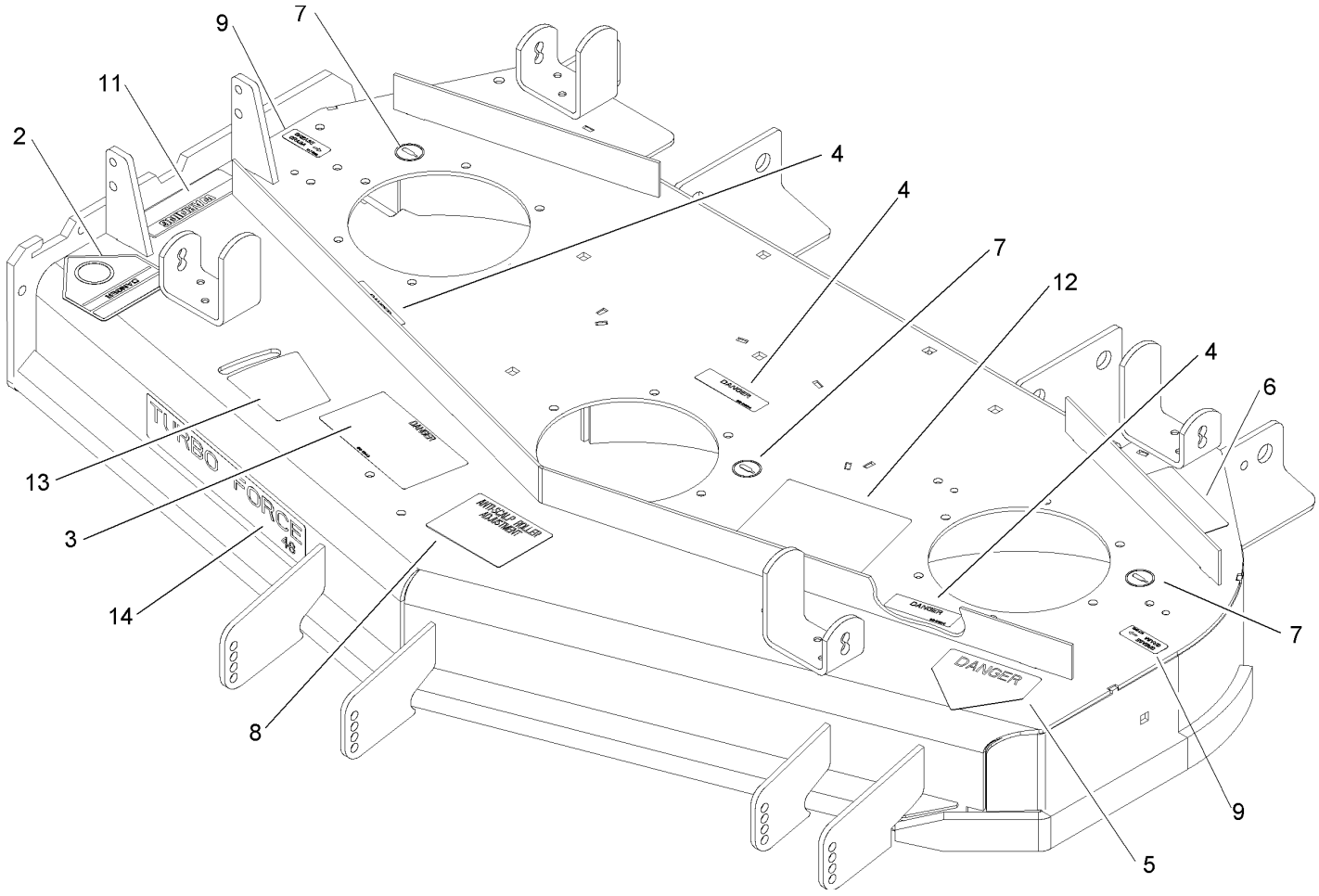
| Ref | Part No. | Qty. | Description |
|---|---|---|---|
| 1 | 107-8515 | 1 | Deck Decal ASM |
| 2 | 107-8504 | 3 | Spindle ASM |
| 3 | 108-4060 | 1 | Rubber Deflector ASM |
| 4 | 108-2177-01 | 3 | Bracket-Cover, Tall |
| 5 | 107-8536 | 2 | Cover-Belt |
| 6 | 74-5950 | 2 | Latch-Swell |
| 7 | 99-3058 | 2 | Washer |
| 8 | 107-8516-01 | 1 | Plate-Idler |
| 9 | 107-1684 | 3 | Pulley |
| 10 | 106-3214 | 1 | Mount-Pulley |
| 11 | 1-633109 | 2 | Idler-Flat |
| 12 | 1-603496 | 1 | Bushing-Idler |
| 13 | 323-23 | 1 | Screw-HH |
| 14 | 323-28 | 1 | Screw-HH |
| 15 | 107-1664 | 1 | Lever ASM |
| 15:1 | 106-3239 | 1 | Screw-Lock |
| 15:2 | 107-1644 | 1 | Cap-Lock |
| 15:3 | 106-3241 | 1 | Lever-Lock |
| 15:4 | 3296-29 | 1 | Nut-Lock, NI |
| 16 | 323-12 | 1 | Screw-HH |
| 17 | 3290-357 | 32 | Nut-HHF |
| 18 | 323-9 | 1 | Screw-HH |
| 19 | 3231-4 | 2 | Screw-CARR |
| 20 | 105-7788 | 2 | Spacer |

| Ref | Part No. | Qty. | Description |
|---|---|---|---|
| 22 | 3296-39 | 4 | Nut-Lock, NI |
| 23 | 32144-70 | 3 | Screw-HH |
| 24 | 3256-24 | 4 | Washer-Flat |
| 25 | 92-1624 | 32 | Screw |
| 26 | 3231-1 | 7 | Screw-CARR |
| 27 | 322-50 | 1 | Screw-HH |
| 28 | 105-4622 | 1 | Spacer |
| 29 | 107-1663 | 1 | Spring-Torsion |
| 30 | 3296-29 | 1 | Nut-Lock, NI |
| 31 | 107-3192-03 | 3 | Blade-Rotary, 16.5 High Flow |
| 32 | 107-8510-01 | 1 | Baffle ASM |
| 33 | 107-8506-01 | 1 | Baffle ASM |
| 34 | 106-7369 | 1 | Belt-V |
| ❷35 | | 1 | Idler ASM |
| 36 | 98-7913 | 1 | Tube-Spacer |
| 37 | 107-3166-01 | 1 | Skid |
| 38 | 107-8541-01 | 1 | Baffle-Discharge |
| 39 | 108-2228-01 | 1 | Bracket-Cover |
| 41 | 1-603299 | 3 | Roller-Anti Scalp |
| 42 | 98-7912 | 1 | Tube-Spanner |
| 43 | 98-5967 | 1 | Spacer-Wheel |
| 44 | 103-0865 | 3 | Washer-Blade Bolt, Heavy |
| 45 | 103-0862 | 3 | Screw-Cap |
| ❶99 | 107-3196-03 | 3 | Blade-Rotary, 16.5in Recycling |



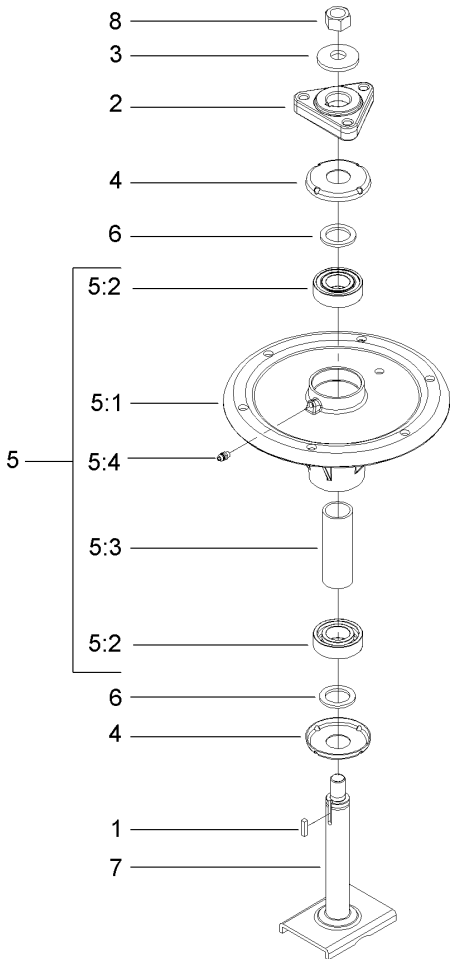

# Deck Assembly No. 107-3190 (continued)

| Ref | Part No. | Qty. | Description |
|---|---|---|---|
| ❶99 | 107-3195-03 | 3 | Blade-Rotary, 16.5 Atomic |
| ❶99 | 107-3194-03 | 3 | Blade-Rotary, 16.5 Med Flow |
| ❶99 | 107-3193-03 | 3 | Blade-Rotary, 16.5 Low Flow |



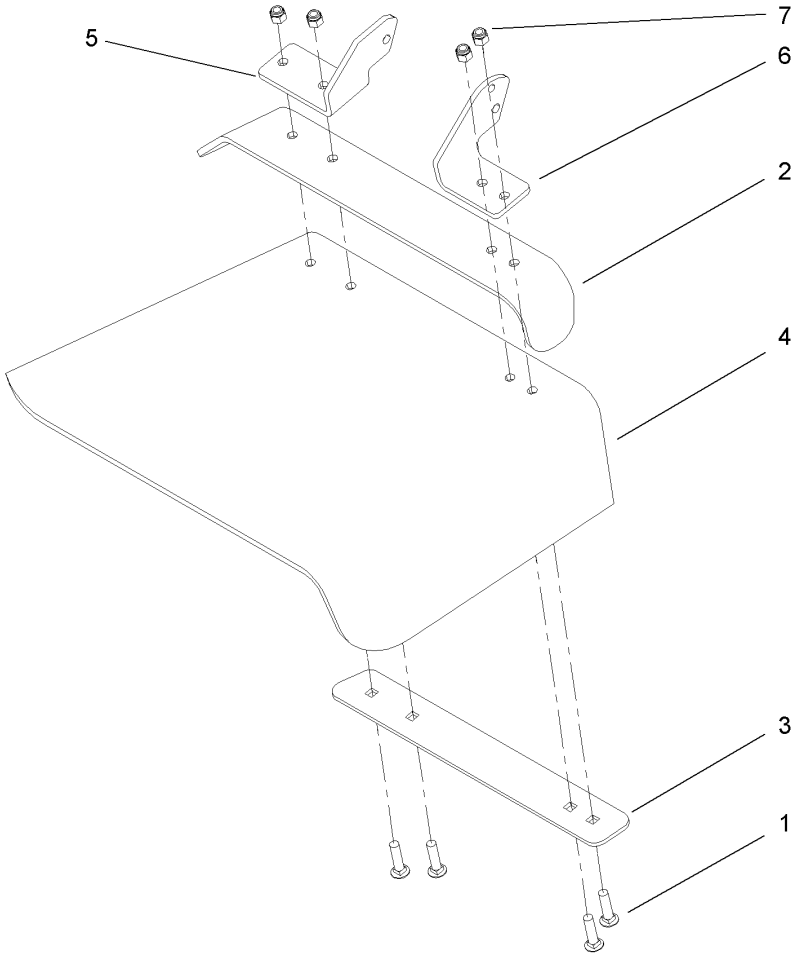

# Deck Decal Assembly No. 107-8515

| Ref | Part No. | Qty. | Description |
|---|---|---|---|
| 2 | 54-9220 | 1 | Decal-Danger |
| 3 | 66-1340 | 1 | Decal-Danger |
| 4 | 98-5954 | 3 | Decal-Missing, Cover |
| 5 | 1-403005 | 1 | Decal-Danger |
| 6 | 68-8340 | 1 | Decal-Torque |
| 7 | 58-6520 | 3 | Decal-Grease |
| 8 | 105-7798 | 1 | Decal-Anti Scalp |
| 9 | 107-1613 | 2 | Decal-Grease |
| 11 | 104-8569 | 1 | Decal-Warning |
| 12 | 107-1687 | 1 | Decal-Aid, Service |
| 13 | 107-1688 | 1 | Decal-Adjustment, Baffle |
| 14 | 107-1690 | 1 | Decal |



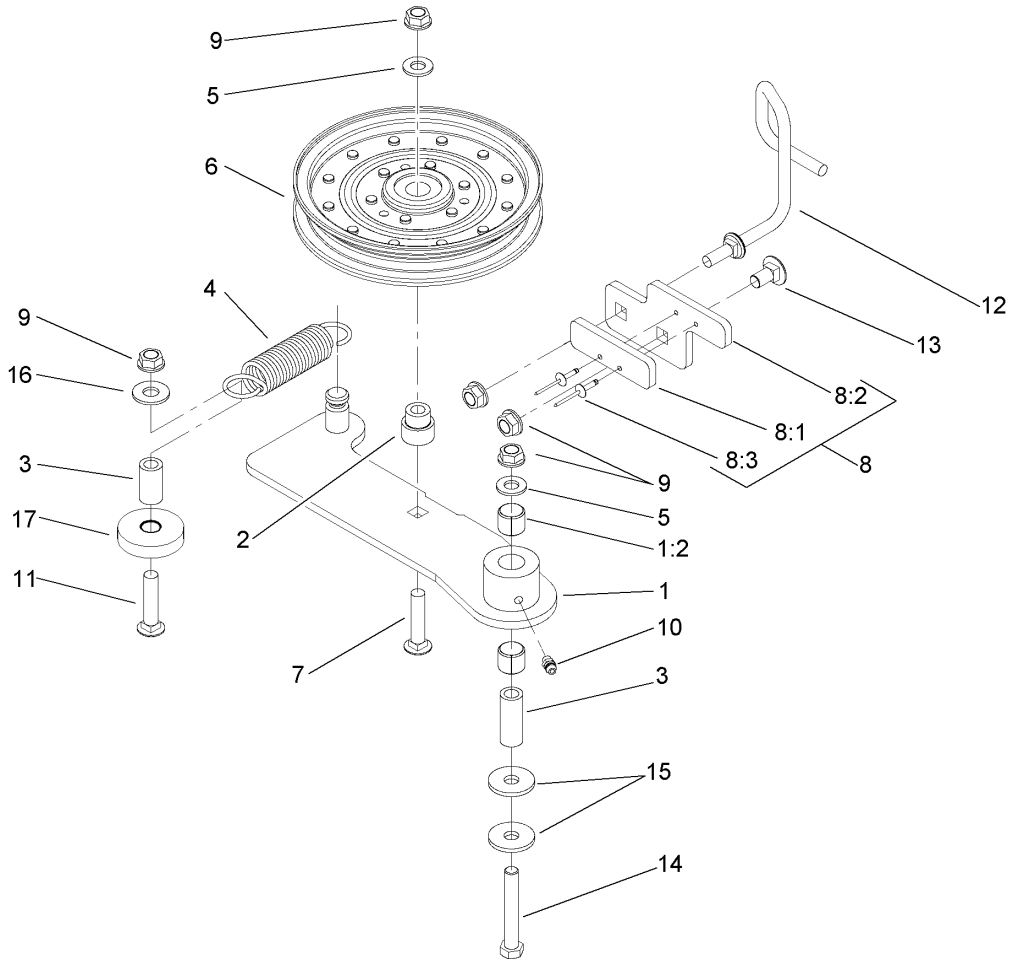

# Spindle Assembly No. 107-8504

| Ref | Part No. | Qty. | Description |
|---|---|---|---|
| 1 | 10-8040 | 1 | Key-Square |
| 2 | 106-3277 | 1 | Hub-Pulley |
| 3 | 103-0865 | 1 | Washer-Blade Bolt, Heavy |
| 4 | 106-3204 | 2 | Shield-Bearing |
| ❷5 | | 1 | Spindle Bearing ASM |
| 5:1 | 106-3211 | 1 | Housing-Spindle |
| 5:2 | 113514 | 2 | Bearing-Ball |
| 5:3 | 107-8502 | 1 | Spacer-Bearing |
| 5:4 | 302-5 | 1 | Fitting-Grease |
| 6 | 3-8514 | 2 | Washer-Thrust |
| 7 | 107-8501 | 1 | Spindle ASM |
| 8 | 3219-6 | 1 | Nut-Hex |



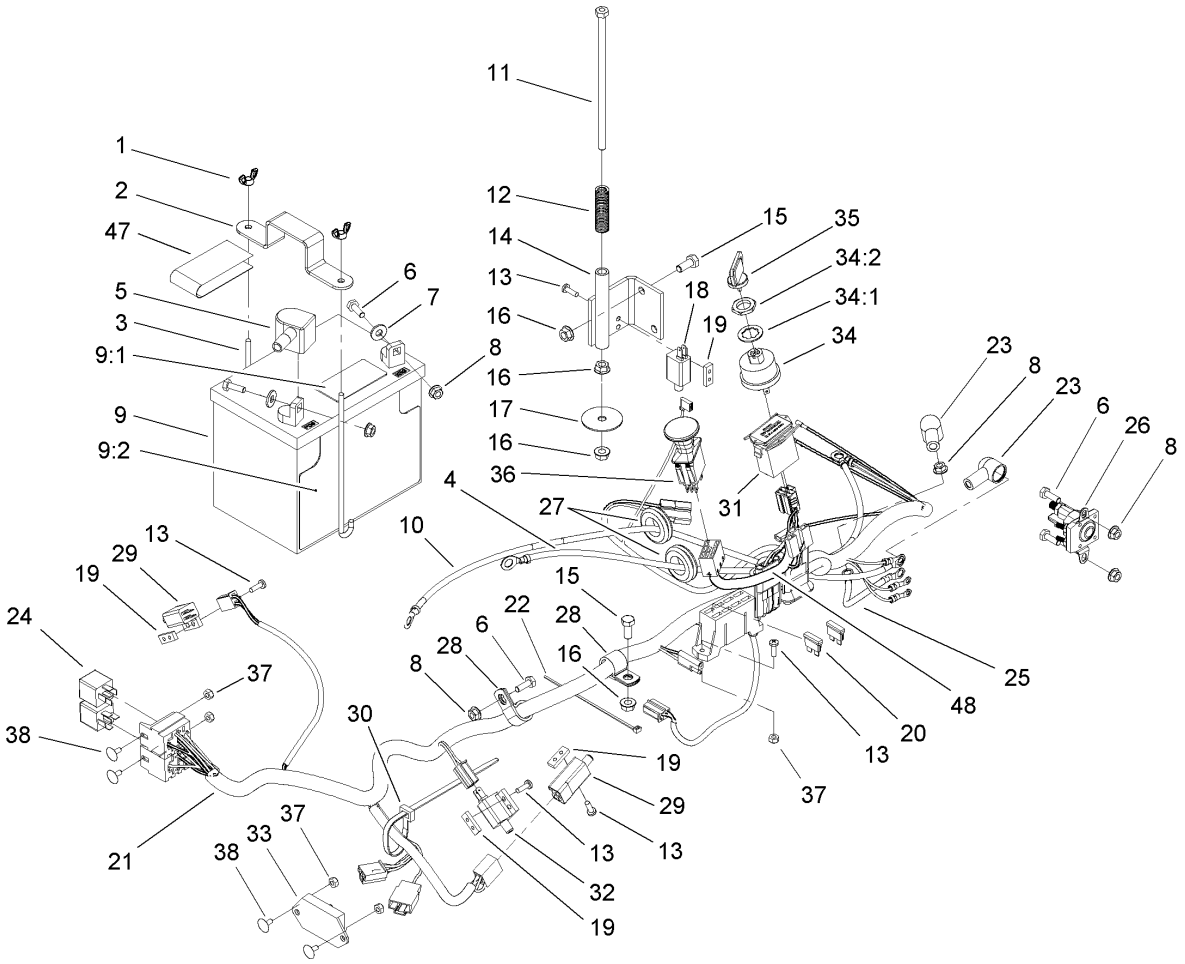

# Rubber Deflector Assembly No. 108-4060

| Ref | Part No. | Qty. | Description |
|---|---|---|---|
| 1 | 3231-4 | 4 | Screw-CARR |
| 2 | 106-3246-01 | 1 | Deflector |
| 3 | 106-3248-03 | 1 | Strap-Discharge |
| 4 | 107-1617 | 1 | Defelector-Rubber |
| 5 | 108-4059-01 | 1 | Plate-Hinge, Rear |
| 6 | 108-4058-01 | 1 | Plate-Hinge, Front |
| 7 | 3296-39 | 4 | Nut-Lock, NI |




# Idler Assembly

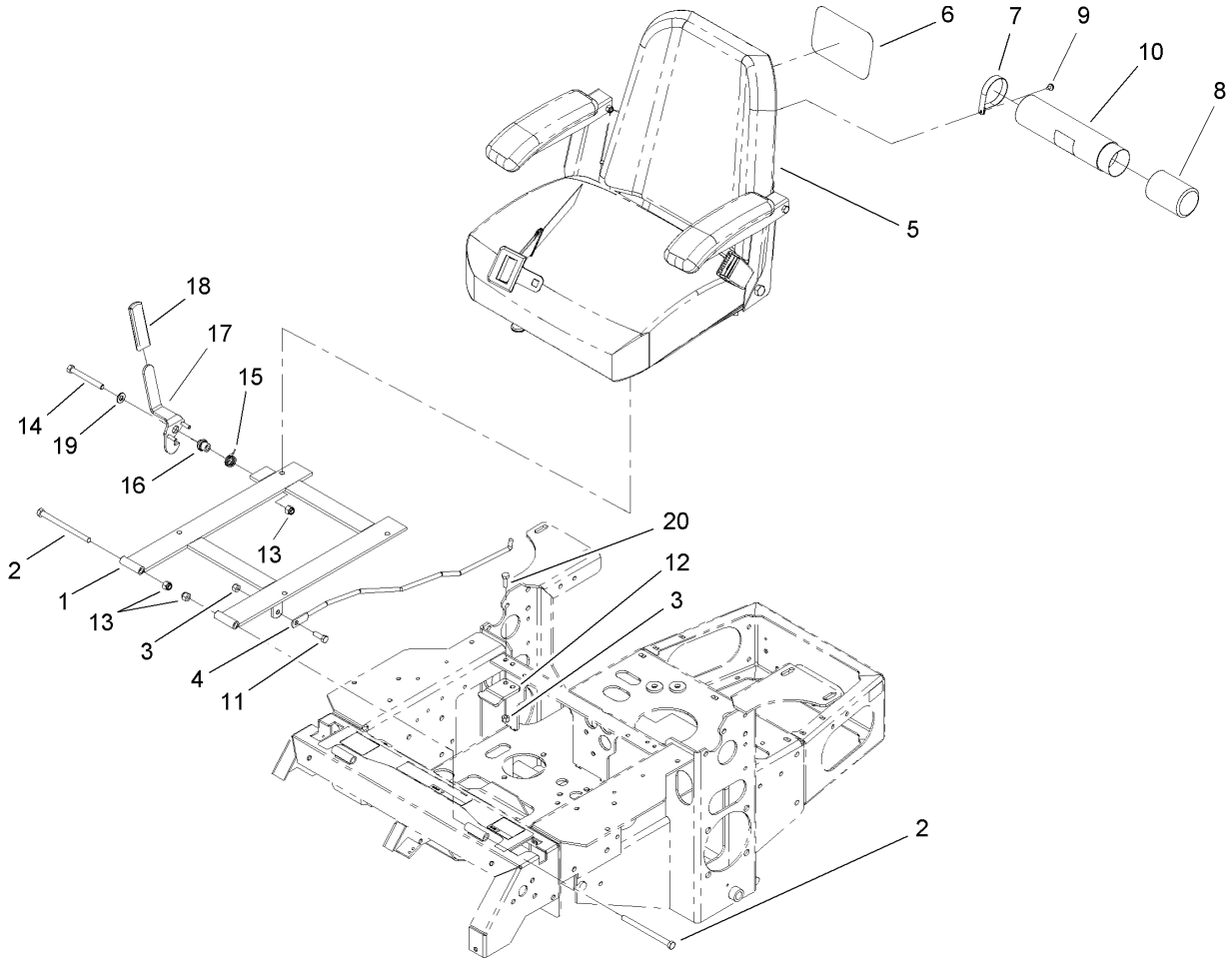
| Ref | Part No. | Qty. | Description |
|---|---|---|---|
| 1 | 108-4062 | 1 | Idler Arm ASM |
| 1:2 | 103-4681 | 2 | Sleeve-Bearing |
| 2 | 1-603496 | 1 | Bushing-Idler |
| 3 | 1-603044 | 2 | Bushing |
| 4 | 1-603402 | 1 | Spring-Extension |
| 5 | 3256-24 | 2 | Washer-Flat |
| 6 | 1-633109 | 1 | Idler-Flat |
| 7 | 3231-6 | 1 | Screw-CARR |
| ❷8 | | 1 | Stop Pad ASM |
| 8:1 | 106-3229 | 1 | Pad-Bumber |
| 8:2 | 107-1697-01 | 1 | Plate-Stop |
| 8:3 | 3269-24 | 2 | Rivet |
| 9 | 3290-357 | 5 | Nut-HHF |
| 10 | 302-5 | 1 | Fitting-Grease |
| 11 | 3231-31 | 1 | Screw-CARR |
| 12 | 108-4072 | 1 | Guide-Belt |
| 13 | 3231-1 | 1 | Screw-CARR |
| 14 | 323-12 | 1 | Screw-HH |
| 15 | 2844 | 2 | Washer |
| 16 | 3256-4 | 1 | Washer-Flat |
| 17 | 108-2239 | 1 | Stop-Plastic |


11
1
2
47
12
14
13
16
15
35
34:2
34:1
34
18
19
5
3
9:1
6
7
8
16
17
16
9
9:2
36
4
27
31
23
8
23
6
26
8
10
15
22
28
6
28
16
8
25
48
20
13
37
30
19
29
13
13
32
19
24
37
38
21
33
37
38
13
29
19
13

# Electrical System Assembly

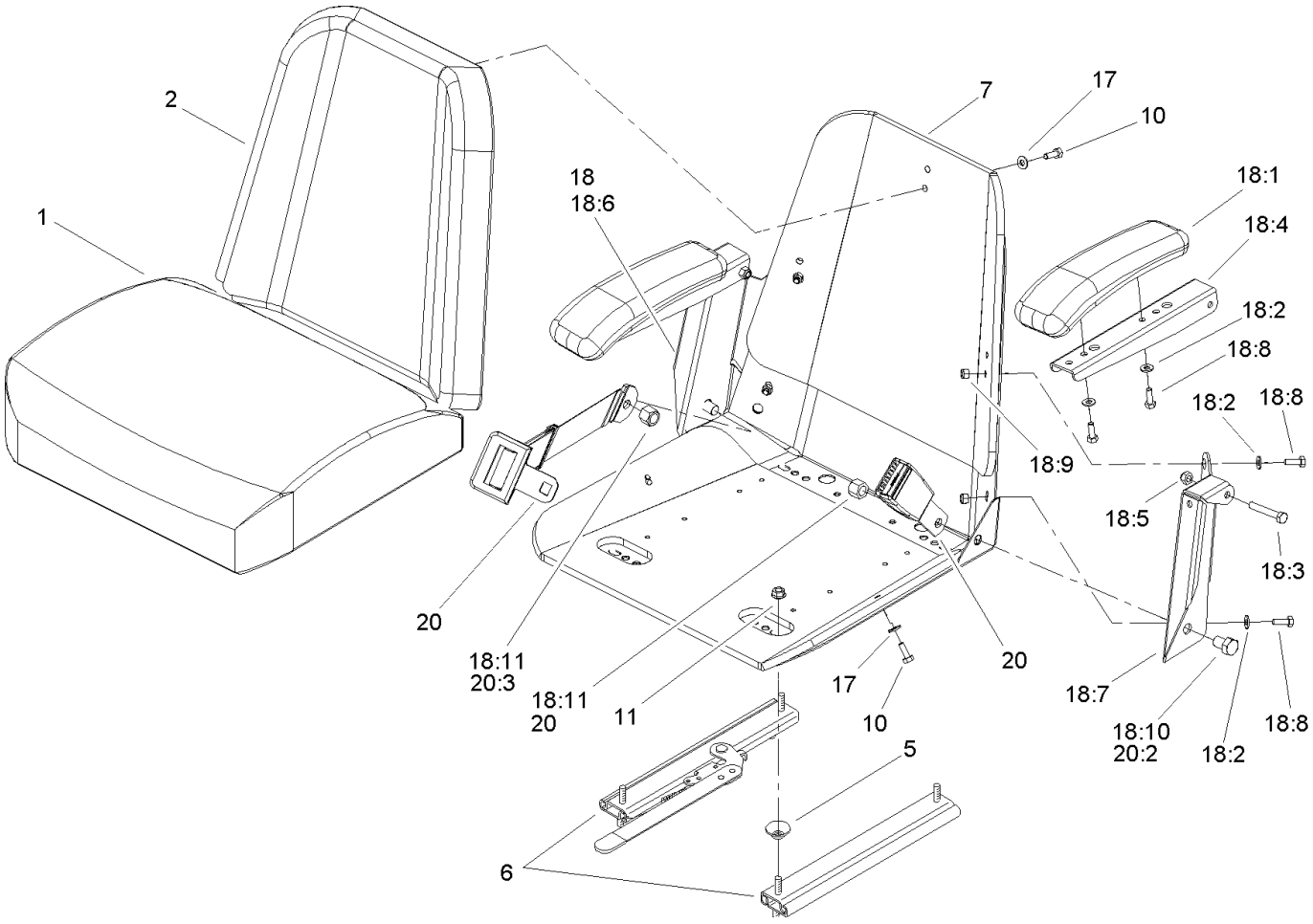
| Ref | Part No. | Qty. | Description |
|---|---|---|---|
| 1 | 1-543792 | 2 | Wingnut |
| 2 | 1-633652-03 | 1 | Strap-Holddown |
| 3 | 1-633651 | 2 | Bolt-Holddown |
| 4 | 103-0705 | 1 | Cable-Ground, Negative |
| 5 | 1-543391 | 1 | Insulator-Battery |
| 6 | 321-4 | 5 | Screw-HH |
| 7 | 3256-2 | 2 | Washer-Flat |
| 8 | 32128-33 | 6 | Nut-HF |
| 9 | 105-1692 | 1 | Battery |
| 9:1 | 104-4163 | 1 | Decal-Battery |
| 9:2 | 104-4164 | 1 | Decal-Battery |
| 10 | 103-0707 | 1 | Cable-Battery, Positive |
| 11 | 1-800282 | 1 | Screw-HH |
| 12 | 1-523415 | 1 | Spring-Switch, Seat |
| 13 | 1-803075 | 10 | Screw-Head, Truss |
| 14 | 1-652072-03 | 1 | Bracket-Switch, Seat |
| 15 | 322-3 | 3 | Screw-HH |
| 16 | 32128-20 | 5 | Nut-HF |
| 17 | 1-653036 | 1 | Washer |
| 18 | 1-513152 | 1 | Switch-Closed, Normally |
| 19 | 1-633181 | 4 | Plate-Tapped |
| 20 | 1-816001 | 2 | Fuse-Blade Type, 20 Amp |
| 21 | 107-8051 | 1 | Harness-Electrical |
| 22 | 1-303287 | 3 | Tie-Plastic |

| Ref | Part No. | Qty. | Description |
|---|---|---|---|
| 23 | 1-543393 | 3 | Insulator-Solenoid |
| 24 | 1-643275 | 2 | Relay |
| 25 | 1-633306 | 1 | Wire-Starter |
| 26 | 1-513075 | 1 | Switch-Solenoid |
| 27 | 1-543286 | 3 | Grommet |
| 28 | 1-633396 | 2 | Clip-Loom |
| 29 | 1-513051 | 2 | Switch-Open, Normally |
| 30 | 1-303335 | 4 | Tie-Plastic |
| 31 | 1-513374 | 1 | Meter-Hour |
| 32 | 1-633111 | 1 | Switch |
| 33 | 100-6186 | 1 | Module-Delay, Seat |
| 34 | 88-9830 | 1 | Key Switch ASM |
| 34:1 | 3254-5 | 1 | Washer-Tooth |
| 34:2 | 218-461 | 1 | Nut-HH |
| 35 | 63-8360 | 2 | Key-Ignition |
| 36 | 1-633673 | 1 | Switch-Delta |
| 37 | 3296-2 | 6 | Nut-Lock |
| 38 | 1-807513 | 4 | Bolt-CARR |
| 47 | 107-9309 | 1 | Decal-Instructions, Charging |
| 48 | 107-8054 | 1 | Harness-Electrical, Control Panel |



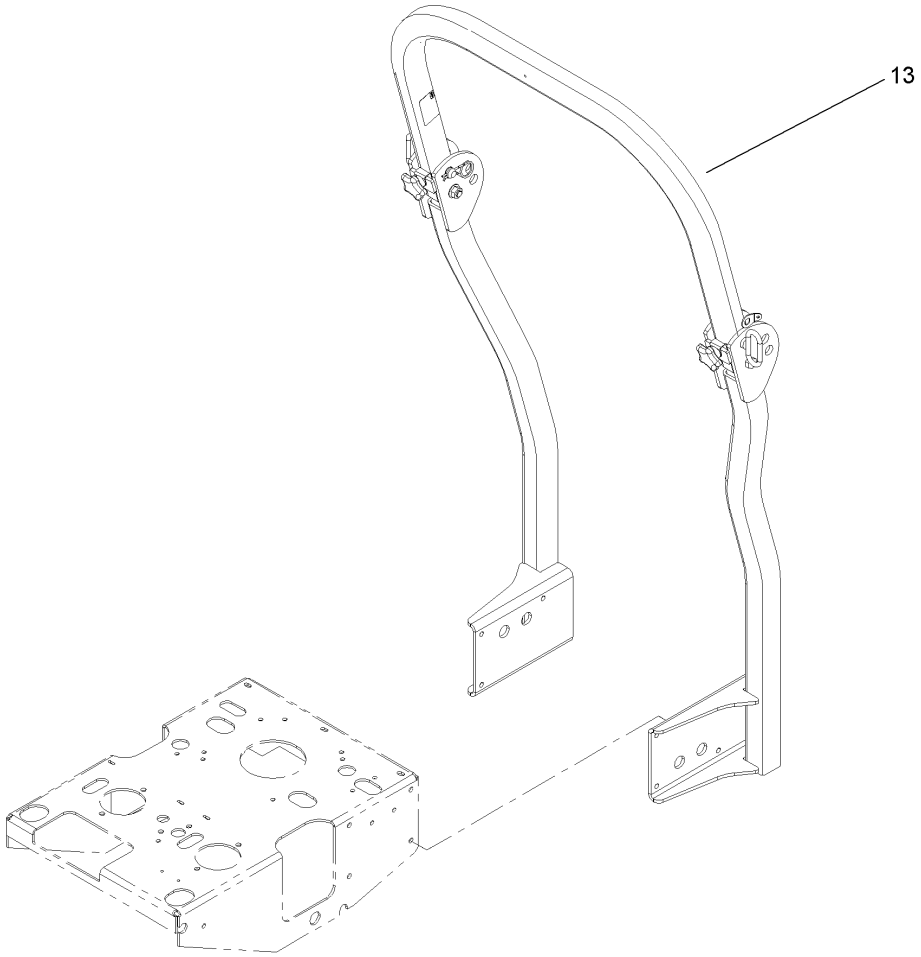

# Seat and Bracket Assembly

| Ref | Part No. | Qty. | Description |
|---|---|---|---|
| 1 | 107-3052-03 | 1 | Seat Support Frame ASM |
| 2 | 323-39 | 2 | Screw-HH |
| 3 | 3296-29 | 3 | Nut-Lock, NI |
| 4 | 103-1731 | 1 | Rod-Retainer, Seat |
| 5 | 107-1867 | 1 | Seat ASM |
| 6 | 99-4693 | 1 | Decal |
| 7 | 2412-120 | 2 | R-Clamp |
| 8 | 104-7048 | 1 | Cap-Housing |
| 9 | 32104-76 | 2 | Screw |
| 10 | 104-7050 | 1 | Housing-Manual |
| 11 | 322-5 | 1 | Screw-HH |
| 12 | 103-5961 | 1 | Catch-Latch, Seat |
| 13 | 3296-39 | 3 | Nut-Lock, NI |
| 14 | 323-20 | 1 | Screw-HH |
| 15 | 107-0076 | 1 | Spring-Torsion |
| 16 | 107-0075 | 1 | Bushing-Latch, Seat |
| 17 | 107-3083 | 1 | Latch ASM |
| 18 | 62-9130 | 1 | Grip-Handle |
| 19 | 3256-24 | 1 | Washer-Flat |
| 20 | 322-4 | 2 | Screw-HH |



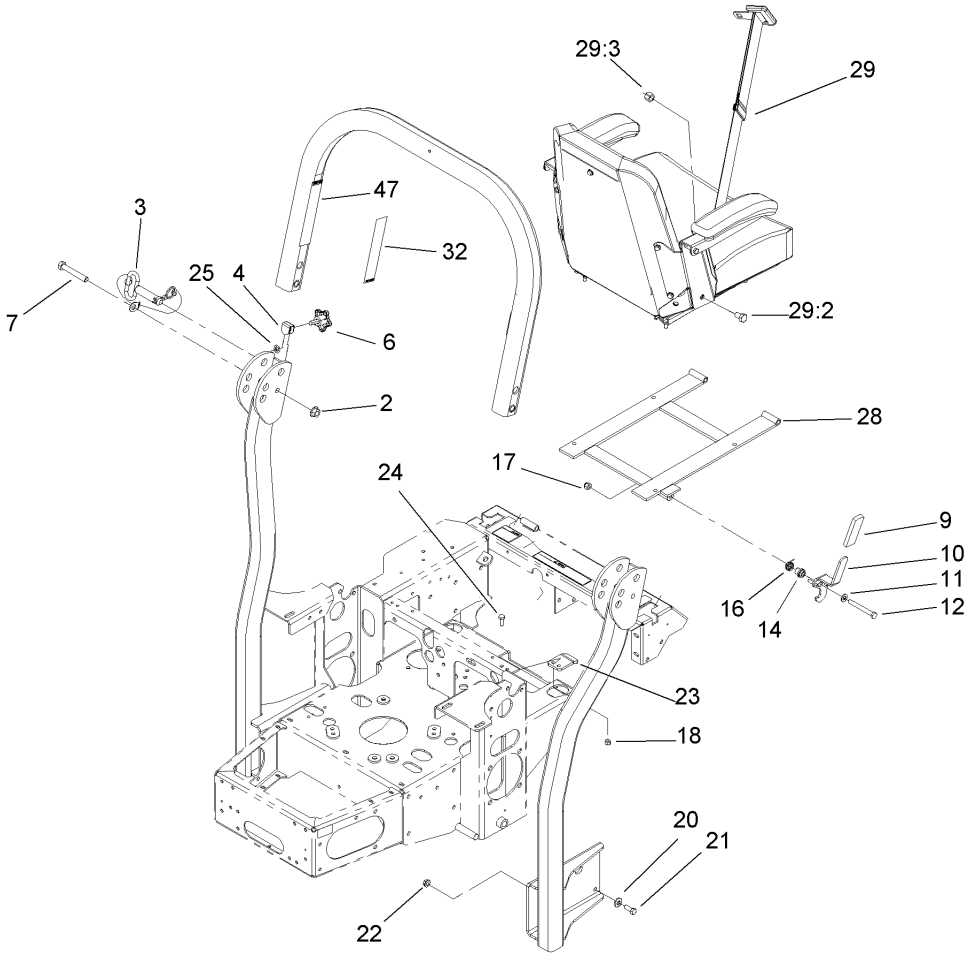

# Seat Assembly No. 107-1867

| Ref | Part No. | Qty. | Description |
|---|---|---|---|
| 1 | 103-0290 | 1 | Cushion-Seat, Bottom |
| 2 | 104-7754 | 1 | Cushion-Seat, Back |
| 5 | 1-543401 | 4 | Spacer-Track |
| 6 | 1-643255 | 1 | Track-Seat |
| 7 | 1-633859 | 1 | Frame-Seat |
| 10 | 321-30 | 11 | Screw-HH |
| 11 | 32128-20 | 4 | Nut-HF |
| 17 | 3256-22 | 11 | Washer-Flat |
| 18 | 105-3620 | 1 | Armrest Kit |
| 18:1 | 1-633710 | 2 | Cushion-Armrest |
| 18:2 | 3256-22 | 4 | Washer-Flat |
| 18:3 | 322-10 | 2 | Screw-HH |
| 18:4 | 105-3623 | 2 | Channel-Armrest |
| 18:5 | 32153-3 | 2 | Nut-Lock, Side |
| 18:6 | 105-3621 | 1 | Bracket-Armrest, RH |
| 18:7 | 105-3622 | 1 | Bracket-Armrest, LH |
| 18:8 | 321-30 | 6 | Screw-HH |
| 18:9 | 3296-42 | 4 | Nut-Lock, NI |
| 18:10 | 325-2 | 2 | Screw-HH |
| 18:11 | 3296-23 | 2 | Nut-Lock, NI |
| 20 | 103-4469 | 1 | Seatbelt Kit |
| 20:2 | 3212-4 | 2 | Screw-HH |
| 20:3 | 3296-38 | 2 | Nut-Lock NI |




# Roll-Over-Protection-System Assembly

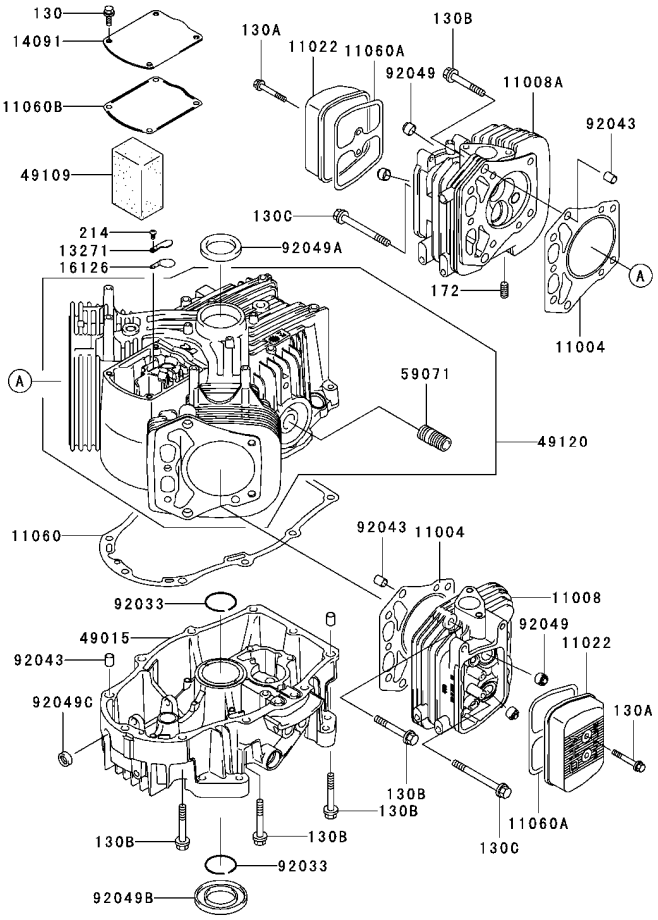
| Ref | Part No. | Qty. | Description |
|---|---|---|---|
| 13 | 107-8093 | 1 | Rops ASM |




# Roll-Over-Protection-System Assembly No. 107-8093

| Ref | Part No. | Qty. | Description |
|---|---|---|---|
| 2 | 32128-23 | 2 | Nut-HF |
| 3 | 103-4553 | 2 | Rops Fold Pin ASM |
| 4 | 107-3124 | 2 | Clip |
| 6 | 106-0887 | 2 | Knob |
| 7 | 325-13 | 2 | Screw-HH |
| 9 | 62-9130 | 1 | Grip-Handle |
| 10 | 107-3083 | 1 | Latch ASM |
| 11 | 3256-24 | 1 | Washer-Flat |
| 12 | 323-20 | 1 | Screw-HH |
| 14 | 107-0075 | 1 | Bushing-Latch, Seat |
| 16 | 107-0076 | 1 | Spring-Torsion |
| 17 | 3296-39 | 1 | Nut-Lock, NI |
| 18 | 3296-29 | 2 | Nut-Lock, NI |
| 20 | 98-5975 | 8 | Washer-Belleville |
| 21 | 323-6 | 8 | Screw-HH |
| 22 | 3290-357 | 8 | Nut-HHF |
| 23 | 107-3059 | 1 | Catch-Latch, Seat |
| 24 | 322-4 | 2 | Screw-HH |
| 25 | 107-3154 | 2 | Nut-Push |
| 28 | 107-3052-03 | 1 | Seat Support Frame ASM |
| 29 | 103-4469 | 1 | Seatbelt Kit |
| 29:2 | 3212-4 | 2 | Screw-HH |
| 29:3 | 3296-38 | 2 | Nut-Lock NI |
| 32 | 107-3069 | 1 | Decal-Warning, Folding Rops |

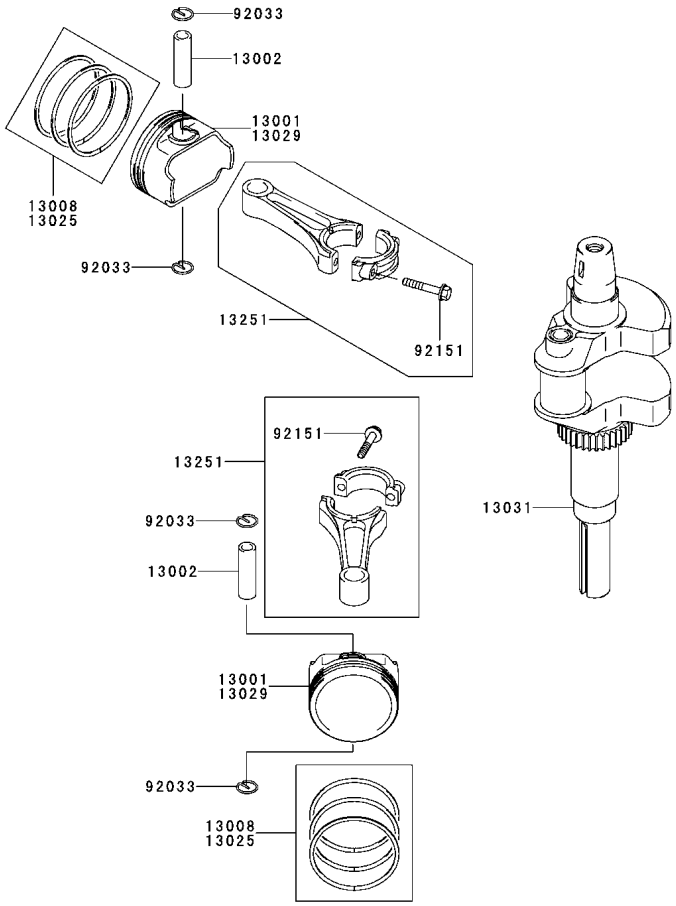
| Ref | Part No. | Qty. | Description |
|---|---|---|---|
| 47 | 107-2102 | 1 | Decal-Warning, Folding Rops |




# Cylinder/Crankcase Assembly
# Kawasaki FH680V-AS21

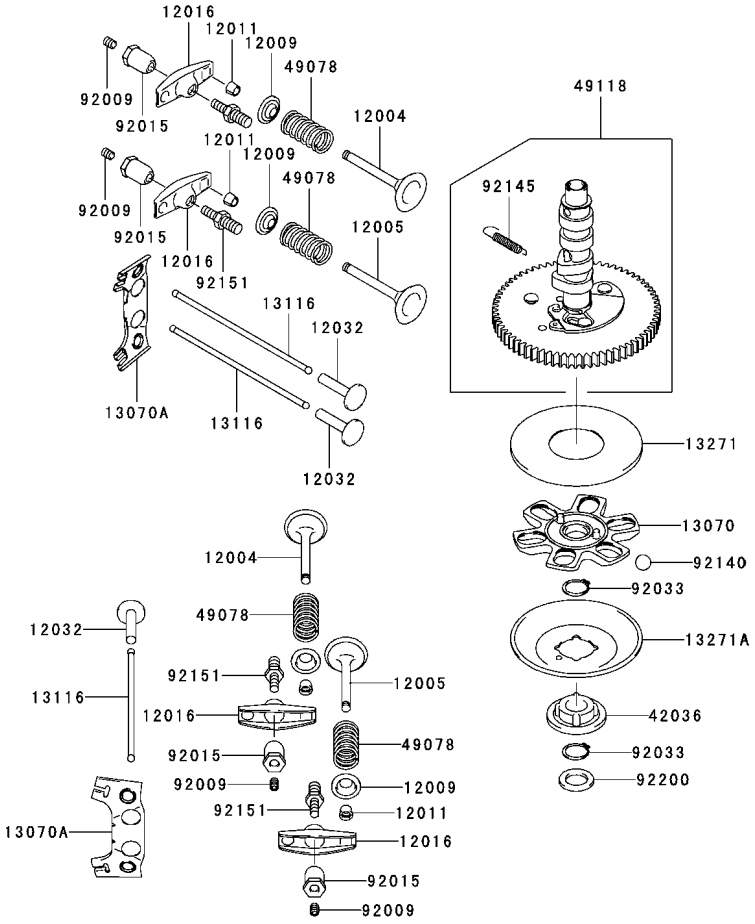
| Ref | Part No. | Qty. | Description |
|---|---|---|---|
| ❸11004 | 11004-7006 | 2 | Gasket-Head |
| ❸11008 | 11008-7012 | 1 | Head-Comp-Cylinder No. 2 |
| ❸11008A | 11008-7013 | 1 | Head-Comp-Cylinder No. 1 |
| ❸11022 | 11022-7002 | 2 | Case-Rocker |
| ❸11060 | 11060-7012 | 1 | Gasket, Crankcase Cover |
| ❸11060A | 11060-7013 | 2 | Gasket, Rocker Case |
| ❸11060B | 11060-7014 | 1 | Gasket, Breather |
| ❸13271 | 13271-7006 | 1 | Plate |
| ❸14091 | 14091-7004 | 1 | Cover |
| ❸16126 | 16126-7001 | 1 | Valve |
| ❸49015 | 49015-6225 | 1 | Cover-Crankcase |
| ❸49109 | 49109-7003 | 1 | Element-Breather |
| ❸49120 | 49120-7019 | 1 | Crankcase-Comp |
| ❸59071 | 59071-2079 | 1 | Joint |
| ❸92033 | 92033-7004 | 2 | Ring-Snap |
| ❸92043 | 92043-7001 | 6 | Pin |
| ❸92049 | 92049-7001 | 4 | Seal-Oil, Rvc2 (6x11x10.2) |
| ❸92049A | 92049-7002 | 1 | Seal-Oil |
| ❸92049B | 92049-7004 | 1 | Seal-Oil |
| ❸92049C | 92049-7005 | 1 | Seal-Oil,so 8x14x5 HS |
| ❸130 | 130B0612 | 4 | Bolt-Flanged |
| ❸130A | 130B0640 | 4 | Bolt-Flanged |
| ❸130B | 130T0850 | 18 | Bolt-Flanged |
| ❸130C | 130T0875 | 2 | Bolt-Flanged |

| Ref | Part No. | Qty. | Description |
|---|---|---|---|
| ❸172 | 172G0818 | 4 | Bolt-Stud |
| ❸214 | 214B0408 | 1 | Screw-Pan |



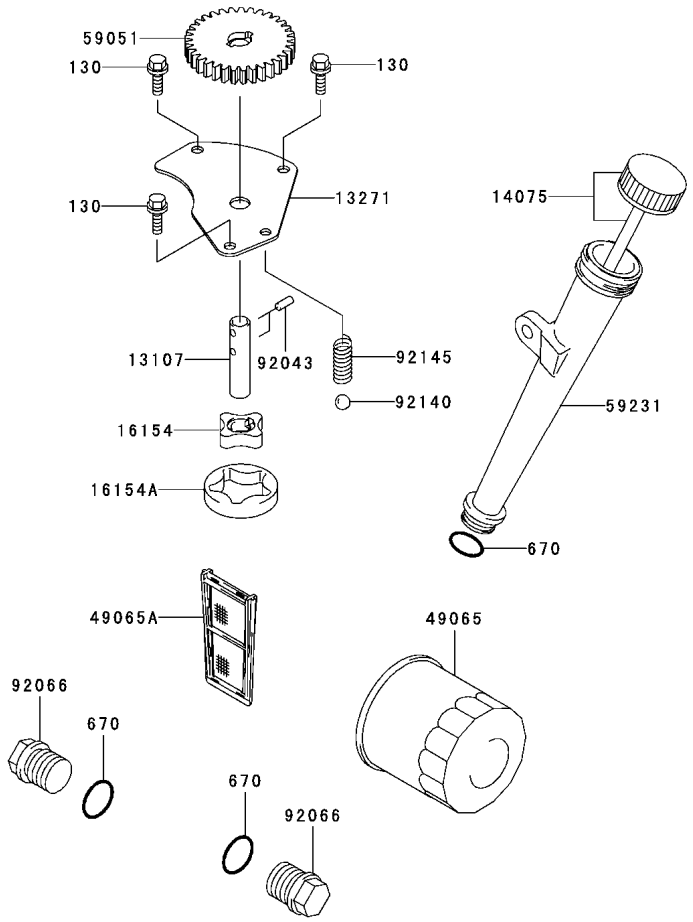

# Piston/Crankshaft Assembly
# Kawasaki FH680V-AS21

| Ref | Part No. | Qty. | Description |
|---|---|---|---|
| ❸13001 | 13001-7007 | 2 | Piston-Engine |
| ❸13002 | 13002-7001 | 2 | Pin-Piston |
| ❸13008 | 13008-6058 | 2 | Ring-Set-Piston |
| ❸13025 | 13025-7002 | 0 | Ring-Set, Pistonl,0.50 |
| ❸13029 | 13029-7003 | 0 | Piston-Engine L,0.50 |
| ❸13031 | 13031-7023 | 1 | Crankshaft-Comp |
| ❸13251 | 13251-7005 | 2 | Connecting Rod ASM |
| ❸92033 | 92033-7005 | 4 | Ring-Snap |
| ❸92151 | 92151-7017 | 4 | Bolt (6x35) |



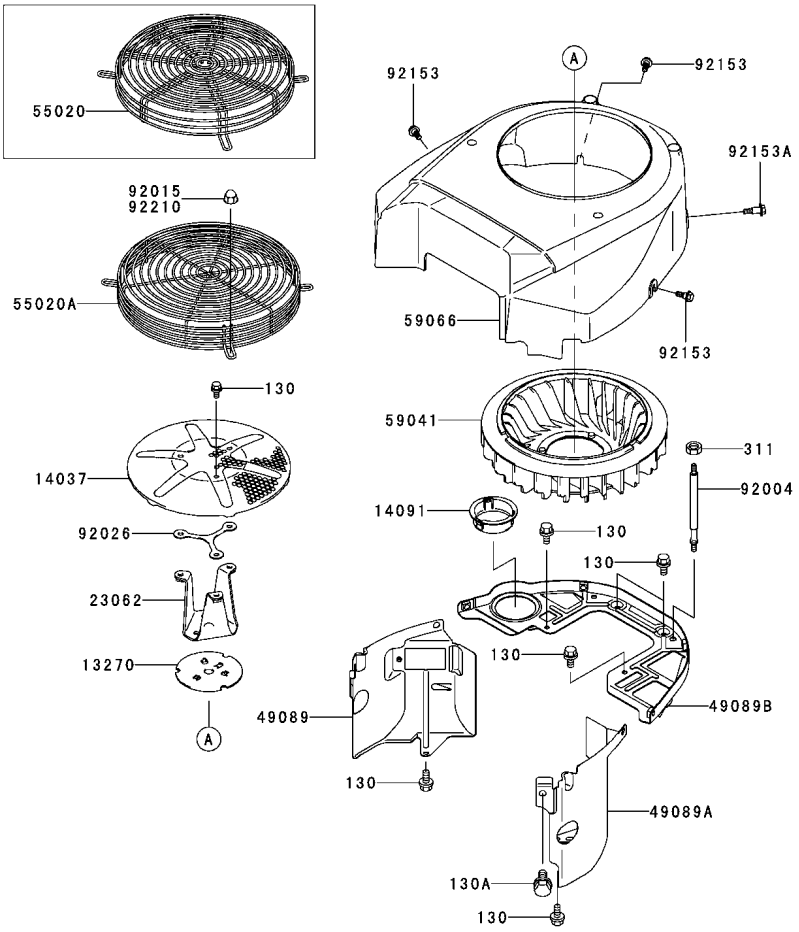

# Valve/Camshaft Assembly
# Kawasaki FH680V-AS21

| Ref | Part No. | Qty. | Description |
|---|---|---|---|
| ❸12004 | 12004-7002 | 2 | Valve-Intake |
| ❸12005 | 12005-7002 | 2 | Valve-Exhaust |
| ❸12009 | 12009-7001 | 4 | Retainer-Spring, Valve |
| ❸12011 | 12011-2056 | 8 | Collet |
| ❸12016 | 12016-7006 | 4 | Arm-Rocker |
| ❸12032 | 12032-7001 | 4 | Tappet |
| ❸13070 | 13070-7004 | 1 | Guide |
| ❸13070A | 13070-7007 | 2 | Guide |
| ❸13116 | 13116-7002 | 4 | Rod-Push |
| ❸13271 | 13270-7007 | 1 | Plate |
| ❸13271A | 13271-7021 | 1 | Plate-Governor |
| ❸42036 | 42036-7001 | 1 | Sleeve |
| ❸49078 | 49078-7002 | 4 | Spring-Engine Valve |
| ❸49118 | 49118-7007 | 1 | Camshaft-Comp |
| ❸92009 | 92009-2341 | 4 | Screw |
| ❸92015 | 92015-2253 | 4 | Nut |
| ❸92033 | 92033-7001 | 2 | Ring-Snap |
| ❸92140 | 92140-7002 | 6 | Ball |
| ❸92145 | 92145-7001 | 1 | Spring |
| ❸92151 | 92151-7019 | 4 | Bolt |
| ❸92200 | 92200-7001 | 1 | Washer |



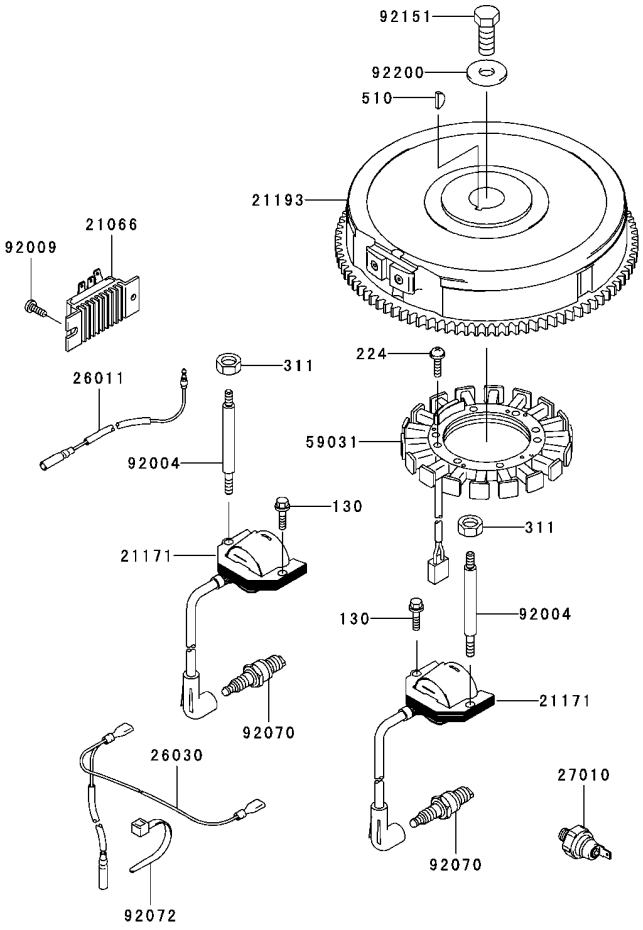

# Lubrication Equipment Assembly
# Kawasaki FH680V-AS21

| Ref | Part No. | Qty. | Description |
|---|---|---|---|
| ❸13107 | 13107-7009 | 1 | Shaft |
| ❸13271 | 13271-7005 | 1 | Plate |
| ❸14075 | 14075-7008 | 1 | Cap-Assy |
| ❸16154 | 16154-2053 | 1 | Rotor-Pump (In) |
| ❸16154A | 16154-2054 | 1 | Rotor-Pump (Out) |
| ❸49065 | 49065-2078 | 1 | Filter-Oil |
| ❸49065A | 49065-7003 | 1 | Filter-Oil |
| ❸59051 | 59051-7011 | 1 | Gear-Spur |
| ❸59231 | 59231-7002 | 1 | Filler |
| ❸92043 | 92043-7006 | 2 | Pin |
| ❸92066 | 92066-7003 | 2 | Plug |
| ❸92140 | 92140-7003 | 1 | Ball |
| ❸92145 | 92145-7002 | 1 | Spring |
| ❸130 | 130B0612 | 3 | Bolt-Flanged |
| ❸670 | 670D2016 | 3 | O-Ring (16mm) |



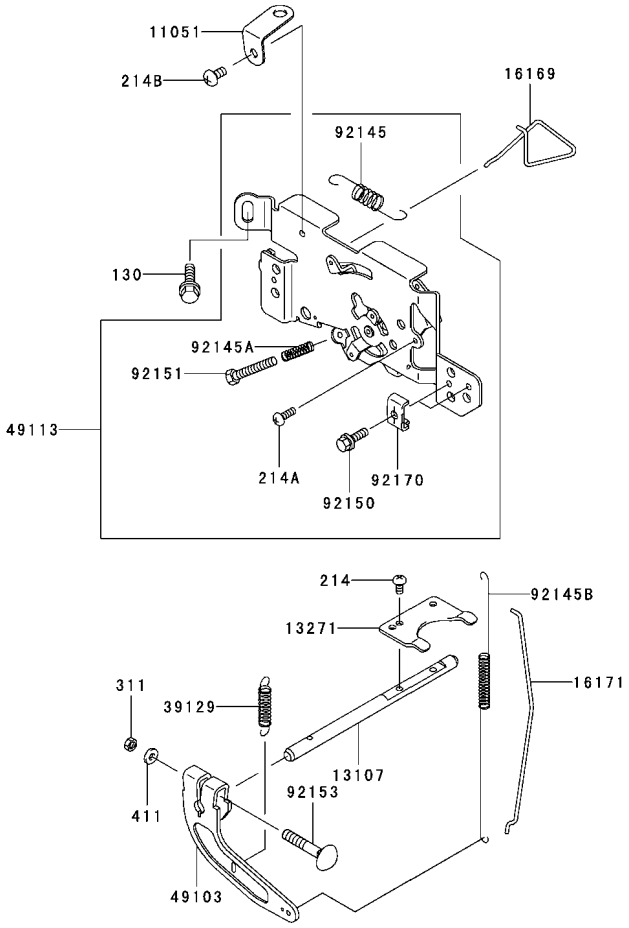

# Cooling Equipment Assembly
# Kawasaki FH680V-AS21

| Ref | Part No. | Qty. | Description |
|---|---|---|---|
| ❸13270 | 13270-7007 | 1 | Plate |
| ❸14037 | 14037-7008-9H | 1 | Screen |
| ❸14091 | 14091-7002 | 1 | Cover |
| ❸23062 | 23062-7005 | 1 | Bracket-Comp |
| ❸49089 | 49089-7004 | 1 | Shroud-Engine |
| ❸49089A | 49089-7005 | 1 | Shroud-Engine |
| ❸49089B | 49089-7030 | 1 | Shroud-Engine |
| ❸55020 | 55020-7002 | 1 | Guard |
| ❸55020A | 55020-7007 | 1 | Guard |
| ❸59041 | 59041-7003 | 1 | Fan |
| ❸59066 | 59066-7004 | 1 | Housing-Fan |
| ❸92004 | 92004-7006 | 2 | Stud |
| ❸92015 | 92015-1170 | 4 | Nut |
| ❸92026 | 92026-7007 | 0 | Spacer |
| ❸92153 | 92153-7007 | 3 | Bolt |
| ❸92153A | 92153-7008 | 1 | Bolt |
| ❸92210 | 92210-0003 | 4 | Nut |
| ❸130 | 130B0612 | 9 | Bolt-Flanged |
| ❸130A | 130B0816 | 1 | Bolt-Flanged |
| ❸311 | 311B0600 | 2 | Nut-Hex |



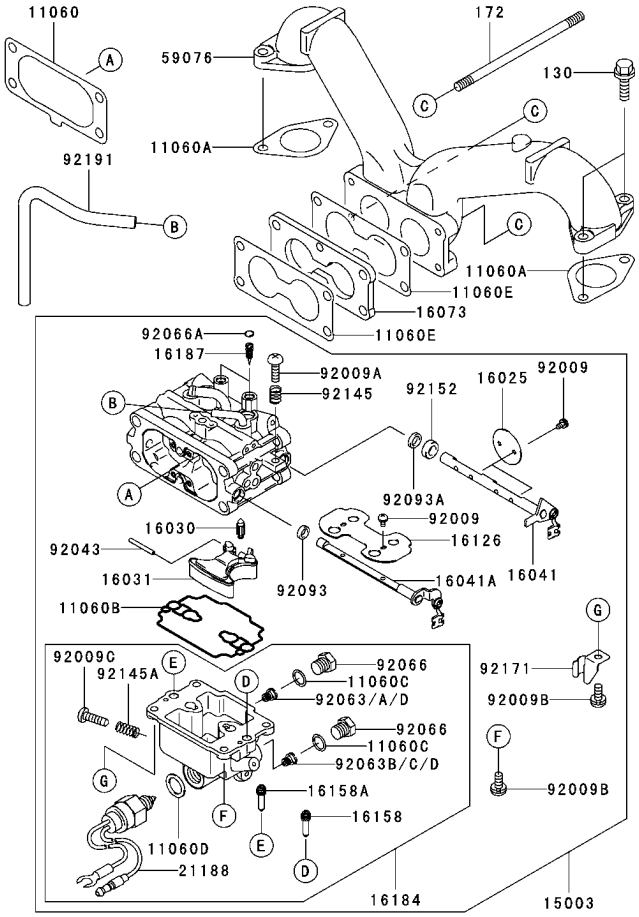

# Electric Equipment Assembly
# Kawasaki FH680V-AS21

| Ref | Part No. | Qty. | Description |
|---|---|---|---|
| ❸21066 | 21066-7006 | 1 | Regulator-Voltage |
| ❸21171 | 21171-7007 | 2 | Coil-ASM-Ignition |
| ❸21193 | 21193-7019 | 1 | Flywheel-Assy |
| ❸26011 | 26011-7008 | 1 | Wire-Lead |
| ❸26030 | 26030-7002 | 1 | Harness |
| ❸27010 | 27010-7001 | 1 | Switch |
| ❸59031 | 59031-7001 | 1 | Coil-Charging |
| ❸92004 | 92004-7009 | 2 | Stud |
| ❸92009 | 92009-2308 | 1 | Screw |
| ❸92070 | 92070-7004 | 2 | Plug-spark,bpr4es(Ngk), Solid |
| ❸92072 | 92072-7003 | 2 | Band |
| ❸92151 | 92151-2097 | 1 | Bolt (12x30) |
| ❸92200 | 92200-7002 | 1 | Washer |
| ❸130 | 130B0620 | 2 | Bolt-Flanged |
| ❸224 | 224B0520 | 4 | Screw-Pan |
| ❸311 | 311B0600 | 2 | Nut-Hex |
| ❸510 | 510A5100 | 1 | Key-Woodruff |




# Control Equipment Assembly
# Kawasaki FH680V-AS21

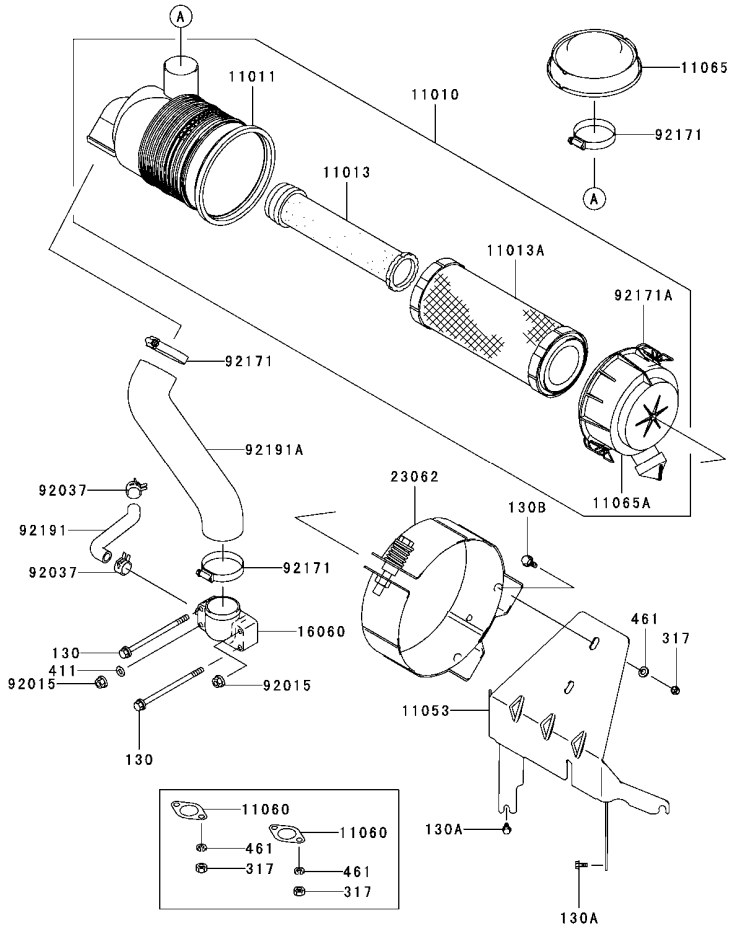
| Ref | Part No. | Qty. | Description |
|---|---|---|---|
| ❸11051 | 11051-7008 | 1 | Bracket |
| ❸13107 | 13107-7013 | 1 | Shaft |
| ❸13271 | 13271-7018 | 1 | Plate |
| ❸16169 | 16169-7006 | 1 | Link-Choke |
| ❸16171 | 16171-7004 | 1 | Link |
| ❸39129 | 39129-7004 | 1 | Spring-Governor |
| ❸49103 | 49103-7004 | 1 | Arm-Governor |
| ❸49113 | 49113-7017 | 1 | Panel-Comp-Control |
| ❸92145 | 92145-7004 | 1 | Spring |
| ❸92145A | 92145-7005 | 1 | Spring |
| ❸92145B | 92145-7009 | 1 | Spring |
| ❸92150 | 92150-2182 | 2 | Bolt (5x18) |
| ❸92151 | 92151-7014 | 1 | Bolt, 5x30 |
| ❸92153 | 92153-7005 | 1 | Bolt,6x35 |
| ❸92170 | 92170-7001 | 2 | Clamp |
| ❸130 | 130B0612 | 2 | Bolt-Flanged |
| ❸214 | 214B0408 | 2 | Screw-Pan |
| ❸214A | 214B0412 | 1 | Screw-Pan |
| ❸214B | 214B0510 | 1 | Screw-Pan |
| ❸311 | 311B0600 | 1 | Nut-Hex |
| ❸411 | 411b0600 | 1 | Washer-Plain |




# Carburetor Assembly
# Kawasaki FH680V-AS21

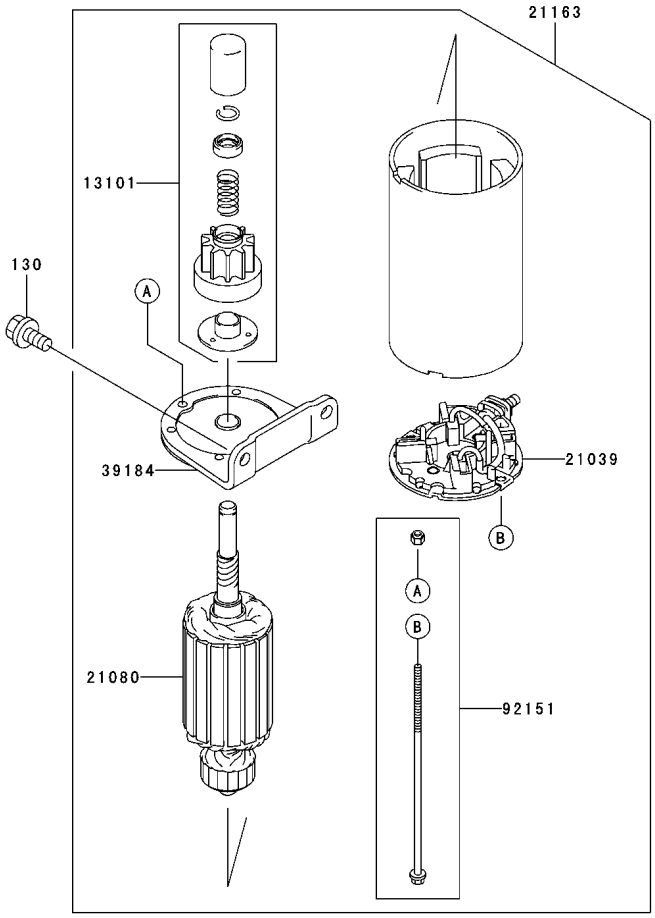
| Ref | Part No. | Qty. | Description |
|---|---|---|---|
| ❸11060 | 11060-7009 | 1 | Gasket, Air Filter |
| ❸11060A | 11060-7011 | 2 | Gasket |
| ❸11060B | 11060-7018 | 1 | Gasket, Float Chamber |
| ❸11060C | 11060-7019 | 2 | Gasket, Main Plug |
| ❸11060D | 11060-7020 | 1 | Gasket, Solenoid |
| ❸11060E | 11060-7024 | 2 | Gasket-Carburetor |
| ❸15003 | 15003-7073 | 1 | Carburetor-Assy |
| ❸16025 | 16025-7003 | 2 | Valve-Throttle |
| ❸16030 | 16030-7002 | 1 | Valve-Float |
| ❸16031 | 16031-7001 | 1 | Float |
| ❸16041 | 16041-7004 | 1 | Shaft-Carburetor Throttle |
| ❸16041A | 16041-7007 | 1 | Shaft-Carburetor, Choke |
| ❸16073 | 16073-7005 | 1 | Insulator |
| ❸16126 | 16126-7004 | 1 | Valve, Choke |
| ❸16158 | 16158-7007 | 1 | Jet-Slow, No.56 |
| ❸16158A | 16158-7008 | 1 | Jet-Slow, No.42 |
| ❸16184 | 16184-7010 | 1 | Chamber-Assy-Float |
| ❸16187 | 16187-7002 | 2 | Needle-Jet |
| ❸21188 | 21188-7001 | 1 | Solenoid |
| ❸59076 | 59076-7002 | 1 | Manifold-Intake |
| ❸92009 | 92009-7003 | 6 | Screw |
| ❸92009A | 92009-7004 | 1 | Screw |
| ❸92009B | 92009-7005 | 4 | Screw |
| ❸92009C | 92009-7006 | 1 | Screw, Drain |

| Ref | Part No. | Qty. | Description |
|---|---|---|---|
| ❸92043 | 92043-7004 | 1 | Pin-Float |
| ❸92063 | 92063-7017 | 1 | Jet-Main, No.133 |
| ❸92063A | 92063-7018 | 1 | Jet-Main, No.130 |
| ❸92063B | 92063-7019 | 1 | Jet-Main, No.139 |
| ❸92063C | 92063-7020 | 1 | Jet-Main, No.134 |
| ❸92063D | 92063-7038 | 2 | Jet-Main, No.114 |
| ❸92066 | 92066-7008 | 2 | Plug, Main Jet |
| ❸92066A | 92066-7009 | 2 | Plug, Extension |
| ❸92093 | 92093-7001 | 1 | Seal |
| ❸92093A | 92093-7002 | 1 | Seal |
| ❸92145 | 92145-7010 | 1 | Spring |
| ❸92145A | 92145-7011 | 1 | Spring |
| ❸92152 | 92152-7001 | 1 | Collar |
| ❸92171 | 92171-7001 | 1 | Clamp |
| ❸92191 | 92191-7023 | 1 | Tube |
| ❸130 | 130B0620 | 4 | Bolt-Flanged |
| ❸172 | 172G06105 | 2 | Bolt-Stud |



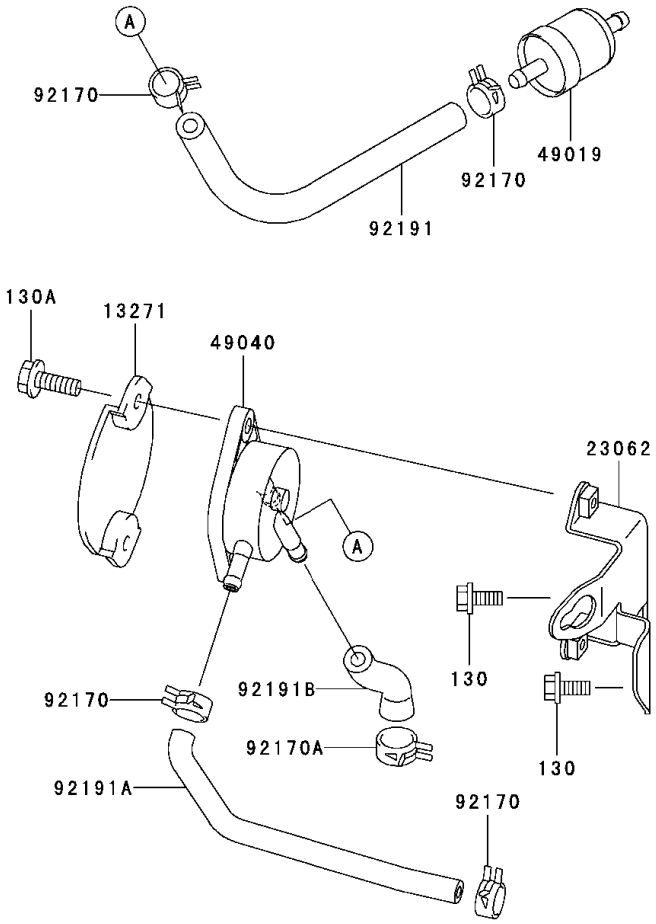

# Air Filter and Muffler Assembly
# Kawasaki FH680V-AS21

| Ref | Part No. | Qty. | Description |
|---|---|---|---|
| ❸11010 | 11010-7004 | 1 | Filter-Assy-Air |
| ❸11011 | 11011-7014 | 1 | Case-Air Filter |
| ❸11013 | 11013-7019 | 1 | Element-Air Filter |
| ❸11013A | 11013-7020 | 1 | Element-Air Filter |
| ❸11060 | 11060-7016 | 2 | Gasket, Muffler |
| ❸11065 | 11065-7006 | 1 | Cap |
| ❸11065A | 11065-7008 | 1 | Cap |
| ❸16060 | 16060-7005 | 1 | Pipe-Intake |
| ❸92015 | 92015-1193 | 2 | Nut |
| ❸92037 | 92037-2079 | 2 | Clamp |
| ❸92171 | 92171-7007 | 3 | Clamp |
| ❸92171A | 92171-7009 | 2 | Clamp |
| ❸92191 | 92191-7006 | 1 | Tube |
| ❸92191A | 92191-7028 | 1 | Tube |
| ❸130 | 130B06105 | 2 | Bolt-Flanged |
| ❸130A | 130B0612 | 2 | Bolt-Flanged |
| ❸130B | 130B0816 | 2 | Bolt-Flanged |
| ❸317 | 317R0800 | 6 | Nut-Hex, Small |
| ❸411 | 411b0600 | 1 | Washer-Plain |
| ❸461 | 461F0800 | 6 | Washer-Spring |




# Starter Assembly Kawasaki FH680V-AS21

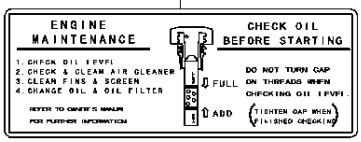
| Ref | Part No. | Qty. | Description |
|---|---|---|---|
| ❸13101 | 13101-7001 | 1 | Gear ASM |
| ❸21039 | 21039-7001 | 1 | Brush |
| ❸21080 | 21080-7001 | 1 | Armature |
| ❸21163 | 21163-7001 | 1 | Starter-Electric |
| ❸39184 | 39184-7001 | 1 | Bracket ASM |
| ❸92151 | 92151-7013 | 1 | Bolt |
| ❸130 | 130B0816 | 2 | Bolt-Flanged |




# Fuel Tank/Fuel Valve Assembly
# Kawasaki FH680V-AS21

| Ref | Part No. | Qty. | Description |
|---|---|---|---|
| ❸13271 | 13271-7004 | 1 | Plate |
| ❸23062 | 23062-7004-9H | 1 | Bracket-Comp |
| ❸49019 | 49019-7001 | 1 | Filter-Fuel |
| ❸49040 | 49040-7001 | 1 | Pump-Fuel |
| ❸92170 | 92170-2088 | 4 | Clamp |
| ❸92170A | 92170-7003 | 1 | Clamp |
| ❸92191 | 92191-7003 | 1 | Tube (6.35x12.7x160) |
| ❸92191A | 92191-7017 | 1 | Tube |
| ❸92191B | 92191-7027 | 1 | Tube |
| ❸130 | 130B0616 | 2 | Bolt-Flanged |
| ❸130A | 130B0620 | 2 | Bolt-Flanged |

56033




56080




# Decal Assembly
# Kawasaki FH680V-AS21

| Ref | Part No. | Qty. | Description |
|---|---|---|---|
| ❸56033 | 56033-7002 | 1 | Label-Manual |
| ❸56080 | 56080-7009 | 1 | Decal-Brand |

# NOTES


TORO®