Form No. 3352–976

Front Blade Kit

Sand Pro®

Model No. 08821—Serial No. 250000001 and Up

Installation Instructions

Loose Parts

Note: Use the chart below to identify parts used for assembly.

Description	Qty.	Use
Blade	1	Assembling the blade and lift arms
Channel	1	
Carriage bolts, 5/16 x 1 inch	4	
Locknuts, 5/16 inch	4	Mounting the lift arms to the blade and channel assembly
Lift arm assembly (left)	1	
Lift arm assembly (right)	1	
Carriage bolts, 5/16 x 1 inch	4	
Locknuts, 5/16 inch	4	
Spacers	4	
Cap screws, 3/8 x 3-3/4 inches	4	
Locknuts, 3/8 inch	4	
Lower handle	1	Mounting the handles to the handle plates
Upper handle	1	
Cap screws, 5/16 x 1-3/4 inches	2	
Cap screws, 5/16 x 2-1/4 inches	2	
Cap screws, 5/16 x 2-3/4 inches	2	
Jam nuts, 5/16 inch	2	
Washers, 1/2 inch	8	
Spacers	4	
Pivot plates	2	Mounting to the foot rest (Sand Pro 14, 2000 and 3000)
Cap screws, 5/16 x 1-3/4 inches	4	
Locknuts	4	
Lift arm mounting bracket (left)	1	Mounting lift arm mounting brackets to the machine (Sand Pro 14, 2000 and 3000)
Lift arm mounting bracket (right)	1	
Mounting blocks	2	
Cap screws	4	
Lift arm mounting bracket (left)	1	Mounting lift arm mounting brackets to the machine (Sand Pro 5000 only)
Lift arm mounting bracket (right)	1	
Cap screws, 1/2 x 1-1/4 inches	4	
Flat washers, 1/2 inch	4	

© 2004 by The Toro Company
8111 Lyndale Avenue South
Bloomington, MN 55420-1196

Contact us at www.Toro.com
All Rights Reserved
Printed in the USA

Description	Qty.	Use
Shoulder bolts	2	Mounting the center of the lift arms to the machine
Thrust washers, 5/8 inch	4	
Flat washers, 3/8 inch	2	
Locknuts, 3/8 inch	2	
Mounting pins	2	Mounting the rear of the lift arms to the machine
Thrust washers	4	
Klic pins	2	
Installation instructions	1	Read before installing and operating the kit

Assembling the Blade and the Lift Arms

1. Using the center holes, assemble the blade to the channel with 4 carriage bolts (5/16 x 1 inch) and 4 locknuts (5/16 inch). Refer to Figure 1.

   Note: The decal on the channel must face upward.

2. Slide the left and right arms into the channel.
3. Secure the arms in place with 4 carriage bolts (5/16 x 1 inch) and 4 locknuts (5/16 inch).
4. Install 4 spacers between the mounting flanges at the front of the lift arms (2 on each side) and secure them in place with 4 cap screws (3/8 x 3-3/4 inch) and locknuts (3/8 inch).

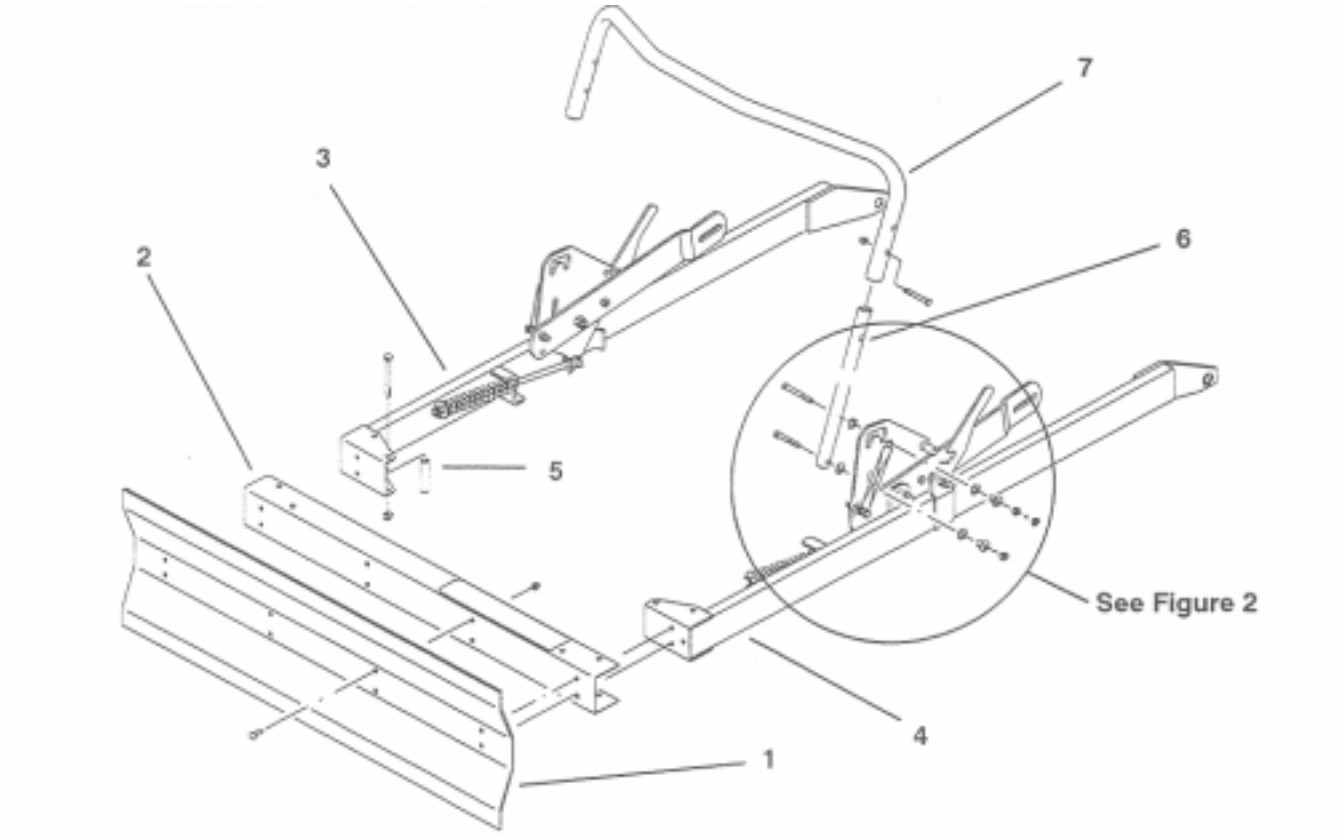

Figure 1

1. Blade
2. Channel
3. Right lift arm
4. Left lift arm
5. Spacer
6. Lower handle
7. Upper handle

Installing the Lower and Upper Handles

1. Install the lower handle on the inside of the handle plate using a cap screw (5/16 x 2-1/4 inch), another cap screw (5/16 x 2-3/4 inch), 4 washers (1/2 inch), 2 spacers, a locknut (5/16 inch), and a jam nut (5/16 inch). Refer to Figure 2.

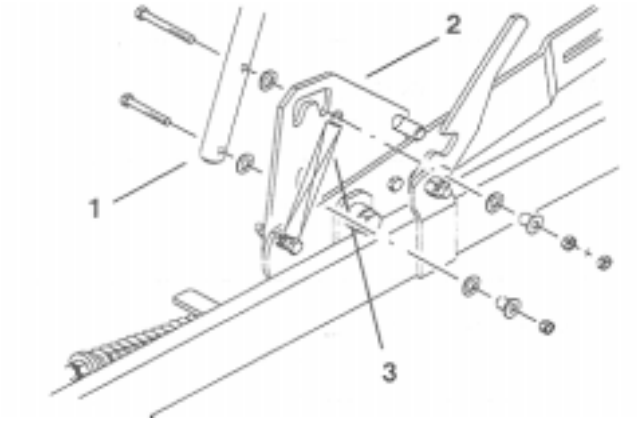

Figure 2

1. Lower handle
2. Handle plate
3. Spring

2. Mount the bottom of the handle with a cap screw (2-1/4 inch.)
3. Hook the spring onto the end of the top cap screw (Fig. 2).
4. Install the locknut (5/16 inch) onto the top cap screw to hold the spring in place.
5. Repeat steps 1 through 4 for the other side.
6. Slide the upper handle onto the lower handles and align the holes.

   Note: Use the lower set of holes in the upper handle when mounting the blade on a Sand Pro 5000; otherwise, use the upper set.

7. Secure the upper handle in place with 2 cap screws (5/16 x 1-3/4 inch) and 2 locknuts (5/16 inch). Refer to Figs. 1 and 2.

Reposition the Front Hydraulic Hoses

Sand Pro 3020 and 5020 only

1. Position the front wheel so that it is straight ahead.
2. Loosen both of the front wheel motor hydraulic hoses (Fig. 3).



Figure 3

3. Loosen the hydraulic fittings in the motor and position them 45° downward from the horizontal plane as shown in figure 3.
4. Tighten the hydraulic fittings.
5. Tighten both of the wheel motor hoses.

   Note: Use a wrench to prevent the hoses from twisting when you tighten them.

Installing the Lift Arm Mounting Brackets

Sand Pro 14, 2000 & 3000 only

1. Remove the refuse container from the left side of the unit.

2. Assemble the left mounting bracket against the wheel motor mount with the threaded mounting block, 2 cap screws (1/2 x 1-1/4 inches), and flat washers (1/2 inch) (Fig. 4).

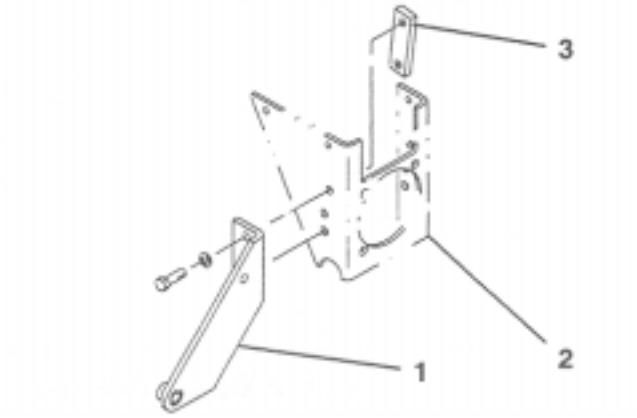

Figure 4

1. Mounting bracket
2. Wheel motor mount
3. Mounting block

Note: Repeat this step to the right mounting bracket on the opposite side.

Note: It is easier to install the lift arm mounting brackets and the mounting blocks if you remove the wheels.

Installing the Lift Arm Mounting Brackets

Sand Pro 5000 only

1. Block up the rear of the machine and remove the rear tires.
2. Secure the left mounting bracket to the front boss and the bottom of the wheel motor mount with 2 cap screws (1/2 x 1-1/2 inch) and lock washers (1/2 inch) (Fig. 5).

   Note: Repeat this step for the right mounting bracket on the opposite side.

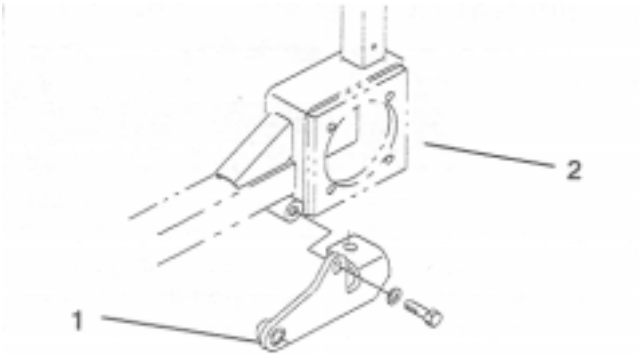

Figure 5

1. Mounting bracket
2. Wheel motor mount

Installing the Pivot Brackets

Sand Pro 14, 2000 & 3000 only

You must drill 2 holes through the floor boards on each side.

1. Refer to the dimensions in Figure 6 to mark, locate, and drill 2 holes (11/32 inch diameter) through the right floor board.

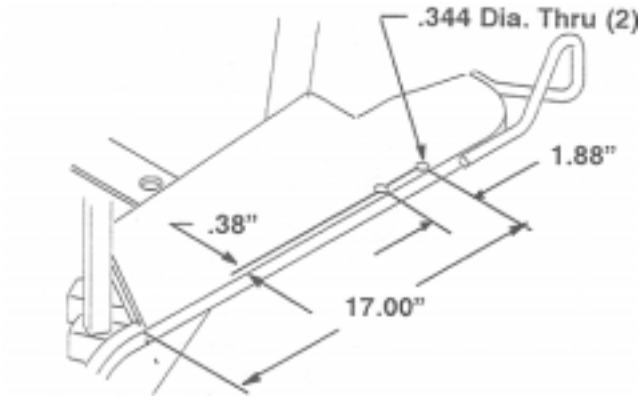

Figure 6

2. Refer to the dimensions in Figure 7 to mark, locate, and drill 2 holes (11/32 inch diameter) through the left floor board.

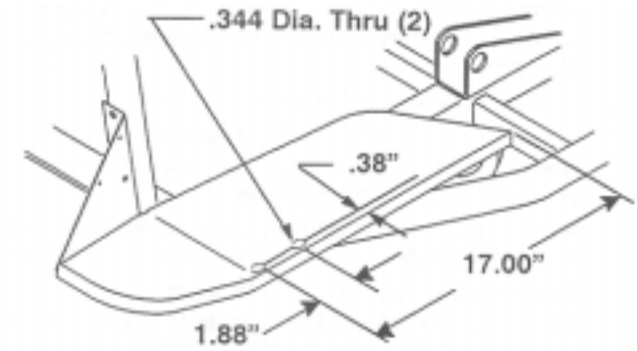

Figure 7

3. Mount the left and right pivot brackets to the floor boards with 4 cap screws (5/16 x 1-1/2 inch) and 4 locknuts (5/16 inch) (Fig. 8).

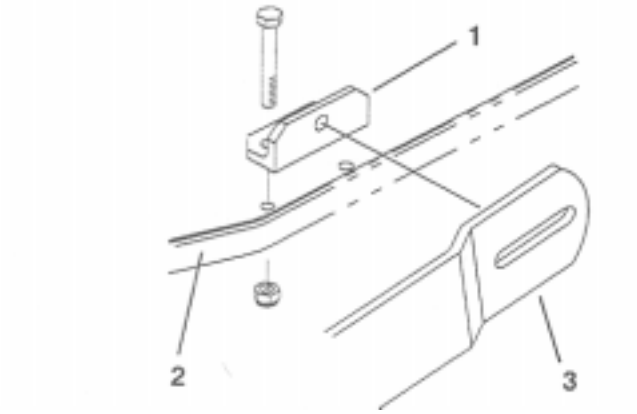

Figure 8

1. Pivot bracket
2. Left floor board
3. Pivot arm

Mounting the Blade and Lift Arm Assembly

1. Slide the blade assembly backward on the machine until the ends of the lift arms are in line with the holes in the mounting brackets.

2. Mount the pivot arm to a pivot bracket on the Sand Pro 2000 or to each side of the floor board on the Sand Pro 5000 with a shoulder bolt, 2 thrust washers, a flat washer, and a locknut as shown in Figs 8 and 9.

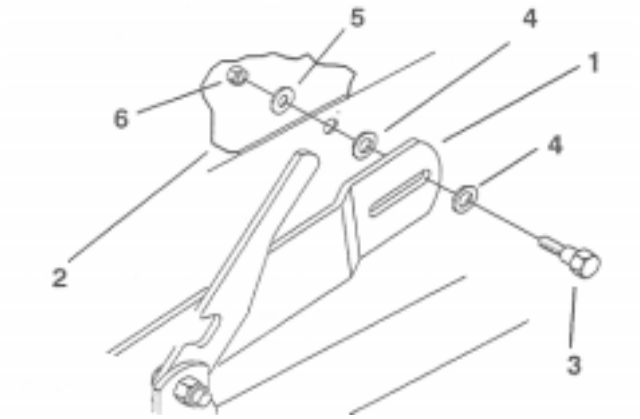

Figure 9

1. Pivot arm
2. Floor arm

Note: Repeat this set on the opposite side.

3. Connect the rear of the lift arm to the mounting bracket with a mounting pin, 2 thrust washers, and a klic pin (Fig. 10).

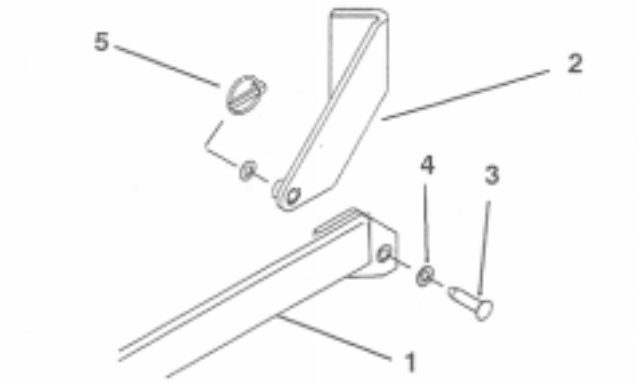

Figure 10

1. Lift arm
2. Bracket
3. Pin
4. Thrust washer
5. klic pin

4. Flip ring over the end of the klic pin so that it does not accidentally fall out.

Note: Repeat this step on the opposite side.

Adjusting the Spring Tension

The spring adjustment controls the force that it takes to raise the blade to the transport position. If the spring is too loose, it will be hard to raise the blade to the transport position. However, too much spring tension causes the blade to float excessively during operation.

1. Lower the blade to the floor.

   Note: When the spring is properly adjusted, the entire length of the bottom of the blade will be no more than 1/4 inch off the floor.

2. Rotate the spring adjusting nuts (Fig. 11) clockwise to the raise the blade; counterclockwise to lower the blade.

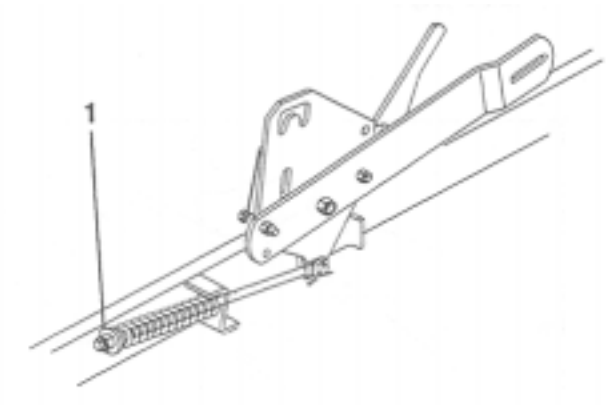

Figure 11

1. Adjusting nut

Removing and Storing the Blade

1. Lower the blade to the floor.
2. Remove the klic pins, thrust washers, and mounting pins that connect the lift arms to the mounting brackets (Fig. 10).
3. Carefully remove the shoulder bolts, 4 thrust washers, flat washers, and a locknut that secures the pivot arm to the pivot brackets or floor boards (Fig. 9).
4. Slide the complete blade assembly away from the machine.

Operating the Front Blade

Caution

If you leave the handle in the rear position while driving with the blade raised, you could accidently hit the handle and be injured.

When you operate the unit with the blade raised, ensure that the handle is in the forward transport position.

1. The handle is tensioned with a spring and moves forward and backward over a cam. You must lift up on the handle to move it over the cam. The forward position is for transport and the rear position is for operating (Fig. 12).

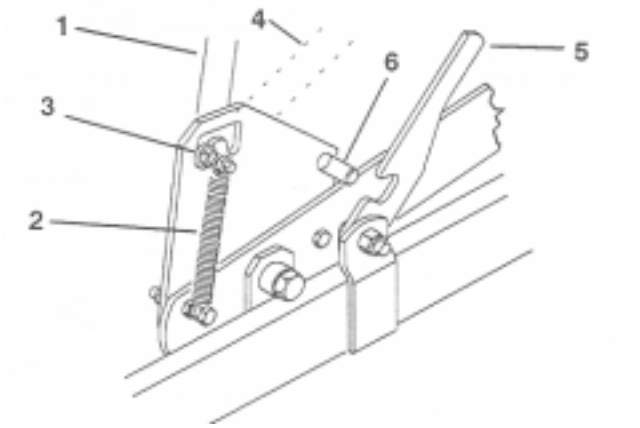

Figure 12

1. Handle
2. Spring
3. Transport position
4. Operating position
5. Transport latch
6. Pivot plate pin

2. Move the handle to the transport position and pull backward to raise the blade. Lock the blade in transport by rotating both transport latches forward until they securely engage the pivot plate pins (Fig. 12).
3. You can use the blade to push or pull sand and dirt. With the handle in the rear position for operating, you simply push forward or pull back slightly to control the plowing action.

   Note: If the wheels spin while plowing, raise the blade slightly by pulling back on the handle. At times the engine may begin to overload. When it does, gradually release the traction pedal to increase the engine speed and power.


TORO®