Form No. 3353–103

TORO®

Reelmaster® 3100–D

Traction Unit

Model No. 03200—250000001 and Up
Model No. 03201—250000001 and Up
Model No. 03220
Model No. 03221

Operator's Manual

CE

English (EN, GB)

Warning

CALIFORNIA

Proposition 65 Warning

Diesel engine exhaust and some of its constituents are known to the State of California to cause cancer, birth defects, and other reproductive harm.

Important The engine in this product is not equipped with a spark arrester muffler. It is a violation of California Public Resource Code Section 4442 to use or operate this engine on any forest-covered, brush-covered, or grass-covered land as defined in CPRC 4126. Other states or federal areas may have similar laws.

Contents

	Page
Introduction	3
Safety	3
Safe Operating Practices	3
Toro Riding Mower Safety	5
Sound Pressure Level	7
Sound Power Level	7
Vibration Level	7
Safety and Instruction Decals	7
Specifications	11
General Specifications	11
Optional Equipment	11
Setup	12
Loose Parts Chart	12
Install Wheels	13
Install Steering Wheel	13
Activate, Charge and Connect Battery	13
Install Seat	14
Check Angle Indicator	15
Install Hood Latch (European Compliance)	15
Install Exhaust Guard (European Compliance)	15
Install ROPS	16
Install Front Lift Arms	16
Mount Carrier Frames To Cutting Units	17
Mount Cutting Units	18
Mount Cutting Unit Drive Motors	19
Adjust Lift Arms	19
Before Operating	21
Check Crankcase Oil	21
Fill Fuel Tank	21
Check Cooling System	22
Checking the Hydraulic System	22
Check Tire Pressure	23
Check Reel To Bedknife Contact	23
Check Torque Of Wheel Nuts	23
Controls	24
Operation	26
Starting/Stopping Engine	26
Bleeding Fuel System	26
Check Operation Of Interlock Switches	27
Towing Traction Unit	27
Operating Characteristics	27
Mowing Techniques	28
After Mowing	29
Selecting Clip Rate (Reel Speed)	29
Standard Control Module (SCM)	30
Lubrication	32
Maintenance	35
Recommended Maintenance Schedule	35
Daily Maintenance Checklist	36
Service Interval Chart	37
Hood Removal	37
General Air Cleaner Maintenance	38
Servicing Air Cleaner	38
Engine Oil and Filter	38
Fuel System	39
Bleeding Air From Injectors	40
Cleaning Engine Cooling System	40
Servicing Engine Belts	41
Adjusting Throttle	41
Changing Hydraulic Fluid	42
Replacing Hydraulic Filter	42
Checking Hydraulic Lines And Hoses	42
Adjusting Traction Drive For Neutral	43
Adjusting Parking Brake	43
Battery Care	44
Battery Storage	44
Fuses	44
Backlapping	44
Electrical Schematic	46
Hydraulic Schematic	47
Storage	48
Traction Unit	48
Engine	48
The Toro General Commercial Products Warranty	52

© 2005 by The Toro Company
8111 Lyndale Avenue South
Bloomington, MN 55420-1196

All Rights Reserved
Printed in the USA

Introduction

Read this manual carefully to learn how to operate and maintain your product properly. The information in this manual can help you and others avoid injury and product damage. Although Toro designs and produces safe products, you are responsible for operating the product properly and safely.

Whenever you need service, genuine Toro parts, or additional information, contact an Authorized Service Dealer or Toro Customer Service and have the model and serial numbers of your product ready.The two numbers are stamped into a plate that is riveted to the frame of mower.

Write the product model and serial numbers in the space below:

Model No. _____

Serial No. _____

This manual identifies potential hazards and has special safety messages that help you and others avoid personal injury and even death. ***Danger***, ***Warning***, and ***Caution*** are signal words used to identify the level of hazard. However, regardless of the hazard, be extremely careful.

Danger signals an extreme hazard that *will* cause serious injury or death if you do not follow the recommended precautions.

Warning signals a hazard that *may* cause serious injury or death if you do not follow the recommended precautions.

Caution signals a hazard that may cause minor or moderate injury if you do not follow the recommended precautions.

This manual uses two other words to highlight information. **Important** calls attention to special mechanical information and **Note:** emphasizes general information worthy of special attention.

Safety

This machine meets or exceeds CEN standard EN 836:1997, ISO standard 5395:1990, and ANSI B71.4-1999 specifications in effect at the time of production when rear tires are filled with calcium chloride and two rear wheel weight kits (Part No. 11–0440) are installed.

Improper use or maintenance by the operator or owner can result in injury. To reduce the potential for injury, comply with these safety instructions and always pay attention to the safety alert ⚠ symbol, which means CAUTION, WARNING, or DANGER—"personal safety instruction." Failure to comply with the instruction may result in personal injury or death.

Safe Operating Practices

The following instructions are from the CEN standard EN 836:1997, ISO standard 5395:1990, and ANSI B71.4-1999.

Training

- Read the operator's manual and other training material carefully. Be familiar with the controls, safety signs, and the proper use of the equipment.
- Never allow children or people unfamiliar with these instructions to use or service the mower. Local regulations may restrict the age of the operator.
- Never mow while people, especially children, or pets are nearby.
- Keep in mind that the operator or user is responsible for accidents or hazards occurring to other people or their property.
- Do not carry passengers.
- All drivers and mechanics should seek and obtain professional and practical instruction. The owner is responsible for training the users. Such instruction should emphasize:
  - the need for care and concentration when working with ride-on machines;
  - The main reasons for loss of control on a slope are:
    - insufficient wheel grip;
    - being driven too fast;
    - inadequate braking;
    - the type of machine is unsuitable for its task;
    - lack of awareness of the effect of ground conditions, especially slopes;
    - incorrect hitching and load distribution.
- The owner/user can prevent and is responsible for accidents or injuries occurring to himself or herself, other people, or property.

Preparation

- While mowing, always wear substantial footwear, long trousers, hard hat, safety glasses, and ear protection. Long hair, loose clothing, or jewelry may get tangled in moving parts. Do not operate the equipment when barefoot or wearing open sandals.

- Thoroughly inspect the area where the equipment is to be used and remove all objects which may be thrown by the machine.
- **Warning**—Fuel is highly flammable. Take the following precautions:
  - Store fuel in containers specifically designed for this purpose.
  - Refuel outdoors only and do not smoke while refuelling.
  - Add fuel before starting the engine. Never remove the cap of the fuel tank or add fuel while the engine is running or when the engine is hot.
  - If fuel is spilled, do not attempt to start the engine but move the machine away from the area of spillage and avoid creating any source of ignition until fuel vapors have dissipated.
  - Replace all fuel tanks and container caps securely.
- Replace faulty silencers/mufflers.
- Evaluate the terrain to determine what accessories and attachments are needed to properly and safely perform the job. Only use accessories and attachments approved by the manufacturer.
- Check that operator's presence controls, safety switches and shields are attached and functioning properly. Do not operate unless they are functioning properly.

Operation

- Do not operate the engine in a confined space where dangerous carbon monoxide fumes can collect.
- Mow only in daylight or in good artificial light.
- Before attempting to start the engine, disengage all blade attachment clutches, shift into neutral, and engage the parking brake.
- Do not use on slopes of more than 25°.
- Remember there is no such thing as a safe slope. Travel on grass slopes requires particular care. To guard against overturning:
  - do not stop or start suddenly when going up or downhill;
  - machine speeds should be kept low on slopes and during tight turns;
  - stay alert for humps and hollows and other hidden hazards;
  - never mow across the face of the slope, unless the mower is designed for this purpose.
- Stay alert for holes in the terrain and other hidden hazards.
- Watch out for traffic when crossing or near roadways.
- Stop the blades rotating before crossing surfaces other than grass.
- When using any attachments, never direct discharge of material toward bystanders nor allow anyone near the machine while in operation.
- Never operate the machine with damaged guards, shields, or without safety protective devices in place. Be sure all interlocks are attached, adjusted properly, and functioning properly.
- Do not change the engine governor settings or overspeed the engine. Operating the engine at excessive speed may increase the hazard of personal injury.
- Before leaving the operator's position:
  - stop on level ground;
  - disengage the power take-off and lower the attachments;
  - change into neutral and set the parking brake;
  - stop the engine and remove the key.
- Disengage drive to attachments when transporting or not in use.
- Stop the engine and disengage drive to attachment
  - before refuelling;
  - before removing the grass catcher/catchers;
  - before making height adjustment unless adjustment can be made from the operator's position.
  - before clearing blockages;
  - before checking, cleaning or working on the mower;
  - after striking a foreign object or if an abnormal vibration occurs. Inspect the mower for damage and make repairs before restarting and operating the equipment.
- Reduce the throttle setting during engine run-out and, if the engine is provided with a shut-off valve, turn the fuel off at the conclusion of mowing.
- Keep hands and feet away from the cutting units.
- Look behind and down before backing up to be sure of a clear path.
- Slow down and use caution when making turns and crossing roads and sidewalks. Stop cylinders/reels if not mowing.
- Do not operate the mower under the influence of alcohol or drugs
- Use care when loading or unloading the machine into a trailer or truck

- Use care when approaching blind corners, shrubs, trees, or other objects that may obscure vision.

Maintenance and Storage

- Keep all nuts, bolts and screws tight to be sure the equipment is in safe working condition.
- Never store the equipment with fuel in the tank inside a building where fumes may reach an open flame or spark.
- Allow the engine to cool before storing in any enclosure.
- To reduce the fire hazard, keep the engine, silencer/muffler, battery compartment and fuel storage area free of grass, leaves, or excessive grease.
- Check the grass catcher frequently for wear or deterioration.
- Keep all parts in good working condition and all hardware and hydraulic fittings tightened. Replace all worn or damaged parts and decals.
- If the fuel tank has to be drained, do this outdoors.
- Be careful during adjustment of the machine to prevent entrapment of the fingers between moving blades and fixed parts of the machine.
- On multi-cylinder/multi-reel machines, take care as rotating one cylinder/reel can cause other cylinders/reels to rotate.
- Disengage drives, lower the cutting units, set parking brake, stop engine and remove key and disconnect spark plug wire. Wait for all movement to stop before adjusting, cleaning or repairing.
- Clean grass and debris from cutting units, drives, silencers/mufflers, and engine to help prevent fires. Clean up oil or fuel spillage.
- Use jack stands to support components when required.
- Carefully release pressure from components with stored energy.
- Disconnect battery and remove spark plug wire before making any repairs. Disconnect the negative terminal first and the positive last. Reconnect positive first and negative last.
- Use care when checking the cylinders/reels. Wear gloves and use caution when servicing them.
- Keep hands and feet away from moving parts. If possible, do not make adjustments with the engine running.
- Charge batteries in an open well ventilated area, away from spark and flames. Unplug charger before connecting or disconnecting from battery. Wear protective clothing and use insulated tools.

Toro Riding Mower Safety

The following list contains safety information specific to Toro products or other safety information that you must know that is not included in the CEN, ISO, or ANSI standard.

This product is capable of amputating hands and feet and throwing objects. Always follow all safety instructions to avoid serious injury or death.

Use of this product for purposes other than its intended use could prove dangerous to user and bystanders.

Warning

Engine exhaust contains carbon monoxide, which is an odorless, deadly poison that can kill you.

Do not run engine indoors or in an enclosed area.

- Be sure to establish your own special procedures and work rules for unusual operating conditions (e.g. slopes to steep for machine operation. **Survey complete mowing site to determine which hills can be safely operated on.** When performing this site survey always use common sense and take into consideration the turf condition and the rollover risk. To determine which hills or slopes may be safely operated on use the inclinometer provided with each machine. To perform a site survey, lay a 4’ two by four on the slope surface and measure the angle of the slope. The 2 by 4 will average the slope but will not take into consideration dips or holes. **THE MAXIMUM SIDE HILL ANGLE SHOULD NOT BE GREATER THAN 25 DEGREES.**
- The Reelmaster 3100 is equipped with an angle indicator, mounted on the steering tube, which indicates the side hill angle the machine is operating on and identifies the recommended maximum limit of 25 degrees. Stay alert for holes in terrain and other hidden hazards which can cause a sudden change in side hill angle.
- Use extreme caution when operating close to sand traps, ditches, creeks, steep hillsides or other hazards. Reduce speed when making sharp turns. Do not turn on hills. Avoid sudden stops and starts. Use reverse pedal for braking. Cutting units must be lowered when going down slopes for steering control.
- Know how to stop the engine quickly.
- Do not operate the machine while wearing tennis shoes or sneakers.
- Wearing safety shoes and long pants is advisable and required by some local ordinances and insurance regulations.
- Handle fuel carefully. Wipe up any spills.

- Check the safety interlock switches daily for proper operation. If a switch should fail, replace the switch before operating the machine. After every two years, replace all four interlock switches in the safety system, whether they are working properly or not.
- Before starting the engine, sit on the seat.
- Using the machine demands attention. To prevent loss of control:
  - Do not drive close to sand traps, ditches, creeks, or other hazards.
  - Reduce speed when making sharp turns. Avoid sudden stops and starts.
  - When near or crossing roads, always yield the right-of-way.
  - Apply the service brakes when going downhill to keep forward speed slow and to maintain control of the machine.
- The grass baskets must be in place during operation of the cylinders/reels or thatchers for maximum safety. Shut the engine off before emptying the baskets.
- Raise the cutting units when driving from one work area to another.
- Do not touch the engine, silencer/muffler, or exhaust pipe while the engine is running or soon after it has stopped because these areas could be hot enough to cause burns.
- If the engine stalls or loses headway and cannot make it to the top of a slope, do not turn the machine around. Always back slowly, straight down the slope.
- When a person or pet appears unexpectedly in or near the mowing area, **stop mowing.** Careless operation, combined with terrain angles, ricochets, or improperly positioned guards can lead to thrown object injuries. Do not resume mowing until the area is cleared.

Maintenance and Storage

- Make sure all hydraulic line connectors are tight and all hydraulic hoses and lines are in good condition before applying pressure to the system.
- Keep your body and hands away from pin hole leaks or nozzles that eject hydraulic fluid under high pressure. Use paper or cardboard, not your hands, to search for leaks. Hydraulic fluid escaping under pressure can have sufficient force to penetrate the skin and cause serious injury. Seek immediate medical attention if fluid is injected into skin.
- Before disconnecting or performing any work on the hydraulic system, all pressure in the system must be relieved by stopping the engine and lowering the cutting units and attachments to the ground.
- Check all fuel lines for tightness and wear on a regular basis. Tighten or repair them as needed.
- If the engine must be running to perform a maintenance adjustment, keep hands, feet, clothing, and any parts of the body away from the cutting units, attachments, and any moving parts, especially the screen at the side of the engine. Keep everyone away.
- To ensure safety and accuracy, have an Authorized Toro Distributor check the maximum engine speed with a tachometer. Maximum governed engine speed should be 2650 RPM.
- If major repairs are ever needed or if assistance is desired, contact an Authorized Toro Distributor.
- Use only Toro-approved attachments and replacement parts. The warranty may be voided if used with unapproved attachments.

Sound Pressure Level

This unit has an equivalent continuous A–weighted sound pressure level at the operator ear of 83 dBA, based on measurements of identical machines per Directive 98/37/EC and amendments.

Sound Power Level

This unit has a guaranteed sound power level of: 105 dBA/1 pW, based on measurements of identical machines per Directive 2000/14/EC and amendments.

Vibration Level

This unit does not exceed a vibration level of 2.5 m/s^2 at the hands based on measurements of identical machines per ISO 5349 procedures.

This unit does not exceed a vibration level of .5 m/s^2 at the posterior based on measurements of identical machines per ISO 2631 procedures.

Safety and Instruction Decals

Safety decals and instructions are easily visible to the operator and are located near any area of potential danger. Replace any decal that is damaged or lost.

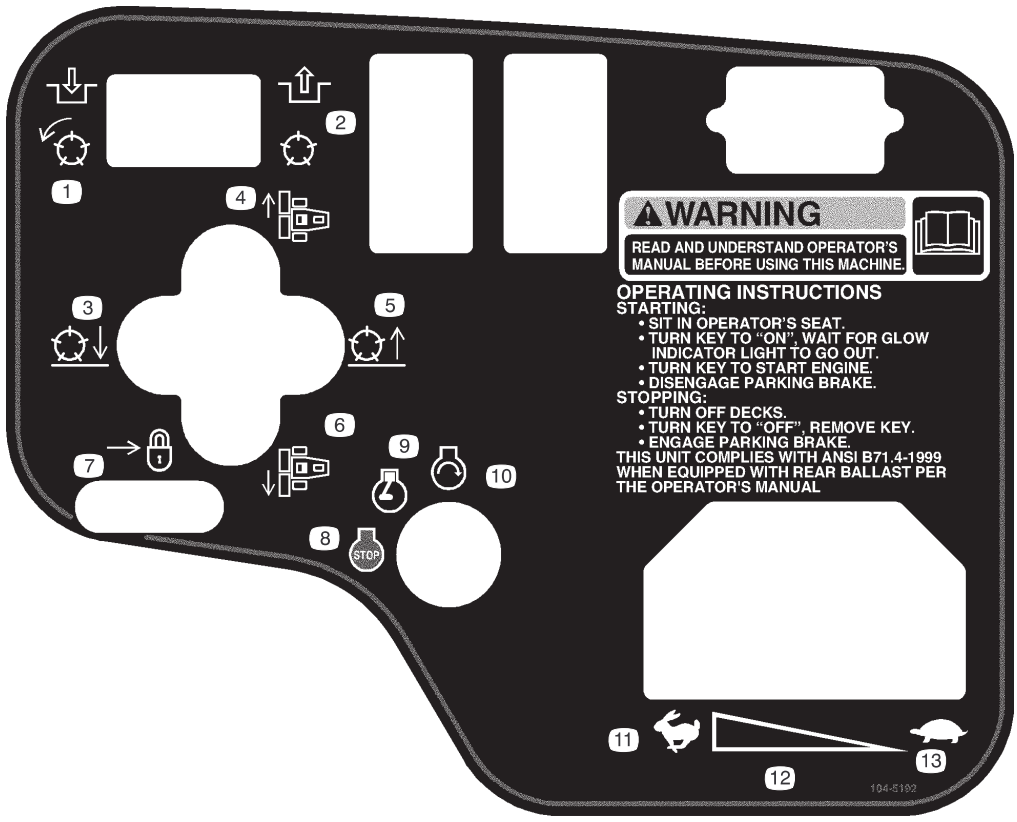

104–5192 for Model 03200

1. Engage the reels.
2. Disengage the reels.
3. Lower the reels.
4. Move the cutting units to the right.
5. Raise the reels.
6. Move the cutting units to the left.
7. Move rear ward to lock the lift lever.
8. Engine—stop
9. Engine—run
10. Engine=start
11. Fast
12. Continuous variable setting
13. Slow

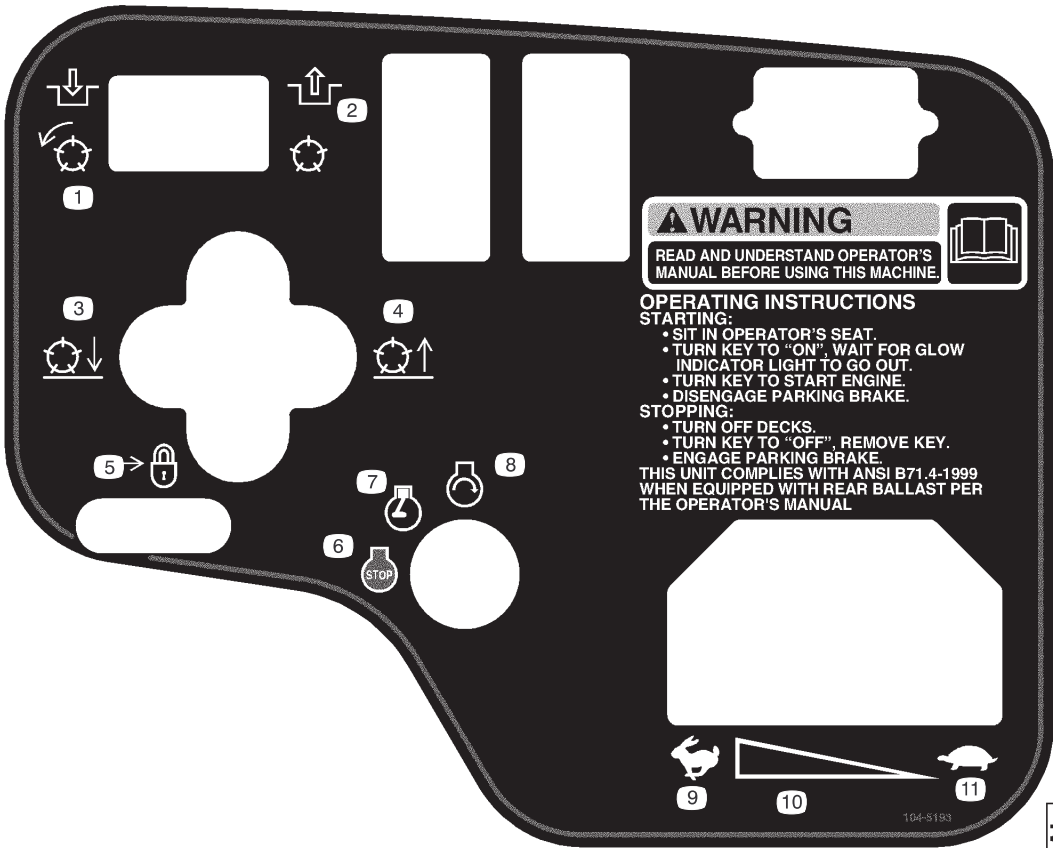

104-5193 for Model 03201

1. Engage the reels.
2. Disengage the reels.
3. Lower the reels.
4. Raise the reels.
5. Move rear ward to lock the lift lever.
6. Engine—stop
7. Engine—run
8. Engine=start
9. Fast
10. Continuous variable setting
11. Slow

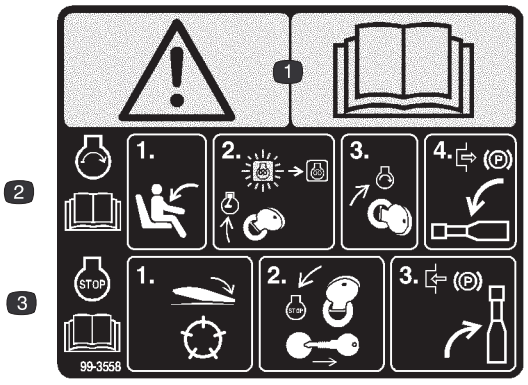

99-3558 for CE

1. Warning—read the *Operator's Manual.*
2. To start the engine, sit on the operator's seat,, turn the key to Run and wait for the engine preheat light to turn off, turn the key to Start, and disengage the parking brake by moving the lever down; read the *Operators Manual.*
3. To stop the engine, press the switch to disengage the reels, turn the key to Stop and remove it, engage the parking brake by pulling the lever up; read the *Operators Manual.*

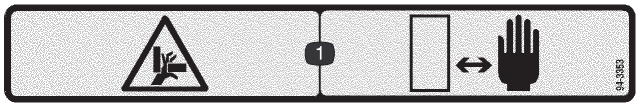

94-3353 for Model 03201 only

1. Crushing hazard of hand—keep your hands a safe distance away.

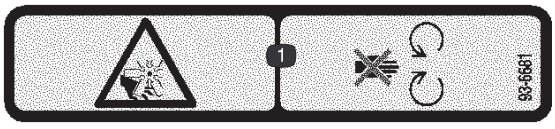

93-6681

1. Cutting/dismemberment hazard, fan—stay away from moving parts.

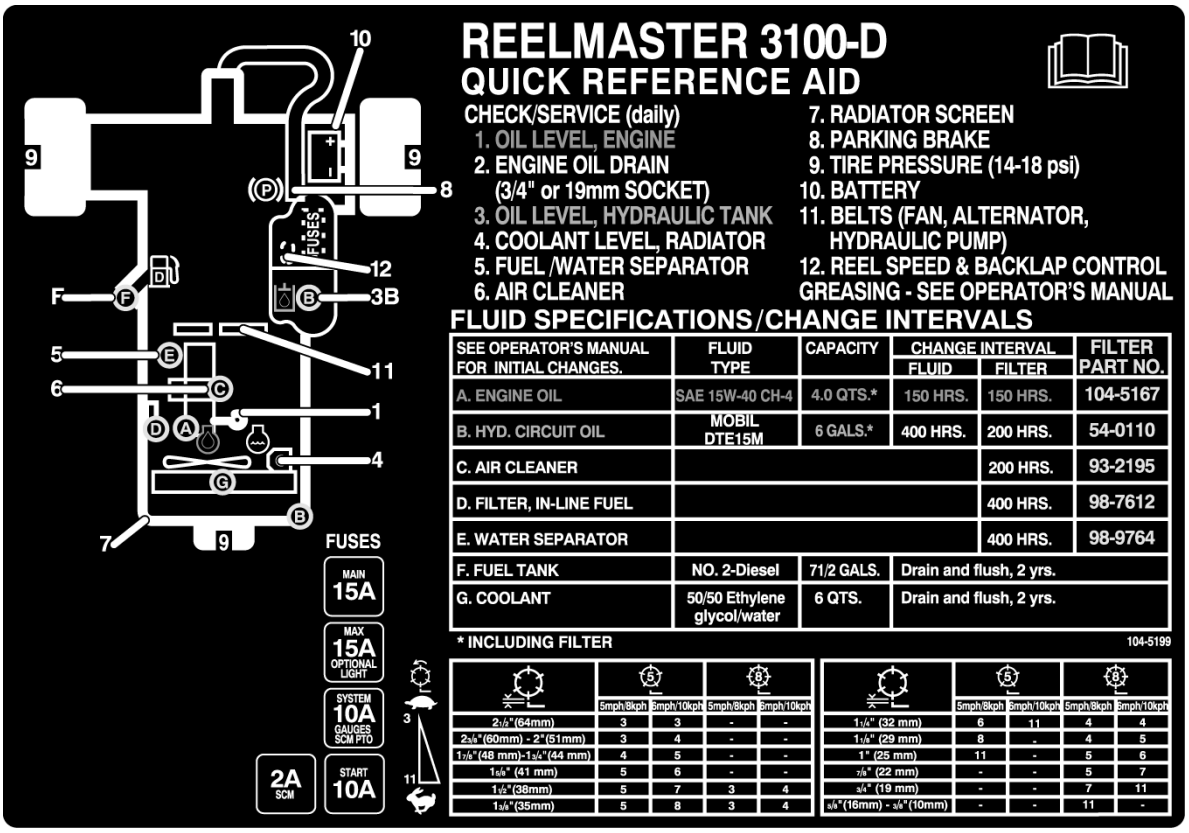

104-5199

⚠ DANGER





FAILURE TO COMPLY WITH THE FOLLOWING SAFETY REQUIREMENTS MAY RESULT IN PERSONAL INJURY OR DEATH. READ & UNDERSTAND OPERATOR'S MANUAL BEFORE OPERATING THIS MACHINE.

ESTA MAQUINA PUEDE SER RIESGOSA SI SE USA EN UNA MANERA INAPROPRIADA. OPERADORES DEBEN ESTAR MUY BIEN ENTRENADOS EN LA MANERA APROPRIADA DE OPERAR LA MAQUINA.

- **THIS TRIPLEX MOWER HAS A UNIQUE DRIVE SYSTEM FOR SUPERIOR TRACTION ON HILLS.**
- **UPHILL WHEEL WILL NOT SPIN OUT AND LIMIT TRACTION LIKE CONVENTIONAL TRIPLEXES.**
- **IF OPERATED ON A SIDE HILL THAT IS TOO STEEP, ROLLOVER WILL OCCUR BEFORE LOSING TRACTION.**

- USE EXTREME CAUTION ON HILLS, SLOPES, AND ROUGH TERRAIN.
  - DO NOT OPERATE ON ANY SIDEHILL UNTIL YOUR SUPERVISOR HAS COMPLETED A SITE SURVEY AS OUTLINED IN THE OPERATOR'S MANUAL.
  - ALWAYS FASTEN YOUR SEAT BELT.
  - WHEN POSSIBLE, MOW UP AND DOWN A HILL, RATHER THAN ACROSS IT. DO NOT TURN ON HILLS.
  - OPERATOR MUST BE SKILLED AND TRAINED IN SLOPE OPERATION.
  - AVOID SUDDEN STARTS, STOPS, HOLES, DROP OFFS, OR HIDDEN HAZARDS IN TERRAIN.
  - AVOID WET OR LOOSE TURF CONDITIONS THAT MAY CAUSE THE MACHINE TO SLIDE.
  - CUTTING UNITS MUST BE LOWERED WHEN GOING DOWN SLOPES FOR STEERING CONTROL.
  - ON SIDEHILLS, SHIFT CUTTING UNITS UPHILL (IF SO EQUIPPED).
- FOR BRAKING, MOVE TRACTION PEDAL TO NEUTRAL OR DIRECTION OPPOSITE TRAVEL DIRECTION.
- KEEP PEOPLE AND PETS AWAY FROM MACHINE.
- KEEP ALL GUARDS IN PLACE.
- STOP ENGINE BEFORE ADDING FUEL OR SERVICING MACHINE.
- BEFORE LEAVING OPERATOR'S POSITION: – SET PARKING BRAKE, TURN OFF ENGINE AND REMOVE KEY.
- CHECK OPERATION OF ALL INTERLOCKS AND BRAKES DAILY.
- BEFORE BACKLAPPING, SEE OPERATOR'S MANUAL FOR INSTRUCTIONS.

99-3496

99-3496

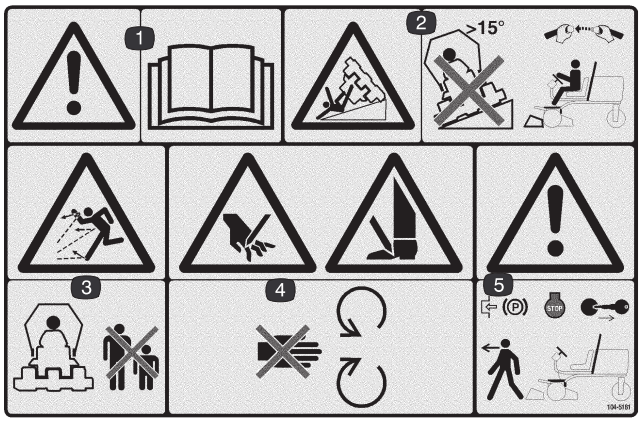

104-5181 for CE

1. Warning—read the *Operator's Manual.*
2. Tipping hazard—do not drive on slopes greater than 15 degrees and always wear the seat belt with ROPS.
3. Thrown object hazard—keep bystanders a safe distance from the machine.
4. Cutting hazard of hand or foot—stay away from moving parts.
5. Warning—lock the parking brake, stop the engine, and remove the ignition key before leaving the machine.



100-4837

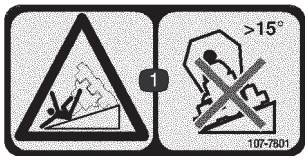

107-7801 for CE

1. Tipping hazard—do not drive on slopes greater than 15 degrees.



Battery Symbols

Some or all of these symbols are on your battery.

1. Explosion hazard
2. No fire, open flames, or smoking.
3. Caustic liquid/chemical burn hazard
4. Wear eye protection
5. Read the *Operator's Manual.*
6. Keep bystanders a safe distance from the battery.
7. Wear eye protection; explosive gases can cause blindness and other injuries
8. Battery acid can cause blindness or severe burns.
9. Flush eyes immediately with water and get medical help fast.
10. Contains lead; do not discard.

Specifications

Note: Specifications and design subject to change without notice.

General Specifications

Engine	Kubota three cylinder, 4 cycle liquid cooled diesel engine. 21.5 hp @ 2500 rpm Governed to 2650 rpm. 68.5 cu. in. (1124 cc) displacement. Heavy duty, 2-stage, remote mounted air cleaner. High water temperature shutdown switch.
Cooling System	Radiator capacity is approximately 6 qts. of 50/50 mixture of ethylene glycol anti–freeze. Remote mounted 1 qt. expansion tank.
Electrical	12 volt Group 55, 450 cold cranking amps at 0°F (–18°C), 75 minute reserve capacity at 80°F (27°C). 40 amp alternator with regulator/rectifier. Seat switch, PTO, parking brake and traction interlock switches.
Fuel Capacity	7.5 gallons.
Traction Drive	High torque hydraulic wheel motors. 3–wheel drive. Oil cooler and shuttle valve provide positive closed–loop cooling.
Hydraulic System	Remote mounted, 3.5 gallon oil reservoir. 10 micron remote mounted spin on filter.
Ground Speed	Infinitely variable speed selection in forward and reverse Mowing speed: 0–6 mph (adjustable) Transport speed: 0–9 mph Reverse speed: 0–3.5 mph
Tires/Wheels	Front tires are 20 x 12–10 tubeless tires and rear tires are 20 x 10–10 tubeless. All have 4–ply rating with demountable rims. Recommended tire pressure: 14–18 psi front and rear tires.
Frame	Tricycle vehicle with 3–wheel traction drive and rear wheel steering. Frame consists of formed steel, welded steel and steel tubing components.
Steering	Power steering.
Brakes	Service braking accomplished through dynamic characteristics of Hydrostat. Parking or emergency brake is actuated by ratchet hand lever on the operator's right hand side.
Controls	Foot operated forward and reverse traction pedals and Mow/Transport slide. Hand operated throttle, ignition switch, reel engagement switch, reel unit lift and shift lever, parking brake and seat adjustment. Shift lever only on Model 03201.
Gauges & Protective Systems	Hour meter. 4 light warning cluster gauge: oil pressure, water temperature, amps, glow plug and side hill angle indicator.
Seat	Optional standard or deluxe seats.
Cutting Unit Lift	Hydraulic lift with automatic reel shut off.

Optional Equipment

Standard Seat	Model No. 03224

Setup

Note: Determine the left and right sides of the machine from the normal operating position.

Loose Parts Chart

Note: Use this chart as a checklist to ensure all parts necessary for assembly have been shipped. If any of these parts are missing, total setup cannot be completed.

Description	Qty.	Use
Wheel assembly	3	Mount to wheel hubs
Steering wheel Jam nut Cover Screw	1 1 1 1	Mount to steering shaft
Hood lock bracket Screw 1/4–20 x 1–1/2” lg. Flat washer 1/4–20 Lock nut 1/4–20	1 1 1 1	Mount to hood for European Compliance
Exhaust guard Self tapping screw	1 4	Mount to machine for European Compliance
Hose clamp	1	Secure vent hose to vent tube of ROPS
Lift arms Pivot rod Capscrews 5/16–18 x 7/8” lg.	2 2 2	Install pivot rods to lift arms (supplied with Lift Arm Kit)
Thrust washers Lynch pin	2 2	Mount cutting units to lift arms (supplied with Lift Arm Kit)
Key	2	
Inclinometer	1	Use for site survey before operating machine
EEC Decal EEC Certificate	4 2	Affix to machine for European Compliance
Operator’s manual	2	Read before operating the machine.
Engine operator’s manual	1	Read before operating the machine.
Parts catalog	1	
Operator video	1	View before operating the machine
Pre–delivery check list	1	

Note: Specifications and design subject to change without notice.

Install Wheels

1. Mount a wheel assembly onto each wheel hub (valve stem outward).

Important Rear tire has a narrower rim than front tires.

2. Install lug nuts and torque to 45–65 ft–Ib.

Install Steering Wheel

1. Slide steering wheel onto steering shaft.

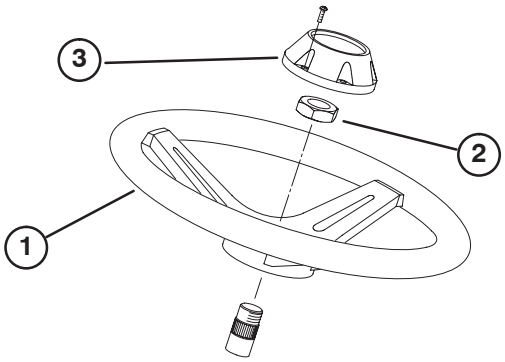

Figure 1

1. Steering wheel
2. Jam nut
3. Cap

2. Secure steering wheel to shaft with jam nut and tighten it to 25 ft-lb.
3. Install cap to steering wheel with screw.

Activate, Charge and Connect Battery

Warning

CALIFORNIA

Proposition 65 Warning

Battery posts, terminals, and related accessories contain lead and lead compounds, chemicals known to the State of California to cause cancer and reproductive harm. ***Wash hands after handling.***

1. Open hood.
2. Remove battery cover.
3. If Battery is not filled with electrolyte or activated, bulk electrolyte with 1.260 specific gravity must be purchased from a local battery supply outlet and added to battery.
4. Remove filler caps from battery and slowly fill each cell until electrolyte is just above the plates.

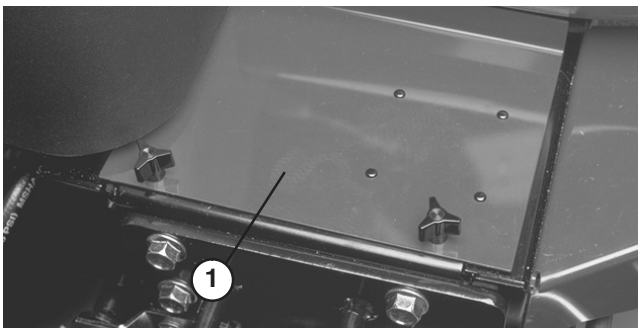

Figure 2

1. Battery cover

5. Replace filler caps and connect a 3 to 4 amp battery charger to the battery posts. Charge the battery at a rate of 3 to 4 amperes for 4 to 8 hours.

Caution

Wear safety goggles and rubber gloves when working with electrolyte. Charge the battery in a well ventilated place so gasses produced while charging can dissipate. Since the gases are explosive, keep open flames and electrical spark away from the battery; do not smoke. Nausea may result if the gases are inhaled. Unplug charger from electrical outlet before connecting to or disconnecting charger leads from battery posts.

6. When battery is charged, disconnect charger from electrical outlet and battery posts.
7. Remove filler caps. Slowly add electrolyte to each cell until level is up to fill ring. Install filler caps.

Important **Do not overfill battery. Electrolyte will overflow onto other parts of the machine and severe corrosion and deterioration will result.**

8. Install the positive cable (red) to the positive (+) terminal and the negative cable (black) to the negative (—) terminal of the battery and secure with capscrews and nuts. Make sure positive (+) terminal is all the way onto post and cable is positioned snug to battery. Cable

must not contact battery cover. Slide the rubber boot over the positive terminal to prevent possible short–out from occurring.

Warning

- **Connecting cables to the wrong post could damage the electrical system and result in personal injury.**

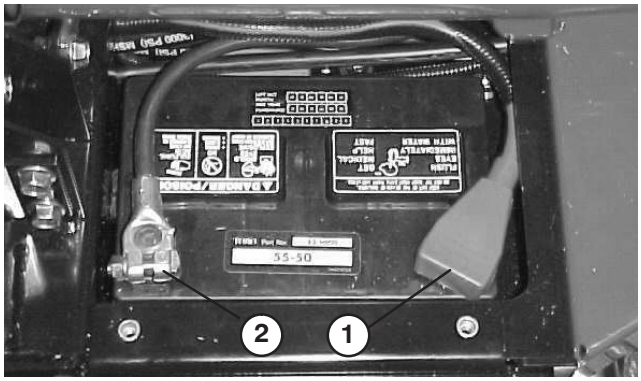

Figure 3

1. Positive (+) battery cable
2. Negative (–) battery cable

Important If battery is ever removed, make sure battery clamp bolts are reinstalled with bolt heads positioned on bottom side and nuts on top side. If clamp bolts are reversed, they may interfere with hard lines when shifting cutting units.

9. Coat both battery connections with Grafo 112X (skin over) grease, Toro Part No. 505–47, petroleum jelly or light grease to prevent corrosion and slide rubber boot over positive terminal.

10. Install battery cover.

Install Seat

The Reelmaster 3100 is shipped without the seat assembly. A Standard Seat Kit, Model 03224, must be installed as follows:

1. Remove capscrews securing seat mounting straps to traction unit frame (Fig. 4).

2. Secure seat mounting straps to seat adjusters with (4) flange nuts (standard seat) or (4) capscrews, flat washers and flange nuts (deluxe seat). Mounting fasteners supplied with seat kit loose parts.

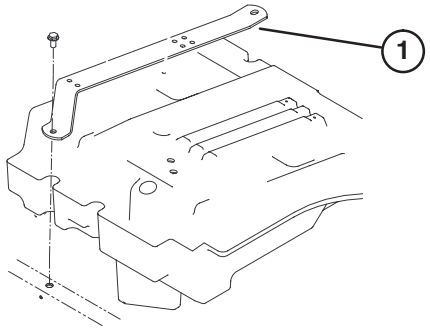

Figure 4

1. Seat mounting strap (2)

3. Install seat belt to holes on each side of seat with (2) bolts and lockwashers (standard seat) or (2) bolts and locknuts (deluxe seat). All mounting fasteners supplied with seat kit loose parts.

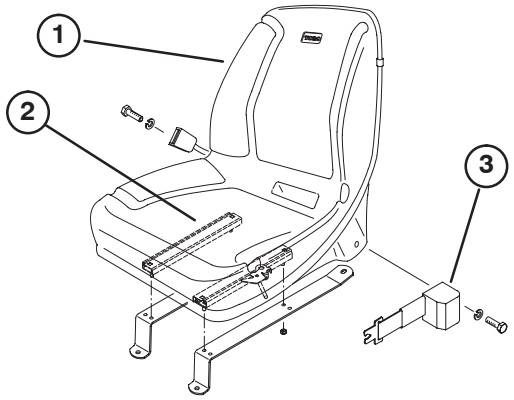

Figure 5

1. Standard seat
2. Seat adjusters
3. Seat belt

4. Position seat and seat straps on frame aligning mounting holes.

5. Route seat switch wire under right hand seat strap and connect to appropriate seat switch connector on harness.

6. Slide the seat all the way forward, pull wire to the right so unused connector is positioned as shown in figure 6 and secure seat switch wire to rear most hole in seat strap with a cable tie (cable tie supplied with seat kit).

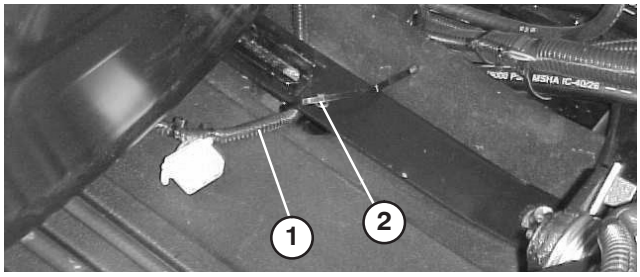

Figure 6

1. Seat switch wire
2. Cable tie

7. Mount seat straps to frame with fasteners previously removed.

8. Slide seat completely forward and backward to ensure proper operation and that seat switch wires and connectors are not pinched or do not contact any moving parts.

Check Angle Indicator

Danger

To reduce risk of injury or death due to rollover do not operate on side hills steeper than 25°.

1. Park machine on a flat, level surface.

2. Verify that the machine is level by placing a hand held inclinometer (supplied with machine) on the frame cross rail, by the tool box. The inclinometer should read zero degrees, when viewed from the operator's position.

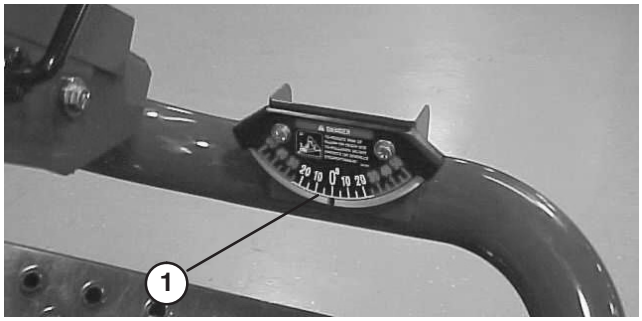

Figure 7

1. Angle indicator

3. If inclinometer does not read zero degrees, move the machine to a location where a zero degree reading is obtained. The angle indicator, mounted on machine, should now read zero degrees as well.

4. If angle indicator does not read zero degrees, loosen the two screws and nuts securing angle indicator to mounting bracket, adjust indicator to obtain a zero degree reading and tighten capscrews.

Install Hood Latch

(European Compliance)

1. Unhook hood latch from bracket.

2. Slide hood lock bracket onto latch.

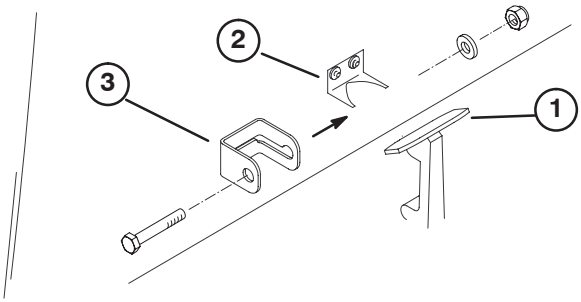

Figure 8

1. Hood latch
2. Hood latch bracket
3. Hood lock bracket

3. Re–hook latch onto bracket.

4. Insert 1/4–20 x 1–1/2" lg. capscrew thru hood lock bracket and secure with a capscrew, flat washer and locknut.

Install Exhaust Guard

(European Compliance)

1. Position exhaust guard around muffler while aligning mounting holes with holes in frame.

2. Secure exhaust guard to frame with (4) self tapping screws.

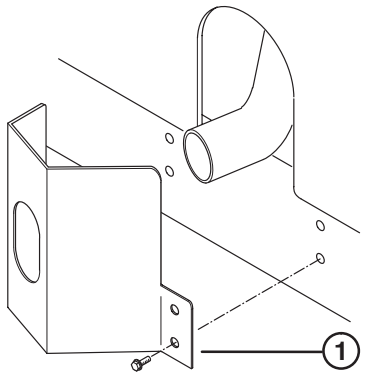

Figure 9

1. Exhaust guard

Install ROPS

Important Never weld or modify ROPS. Replace a damaged ROPS, do not repair or revise. Any alteration of ROPS must be approved by manufacturer.

1. Lower ROPS frame onto traction unit mounting brackets, aligning mounting holes. Vent tube, secured to ROPS, must be positioned on left side of machine.
2. Secure each side of roll bar to mounting brackets with (2) flange head capscrews and locknuts (Fig. 10). Torque fasteners to 60 ft–lbs.
3. Secure fuel line vent hose to vent tube on ROPS with hose clamp.

Caution

Fuel line vent hose must be connected to vent tube prior to starting engine or fuel will flow from hose.

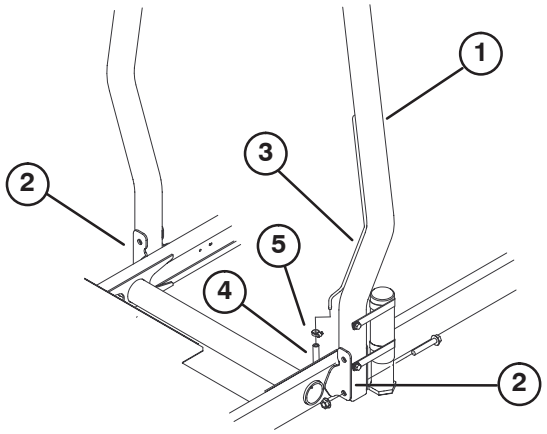

Figure 10

1. ROPS
2. Mounting bracket
3. Vent tube
4. Fuel line vent tube hose
5. Hose clamp

Install Front Lift Arms

1. Remove (2) capscrews securing lift arm pivot shaft link to lift arm pivot shafts. Remove and retain pivot shaft link and capscrews (Fig. 11).

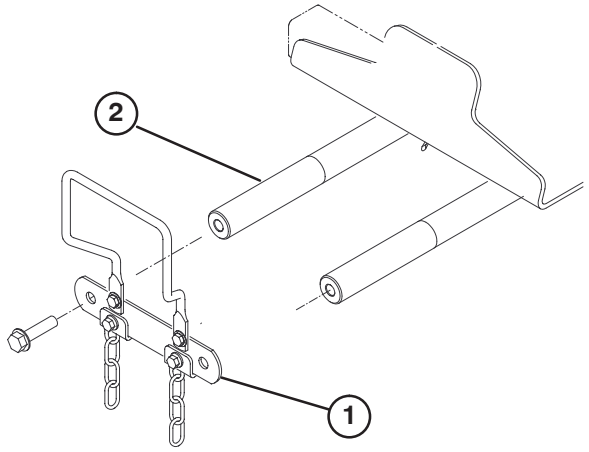

Figure 11

1. Lift arm pivot shaft link
2. Lift arm pivot shaft

2. Insert a pivot rod into each (R.H. & L.H.) lift arm and align mounting holes (Fig. 12).

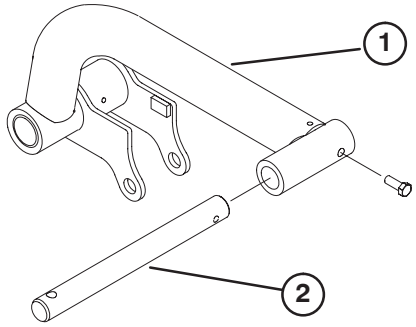

Figure 12

1. Lift arm
2. Pivot rod

3. Secure pivot rods to lift arms with a 5/16 – 18 x 7/8” lg. capscrew.
4. Insert R.H. & L.H. lift arms onto lift arm pivot shafts. Secure with lift arm pivot shaft link and capscrews previously removed. Torque capscrews to 70 ft–lbs.
5. Remove rear retaining rings securing mounting pins to each end of lift cylinder.

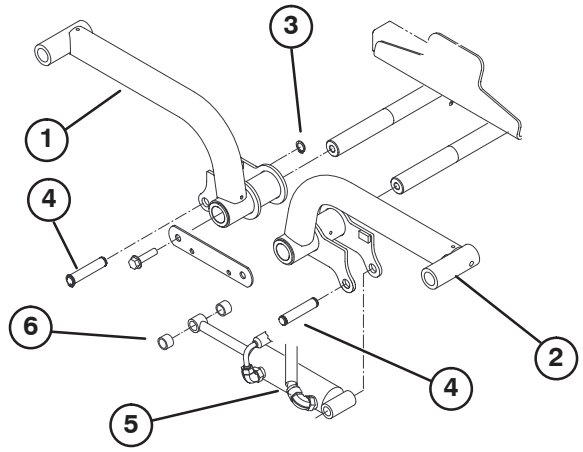

Figure 13

1. Lift arm (R.H.)
2. Lift arm (L.H.)
3. Retaining ring
4. Mounting pin
5. Lift cylinder
6. Spacer (2)

6. Secure right end of lift cylinder to right lift arm with pin and (2) spacers. Secure with retaining ring.

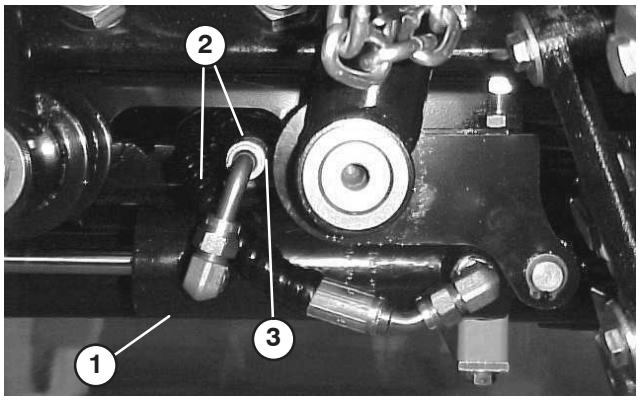

Figure 14

1. Lift cylinder
2. Hoses
3. Clearance here

7. Secure left end of lift cylinder to left lift arm with pin. Secure with retaining ring.

Note: With lift arms fully raised, hoses should be routed as shown in figure 17 and clear lift arm by .04–.12”.

Mount Carrier Frames To Cutting Units

1. Remove cutting units from cartons. Adjust per Cutting Unit Operator’s Manual.

2. Position a front carrier frame (Fig. 15) onto each front cutting unit. Align mounting holes with mounting links as shown in figure 17.

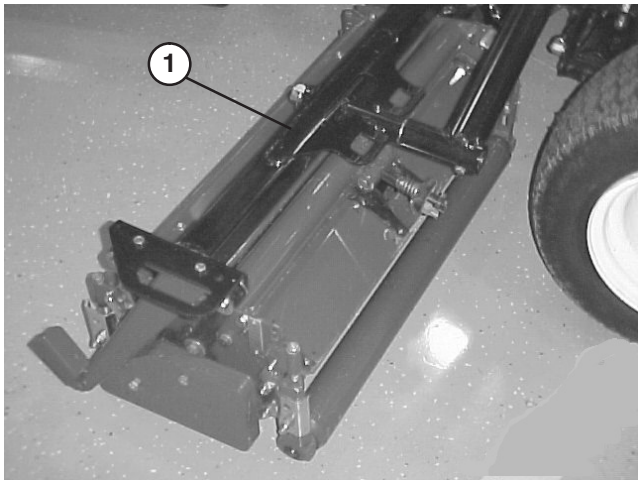

Figure 15

1. Front carrier frame

3. Position rear carrier frame (Fig. 16) onto rear cutting unit, aligning mounting holes with mounting links as shown in figure 17.

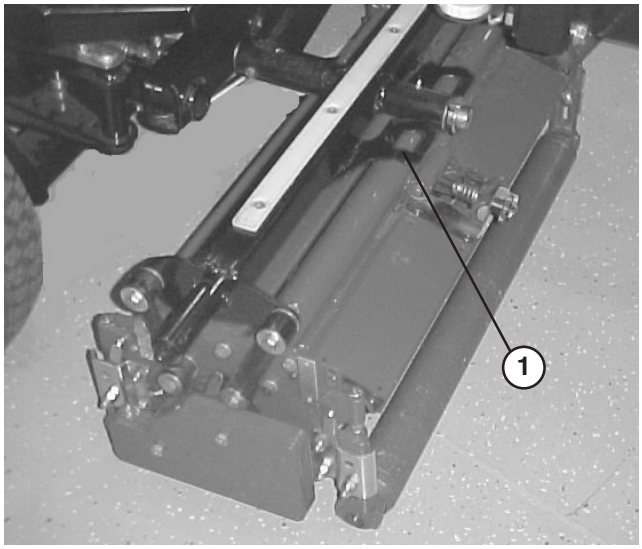

Figure 16

1. Rear carrier frame

4. Secure each mounting link to carrier frame with a 3/8–16 x 2–1/4” lg capscrew, (2) flatwashers and a locknut, as shown in figure 17. Position a washer on each side of link when mounting. Torque to 31 ft–lb.

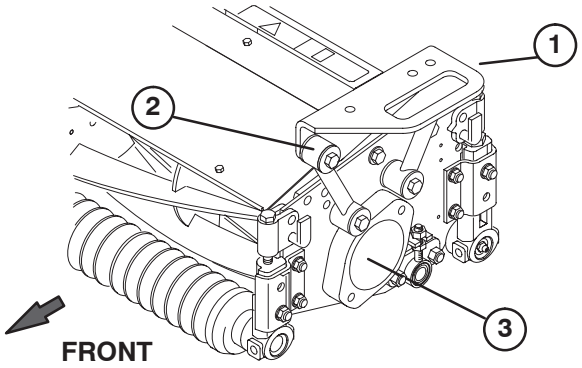

Figure 17

1. Carrier frame
2. Mounting link
3. Plug

Mount Cutting Units

1. Slide a thrust washer onto each front lift arm pivot rod.

2. Slide cutting unit carrier frame onto pivot rod and secure with a lynch pin (Fig. 18).

Note: On rear cutting unit, thrust washer to be positioned between rear of carrier frame and lynch pin.

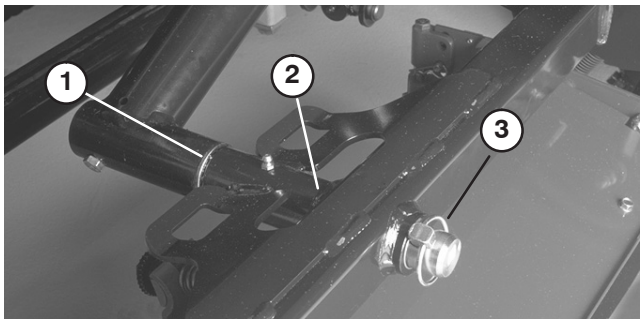

Figure 18

1. Thrust washer
2. Carrier frame
3. Lynch pin

3. Grease all lift arm and carrier frame pivot points.

Important **Make sure hoses are free of twists or sharp bends and rear cutting unit hoses are routed as shown in Fig. 19. Raise cutting units and shift them to the left (Model 03201 only). Rear cutting unit hoses must not contact traction cable bracket. Re–position fittings and / or hoses, if required.**

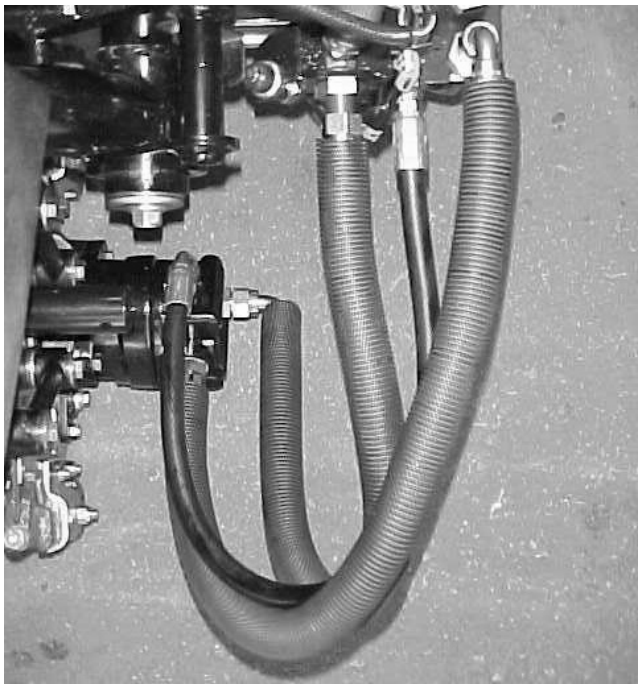

Figure 19

4. Route a tipper chain up thru slot in end of each carrier frame. Secure tipper chain to top of carrier frame with a capscrew, washer and locknut (Fig. 20).

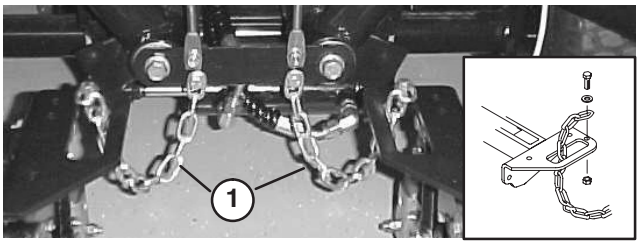

Figure 20

1. Tipper chain

Mount Cutting Unit Drive Motors

1. Position cutting units in front of lift arm pivot rods.
2. Remove weights and gasket (Fig. 21) from inside end of right hand cutting unit. Remove plug from bearing housing on outside end of right hand cutting unit and install weights and gasket. Locate spider coupling (Fig. 22) shipped in bearing housing.

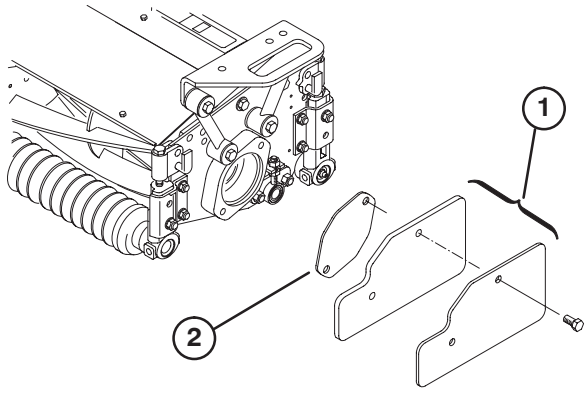

Figure 21

1. Weights
2. Gasket

3. Remove shipping plug from bearing housings on remaining cutting units (Fig. 17).
4. Insert O–ring (supplied with cutting unit) on flange of drive motor.
5. Mount the motor and the spider coupling to the drive end of the cutting unit and secure with two capscrews provided with cutting unit.

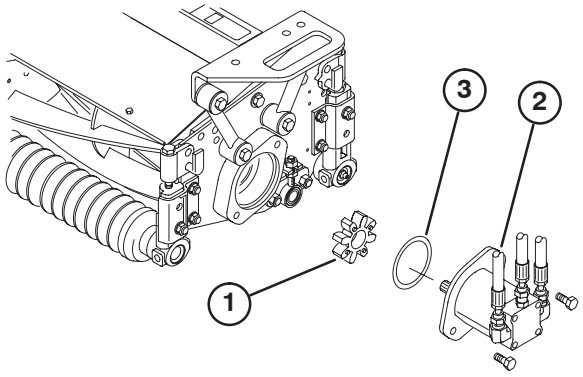

Figure 22

1. Spider coupling
2. Reel motor
3. O–ring

Adjust Lift Arms

1. Start engine, raise lift arms and check to make sure clearance between each lift arm and floor plate bracket is .18” – .32” (Fig. 23). If clearance is not in this range, back off stop bolts (Fig. 25) and adjust cylinder to attain clearance. To adjust cylinder, back off the jam nut on the cylinder (Fig. 24), remove pin from rod end and rotate clevis. Install pin and check clearance. Repeat procedure if required. Tighten clevis jam nut.

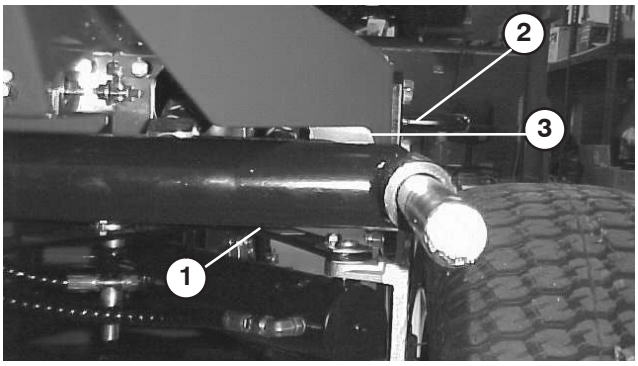

Figure 23

1. Lift arm
2. Floor plate bracket
3. Clearance

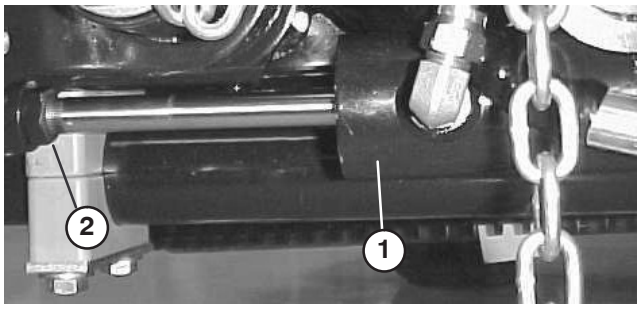

Figure 24

1. Front cylinder
2. Jam nut

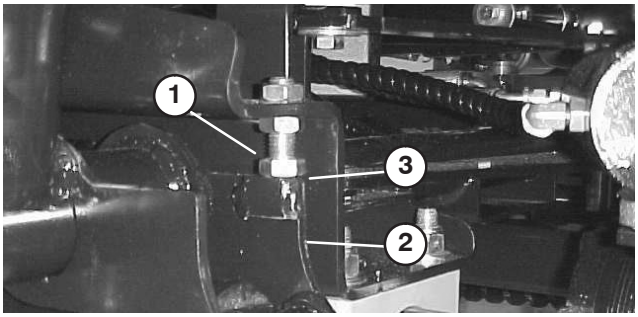

Figure 25

1. Stop bolt
2. Lift arm
3. Clearance

Note: If rear lift arm “clunks” during transport, clearance can be reduced.

2. Check to make sure clearance between each lift arm and stop bolt is .005” – .040” (Fig. 25). If clearance is not in this range, adjust stop bolts to attain clearance.

3. Start engine, raise lift arms and check to make sure clearance between wear strap on top of rear cutting unit wear bar and bumper strap is .020” – .100” (Fig. 26). If clearance is not in this range, adjust rear cylinder to attain clearance. To adjust cylinder, lower the cutting units and back off the jam nut on the cylinder (Fig. 27). Grasp cylinder rod close to the nut with a pliers and rag and rotate the rod. Raise the cutting units and check clearance. Repeat procedure if required. Tighten clevis jam nut.

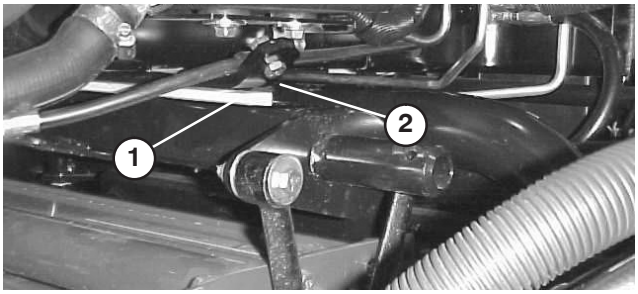

Figure 26

1. Wear bar
2. Bumper strap

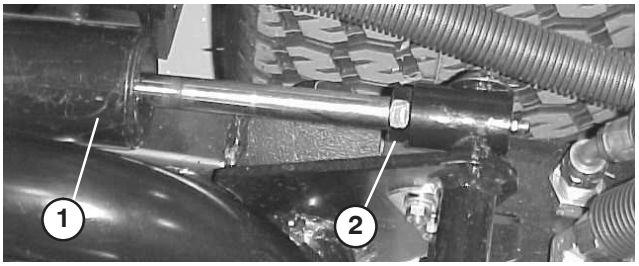

Figure 27

1. Rear cylinder
2. Adjusting nut

Important **Lack of clearance at front stops or rear wear bar could damage lift arms.**

Before Operating

Note: Determine the left and right sides of the machine from the normal operating position.

Check Crankcase Oil

The engine is shipped with oil in the crankcase; however, the oil level must be checked before and after the engine is first started.

Crankcase capacity is approximately 4 qt. (2.8 l) with the filter.

Use high-quality engine oil that meets the following specifications:

API Classification Level Required: CH–4, CI–4 or higher.

Preferred oil: SAE 15W–40 (above 0°F)

Alternate oil: SAE 10W–30 or 5W–30 (all temperatures)

Toro Premium Engine oil is available from your distributor in either 15W–40 or 10W–30 viscosity. See the parts catalog for part numbers.

1. Position machine on a level surface.
2. Remove dipstick (Fig. 28) and wipe it with a clean rag. Push dipstick down into dipstick tube and make sure it is seated fully. Pull dipstick out and check level of oil. If oil level is low, add enough oil to raise level to FULL mark on dipstick.

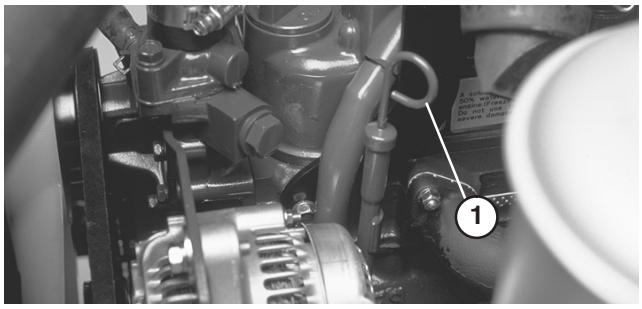

Figure 28

1. Dipstick

3. If oil level is low, remove oil fill cap (Fig. 29) and gradually add small quantities of oil, checking level frequently, until level reaches FULL mark on dipstick.

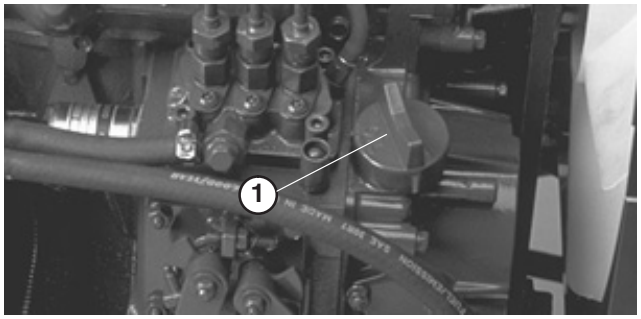

Figure 29

1. Oil fill cap

4. Install oil fill cap and close hood.

Important Be sure to keep the engine oil level between the upper and lower limits on the oil gauge. Engine failure may occur as a result of over filling or under filling the engine oil.

Fill Fuel Tank

The engine runs on No. 2 diesel fuel.

Fuel tank capacity is approximately 7.5 gallons.

1. Clean area around fuel tank cap (Fig. 30).

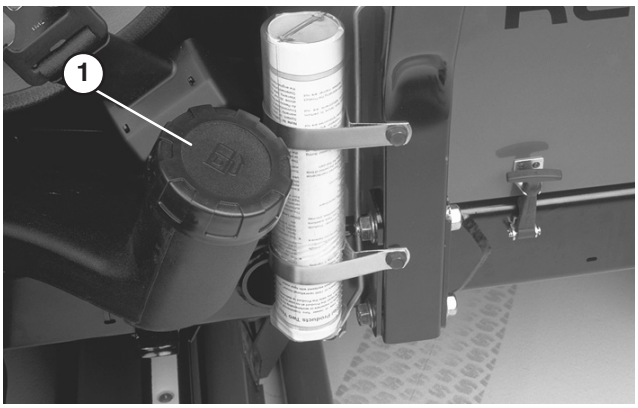

Figure 30

1. Fuel tank cap

2. Remove fuel tank cap.
3. Fill tank to bottom of filler neck. **DO NOT OVERFILL.** Then install cap.
4. Wipe up any fuel that may have spilled to prevent a fire hazard.

Danger

Under certain conditions, diesel fuel and fuel vapors are highly flammable and explosive. A fire or explosion from fuel can burn you and others and can cause property damage.

- **Use a funnel and fill the fuel tank outdoors, in an open area, when the engine is off and is cold. Wipe up any fuel that spills.**
- **Do not fill the fuel tank completely full. Add fuel to the fuel tank until the level is 1 in. (25 mm) below the bottom of the filler neck. This empty space in the tank allows the fuel to expand.**
- **Never smoke when handling fuel, and stay away from an open flame or where fuel fumes may be ignited by a spark.**
- **Store fuel in a clean, safety-approved container and keep the cap in place.**

Check Cooling System

Clean debris off radiator and oil cooler daily (Fig. 31), hourly if conditions are extremely dusty and dirty; refer to Cleaning Radiator.

1. The cooling system is filled with a 50/50 solution of water and permanent ethylene glycol anti–freeze. Check level of coolant at beginning of each day before starting the engine. Capacity of cooling system is approximately 6 quarts.

Caution

- **If engine has been running, pressurized hot coolant can escape when radiator cap is removed and cause burns.**

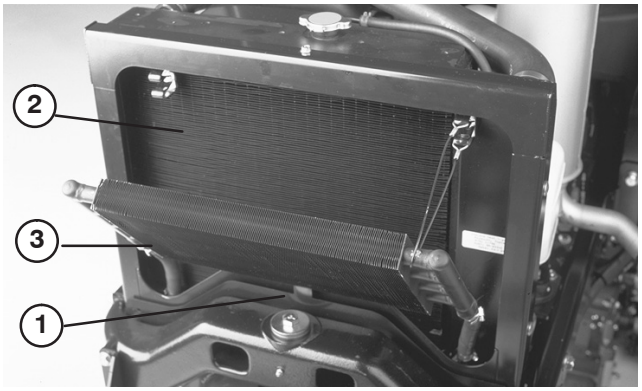

Figure 31

1. Access panel
2. Radiator
3. Oil cooler

2. Check level of coolant in expansion tank. With a cold engine, coolant level should be midway (approx) between the marks on side of tank.

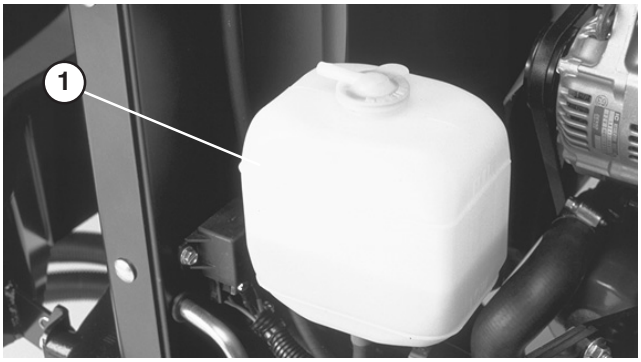

Figure 32

1. Expansion tank

3. If coolant level is low, remove expansion tank cap and replenish the system. DO NOT OVERFILL.
4. Install expansion tank cap.

Checking the Hydraulic System

The machines reservoir is filled at the factory with approximately 3.5 U.S. gallons (13.2 l) of high quality hydraulic fluid. **Check the level of the hydraulic fluid before the engine is first started and daily thereafter.** The recommended replacement fluid is:

Toro Premium All Season Hydraulic Fluid
(Available in 5 gallon pails or 55 gallon drums. See parts catalog or Toro distributor for part numbers.)

Alternate fluids: If the Toro fluid is not available, other fluids may be used provided they meet all the following material properties and industry specifications. We do not recommend the use of synthetic fluid. Consult with your lubricant distributor to identify a satisfactory product Note: Toro will not assume responsibility for damage caused by improper substitutions, so use only products from reputable manufacturers who will stand behind their recommendation.

High Viscosity Index/Low Pour Point Antiwear Hydraulic Fluid, ISO VG 46

Material Properties:

Viscosity, ASTM D445	cSt @ 40°C 44 to 48 cSt @ 100°C 7.9 to 8.5
Viscosity Index ASTM D2270	140 to 160
Pour Point, ASTM D97	–34°F to –49°F

Industry Specifications:
Vickers I–286–S (Quality Level), Vickers M–2950–S (Quality Level), Denison HF–0

Note: Many hydraulic fluids are almost colorless, making it difficult to spot leaks. A red dye additive for the hydraulic system oil is available in 2/3 oz. (20 ml) bottles. One bottle is sufficient for 4–6 gal (15–22 1) of hydraulic oil. Order part no.44–2500 from your authorized Toro distributor.

Biodegradable Hydraulic Fluid – Mobil 224H

Toro Biodegradable Hydraulic Fluid
(Available in 5 gallon pails or 55 gallon drums. See parts catalog or Toro distributor for part numbers.)

Alternate fluid: Mobil EAL 224H

This is vegetable–oil based biodegradable oil tested and approved by Toro for this model. This fluid is not as resistant to to high temperatures as standard fluid, so install an oil cooler if required by the operator manual and follow recommended fluid change intervals with this fluid. Contamination by mineral–based hydraulic fluids will change the biodegradability and toxicity of this oil. When changing from standard fluid to the biodegradable type, be certain to follow the approved flushing procedure. Contact your local Toro Distributor for details.

1. Position machine on a level surface, lower the cutting units and stop the engine.
2. Clean area around filler neck and cap of hydraulic tank (Fig. 33). Remove cap from filler neck.

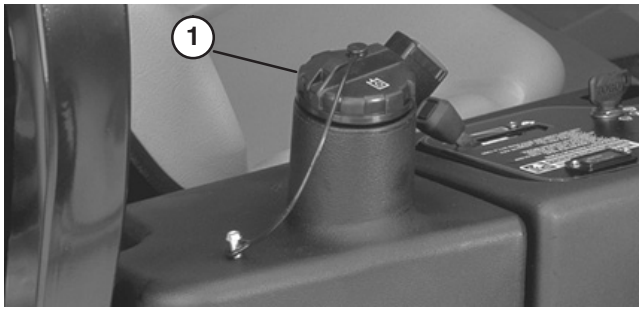

Figure 33

1. Hydraulic tank cap

3. Remove dipstick from filler neck and wipe it with a clean rag. Insert dipstick into filler neck; then remove it and check level of fluid. Fluid level should be within 1/4 inch of mark on dipstick.
4. If level is low, add appropriate fluid to raise level to full mark.
5. Install dipstick and cap onto filler neck.

Check Tire Pressure

The tires are over–inflated for shipping. Therefore, release some of the air to reduce the pressure. Correct air pressure in tires is 14 –18 psi.

Important Maintain recommended pressure in all tires to assure a good quality–of–cut and proper machine performance.

Danger

Low tire pressure decreases the machine's sidehill stability. Do not under inflate tires. This could cause a rollover, which may result in personal injury or death.

Check Reel To Bedknife Contact

Each day before operating, check reel to bedknife contact, regardless if quality of cut had previously been acceptable. There must be light contact across the full length of the reel and bedknife (refer to Adjusting Reel to Bedknife in Cutting Unit Operator's Manual).

Check Torque Of Wheel Nuts

Warning

Torque wheel nuts to 45-65 ft–lb after 1-4 hours of operation and again after 10 hours of operation and every 200 hours thereafter. Failure to maintain proper torque could result in failure or loss of wheel and may result in personal injury.

Controls

Note: Determine the left and right sides of the machine from the normal operating position.

Traction Pedals

Depress traction forward pedal to move forward. Depress traction reverse pedal to move backward or to assist in stopping when moving forward. Also, allow pedal to move or move it to neutral position to stop machine.

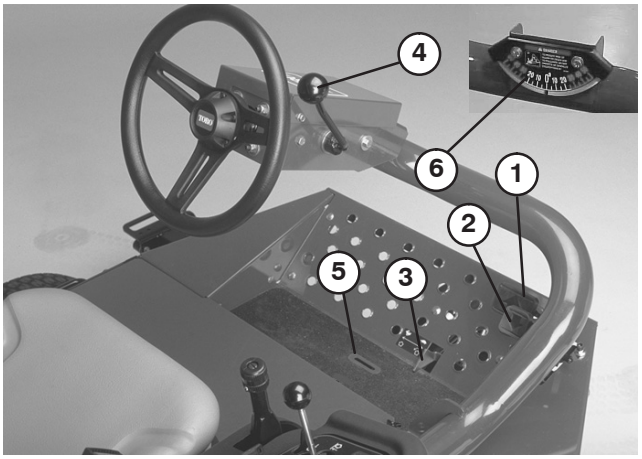

Figure 34

1. Forward traction pedal
2. Reverse traction pedal
3. Mow/transport pedal
4. Tilt steering wheel
5. Indicator slot
6. Angle indicator

Mow/Transport Slide

Using your heel, move slide to the left to transport and to the right to mow. **The cutting units will only operate in the mow position.**

Note: Mow speed is set at the factory to 6 mph. It can be increased or decreased by adjusting the speed stop screw (Fig. 35)

Tilt Steering Lever

Pull lever back to loosen to tilt the steering wheel to desired position. Then push lever forward to tighten.

Angle Indicator

Indicates sidehill angle of the machine in degrees.

Indicator Slot

The slot in the operator's platform indicates when the cutting units are in the center position.

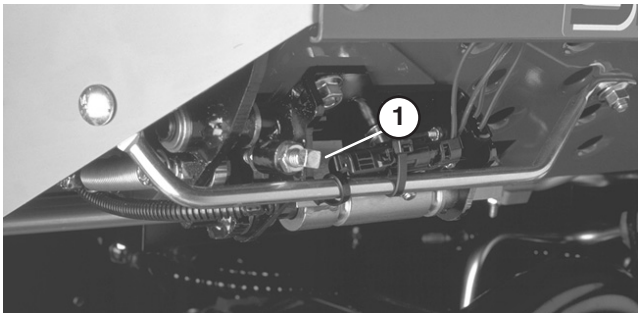

Figure 35

1. Speed stop screw

Starter Switch

The starter switch, used to start, stop and preheat the engine, has three positions: OFF, ON/PREHEAT and START. Rotate key to ON/PREHEAT position until glow plug indicator light goes out (approximately 7 seconds), then rotate key to START position to engage starter motor. Release key when engine starts. The key will move automatically to the ON/RUN position. To shut engine off, rotate key to OFF position. Remove key from switch to prevent accidental starting.

Throttle

Moving throttle forward increases engine speed, rearward decreases engine speed.

Cutting Unit Shift Lever

To lower cutting units to the ground, move lift lever forward. Cutting units will not drop unless engine is running and will not operate in raised position. To raise cutting units, pull lift lever rearward to the RAISE position.

Model 03201 only– Move lever to the right or left to move cutting units in same direction. This should only be done when cutting units are raised or if they're on the ground and the machine is moving.

Danger

The machine is most stable on a side hill when the cutting units are shifted uphill. Shifting cutting units downhill decreases machine stability. This could cause a rollover, which may result in personal injury or death.

Note: Lever does not have to be held in forward position while cutting units are lowered.

Cutting Unit Drive Switch

The switch has two positions: ENGAGE and DISENGAGE. Rocker switch operates a solenoid valve, on valve bank, to drive cutting units.

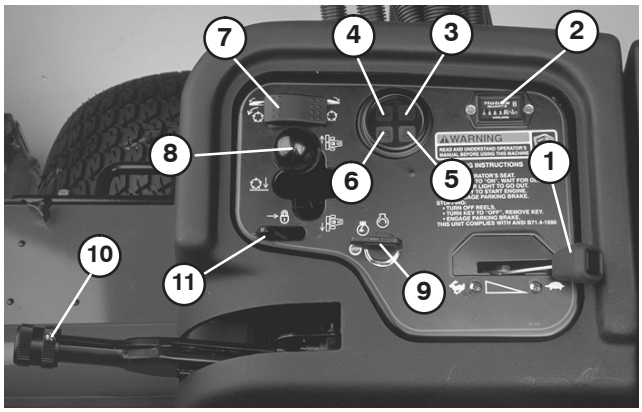

Figure 36

1. Throttle
2. Hour meter
3. Temperature light
4. Oil pressure light
5. Glow plug indicator
6. Alternator light
7. Cutting unit drive switch
8. Cutting unit shift lever
9. Ignition switch
10. Parking brake
11. Lift lever lock

Hour Meter

Indicates the total hours of machine operation. The Hour Meter starts to function whenever the key switch is ON.

Engine Coolant Temperature Warning Light

Light glows if engine coolant temperature is high. If traction unit is not stopped and coolant temperature rises another 10° F., the engine will kill.

Oil Pressure Warning Light

Light glows if engine oil pressure drops below a safe level.

Alternator Light

The amp light should be off when engine is running. If it is on, the charging system should be checked and repaired as necessary.

Glow Plug Indicator

Indicator light will glow when glow plugs are operating.

Parking Brake

Whenever the engine is shut off, the parking brake must be engaged to prevent accidental movement of the machine. To engage the parking brake, pull up on lever. Engine will stop if traction pedal is depressed with parking brake engaged.

Lift Lever Lock

Move lever rearward to prevent cutting units from dropping.

Reel Speed Control

(Located under console cover) – To obtain the desired clip rate (reel speed), rotate reel speed control knob to appropriate setting for height–of–cut setting and mower speed. Refer to Selecting Clip Rate section of Manual.

Backlap Control

(Located under console cover) – Rotate knob clockwise for backlapping and counterclockwise for mowing. Do not change knob position when reels are rotating.

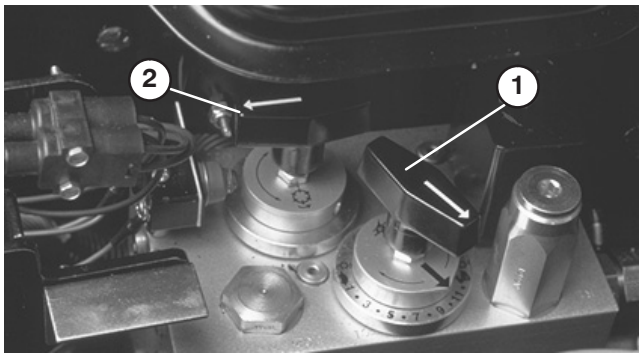

Figure 37

1. Reel speed control
2. Backlap control

Fuel Gauge

Registers amount of fuel in tank.

Seat Adjustment

Fore and Aft Adjustment — Move lever on side of seat outward, slide seat to desired position and release lever to lock seat into position.

Operation

Note: Determine the left and right sides of the machine from the normal operating position.

Starting/Stopping Engine

Important The fuel system may have to be bled if any of the following situations have occurred:

- **Initial start up of a new engine.**
- **Engine has ceased running due to lack of fuel.**
- **Maintenance has been performed upon fuel system components; i.e. filter replaced, etc.**
- **Refer to Bleeding Fuel System**

1. Be sure parking brake is set and Reel Drive switch is in DISENGAGE position.
2. Remove foot from traction pedal and make sure pedal is in neutral position.
3. Move throttle lever to 1/2 throttle position.
4. Insert key into switch and rotate it to ON/PREHEAT position until glow plug indicator light goes out (approximately 7 seconds), then rotate key to START position to engage starter motor. Release key when engine starts. The key will move automatically to the ON/RUN position.

Important To prevent overheating of the starter motor, do not engage starter longer than 15 seconds. After 10 seconds of continuous cranking, wait 60 seconds before engaging starter motor again.

5. When engine is started for the first time, or after overhaul of the engine, operate the machine in forward and reverse for one to two minutes. Also operate the lift lever and reel drive switch to be sure of proper operation of all parts.

Turn steering wheel to the left and right to check steering response. Then shut engine off and check for oil leaks, loose parts and any other noticeable malfunctions.

Caution

- **Shut engine off and wait for all moving parts to stop before checking for oil leaks, loose parts or other malfunctions.**

6. To stop engine, move throttle control to IDLE position, move reel drive switch to DISENGAGE and rotate starter key to OFF. Remove key from switch to prevent accidental starting.

Bleeding Fuel System

1. Park the machine on a level surface. Make sure fuel tank is at least half full.
2. Unlatch and raise hood.
3. Open the air bleed screw on the fuel injection pump (Fig. 38).

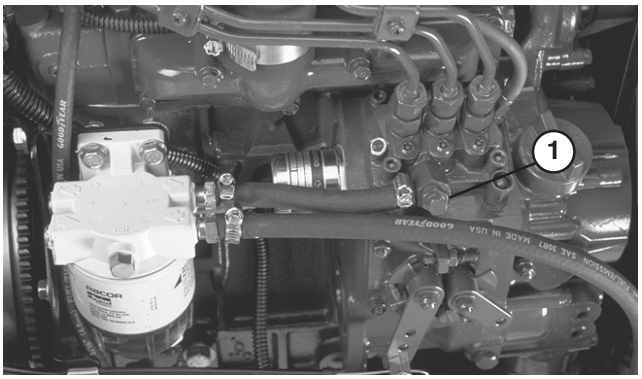

Figure 38

1. Fuel injection pump bleed screw

Danger

Under certain conditions, diesel fuel and fuel vapors are highly flammable and explosive. A fire or explosion from fuel can burn you and others and can cause property damage.

- **Use a funnel and fill the fuel tank outdoors, in an open area, when the engine is off and is cold. Wipe up any fuel that spills.**
- **Do not fill the fuel tank completely full. Add fuel to the fuel tank until the level is 1 in. (25 mm) below the bottom of the filler neck. This empty space in the tank allows the fuel to expand.**
- **Never smoke when handling fuel, and stay away from an open flame or where fuel fumes may be ignited by a spark.**
- **Store fuel in a clean, safety-approved container and keep the cap in place.**

4. Turn key in ignition switch to the ON position. Electric fuel pump will begin operation, thereby forcing air out around air bleed screw. Leave key in ON position until solid stream of fuel flows out around screw. Tighten screw and turn key to OFF.

Note: Normally, engine should start after above bleeding procedures are followed. However, if engine does not start, air may be trapped between injection pump and injectors; refer to Bleeding Air From Injectors.

Check Operation Of Interlock Switches

Caution

If safety interlock switches are disconnected or damaged the machine could operate unexpectedly causing personal injury.

- **Do not tamper with the interlock switches.**
- **Check the operation of the interlock switches daily and replace any damaged switches before operating the machine.**
- **Replace switches every two years regardless of whether they are operating properly or not.**

1. Make sure all bystanders are away from the area of operation. Keep hands and feet away from cutting units.
2. With operator on seat, the engine must not start with either reel switch engaged or traction pedal engaged. Correct problem if not operating properly.
3. With operator on the seat, traction pedal in neutral, parking brake off and reel switch in OFF position, the engine should start. Lift off the seat and slowly depress the traction pedal, the engine should stop in one to three seconds. Correct problem if not operating properly.
4. With operator on the seat, engine running, reel transport slide in mow and reel switch in ON position, lower cutting units. Reels should come on. Pull back on the lift lever, the reels should stop when fully raised. Correct problem if not operating properly.

Note: The machine is equipped with an interlock switch on the parking brake. Engine will stop if traction pedal is depressed with parking brake engaged.

Towing Traction Unit

In case of emergency, the Reelmaster can be towed for a short distance. However, Toro does not recommend this as a standard procedure.

Important Do not tow the machine faster than 2–3 mph because drive system may be damaged. If machine must be moved a considerable distance, transport it on a truck or trailer.

1. Locate by–pass valve on pump and rotate it 90°.

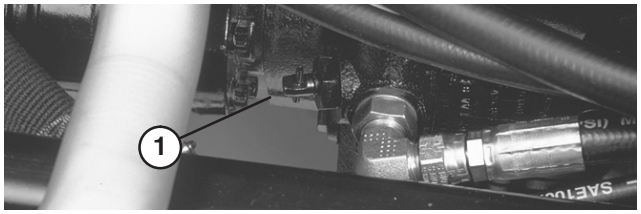

Figure 39

1. By–pass valve

2. Before starting engine, close by–pass valve by rotating it 90°. Do not start engine when valve is open.

Operating Characteristics

Practice operating the Reelmaster and become thoroughly familiar with it.

Start the engine and run it at half idle until it warms up. Push the throttle lever all the way forward, lift the cutting units, disengage the parking brake, press the forward traction pedal and carefully drive off to an open area.

Practice going both forward and in reverse, starting and stopping the machine. To stop, take your foot off the traction pedal and let it return to neutral or press down on the reverse pedal to stop. Going down a hill, you may need to use the reverse pedal to stop.

When driving on slopes, drive slowly to maintain steering control and avoid turns to prevent rollovers. **In side hill situations you should shift the sidewinder cutting units to the up hill side to give you more stability. Conversely, shifting the cutting units to the down hill side will give you less stability. This should always be done before going on a side hill.**

When possible, mow up and down hills rather than across them. Have the cutting units lowered when going down a hill to maintain steering control. Do not attempt to turn on a hill.

Practice driving around obstacles with the reels up and down. Be careful when driving between narrow objects so you don't damage the machine or cutting units.

On the Sidewinder unit, get a feel for the reach of the cutting units so you don't hang them up or damage them in any way.

Don't shift the units from side to side, unless the cutting units are down and the machine is moving, or the cutting units are up in the transport position. Shifting the cutting units when they are down and the machine is not moving may cause turf damage.

The Reelmaster is a precision mowing machine, so always drive slowly in rough areas.

Danger

The mower has a unique traction system that will allow the machine to move forward on side hills, even if the uphill wheel should come of the ground. If this should happen, the operator or any bystanders can be seriously injured or killed in a rollover.

The slope angle at which the machine will tip is dependent on many factors. Among these are mowing conditions such as wet or undulating turf, speed (especially in turns), position of the cutting units (with Sidewinder) tire pressure and operator experience.

At side hill angles of 20 degrees or less the risk of a rollover is low. As the slope angle increases to a Toro recommended maximum limit of 25 degrees the risk of a rollover increases to a moderate level. DO NOT EXCEED A 25 DEGREE SIDE HILL SLOPE ANGLE BECAUSE THE RISK OF A ROLLOVER AND SERIOUS INJURY OR DEATH IS VERY HIGH.

To determine which hills or slopes may be safely operated on, a site survey of the mowing area must be done. When performing this site survey always use common sense and take into consideration the turf condition and the rollover risk. To determine which hills or slopes may be safely operated on use the inclinometer provided with each machine. To perform a site survey, lay a 4' two by four on the slope surface and measure the angle of the slope. The 2 by 4 will average the slope but will not take into consideration dips or holes which can cause a sudden change in sidehill angle. THE MAXIMUM SIDE HILL ANGLE SHOULD NOT BE GREATER THAN 25 DEGREES.

Additionally, the Reelmaster 3100–D is equipped with an angle indicator mounted on the steering tube. This indicates the sidehill angle the machine is on and identifies the recommended maximum limit of 25 degrees.

ALWAYS WEAR YOUR SEAT BELT.

If a person appears in or near the operating area, stop the machine, and don't start up again until the area is cleared. The Reelmaster is a one–person machine. Never let anyone else ride on the machine with you. This is extremely dangerous and could result in serious injury.

Accidents can happen to anyone. The most common causes are excessive speed, sudden turns, terrain (with the Reelmaster 3100–D that's knowing what slopes and hills can be mowed safely), not stopping the engine before leaving the operator's seat, and drugs which impair your alertness. Cold capsules or prescription drugs may cause drowsiness, as can alcohol and other drugs. Stay alert and stay safe. Failure to do so could result in serious injury.

The Sidewinder offers up to a maximum of 23 inches of overhang, allowing you to trim closer to the edge of traps and other obstacles, while at the same time keeping the tractor tires as far away from the edge of traps or water hazards as possible.

If an obstacle is in the way, shift the cutting units to easily mow around it.

The use of protective equipment for eyes, ears, feet, and head is recommended.

When transporting the machine from one work area to another, raise cutting units to the fully up position, move Mow/Transport slide to the left to transport and place throttle in FAST position. **(The cutting units will not operate in transport.)**

Mowing Techniques

To begin cutting, engage the reels, then approach the mowing area slowly. Once the front reels are over the mowing area, lower the cutting units.

To achieve the professional straight line cut and striping that is desirable for some applications, find a tree or other object in the distance and drive straight toward it.

As soon as the front reels reach the edge of the mowing area, lift the cutting units and perform a tear drop turn, to quickly line you up for your next pass.

Mowing around bunkers ponds or other contours is easily done with The Reelmaster 3100–D with Sidewinder. To use the Sidewinder application, move the control lever left or right, depending on your mowing application. The cutting units can also be shifted to vary tire tracking.

The Reelmaster 3100–D cutting units can throw clippings to the front or rear. Front throw should be used when cutting off smaller amounts of grass; thus, leaving a better after cut appearance. To throw clippings to the front, simply close the rear shield on the cutting units.

Caution

- **Shut engine off and wait for all moving parts to stop before opening or closing cutting unit shields**

When cutting off larger amounts of grass, the shields shown be positioned to just below horizontal. **Do not open the shields too far or excessive clippings can build up on the frame, rear radiator screen and engine area.**

The cutting units are also equipped with balance weights, on the non–motor end, to give an even cut. Weights can be added or removed if mismatch occurs on your turf.

After Mowing

At the completion of mowing operation, thoroughly wash the machine with a garden hose – without a nozzle – so excessive water pressure will not cause contamination and damage to seals and bearings. Make sure radiator and oil cooler are kept free of dirt or grass clippings. After cleaning, it is recommended the machine be inspected for possible hydraulic fluid leaks, damage or wear to hydraulic and mechanical components and the cutting units checked for sharpness and proper reel to bedknife adjustment.

IMPORTANT: After wash down, move the Sidewinder mechanism (model 03201 only) from left to right several times to remove water between bearing blocks and cross tube.

Selecting Clip Rate (Reel Speed)

To achieve a consistent, high quality of cut, and a uniform after cut appearance, it is important that the reel speed be matched to the height of cut.

Important If reel speed is too slow, clip marks may be visible. If reel speed is too fast the cut may have a fuzzy appearance.

Adjust the clip rate (reel speed) as follows:

1. Verify the height–of–cut setting on the cutting units. Using the column of the chart, on page 30, listing either 5 or 8 blade reels, find the height of cut listing nearest the actual height–of–cut setting. Look across the chart to find the number corresponding to that height of cut.

Note: The higher the number, the higher the speed.

2. Turn the reel speed control knob to the number setting determined in step 1.



Figure 40

1. Reel speed control

3. Operate the machine for several days, then examine the cut to ensure satisfaction with the quality of cut. The reel speed knob may be set one position on either side of the position indicated on the chart to account for differences in grass condition, grass length removed and personal preference.

5 BLADE REEL

REEL SPEED SELECTION CHART

HEIGHT OF CUT		5 MPH	6 MPH
2–1/2	2.50	3	3
2–3/8	2.38	3	4
2–1/4	2.25	3	4
2–1/8	2.13	3	4
2	2.00	3	4
1–7/8	1.88	4	5
1–3/4	1.75	4	5
1–5/8	1.63	5	6
1–1/2	1.50	5	7
1–3/8	1.38	5	8
1–1/4	1.25	6	11
1–1/8	1.13	8	11*
1	1.00	11	11*
7/8	0.88	11*	11*
3/4	0.75	11*	11*
5/8	0.63	11*	11*
1/2	0.50	11*	11*
3/8	0.38	11*	11*

*** This height–of–cut and/or mowing speed not recommended for 5 blade reels.**

8 BLADE REEL

REEL SPEED SELECTION CHART

HEIGHT OF CUT		5 MPH	6 MPH
2–1/2	2.50	3*	3*
2–3/8	2.38	3*	3*
2–1/4	2.25	3*	3*
2–1/8	2.13	3*	3*
2	2.00	3*	3*
1–7/8	1.88	3*	3*
1–3/4	1.75	3*	3*
1–5/8	1.63	3*	3*
1–1/2	1.50	3	4
1–3/8	1.38	3	4
1–1/4	1.25	4	4
1–1/8	1.13	4	5
1	1.00	5	6
7/8	0.88	5	7
3/4	0.75	7	11
5/8	0.63	11	11*
1/2	0.50	11	11*
3/8	0.38	11	11*

*** This height–of–cut and/or mowing speed not recommended for 8 blade reels.**

Note: Positions 9 to 11 give the same reel speed.

Standard Control Module (SCM)

The Standard Control Module is a ”potted” electronic device produced in a ”one size fits all” configuration. The module uses solid state and mechanical components to monitor and control standard electrical features required for safe product operation.

The module monitors inputs including neutral, parking brake, PTO, start, backlap, and high temperature. The module energizes outputs including PTO, Starter, and ETR (energize to run) solenoid.

The module is divided into inputs and outputs. Inputs and outputs are identified by green LED indicators mounted on the printed circuit board.

The start circuit input is energized by 12 VDC. All other inputs are energized when the circuit is closed to ground. Each input has a LED that is illuminated when the specific circuit is energized. Use the input LED’s for switch and input circuit troubleshooting.

Output circuits are energized by an appropriate set of input conditions. The three outputs include PTO, ETR, and START. Output LED’s monitor relay condition indicating the presence of voltage at one of three specific output terminals.

Output circuits do not determine output device integrity so electrical troubleshooting includes output LED inspection and conventional device and wire harness integrity testing. Measure disconnected component impedance, impedance through wire harness (disconnect at SCM), or by temporarily ”test energizing” the specific component.

The SCM does not connect to an external computer or hand held device, can not be re–programmed, and does not record intermittent fault troubleshooting data.

The decal on the SCM only includes symbols. Three LED output symbols are shown in the output box. All other LED’s are inputs. The chart below identifies the symbols.

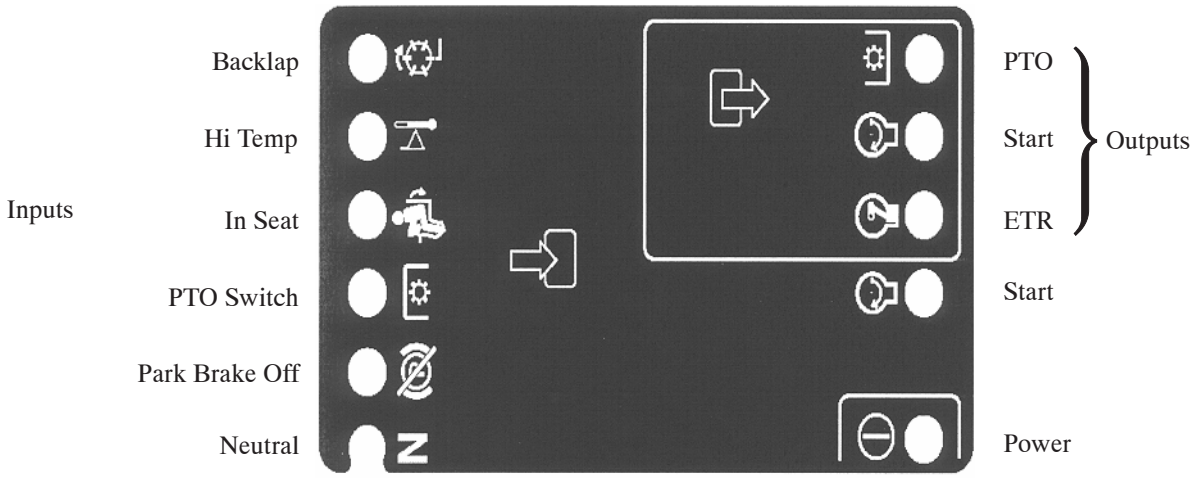

Here are the logical troubleshooting steps for the SCM device.

1. Determine the output fault you are trying to resolve (PTO, START, or ETR).
2. Move key switch to ”ON” and ensure the red ”power” LED is illuminated.
3. Move all input switches to ensure all LED’s change state.
4. Position input devices at appropriate position to achieve the appropriate output. Use the following logic chart to determine the appropriate input condition.
5. If specific output LED is illuminated without appropriate output function, check output harness, connections, and component. Repair as required.
6. If specific output LED is not illuminated, check both fuses.
7. If specific output LED is not illuminated and inputs are in appropriate condition, install new SCM and determine if fault disappears.

Each row (across) in the logic chart below identifies input and output requirements for each specific product function. Product functions are listed in the left column. Symbols identify specific circuit condition including: energized to voltage, closed to ground, and open to ground.

	INPUTS								OUTPUTS		
FUNCTION	Power On	In Neutral	Start On	Brake Off	PTO On	In Seat	Hi Temp	Back Lap	START	ETR	PTO
Start	-	-	+	O	O	-	O	O	+	+	O
Run (off unit)	-	-	O	O	O	O	O	O	O	+	O
Run (on unit)	-	O	O	-	O	-	O	O	O	+	O
Mow	-	O	O	-	-	-	O	O	O	+	+
Backlap	-	-	O	O	-	O	O	-	O	+	+
Hi-Temp	-		O				-		O	O	O

– Indicates a circuit closed to ground. – LED ON

O Indicates a circuit open to ground or de–energized – LED OFF

\+ Indicates an energized circuit (clutch coil, solenoid, or start input) LED ON.

" " A Blank indicates a circuit that is not involved with the logic.

To troubleshoot, turn on the key without starting the engine. Identify the specific function that does not work and work across the logic chart. Inspect the condition of each input LED's to ensure it matches the logic chart.

If the input LED's are correct, check the output LED. If the output LED is illuminated but the device is not energized, measure available voltage at the output device, continuity of the disconnected device, and potential voltage on the ground circuit (floating ground). Repairs will vary depending on your findings.

Lubrication

The traction unit has grease fittings that must be lubricated regularly with No. 2 General Purpose Lithium Base Grease. If machine is operated under normal conditions, lubricate bearings and bushings after every 50 hours of operation. Bearings and bushings must be lubricated daily when operating conditions are extremely dusty and dirty. Dusty and dirty operating conditions could cause dirt to get into the bearings and bushings, resulting in accelerated wear. Lubricate bearings and bushings immediately after every washing, regardless of the interval listed.

The traction unit bearings and bushings that must be lubricated are: Rear cutting unit pivot (Fig. 41), Front cutting unit pivot (Fig. 42), SideWinder cylinder ends (2) (Model 03201 only) (Fig. 43), Steering pivot (Fig. 44), Rear lift arm pivot and lift cylinder (2) (Fig. 45), Left front lift arm pivot and lift cylinder (2) (Fig. 46), Right front lift arm pivot and lift cylinder (2) (Fig. 47), Neutral adjust mechanism (Fig. 48), Mow/Transport slide (Fig. 49), Belt tension pivot (Fig. 50) Steering cylinder (Fig. 51).

Important Do not lubricate Sidewinder (model 03201) cross tube, bearing blocks are self lubricated.

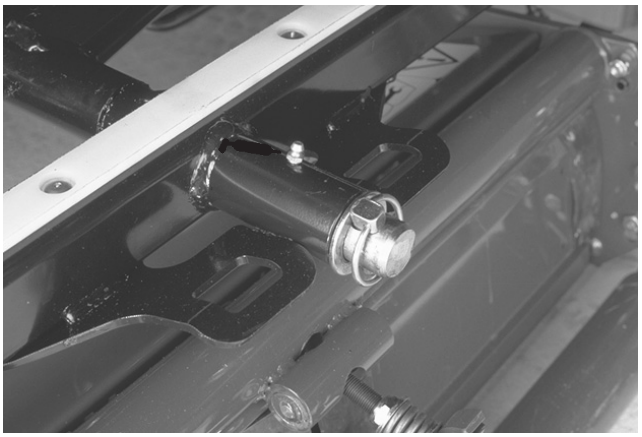

Figure 41

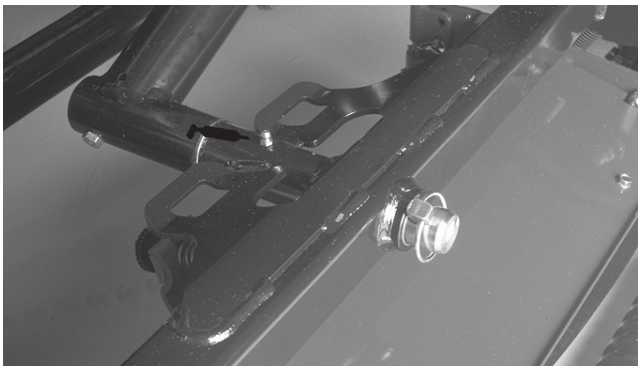

Figure 42

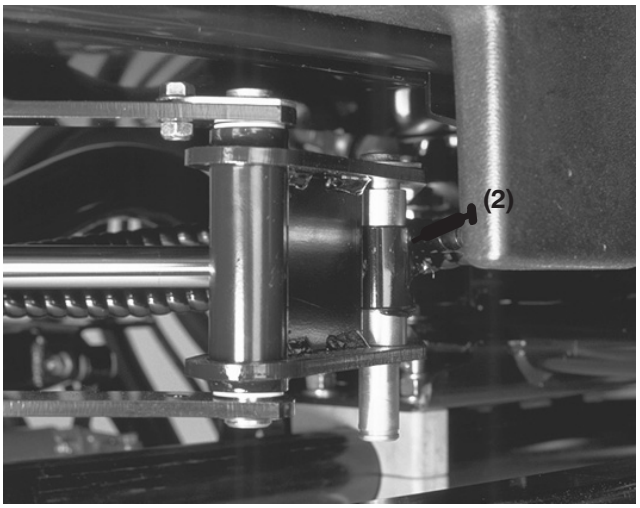

Figure 43

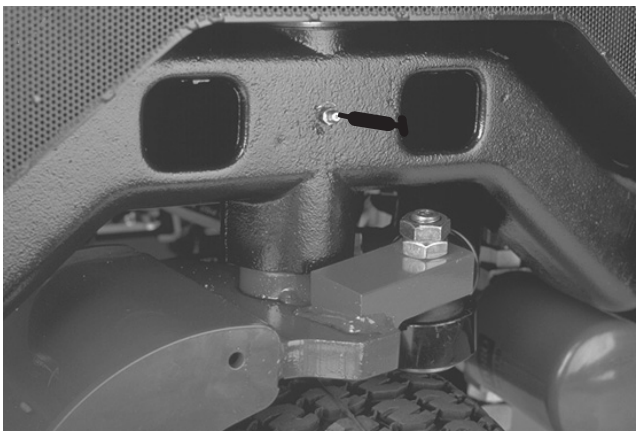

Figure 44

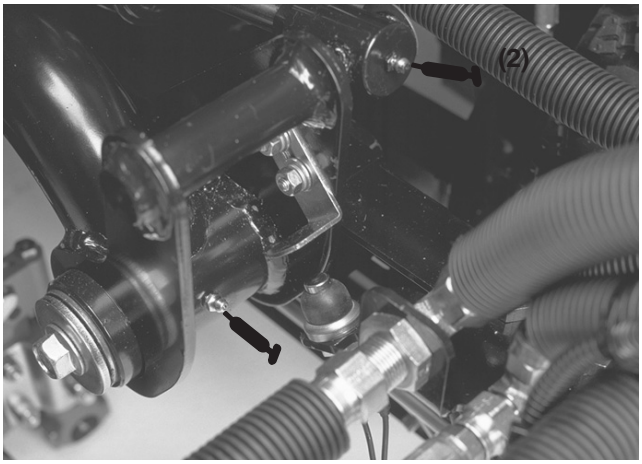

Figure 45

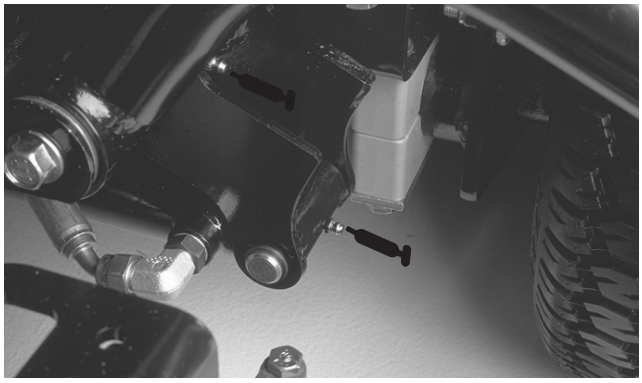

Figure 46

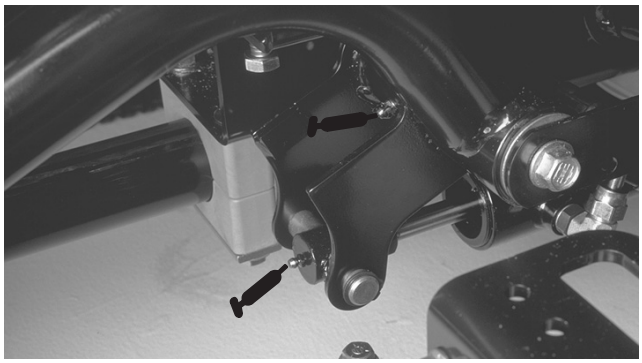

Figure 47

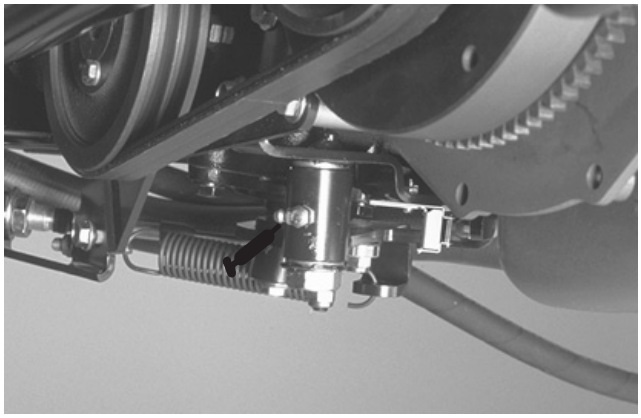

Figure 48

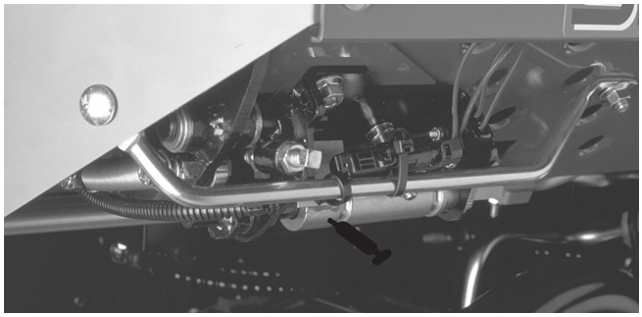

Figure 49

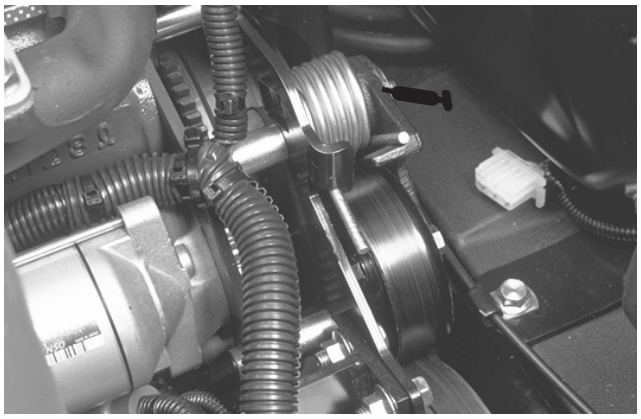

Figure 50

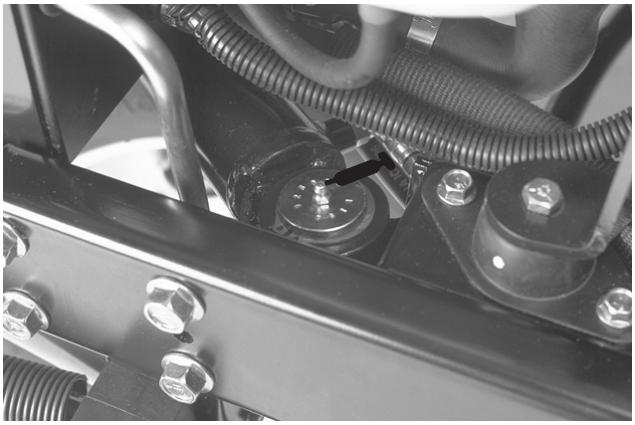

Figure 51



Figure 52
(see note)

Note: If desired, an additional grease fitting may be installed in other end of steering cylinder. Tire must be removed, fitting installed, greased, fitting removed and plug installed (Fig. 52).

Sealed Bearings

Bearings rarely fail from defects in materials or workmanship. The most common reason for failure is moisture and contamination working its way past the protective seals. Bearings that are greased will rely upon regular maintenance to purge harmful debris from the bearing area. **Sealed** bearings rely on an initial fill of special grease and a robust integral seal to keep contaminants and moisture out of the rolling elements.

The sealed bearings require no lubrication or short term maintenance. This minimizes routine service required and reduces the potential of turf damage due to grease contamination. These sealed bearing packages will provide good performance and life under normal use, but periodic inspections of bearing condition and seal integrity should be conducted to avoid downtime. These bearings should be inspected seasonally and replaced if damaged or worn. Bearings should operate smoothly with no detrimental characteristics such as high heat, noise, looseness or indications of corrosion (rust).

Due to the operating conditions these bearing/seal packages are subject to (i.e. sand, turf chemicals, water, impacts, etc.) they are considered normal wear items. Bearings that fail due to causes other than defects in materials or workmanship are typically not covered under warranty.

Note: Bearing life can be negatively affected by improper wash down procedures. Do not wash down the unit when it is still hot and avoid directing high–pressure or high volume spray at the bearings.

Maintenance

Note: Determine the left and right sides of the machine from the normal operating position.

Recommended Maintenance Schedule

Maintenance Service Interval	Maintenance Procedure
After first 10 hours	• Check Fan and Alternator Belt Tensions • Change Hydraulic Filter • Torque Wheel Lug Nuts
After first 50 hours	• Change Engine Oil and Filter • Check Engine RPM (idle and full throttle)
Every 50 hours	• Inspect Air Filter, Dust Cup, and Burp Valve • Lubricate All Grease Fittings • Check Battery Cable Connections • Check Fan and Alternator Belt Tensions • Check Battery Fluid Level
Every 100 hours	• Check Traction Belt
Every 150 hours	• Change Engine Oil and Filter
Every 200 hours	• Change Air Filter • Change Hydraulic Filter • Torque Wheel Lug Nuts
Every 400 hours	• Change Hydraulic Fluid • Change Fuel/Water Separator Filter • Change Fuel Pre Filter • Inspect Traction Cable Movement • Inspect Spider Coupling for Wear • Check Engine RPM (idle and full throttle)
Every 800 hours	• Adjust valves
Every 1000 hours	• Replace Moving Hoses • Replace Safety Switches • Coolant System – Flush/Replace Fluid • Fuel Tank – Drain/Flush • Hydraulic Tank – Drain/Flush

Caution

If you leave the key in the ignition switch, someone could accidently start the engine and seriously injure you or other bystanders.

Remove the key from the ignition and disconnect the wire from the spark plug before you do any maintenance. Set the wire aside so that it does not accidentally contact the spark plug.

Daily Maintenance Checklist

Duplicate this page for routine use.

Maintenance Check Item	For the week of:						
	Mon.	Tues.	Wed.	Thurs.	Fri.	Sat.	Sun.
Check Safety Interlock Operation							
Check Brake Operation							
Check Fuel Level							
Check Engine Oil Level							
Check Cooling System Fluid Level							
Check Drain Water/Fuel Separator							
Check Air Filter, Dust Cup & Burp Valve							
Check Radiator & Screen for Debris							
Check Unusual Engine Noises[1]							
Check Unusual Operating Noises							
Check Hydraulic System Oil Level							
Check Hydraulic Hoses for Damage							
Check Fluid Leaks							
Check Tire Pressure							
Check Instrument Operation							
Check Reel–to–Bedknife Adjustment							
Check Height–of–Cut Adjustment							
Lubricate All Grease Fittings[2]							
Touch–up Damaged Paint							

[1]= Check glow plug and injector nozzles, if hard starting, excess smoke or rough running is noted.
[2]= Immediately after every washing, regardless of the interval listed.

Important Refer to your engine operator's manual for additional maintenance procedures.

Service Interval Chart

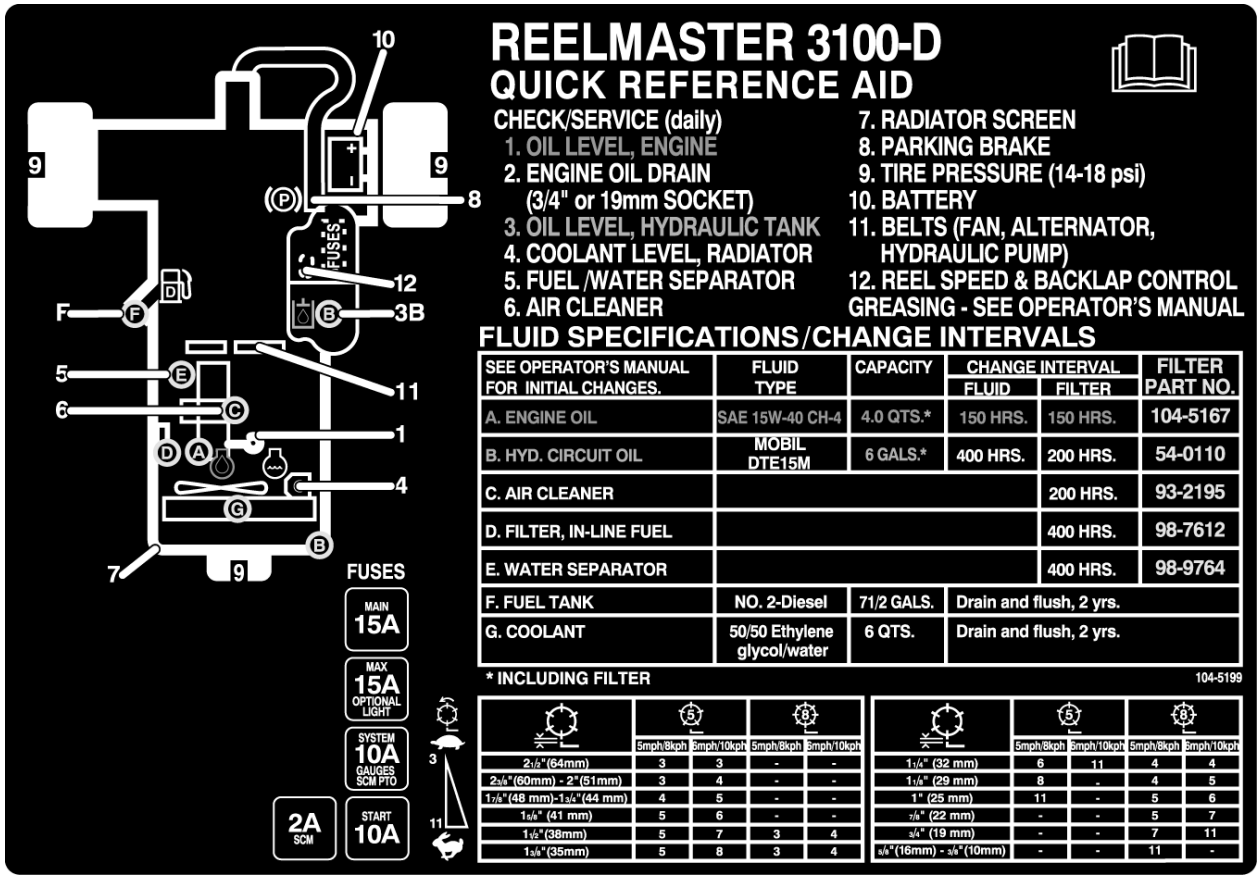

FLUID SPECIFICATIONS/CHANGE INTERVALS

SEE OPERATOR'S MANUAL FOR INITIAL CHANGES.	FLUID TYPE	CAPACITY	CHANGE INTERVAL		FILTER PART NO.
			FLUID	FILTER	
A. ENGINE OIL	SAE 15W-40 CH-4	4.0 QTS.*	150 HRS.	150 HRS.	104-5167
B. HYD. CIRCUIT OIL	MOBIL DTE15M	6 GALS.*	400 HRS.	200 HRS.	54-0110
C. AIR CLEANER				200 HRS.	93-2195
D. FILTER, IN-LINE FUEL				400 HRS.	98-7612
E. WATER SEPARATOR				400 HRS.	98-9764
F. FUEL TANK	NO. 2-Diesel	71/2 GALS.	Drain and flush, 2 yrs.		
G. COOLANT	50/50 Ethylene glycol/water	6 QTS.	Drain and flush, 2 yrs.		

* INCLUDING FILTER

104-5199

	5		8	
	5mph/8kph	8mph/10kph	5mph/8kph	8mph/10kph
2 1/2" (64mm)	3	3	-	-
2 3/8" (60mm) - 2" (51mm)	3	4	-	-
1 7/8" (48 mm) - 1 3/4" (44 mm)	4	5	-	-
1 5/8" (41 mm)	5	6	-	-
1 1/2" (38mm)	5	7	3	4
1 3/8" (35mm)	5	8	3	4

	5		8	
	5mph/8kph	8mph/10kph	5mph/8kph	8mph/10kph
1 1/4" (32 mm)	6	11	4	4
1 1/8" (29 mm)	8	-	4	5
1" (25 mm)	11	-	5	6
7/8" (22 mm)	-	-	5	7
3/4" (19 mm)	-	-	7	11
5/8" (16mm) - 3/8" (10mm)	-	-	11	-

Hood Removal

Hood may be easily removed to ease maintenance procedures in engine area of machine.

1. Unlatch and raise hood.
2. Remove cotter pin securing hood pivot to mounting brackets.
3. Slide hood to right side, lift other side and pull out of brackets.
4. Reverse procedure to reinstall hood.

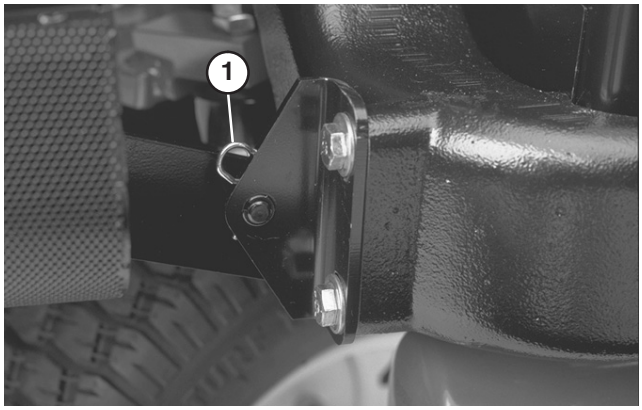

Figure 53

1. Cotter pin

General Air Cleaner Maintenance

- Check air cleaner body for damage which could possibly cause an air leak. Replace a damaged air cleaner body.
- Service the air cleaner filter every 200 hours (more frequently in extreme dusty or dirty conditions). Do not over service air filter.
- Be sure cover is sealing around air cleaner body.

Servicing Air Cleaner

1. Release latches securing air cleaner cover to air cleaner body.
2. Remove the cover from the air cleaner body. Before removing the filter, use low pressure air (40 psi, clean and dry) to help remove large accumulations of debris packed between outside of primary filter and the canister. Avoid using high pressure air which could force dirt through the filter into the intake tract. This cleaning process prevents debris from migrating into the intake when the primary filter is removed.

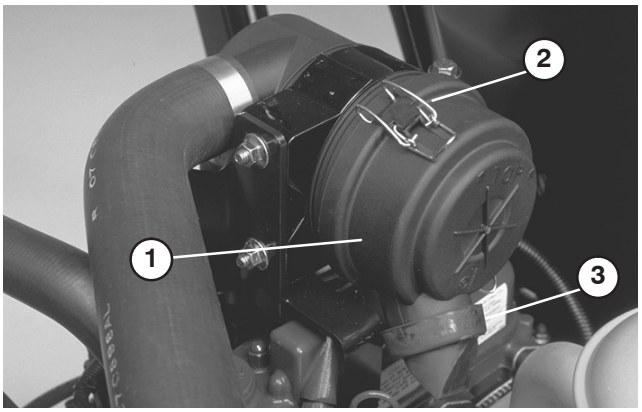

Figure 54

1. Air cleaner dust cup
2. Air cleaner latches
3. Rubber outlet valve

3. Remove and replace the primary filter. Cleaning of the used element is not recommended due to the possibility of damage to the filter media. Inspect the new filter for shipping damage, checking the sealing end of the filter and the body. Do not use a damaged element. Insert the new filter by applying pressure to the outer rim of the element to seat it in the canister. Do not apply pressure to the flexible center of the filter.
4. Clean the dirt ejection port located in the removable cover. Remove the rubber outlet valve from the cover, clean the cavity and replace the outlet valve.
5. Install the cover orienting the rubber outlet valve in a downward position – between approximately 5:00 to 7:00 when viewed from the end.

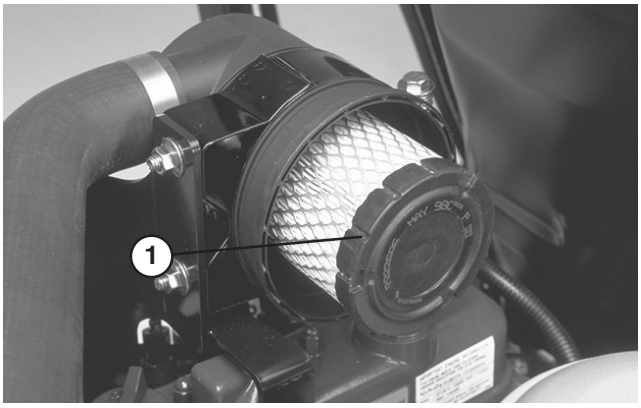

Figure 55

1. Primary filter

6. Secure the latches.

Engine Oil and Filter

Change oil and filter initially after the first 50 hours of operation, thereafter change oil and filter after every 150 hours.

1. Remove either drain plug and let oil flow into drain pan. When oil stops, install drain plug.

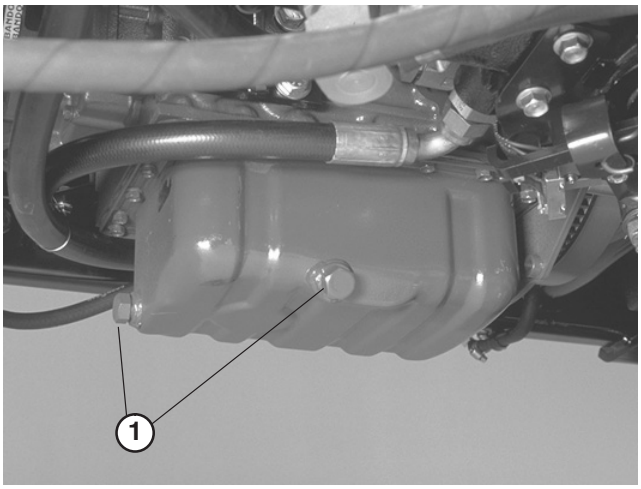

Figure 56

1. Engine oil drain plug
2.

2. Remove oil filter. Apply a light coat of clean oil to the new filter seal before screwing it on. DO NOT OVER–TIGHTEN.

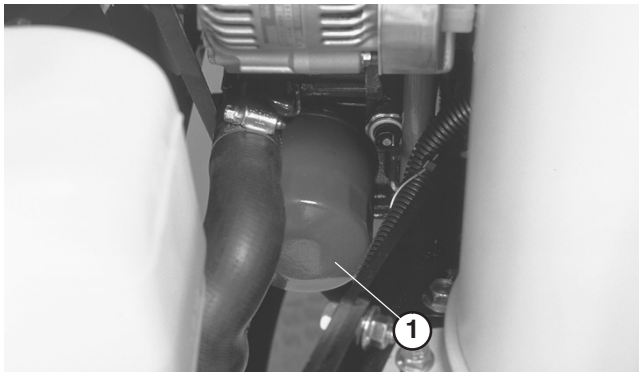

Figure 57

1. Engine oil filter

3. Add oil to crankcase, refer to Check Engine Oil.

Fuel System

Fuel Tank

Drain and clean fuel tank every 2 years. Also, drain and clean tank if fuel system becomes contaminated or if machine is to be stored for an extended period. Use clean fuel to flush out the tank.

Fuel Lines and Connections

Check lines and connections every 400 hours or yearly, whichever comes first. Inspect for deterioration, damage, or loose connections.

Water Separator

Drain water or other contaminants from water separator (Fig. 58) daily.

1. Place a clean container under fuel filter.

2. Loosen drain plug on bottom of filter canister. Tighten plug after draining.

Replace filter canister after every 400 hours of operation.

1. Clean area where filter canister mounts.

2. Remove filter canister and clean mounting surface.

3. Lubricate gasket on filter canister with clean oil.

4. Install filter canister by hand until gasket contacts mounting surface, then rotate an additional 1/2 turn.

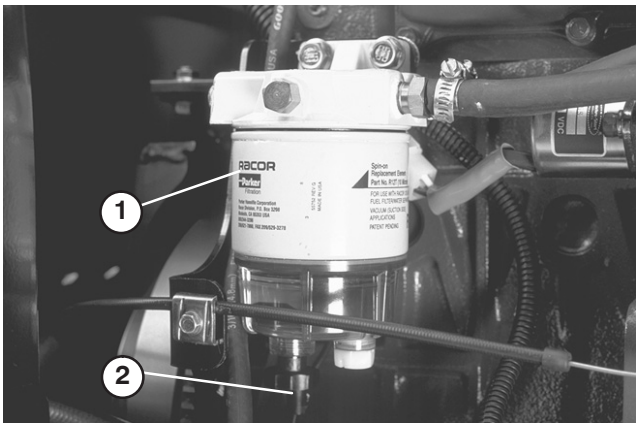

Figure 58

1. Water separator
2. Drain plug

Replacing Fuel Pre Filter

Replace the fuel pre filter, located on inside of frame rail below water separator after every 400 operating hours or yearly, whichever occurs first.

1. Remove screw securing filter to frame rail.

2. Clamp both fuel lines that connect to the fuel filter so fuel cannot drain when lines are removed.

3. Loosen the hose clamps at both ends of the filter and pull fuel lines off filter.

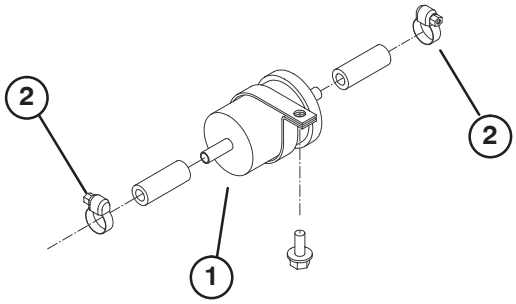

Figure 59

1. Fuel pre filter
2. Hose clamp

4. Slide hose clamps onto ends of fuel lines. Push fuel lines onto fuel filter and secure them with hose clamps. Be sure arrow on side of filter points toward the injection pump.

Danger

Under certain conditions, diesel fuel and fuel vapors are highly flammable and explosive. A fire or explosion from fuel can burn you and others and can cause property damage.

- **Use a funnel and fill the fuel tank outdoors, in an open area, when the engine is off and is cold. Wipe up any fuel that spills.**
- **Do not fill the fuel tank completely full. Add fuel to the fuel tank until the level is 1 in. (25 mm) below the bottom of the filler neck. This empty space in the tank allows the fuel to expand.**
- **Never smoke when handling fuel, and stay away from an open flame or where fuel fumes may be ignited by a spark.**
- **Store fuel in a clean, safety-approved container and keep the cap in place.**

Bleeding Air From Injectors

Note: This procedure should be used only if fuel system has been purged of air through normal priming procedures and engine will not start; refer to Bleeding Fuel System.

1. Loosen the pipe connection to the No. 1 nozzle and holder assembly.

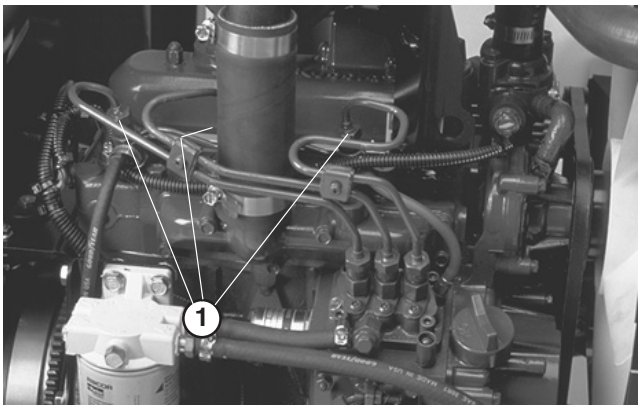

Figure 60

1. Fuel injectors (3)

2. Move throttle to FAST position.
3. Turn key in key switch to START position and watch fuel flow around connector. Turn key to OFF position when solid flow is observed.
4. Tighten pipe connector securely.
5. Repeat steps on remaining nozzles.

Cleaning Engine Cooling System

Remove debris from oil cooler and radiator daily, clean more frequently in dirty conditions.

- Turn engine off and raise hood. Clean engine area thoroughly of all debris.
- Remove access panel.

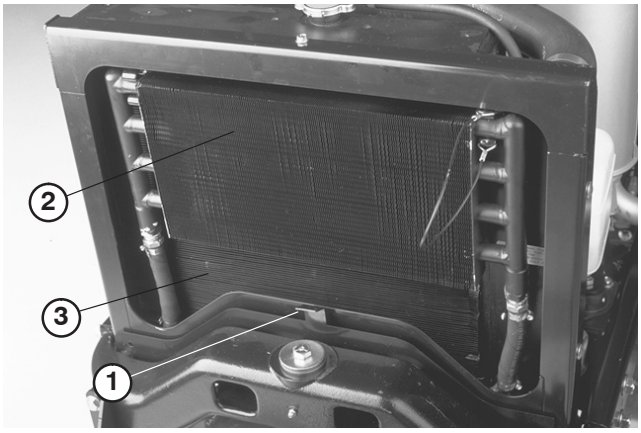

Figure 61

1. Access panel
2. Oil cooler
3. Radiator

- Remove access panel. Unlatch oil cooler and pivot rearward. Clean both sides of oil cooler and radiator area thoroughly with water or compressed air. Pivot oil cooler back into position.

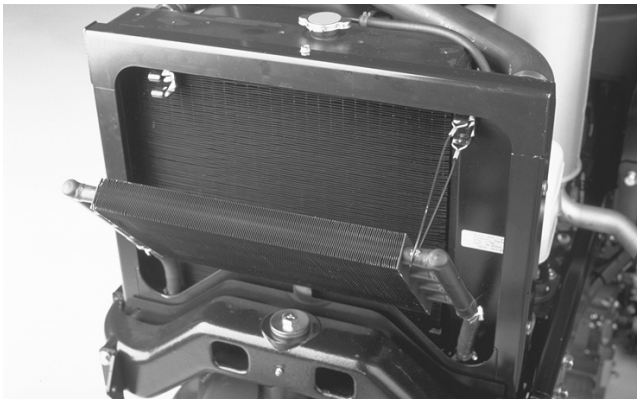

Figure 62

- Install access panel and close hood.

Servicing Engine Belts

Check condition and tension of all belts after first day of operation and every 100 operating hours thereafter.

Alternator/fan Belt

1. Open hood.
2. Check tension by depressing belt midway between alternator and crankshaft pulleys with 22 lb. of force. Belt should deflect 7/16 in. If deflection is incorrect, proceed to step 3. If correct, continue operation.
3. Loosen bolt securing brace to engine and bolt securing alternator to brace.
4. Insert pry bar between alternator and engine and pry out on alternator.
5. When proper tension is achieved, tighten alternator and brace bolts to secure adjustment.



Figure 63

1. Alternator /fan belt

Hydrostat Drive Belt Replacement

1. Insert a nut driver or small piece of tubing onto end of belt tensioning spring.

Warning

Use caution when de–tensioning spring as it is under heavy load.

2. Push down and forward on spring end to unhook from bracket and release tension on spring.
3. Replace belt.
4. Reverse procedure to tension spring.

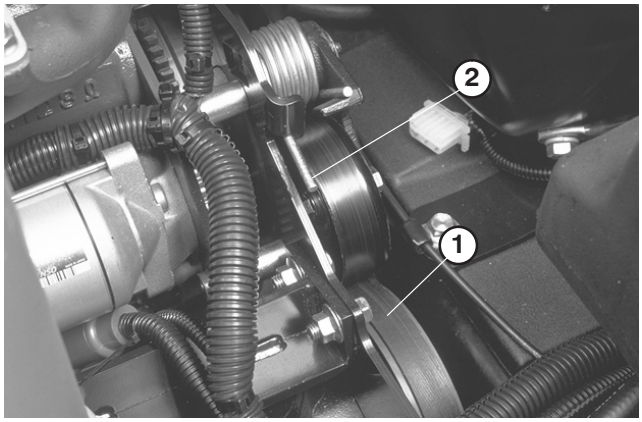

Figure 64

1. Hydrostat drive belt
2. Spring end

Adjusting Throttle

1. Position throttle lever rearward so it stops against control panel slot.
2. Loosen the throttle cable connector on the lever arm at the injection pump.

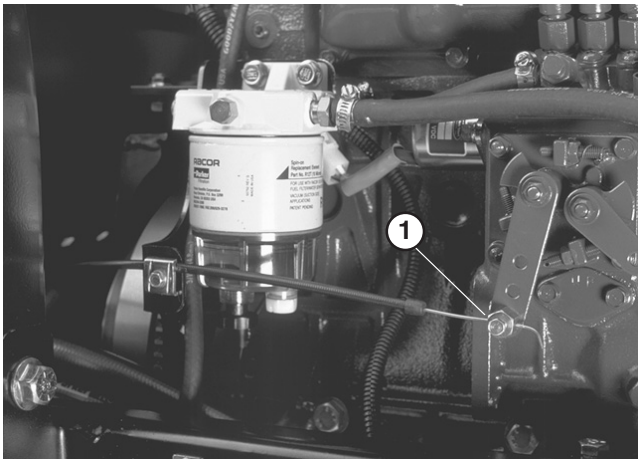

Figure 65

1. Injection pump lever arm

3. Hold the injection pump lever arm against the low idle stop and tighten the cable connector.
4. Loosen screws securing throttle control to control panel.
5. Push throttle control lever all the way forward.
6. Slide stop plate until it contacts throttle lever and tighten screws securing throttle control to control panel.
7. If throttle does not stay in position during operation, torque the lock nut, used to set the friction device on the throttle lever, to 40 – 55 in. lb. The maximum force required to operate the throttle lever should be 20 lb.

Changing Hydraulic Fluid

Change hydraulic fluid after every 400 operating hours, in normal conditions. If fluid becomes contaminated, contact your local TORO distributor because the system must be flushed. Contaminated fluid looks milky or black when compared to clean oil.

1. Turn engine off and raise hood.
2. Disconnect hydraulic line or remove hydraulic filter and let hydraulic fluid flow into drain pan. Reinstall line when hydraulic fluid stops draining.

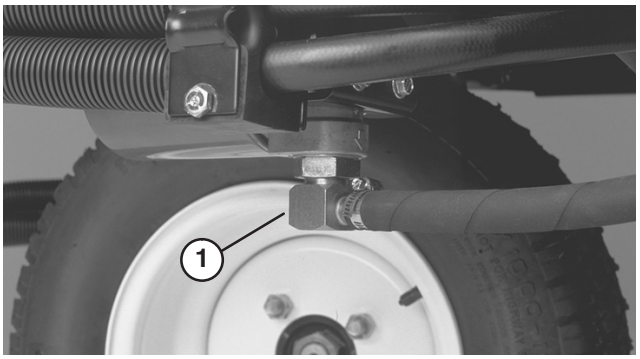

Figure 66

1. Hydraulic line

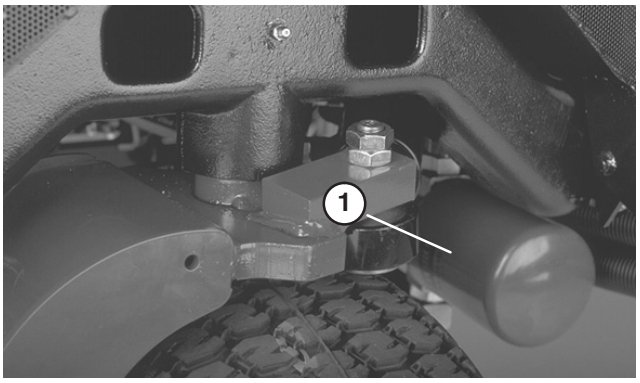

Figure 67

1. Hydraulic filter

3. Fill reservoir with approximately 3.5 gallons of hydraulic fluid. Refer to Checking Hydraulic Fluid.

Important Use only hydraulic fluids specified. Other fluids could cause system damage.

4. Install reservoir cap. Start engine and use all hydraulic controls to distribute hydraulic fluid throughout the system. Also check for leaks. Then stop the engine.
5. Check level of fluid and add enough to raise level to FULL mark on dipstick. DO NOT OVER FILL.

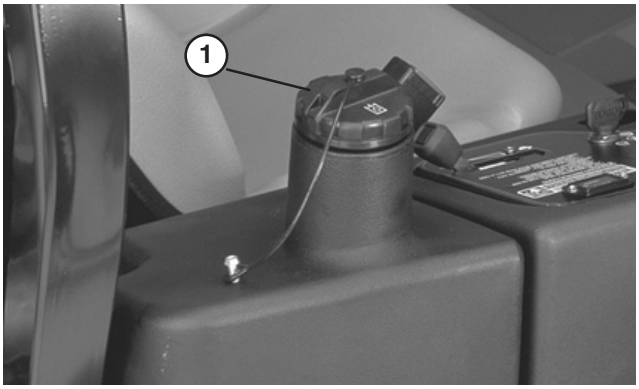

Figure 68

1. Hydraulic reservoir

Replacing Hydraulic Filter

The hydraulic system filter must be changed initially, after the first 10 hours of operation, and thereafter every 200 hours of operation or yearly, whichever comes first. Use a genuine Toro oil filter for replacement. The hydraulic oil must be changed every 400 hours of operation or yearly, whichever comes first.

Use the Toro replacement filter (Part No. 54–0110).

Important **Use of any other filter may void the warranty on some components.**

1. Position machine on a level surface, lower the cutting units, stop the engine, engage the parking brake and remove key from ignition switch.
2. Pinch off hose to filter mounting plate.
3. Clean area around filter mounting area. Place drain pan under filter and remove filter.
4. Lubricate new filter gasket and fill the filter with hydraulic fluid.
5. Assure filter mounting area is clean. Screw filter on until gasket contacts mounting plate. Then tighten filter one–half turn.
6. Start engine and let run for about two minutes to purge air from the system. Stop the engine and check for leaks.

Checking Hydraulic Lines And Hoses

Daily, check hydraulic lines and hoses for leaks, kinked lines, loose mounting supports, wear, loose fittings, weather deterioration and chemical deterioration. Make all necessary repairs before operating.

Warning

Hydraulic fluid escaping under pressure can penetrate skin and cause injury.

- **Make sure all hydraulic fluid hoses and lines are in good condition and all hydraulic connections and fittings are tight before applying pressure to the hydraulic system.**
- **Keep your body and hands away from pin hole leaks or nozzles that eject high pressure hydraulic fluid.**
- **Use cardboard or paper to find hydraulic leaks.**
- **Safely relieve all pressure in the hydraulic system before performing any work on the hydraulic system.**
- **Get immediate medical help if fluid is injected into skin.**

Adjusting Traction Drive For Neutral

If the machine "creeps" when the traction pedal is in the neutral position, the traction cam must be adjusted.

1. Park the machine on a level surface and turn the engine off.
2. Raise one front wheel and rear wheel off floor and place support blocks under frame.

Warning

One front wheel <u>and</u> rear wheel must be raised off the ground or the machine will move during adjustment. Make sure machine is supported so it will not accidentally fall injuring anyone under machine.

3. Loosen locknut on traction adjustment cam.

Warning

Engine must be running so final adjustment of the traction adjustment cam can be performed. To guard against possible personal injury, keep hands, feet, face and other parts of the body away from the muffler, other hot parts of the engine, and other rotating parts.

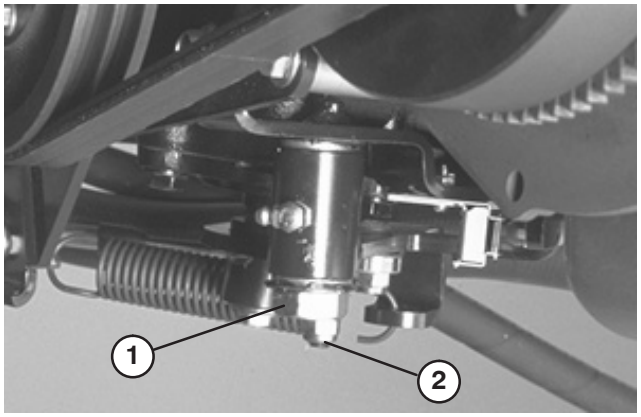

Figure 69

1. Traction adjustment cam
2. Locknut

4. Start engine and rotate cam hex in both directions to determine mid position of neutral span.
5. Tighten locknut securing adjustment.
6. Stop the engine.
7. Remove support blocks and lower the machine to the shop floor. Test drive the machine to make sure it does not creep.

Adjusting Parking Brake

Check adjustment every 200 hours.

1. Loosen set screw securing knob to parking brake lever.
2. Rotate knob until a force of 30–40 lbs. is required to actuate lever.
3. Tighten set screw after adjustment has been attained.

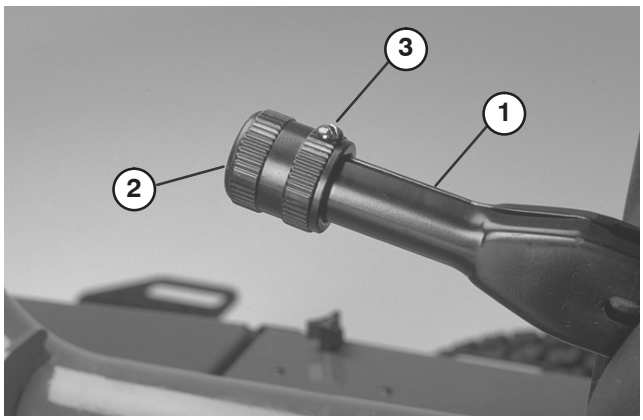

Figure 70

1. Parking brake lever
2. Knob
3. Set screw

Battery Care

Warning

CALIFORNIA

Proposition 65 Warning

Battery posts, terminals, and related accessories contain lead and lead compounds, chemicals known to the State of California to cause cancer and reproductive harm. ***Wash hands after handling*****.**

1. Battery electrolyte level must be properly maintained and the top of the battery kept clean. If the machine is stored in a location where temperatures are extremely high, the battery will run down more rapidly than if the machine is stored in a location where temperatures are cool.
2. Check the electrolyte level every 25 operating hours or, if machine is in storage, every 30 days.
3. Maintain cell level with distilled or demineralized water. Do not fill cells above the bottom of the split ring inside each cell. Install filler caps with vents pointing to the rear (toward fuel tank).

Caution

Wear safety goggles and rubber gloves when working with electrolyte. Charge the battery in a well ventilated place so gasses produced while charging can dissipate. Since the gases are explosive, keep open flames and electrical spark away from the battery; do not smoke. Nausea may result if the gases are inhaled. Unplug charger from electrical outlet before connecting to or disconnecting charger leads from battery posts.

4. Keep top of battery clean by washing periodically with a brush dipped in ammonia or bicarbonate of soda solution. Flush the top surface with water after cleaning. Do not remove the fill caps while cleaning.
5. Battery cables must be tight on terminals to provide good electrical contact.

Warning

Connecting cables to the wrong post could result in personal injury and/or damage to the electrical system.

6. If corrosion occurs at terminals, disconnect cables, negative (—) cable first and scrape clamps and terminals separately. Reconnect cables, positive (+) cable first and coat terminals with petroleum jelly.
7. Always disconnect battery cables, ground cable (—) first, to prevent possible wiring damage from short outs whenever working with the electrical system.

Battery Storage

If the machine will be stored more than 30 days, remove the battery and charge it fully. Either store it on the shelf on the machine. Leave the cables disconnected if stored on the machine. Store the battery in a cool atmosphere to avoid quick deterioration of the charge in the battery. To prevent battery from freezing, make sure it is fully charged. The specific gravity of a fully charged battery is 1.265 – 1.299.

Fuses

The fuses in machines electrical system are located under console cover.

Backlapping

Danger

TO AVOID PERSONAL INJURY OR DEATH:

- **Never place hands or feet in reel area while engine is running.**
- **While backlapping, reels may stall and then restart.**
- **Do not attempt to restart reels by hand or foot.**
- **Do not adjust reels while engine is running.**
- **If reel stalls, stop engine before attempting to clear reel.**

1. Position machine on a clean, level surface, lower the cutting units, stop the engine, engage parking brake and remove key from ignition switch.
2. Remove console cover to expose controls.
3. Rotate backlap knob to backlap position. Rotate reel speed knob to position 1.

Note: Seat switch is bypassed when backlap knob is in backlap position. Operator does not need to be in seat, but parking brake must be engaged or engine will not run.

Caution

Do not rotate backlap knob from mow to backlap position while engine is running as damage to reels may occur.

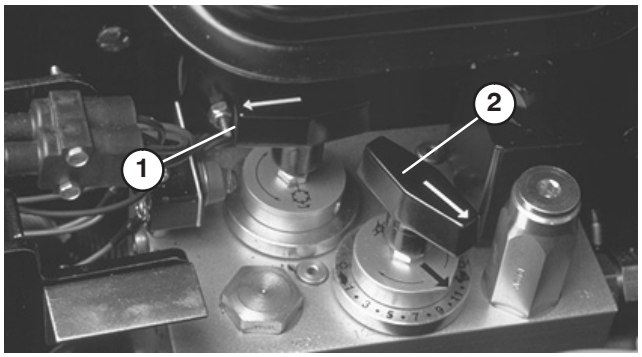

Figure 71

1. Backlap knob
2. Reel speed knob

4. Make initial reel to bedknife adjustments appropriate for backlapping on all cutting units. Start engine and set engine to low idle speed.
5. Engage reels by engaging PTO switch on control panel.
6. Apply lapping compound with long handled brush.

Caution

Be careful when lapping the reel because contact with the reel or other moving parts can result in personal injury.

7. To make an adjustment to the cutting units while backlapping, disengage reels and turn engine OFF. After adjustments have been completed, repeat steps 4–6.
8. When backlap operation is completed, stop the engine, rotate backlap knob to MOW position, set reel speed controls to desired mowing setting and wash all lapping compound off cutting units.

Note: Additional instructions and procedures on Backlapping are available in the TORO Sharpening Reel & Rotary Mowers Manual Form No. 80–300SL.

Note: For a better cutting edge, run a file across the front face of the bedknife when the lapping operation is completed. This will remove any burrs or rough edges that may have built up on the cutting edge.

Electrical Schematic

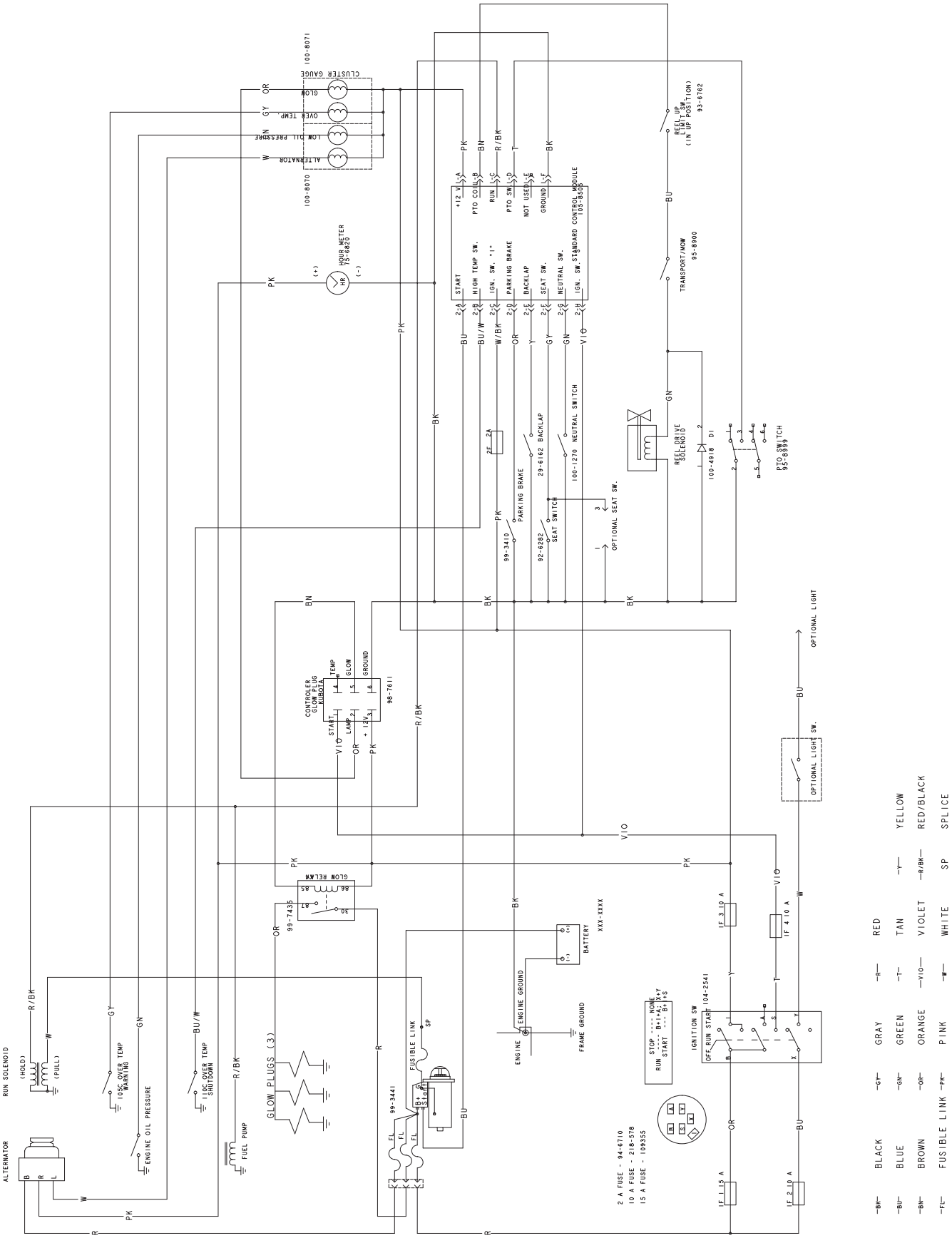

Hydraulic Schematic

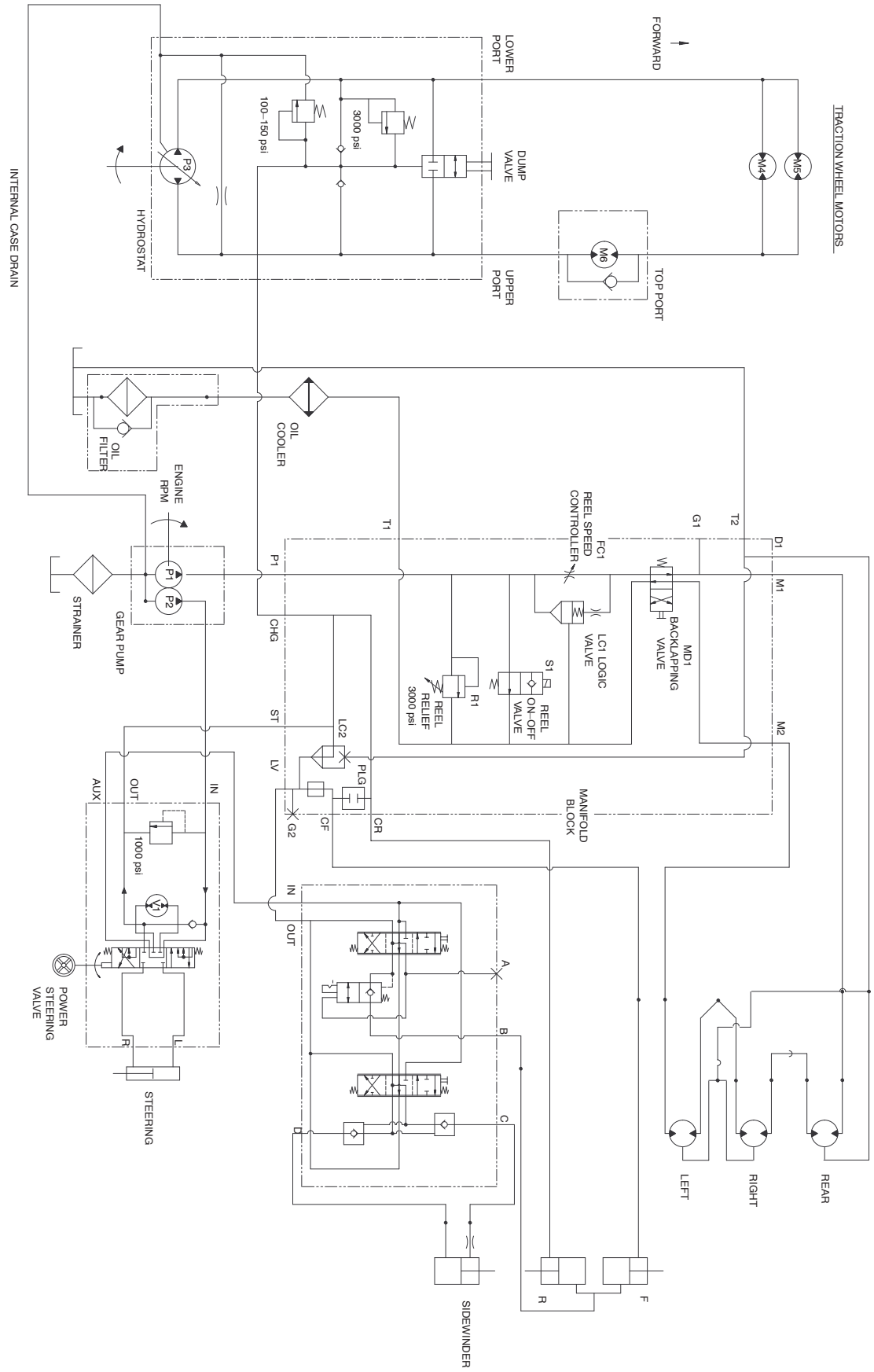

Storage

Traction Unit

- Thoroughly clean the traction unit, cutting units and the engine.
- Check the tire pressure. Inflate all tires to 14–18 psi.
- Check all fasteners for looseness; tighten as necessary.
- Grease or oil all grease fittings and pivot points. Wipe up any excess lubricant.
- Cover the entire length of the Sidewinder (Model 03201) cross tube with a light oil to prevent rust. After storage, wipe off all oil.
- Lightly sand and use touch–up paint on painted areas that are scratched, chipped, or rusted. Repair any dents in the metal body.
- Service the battery and cables as follows:
  - Remove the battery terminals from the battery posts.
  - Clean the battery, terminals, and posts with a wire brush and baking soda solution.
  - Coat the cable terminals and battery posts with Grafo 112X skin–over grease (Toro Part No. 505-47) or petroleum jelly to prevent corrosion.
  - Slowly recharge the battery every 60 days for 24 hours to prevent lead sulfation of the battery.

Engine

- Drain the engine oil from the oil pan and replace the drain plug.
- Remove and discard the oil filter. Install a new oil filter.
- Refill oil pan with motor oil.
- Start the engine and run at idle speed for approximately two minutes.
- Stop the engine.
- Thoroughly drain all fuel from the fuel tank, lines fuel filter and water separator assembly.
- Flush the fuel tank with fresh, clean diesel fuel.
- Re–secure all fuel system fittings.
- Thoroughly clean and service the air cleaner assembly.
- Seal the air cleaner inlet and the exhaust outlet with weatherproof tape.
- Check anti–freeze protection and add as needed for expected minimum temperature in your area.

The Toro General Commercial Products Warranty

A Two-Year Limited Warranty

Conditions and Products Covered

The Toro Company and its affiliate, Toro Warranty Company, pursuant to an agreement between them, jointly warrant your Toro Commercial Product ("Product") to be free from defects in materials or workmanship for two years or 1500 operational hours*, whichever occurs first. Where a warrantable condition exists, we will repair the Product at no cost to you including diagnosis, labor, parts, and transportation. This warranty begins on the date the Product is delivered to the original retail purchaser.

* Product equipped with hour meter

Instructions for Obtaining Warranty Service

You are responsible for notifying the Commercial Products Distributor or Authorized Commercial Products Dealer from whom you purchased the Product as soon as you believe a warrantable condition exists.

If you need help locating a Commercial Products Distributor or Authorized Dealer, or if you have questions regarding your warranty rights or responsibilities, you may contact us at:

Toro Commercial Products Service Department
Toro Warranty Company
8111 Lyndale Avenue South
Bloomington, MN 55420-1196
952-888-8801 or 800-982-2740
E-mail: commercial.service@toro.com

Owner Responsibilities

As the Product owner, you are responsible for required maintenance and adjustments stated in your operator's manual. Failure to perform required maintenance and adjustments can be grounds for disallowing a warranty claim.

Items and Conditions Not Covered

Not all product failures or malfunctions that occur during the warranty period are defects in materials or workmanship. This express warranty does not cover the following:

- Product failures which result from the use of non-Toro replacement parts, or from installation and use of add-on, modified, or unapproved accessories
- Product failures which result from failure to perform required maintenance and/or adjustments
- Product failures which result from operating the Product in an abusive, negligent or reckless manner
- Parts subject to consumption through use unless found to be defective. Examples of parts which are consumed, or used up, during normal Product operation include, but are not limited to, blades, reels, bedknives, tines, spark plugs, castor wheels, tires, filters, belts, and certain sprayer components such as diaphragms, nozzles, and check valves, etc.
- Failures caused by outside influence. Items considered to be outside influence include, but are not limited to, weather, storage practices, contamination, use of unapproved coolants, lubricants, additives, or chemicals, etc.
- Normal "wear and tear" items. Normal "wear and tear" includes, but is not limited to, damage to seats due to wear or abrasion, worn painted surfaces, scratched decals or windows, etc.

Parts

Parts scheduled for replacement as required maintenance are warranted for the period of time up to the scheduled replacement time for that part.

Parts replaced under this warranty become the property of Toro. Toro will make the final decision whether to repair any existing part or assembly or replace it. Toro may use factory remanufactured parts rather than new parts for some warranty repairs.

General Conditions

Repair by an Authorized Toro Distributor or Dealer is your sole remedy under this warranty.

Neither The Toro Company nor Toro Warranty Company is liable for indirect, incidental or consequential damages in connection with the use of the Toro Products covered by this warranty, including any cost or expense of providing substitute equipment or service during reasonable periods of malfunction or non-use pending completion of repairs under this warranty. Except for the Emissions warranty referenced below, if applicable, there is no other express warranty. All implied warranties of merchantability and fitness for use are limited to the duration of this express warranty.

Some states do not allow exclusions of incidental or consequential damages, or limitations on how long an implied warranty lasts, so the above exclusions and limitations may not apply to you.

This warranty gives you specific legal rights, and you may also have other rights which vary from state to state.

Note regarding engine warranty: The Emissions Control System on your Product may be covered by a separate warranty meeting requirements established by the U.S. Environmental Protection Agency (EPA) and/or the California Air Resources Board (CARB). The hour limitations set forth above do not apply to the Emissions Control System Warranty. Refer to the Engine Emission Control Warranty Statement printed in your operator's manual or contained in the engine manufacturer's documentation for details.

Countries Other than the United States or Canada

Customers who have purchased Toro products exported from the United States or Canada should contact their Toro Distributor (Dealer) to obtain guarantee policies for your country, province, or state. If for any reason you are dissatisfied with your Distributor's service or have difficulty obtaining guarantee information, contact the Toro importer. If all other remedies fail, you may contact us at Toro Warranty Company.

Part No. 374-0031 Rev. C