Form No. 3353–130

TORO®

Reelmaster 5200-D/5400-D

Two-Wheel and Four-Wheel Drive Traction Units

03540—250000001 and Up
03543—250000001 and Up
03544—250000001 and Up

Operator's Manual

CE

English (EN, GB)

Warning

CALIFORNIA

Proposition 65 Warning

Diesel engine exhaust and some of its constituents are known to the State of California to cause cancer, birth defects, and other reproductive harm.

Important The engine in this product is not equipped with a spark arrester muffler. It is a violation of California Public Resource Code Section 4442 to use or operate this engine on any forest-covered, brush-covered, or grass-covered land as defined in CPRC 4126. Other states or federal areas may have similar laws.

Contents

	Page
Introduction	3
Safety	3
Safe Operating Practices	3
Toro Riding Mower Safety	5
Sound Pressure Level	6
Sound Power Level	6
Vibration Level	6
Safety and Instruction Decals	7
Specifications	12
General Specifications	12
Measurements	13
Optional Equipment	13
Setup	14
Loose Parts	14
Connecting the Battery	14
Mounting the Hood Latch	15
Replacing the Panel Fasteners	16
Checking the Tire Pressure	16
Installing the Cutting Units	16
Adjusting the Turf Compensation Spring	18
Lifted Height of Outer Front Cutting Units	18
Installing the Rear Weight	19
Before Operating	20
Checking the Engine Oil	20
Checking the Cooling System	20
Filling the Fuel Tank	21
Checking the Transmission Fluid	21
Checking the Hydraulic Fluid	22
Checking the Rear Axle Lubricant	22
Checking Reel to Bedknife Contact	23
Checking the Torque of the Wheel Nuts	23
Operation	24
Controls	24
Starting and Stopping	26
Bleeding the Fuel System	26
Setting the Reel Speed	27
Adjusting the Lift Arm Down Pressure	28
Towing the Traction Unit	28
Diagnostic Light	29
Diagnostic ACE Display	29
Checking the Interlock Switches	29
Hydraulic Valve Solenoid Functions	31
Operating Characteristics	31
Logic Chart	32
Maintenance	33
Recommended Maintenance Schedule	33
Daily Maintenance Checklist	34
Service Interval Chart	35
Greasing the Bearing and Bushings	35
General Air Cleaner Maintenance	37
Servicing the Precleaner Bowl	37
Servicing the Air Cleaner	37
Engine Oil and Filter	38
Servicing the Fuel System	38
Bleeding Air from the Injectors	39
Servicing the Engine Cooling System	39
Servicing the Engine Belts	40
Adjusting the Throttle	40
Changing the Hydraulic Fluid	41
Replacing the Hydraulic Filter	41
Checking the Hydraulic Lines and Hoses	42
Hydraulic System Test Ports	42
Adjusting the Traction Drive for Neutral	42
Adjusting the Cutting Unit Lift Rate	43
Checking and Adjusting the Traction Linkage	44
Adjusting the Service Brakes	44
Changing the Transmission Fluid	44
Replacing the Transmission Filter	45
Changing the Rear Axle Lubricant	45
Adjusting Rear Wheel Toe-In	45
Servicing the Battery	46
Fuses	47
Optional Lighting	47
Backlapping the Cutting Units	47
Electrical Schematic	49
Hydraulic Schematic	50
Preparation for Seasonal Storage	51
The Toro General Commercial Products Warranty	52

© 2005 by The Toro Company

8111 Lyndale Avenue South
Bloomington, MN 55420-1196

All Rights Reserved

Printed in the USA

Introduction

Read this manual carefully to learn how to operate and maintain your product properly. The information in this manual can help you and others avoid injury and product damage. Although Toro designs and produces safe products, you are responsible for operating the product properly and safely.

Whenever you need service, genuine Toro parts, or additional information, contact an Authorized Service Dealer or Toro Customer Service and have the model and serial numbers of your product ready. The model and serial number is on a plate that is mounted on the left side of the footrest.

Write the product model and serial numbers in the space below:

Model No. _____

Serial No. _____

This manual identifies potential hazards and has special safety messages that help you and others avoid personal injury and even death. ***Danger***, ***Warning***, and ***Caution*** are signal words used to identify the level of hazard. However, regardless of the hazard, be extremely careful.

Danger signals an extreme hazard that *will* cause serious injury or death if you do not follow the recommended precautions.

Warning signals a hazard that *may* cause serious injury or death if you do not follow the recommended precautions.

Caution signals a hazard that may cause minor or moderate injury if you do not follow the recommended precautions.

This manual uses two other words to highlight information. **Important** calls attention to special mechanical information and **Note:** emphasizes general information worthy of special attention.

Safety

This machine meets or exceeds CEN standard EN 836:1997, ISO standard 5395:1990, and ANSI B71.4-1999 specifications in effect at time of production, when ballast is installed according to the chart on page 19.

Improper use or maintenance by the operator or owner can result in injury. To reduce the potential for injury, comply with these safety instructions and always pay attention to the safety alert ⚠ symbol, which means CAUTION, WARNING, or DANGER—"personal safety instruction." Failure to comply with the instruction may result in personal injury or death.

Safe Operating Practices

The following instructions are from the CEN standard EN 836:1997, ISO standard 5395:1990, and ANSI B71.4-1999.

Training

- Read the operator's manual and other training material carefully. Be familiar with the controls, safety signs, and the proper use of the equipment.
- Never allow children or people unfamiliar with these instructions to use or service the mower. Local regulations may restrict the age of the operator.
- Never mow while people, especially children, or pets are nearby.
- Keep in mind that the operator or user is responsible for accidents or hazards occurring to other people or their property.
- Do not carry passengers.
- All drivers and mechanics should seek and obtain professional and practical instruction. The owner is responsible for training the users. Such instruction should emphasize:
  - the need for care and concentration when working with ride-on machines;
  - control of a ride-on machine sliding on a slope will not be regained by the application of the brake. The main reasons for loss of control are:
    - insufficient wheel grip;
    - being driven too fast;
    - inadequate braking;
    - the type of machine is unsuitable for its task;
    - lack of awareness of the effect of ground conditions, especially slopes;
    - incorrect hitching and load distribution.
- The owner/user can prevent and is responsible for accidents or injuries occurring to himself or herself, other people, or property.

Preparation

- While mowing, always wear substantial footwear, long trousers, hard hat, safety glasses, and ear protection. Long hair, loose clothing, or jewelry may get tangled in moving parts. Do not operate the equipment when barefoot or wearing open sandals.
- Thoroughly inspect the area where the equipment is to be used and remove all objects which may be thrown by the machine.
- **Warning**—Fuel is highly flammable. Take the following precautions:
  - Store fuel in containers specifically designed for this purpose.
  - Refuel outdoors only and do not smoke while refuelling.
  - Add fuel before starting the engine. Never remove the cap of the fuel tank or add fuel while the engine is running or when the engine is hot.
  - If fuel is spilled, do not attempt to start the engine but move the machine away from the area of spillage and avoid creating any source of ignition until fuel vapors have dissipated.
  - Replace all fuel tanks and container caps securely.
- Replace faulty silencers/mufflers.
- Evaluate the terrain to determine what accessories and attachments are needed to properly and safely perform the job. Only use accessories and attachments approved by the manufacturer.
- Check that operator's presence controls, safety switches and shields are attached and functioning properly. Do not operate unless they are functioning properly.

Operation

- Do not operate the engine in a confined space where dangerous carbon monoxide fumes can collect.
- Mow only in daylight or in good artificial light.
- Before attempting to start the engine, disengage all blade attachment clutches, shift into neutral, and engage the parking brake.
- Remember there is no such thing as a safe slope. Travel on grass slopes requires particular care. To guard against overturning:
  - do not stop or start suddenly when going up or downhill;
  - engage clutch slowly, always keep machine in gear, especially when travelling downhill;
  - machine speeds should be kept low on slopes and during tight turns;
  - stay alert for humps and hollows and other hidden hazards;
  - never mow across the face of the slope, unless the mower is designed for this purpose.
- Stay alert for holes in the terrain and other hidden hazards.
- Use care when pulling loads or using heavy equipment.
  - Use only approved drawbar hitch points.
  - Limit loads to those you can safely control.
  - Do not turn sharply. Use care when reversing.
  - Use counterweight(s) or wheel weights when suggested in the operator's manual.
- Watch out for traffic when crossing or near roadways.
- Stop the blades rotating before crossing surfaces other than grass.
- When using any attachments, never direct discharge of material toward bystanders nor allow anyone near the machine while in operation.
- Never operate the machine with damaged guards, shields, or without safety protective devices in place. Be sure all interlocks are attached, adjusted properly, and functioning properly.
- Do not change the engine governor settings or overspeed the engine. Operating the engine at excessive speed may increase the hazard of personal injury.
- Before leaving the operator's position:
  - stop on level ground;
  - disengage the power take-off and lower the attachments;
  - change into neutral and set the parking brake;
  - stop the engine and remove the key.
- Disengage drive to attachments when transporting or not in use.
- Stop the engine and disengage drive to attachment
  - before refuelling;
  - before removing the grass catcher/catchers;
  - before making height adjustment unless adjustment can be made from the operator's position.
  - before clearing blockages;
  - before checking, cleaning or working on the mower;
  - after striking a foreign object or if an abnormal vibration occurs. Inspect the mower for damage and make repairs before restarting and operating the equipment.

- Reduce the throttle setting during engine run-out and, if the engine is provided with a shut-off valve, turn the fuel off at the conclusion of mowing.
- Keep hands and feet away from the cutting units.
- Look behind and down before backing up to be sure of a clear path.
- Slow down and use caution when making turns and crossing roads and sidewalks. Stop cylinders/reels if not mowing.
- Do not operate the mower under the influence of alcohol or drugs
- Use care when loading or unloading the machine into a trailer or truck
- Use care when approaching blind corners, shrubs, trees, or other objects that may obscure vision.

Maintenance and Storage

- Keep all nuts, bolts and screws tight to be sure the equipment is in safe working condition.
- Never store the equipment with fuel in the tank inside a building where fumes may reach an open flame or spark.
- Allow the engine to cool before storing in any enclosure.
- To reduce the fire hazard, keep the engine, silencer/muffler, battery compartment and fuel storage area free of grass, leaves, or excessive grease.
- Check the grass catcher frequently for wear or deterioration.
- Keep all parts in good working condition and all hardware and hydraulic fittings tightened. Replace all worn or damaged parts and decals.
- If the fuel tank has to be drained, do this outdoors.
- Be careful during adjustment of the machine to prevent entrapment of the fingers between moving blades and fixed parts of the machine.
- On multi-cylinder/multi-reel machines, take care as rotating one cylinder/reel can cause other cylinders/reels to rotate.
- Disengage drives, lower the cutting units, set parking brake, stop engine and remove key and disconnect spark plug wire. Wait for all movement to stop before adjusting, cleaning or repairing.
- Clean grass and debris from cutting units, drives, silencers/mufflers, and engine to help prevent fires. Clean up oil or fuel spillage.
- Use jack stands to support components when required.
- Carefully release pressure from components with stored energy.
- Disconnect battery and remove spark plug wire before making any repairs. Disconnect the negative terminal first and the positive last. Reconnect positive first and negative last.
- Use care when checking the cylinders/reels. Wear gloves and use caution when servicing them.
- Keep hands and feet away from moving parts. If possible, do not make adjustments with the engine running.
- Charge batteries in an open well ventilated area, away from spark and flames. Unplug charger before connecting or disconnecting from battery. Wear protective clothing and use insulated tools.

Toro Riding Mower Safety

The following list contains safety information specific to Toro products or other safety information that you must know that is not included in the CEN, ISO, or ANSI standard.

This product is capable of amputating hands and feet and throwing objects. Always follow all safety instructions to avoid serious injury or death.

Use of this product for purposes other than its intended use could prove dangerous to user and bystanders.

Warning

Engine exhaust contains carbon monoxide, which is an odorless, deadly poison that can kill you.

Do not run engine indoors or in an enclosed area.

- Know how to stop the engine quickly.
- Do not operate the machine while wearing tennis shoes or sneakers.
- Wearing safety shoes and long pants is advisable and required by some local ordinances and insurance regulations.
- Handle fuel carefully. Wipe up any spills.
- Check the safety interlock switches daily for proper operation. If a switch should fail, replace the switch before operating the machine. After every two years, replace all four interlock switches in the safety system, whether they are working properly or not.
- Before starting the engine, sit on the seat.
- Using the machine demands attention. To prevent loss of control:

  - Do not drive close to sand traps, ditches, creeks, or other hazards.
  - Reduce speed when making sharp turns. Avoid sudden stops and starts.
  - When near or crossing roads, always yield the right-of-way.
  - Apply the service brakes when going downhill to keep forward speed slow and to maintain control of the machine.
- The grass baskets must be in place during operation of the cylinders/reels or thatchers for maximum safety. Shut the engine off before emptying the baskets.
- Raise the cutting units when driving from one work area to another.
- Do not touch the engine, silencer/muffler, or exhaust pipe while the engine is running or soon after it has stopped because these areas could be hot enough to cause burns.
- Stay clear of the rotating screen at the side of the engine to prevent direct contact with your body or clothing.
- If the engine stalls or loses headway and cannot make it to the top of a slope, do not turn the machine around. Always back slowly, straight down the slope.
- When a person or pet appears unexpectedly in or near the mowing area, **stop mowing.** Careless operation, combined with terrain angles, ricochets, or improperly positioned guards can lead to thrown object injuries. Do not resume mowing until the area is cleared.

Maintenance and Storage

- Make sure all hydraulic line connectors are tight and all hydraulic hoses and lines are in good condition before applying pressure to the system.
- Keep your body and hands away from pin hole leaks or nozzles that eject hydraulic fluid under high pressure. Use paper or cardboard, not your hands, to search for leaks. Hydraulic fluid escaping under pressure can have sufficient force to penetrate the skin and cause serious injury. Seek immediate medical attention if fluid is injected into skin.
- Before disconnecting or performing any work on the hydraulic system, all pressure in the system must be relieved by stopping the engine and lowering the cutting units and attachments to the ground.
- Check all fuel lines for tightness and wear on a regular basis. Tighten or repair them as needed.
- If the engine must be running to perform a maintenance adjustment, keep hands, feet, clothing, and any parts of the body away from the cutting units, attachments, and any moving parts, especially the screen at the side of the engine. Keep everyone away.
- To ensure safety and accuracy, have an Authorized Toro Distributor check the maximum engine speed with a tachometer. Maximum governed engine speed should be 2900 RPM.
- If major repairs are ever needed or if assistance is desired, contact an Authorized Toro Distributor.
- Use only Toro-approved attachments and replacement parts. The warranty may be voided if used with unapproved attachments.

Sound Pressure Level

This unit has an equivalent continuous A-weighted sound pressure at the operator ear of: 88 dB(A), based on measurements of identical machines per procedures outlined in Directive 98/37/EC and amendments.

Sound Power Level

This unit has a guaranteed sound power level of: 105 dBA/1 pW, based on measurements of identical machines per Directive 2000/14/EC and amendments.

Vibration Level

This unit does not exceed a vibration level of 2.5 m/s^2 at the hands based on measurements of identical machines per ISO 5349 procedures.

This unit does not exceed a vibration level of 0.5 m/s^2 at the posterior based on measurements of identical machines per ISO 2631 procedures.

Safety and Instruction Decals

Safety decals and instructions are easily visible to the operator and are located near any area of potential danger. Replace any decal that is damaged or lost.

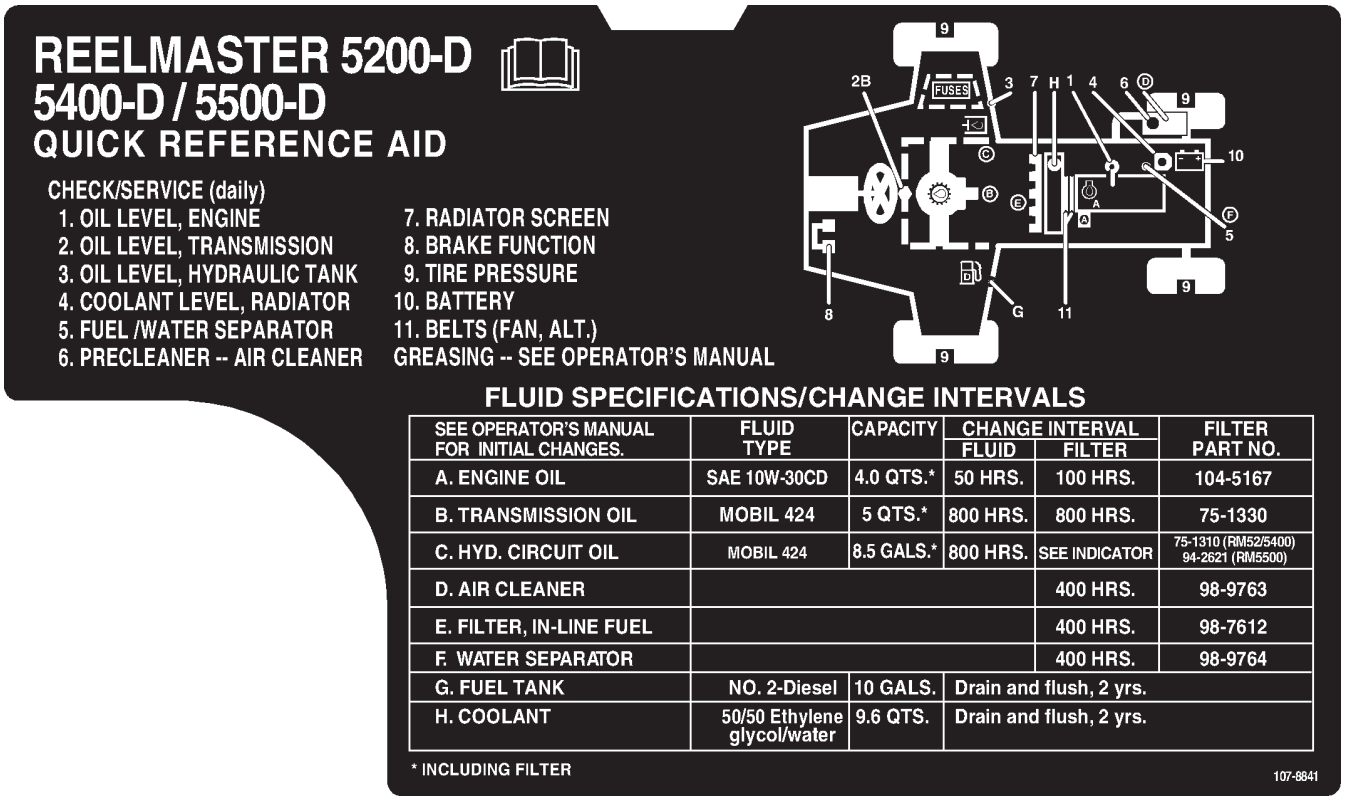

107-8841

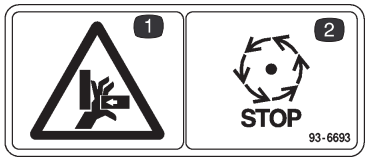

93-6693

1. Hazard to hands–pinch points
2. Stop reels before touching



104-2052

1. See operator's manual

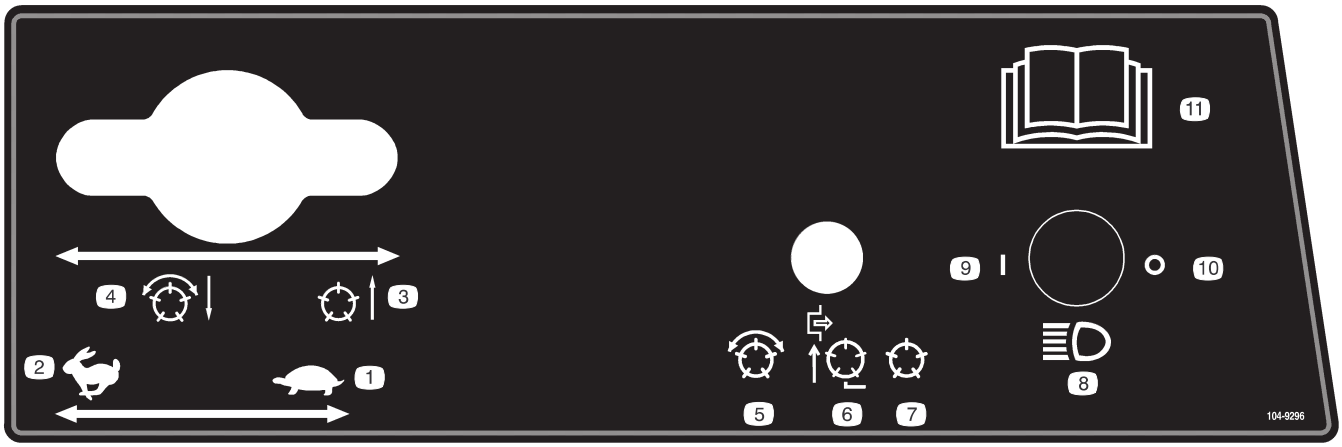

104-9296

1. Throttle—slow
2. Throttle—fast
3. Reels raised & off
4. Reels lowered and on when enabled—forward and backlap
5. Reels—enabled
6. Reels disabled—lift only
7. Reels disabled—lift and lower
8. Headlights (optional)
9. Headlights—on
10. Headlights—off
11. Read operator's manual



104-9298

1. Read operator's manual

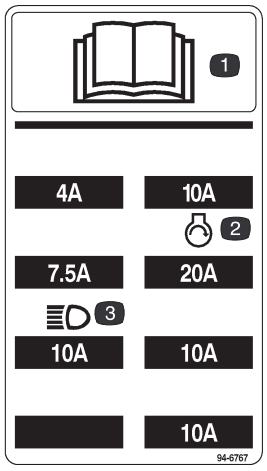

94-6767

1. Read operator's manual
2. Engine start
3. Headlights (Optional)

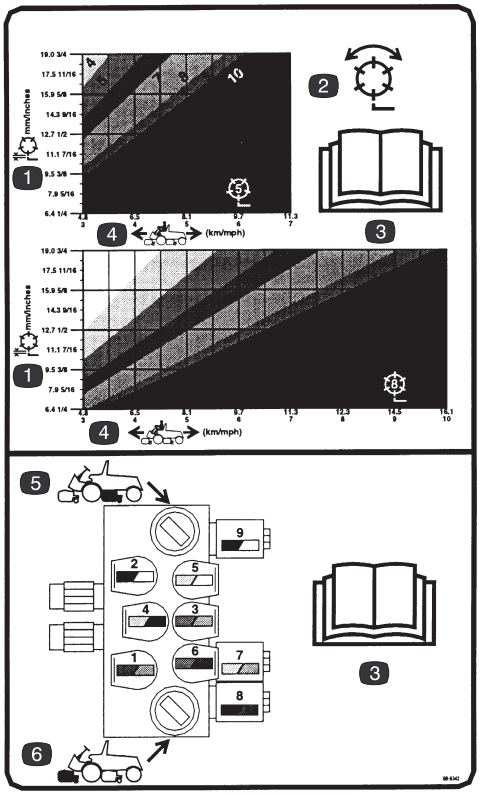

98-9342

1. Height–of–cut
2. Mow and backlap
3. Read operator's manual
4. Traction unit speed
5. Rear reels circuit controls
6. Front reels circuit controls

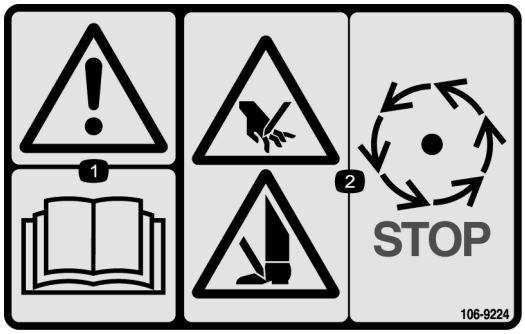

106-9224

1. Warning—read the *Operator's Manual*.
2. Cutting hazard of hand and foot—stop the reels before touching.

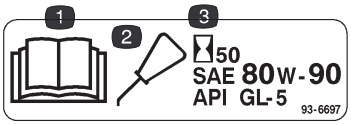

93-6697
(Model 03544 only)

1. Read operator's manual
2. Lubrication point
3. Time interval

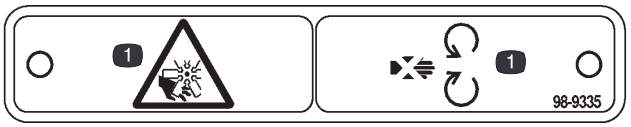

98-9335

1. Cutting dismemberment hazard–stay away from moving parts



93-6696

1. Danger–spring loaded device
2. Read operator's manual

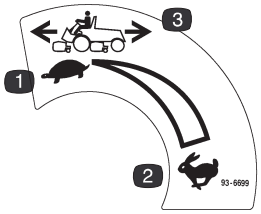

93-6699

1. Slow
2. Fast
3. Traction speed



93-6691

1. Read operator's manual–eccentric bolt

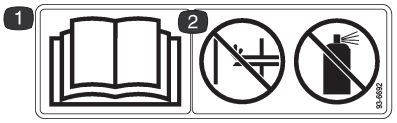

93-6692

1. Read operator's manual
2. Do not prime engine
3. Do not use starting fluid

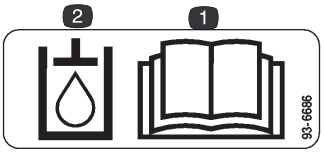

93-6686

1. Hydraulic oil level
2. Read operator's manual

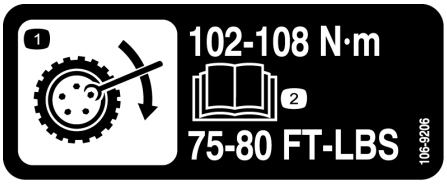

106-9206

1. Wheel torque specifications
2. Read the *Operator's Manual.*



93-6680

1. Diesel fuel

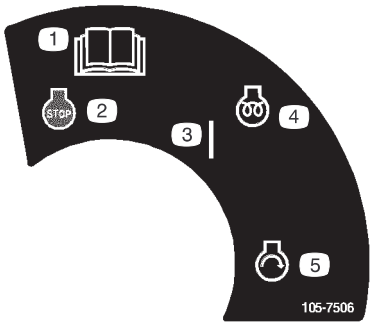

105-7506

1. Read the *Operator's Manual*
2. Engine—stop
3. On
4. Engine—preheat
5. Engine—start

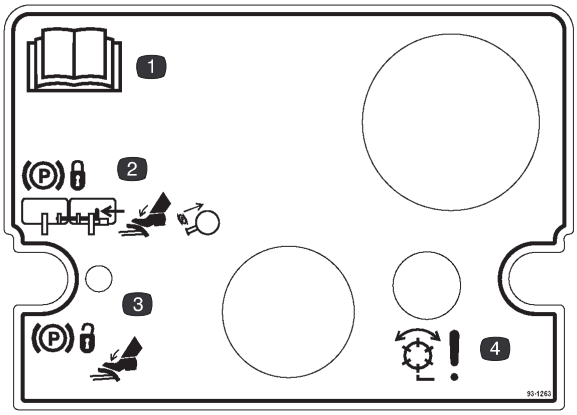

93-1263

1. Read operator's manual
2. To engage parking brake–connect pedals with locking pin, push down on both pedals and pull parking brake latch out.
3. To release parking brake–press both pedals until parking brake latch retracts.
4. Danger –reels enabled

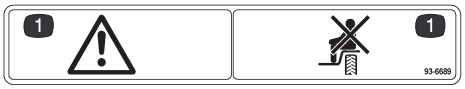

93-6689

1. Danger—no riders



Battery Symbols

Some or all of these symbols are on your battery.

1. Explosion hazard
2. No fire, open flames, or smoking.
3. Caustic liquid/chemical burn hazard
4. Wear eye protection
5. Read the *Operator's Manual.*
6. Keep bystanders a safe distance from the battery.
7. Wear eye protection; explosive gases can cause blindness and other injuries
8. Battery acid can cause blindness or severe burns.
9. Flush eyes immediately with water and get medical help fast.
10. Contains lead; do not discard.

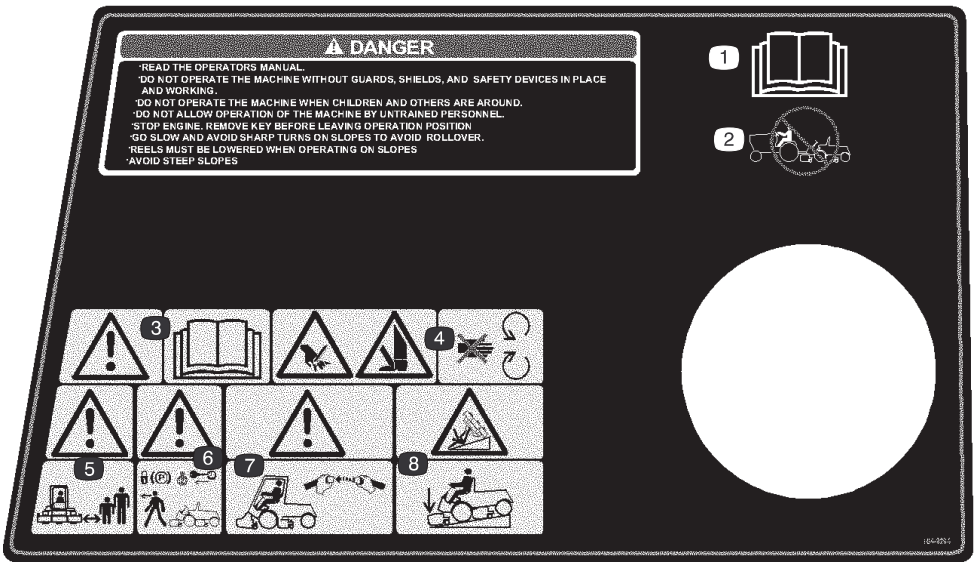

104-9294

1. Read the *Operator's Manual.*
2. Do not tow the machine.
3. Warning—read the *Operator's Manual.*
4. Cutting hazard of hand or foot—stay away from moving parts.
5. Warning—keep bystanders a safe distance from the machine.
6. Warning—lock the parking brake, stop the engine, and remove the ignition key before leaving the machine.
7. Warning—use a roll over protection system and wear the seat belt.
8. Tipping hazard—lower the cutting unit when driving down slopes.

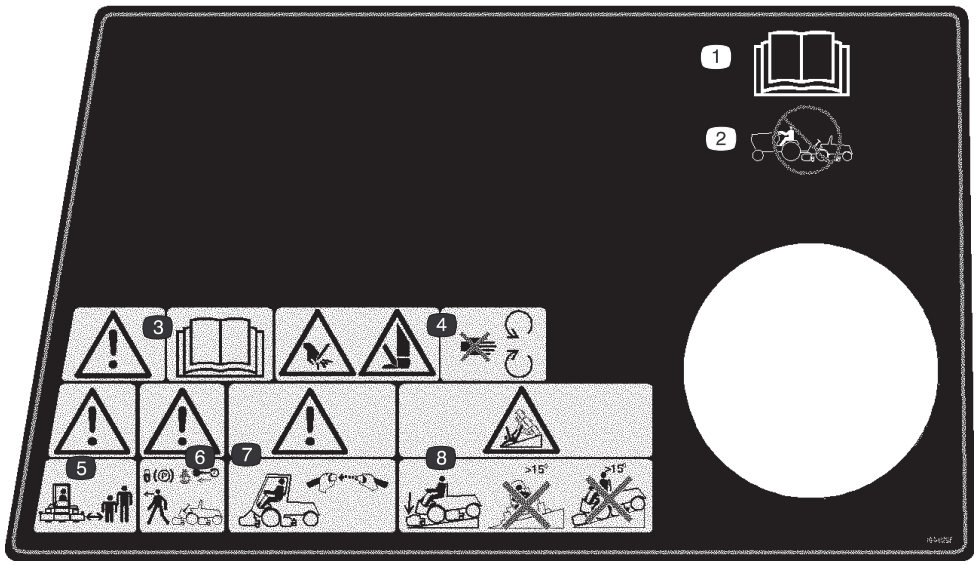

104-9295
(Cover 104–9296 for CE)

1. Read the *Operator's Manual.*
2. Do not tow the machine.
3. Warning—read the *Operator's Manual.*
4. Cutting hazard of hand or foot—stay away from moving parts.
5. Warning—keep bystanders a safe distance from the machine.
6. Warning—lock the parking brake, stop the engine, and remove the ignition key before leaving the machine.
7. Warning—use a roll over protection system and wear the seat belt.
8. Tipping hazard—lower the cutting unit when driving down slopes and do not drive across or down slopes greater than 15 degrees.

Specifications

General Specifications

Engine	Kubota three cylinder, 4 cycle liquid cooled diesel engine. 25 hp @ 3000 rpm for Reelmaster 5200 and 31.5 hp @ 3000 rpm for Reelmaster 5400. Both governed to 3200 rpm. 68.5 cu. in. (1123 cc) displacement. Heavy duty, 3-stage, remote mounted air cleaner. High water temperature shutdown switch.
Cooling System	Radiator capacity is approximately 7-1/2 qt. of 50/50 mixture of ethylene glycol anti-freeze. Remote mounted 1 qt. expansion tank. A two speed fan drive controls air flow from fan.
Fuel System	Fuel tank capacity is 9.5 gal. of #2 diesel fuel. Equipped with a fuel filter/water separator to capture water in the fuel.
Traction System	Foot pedal controls forward/reverse ground speed. Ground speed: 0–10 mph forward and 0–4 reverse. Hydrostatic transmission mounted directly on a 20.9:1 ratio front axle. Axle/reservoir capacity is 5 qt. Replaceable filter mounted directly on transmission housing. Model 03544 only—mechanical rear axle is coupled to front axle by a driveshaft and overrunning clutch.
Cutting Unit Drive System	Hydraulic reel motors feature quick disconnects to ease removal/installation on cutting units. Hydraulic fluid reservoir capacity is 8 gal. System protected by a filter assembly with service indicator.
Seat	Deluxe high back seat with adjustable fore and aft travel, weight and height. Tool box at left side of seat.
Steering System	Power steering with dedicated power source
Tires	Two rear tires: 20 x 10.00-10, tubeless, 6-ply rating. Two front tires: 26.5 x 14.00-12 tubeless, 4-ply rating. Recommended tire pressure for front and rear tires is 10–15 psi.
Brakes	Individual drum type wheel brakes on front traction wheels. Brakes controlled by individual pedals operated by the left foot. Hydrostatic braking through traction drive.
Electrical System	Automotive type electrical system. 12 volt, maintenance free battery with 530 cold cranking Amps @ 0 degrees F. and 85 minute reserve capacity @ 85 degrees F. 40 amp alternator with I.C. regulator/rectifier. Seat switch, reel and traction interlock switches. An electronic controller monitors and controls safety and operational functions. Parking brake switch in steering column.
Controls	Foot operated traction and brake pedals. Hand operated throttle, traction speed control lever, parking brake lock, ignition switch with automatic preheat cycle, single joy stick control for cutting unit on/off and lift/lower. Cutting unit backlap switch and reel speed controls located under control console.
Gauges	Hour meter, speedometer, fuel gauge, temperature gauge. 4 warning lamps: oil pressure, water temperature, amps, and glow plug.
Diagnostics	The Automatic Control Electronics, ACE® system allows precise timing and control of machine functions for maximum reliability. Optional hand held diagnostic display connects to an electronic control unit to pin point any electrical problems quickly and easily. Available DATA LOG™ system allows mechanic to find intermittent problems.

Measurements

Width of Cut	95 in.
Overall Width	
Transport	87 in.
Outside of front tires	87 in.
Outside of rear tires	52-1/2 in.
Overall Length	
Without grass baskets	103-1/2 in.
With grass baskets	116 in.
Height	
Without ROPS installed	56-1/2 in.
With ROPS installed	85 in.
Recommended Height of Cut	
5 Blade Cutting Unit	1/2–3/4 in.
8 Blade Cutting Unit	1/4–5/8 in.
Weight	
Models 03540 & 03543	2320 lb.*
Model 03544	2675 lb.*

* With 8 Blade Cutting Units, baskets, and full fluid levels

Optional Equipment

Rear Roller Scraper	Part No. 104–3395
Comb Kit	Part No. 104–3385
Solid Front Roller	Part No. 82-6680
5 Blade Cutting Unit	Model No. 03527
8 Blade Cutting Unit	Model No. 03528
Rear Roller Brush Kit	Model No. 03533
Front H.O.C. Adjusting Kit	Part No. 104-8205
Wiehle Scraper Kit	Part No. 104-3380-03
Shoulder Roller Scraper Kit	Part No. 104-8208-03
3” Collar Kit	Part No. 104-8215
Shoulder Roller	Part No. 104-3369
High Height of Cut Kit	Part No. 83-5300
Grass Basket Kit	Model No. 03532
Armrest Kit	Model No. 30707
Thatching Reel	Model No. 03516
4 Wheel Drive Kit (for use with models 03540 and 03543 only)	Model No. 03539
TurfDefender® Electronic Leak Detector Kit	Model No. 03521
Rear Weight Kit	Part No. 75-6690
Rear Weight Kit—25 lb.	Part No. 98-9780
Wheel Weight Kit	Part No. 104-1478
Precleaner Bowl Extension Tube (clamp, Part No. 20-4840 required to install extension tube)	Part No. 43-3810
Diagnostic ACE	Part No. 85-4750

Specifications and design subject to change without notice.

Setup

Note: Determine the left and right sides of the machine from the normal operating position.

Loose Parts

Note: Use this chart as a checklist to ensure that all parts necessary for assembly have been received. Without these parts, total setup cannot be completed.

Description	Qty.	Use
Locking hood switch	1	Mounting locking hood latch for CE
Lock washer	1	
Nut	1	
Key	2	
Hood latch bracket	1	
Capscrew, 1/4 x 3/4 in.	2	
Flat washer, 1/4 in.	2	
Locknut, 1/4 in.	2	
Flange head capscrew, 5/16 x 5/8 in.	1	Replacing floor panel fastener for CE
Flange head capscrew, 5/16 x 3/4 in.	1	Securing access panel for CE
Hydraulic filter (transmission)	1	Change filter after first 10 hours of operation.
CE decal	1	Affix to machine.
CE certificate	2	
Service decal, blank	1	Affix to machine (International only).
Diagnostic ACE display overlay	1	Diagnosing machine (store in service shop until needed)
Video	1	View before operating the machine.
Parts catalog	1	
Operator's Manual (Traction Unit)	2	Read before operating the machine.
Engine Manual	1	

Connecting the Battery

Warning

CALIFORNIA

Proposition 65 Warning

Battery posts, terminals, and related accessories contain lead and lead compounds, chemicals known to the State of California to cause cancer and reproductive harm. ***Wash hands after handling*****.**

Warning

Connecting cables to the wrong post could result in personal injury and/or damage to the electrical system.

1. Open hood.
2. Ensure battery is securely fastened in place and check battery charge with a hydrometer. If battery needs charging, be sure at least one battery cable, preferable the positive (+) cable, is disconnected from the battery before connecting the charger (Fig. 1).

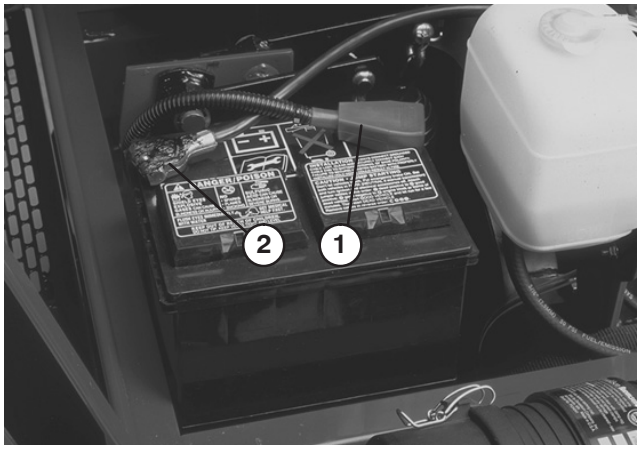

Figure 1

1. Positive battery cable
2. Negative battery cable

Warning

Charging the battery produces gasses that can explode.

Never smoke near the battery and keep sparks and flames away from the battery.

Warning

Battery terminals or metal tools could short against metal tractor components, causing sparks. Sparks can cause the battery gasses to explode, resulting in personal injury.

- **When removing or installing the battery, do not allow the battery terminals to touch any metal parts of the tractor.**
- **Do not allow metal tools to short between the battery terminals and metal parts of the tractor.**

3. Slide the red, positive battery cable onto the positive battery post and tighten nut securely.

Warning

Incorrect battery cable routing could damage the tractor and cables, causing sparks. Sparks can cause the battery gasses to explode, resulting in personal injury.

- **Always *disconnect* the negative (black) battery cable before disconnecting the positive (red) cable.**
- **Always *reconnect* the positive (red) battery cable before reconnecting the negative (black) cable.**

4. Slide the black, negative battery cable onto the negative battery post and tighten nut securely.

5. Coat both battery connections with Grafo 112X (skin over) grease, Toro Part No. 505–47, petroleum jelly or light grease to prevent corrosion and slide rubber boot over positive terminal.

6. Close hood.

Mounting the Hood Latch

1. Remove plug from hole in left front corner of hood (Fig. 2).

2. Open hood.

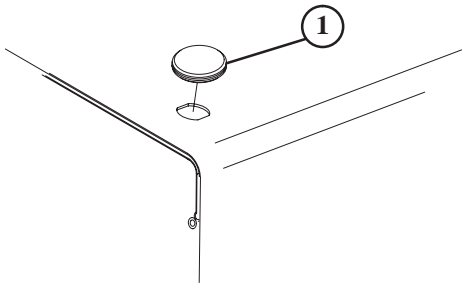

Figure 2

1. Hood plug

3. Mount locking switch to hood with lock washer and nut. Position switch with latch toward front of machine (Fig. 3).

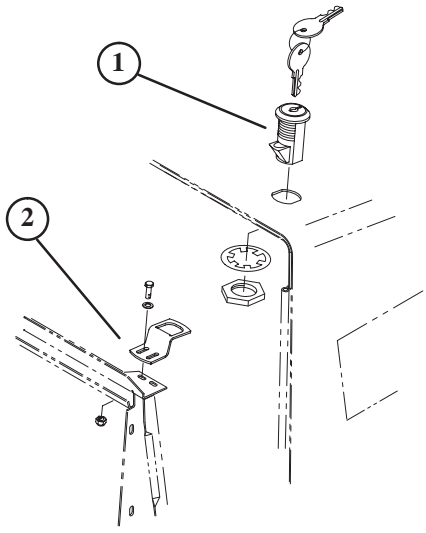

Figure 3

1. Locking switch
2. Latch bracket

4. Loosely mount latch bracket to radiator support with 2 capscrews (1/4 x 3/4 in.), flat washers, and locknuts (Fig. 3).

5. Adjust latch bracket, until aligned with switch latch, then tighten capscrews.
6. Rotate latch to locked and unlocked position with key. Remove key and store in memorable place.
7. Close hood.

Replacing the Panel Fasteners

1. Remove fasteners securing left front corner of floor panel and left end of access panel to frame (Fig. 4).

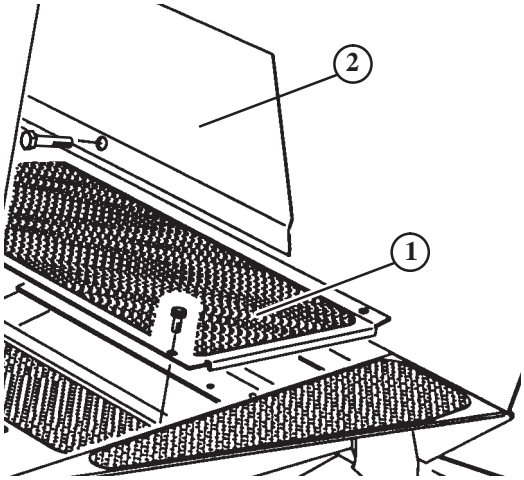

Figure 4

1. Floor panel
2. Access panel

2. Replace floor panel fastener with flange head capscrew (5/16 x 5/8 in.) supplied in loose parts (Fig. 4).
3. Replace access panel fastener with flange head capscrew (5/16 x 3/4 in.) supplied in loose parts (Fig. 4).

Checking the Tire Pressure

The tires are over-inflated for shipping. Therefore, release some of the air to reduce the pressure. Correct air pressure in the front and rear tires is 10–15 psi.

Important Maintain even pressure in all tires to ensure uniform contact with turf.

Installing the Cutting Units

1. Remove cutting units from cartons. Assemble and adjust per the Operator's Manual for the cutting unit.
2. If baskets will be installed, use chart below (Fig. 5) to determine locations at which basket guides or basket brackets must be mounted to cutting unit carrier frames. If baskets are not to be installed, proceed to step 5.

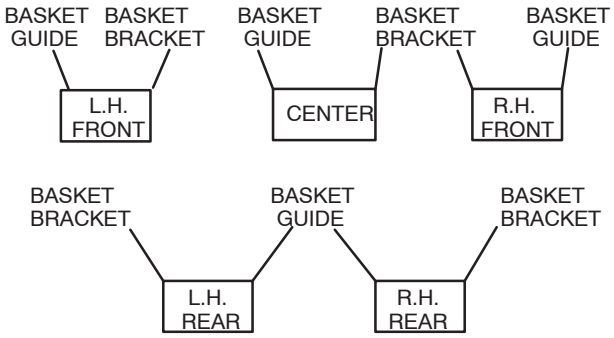

Figure 5

3. Mount a basket guide (Fig. 6) to the appropriate side of each cutting unit carrier frame (see Figure 7) with a capscrew (5/16 x 1-3/4 in.), flat washer, and lock washer or fasteners previously removed, as shown in Figure 6.

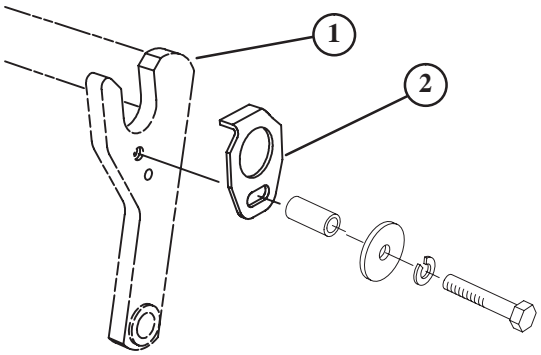

Figure 6

1. Carrier frame
2. Basket guide

4. Install a roll pin (Fig. 7) into hole in appropriate side of each cutting unit carrier frame (Fig. 5).

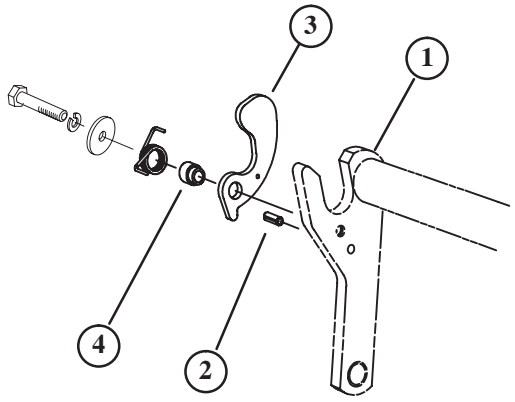

Figure 7

1. Carrier frame
2. Roll pin
3. Basket bracket
4. Basket collar

5. Align the mounting shaft of the cutting unit with the pivot tube on the carrier frame. Insert the shaft into the tube (Fig. 8).

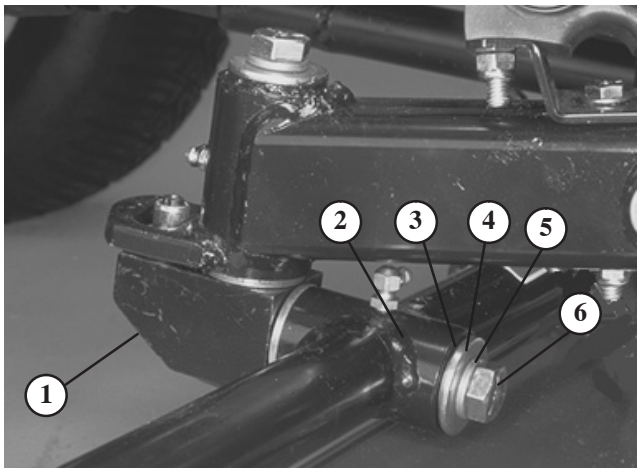

Figure 8

1. Cutting unit mounting shaft
2. Carrier frame pivot tube
3. Thrust washer
4. Flat washer
5. Lock washer
6. Capscrew

6. Secure shaft in pivot tube with a thrust washer, flat washer, lock washer, and capscrew (Fig. 8).

7. Assemble the mounting nuts for the reel drive motor to each cutting unit (Fig. 9). Leave approximately 1/2 in. of threads exposed on each mounting stud.

8. Coat the spline shaft of the motor with clean grease and install the motor by rotating the motor clockwise so the motor flanges clear the studs. Rotate the motor counterclockwise until the flanges encircle the studs and tighten the mounting nuts. Ensure that the washers are against the nuts.

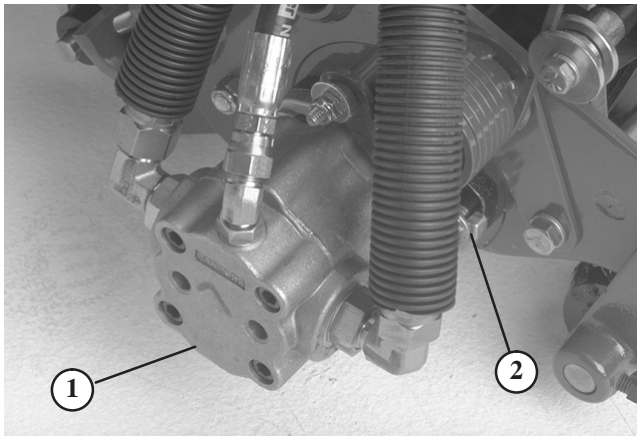

Figure 9

1. Reel drive motor
2. Mounting nuts

9. Detach chain from lift arm and secure it to cross tube on each rear cutting unit with a capscrew, flat washer, and locknut (Fig. 10).



Figure 10

1. Lock-up chain

Important Make sure that all hydraulic hoses are routed away from cutting unit so when cutting unit pivots excessive rubbing does not occur.

10. Check adjustment of lock-up rollers (Fig. 11). When properly adjusted, they will contact the lock-up levers on rear lift arms and support the cutting units when fully raised.

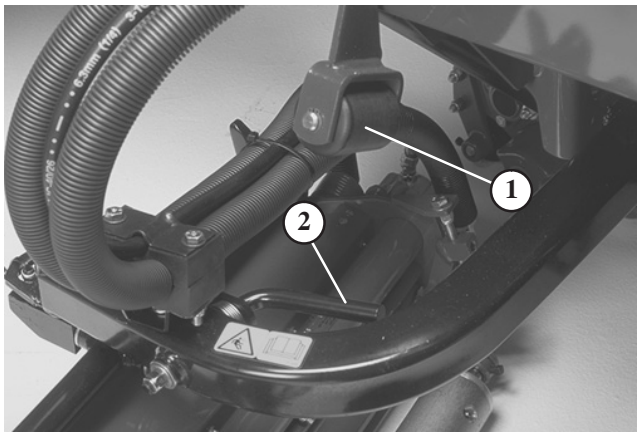

Figure 11

1. Lock-up rollers
2. Lock-up levers

11. Mount a basket to each cutting unit carrier frame by inserting basket mounting pin into basket bracket and depressing opposite mounting pin into pivoting bracket.

Adjusting the Turf Compensation Spring

Note: This adjustment is needed for Cutting Unit Models 03527 and 03528 only.

The turf compensation spring (Fig. 12), connecting carrier frame to cutting unit, controls the amount of fore-aft rotation available.

The Turf Compensation Spring also transfers weight from the front to rear roller. (This helps to reduce a wave pattern in the turf, also known as bobbing.)

Important Make spring adjustments with cutting unit mounted to traction unit and lowered to shop floor.

1. Tighten locknut on rear of spring rod until the gap (C) between rear of spring bracket and front of washer is 1.25 in. (32 mm) (Fig. 12).
2. Tighten hex nuts on front end of spring rod until the compressed length (A) of spring is 6.25 in. (328 mm) (Fig. 12).

Note: As compressed spring length (A) **decreases**, weight transfer from front roller to rear roller **increases** and carrier frame/cutting unit rotation angle (B) **decreases**.

Note: As gap (C) between spring bracket and washer **increases**, carrier frame/cutting unit rotation angle (B) **increases**.

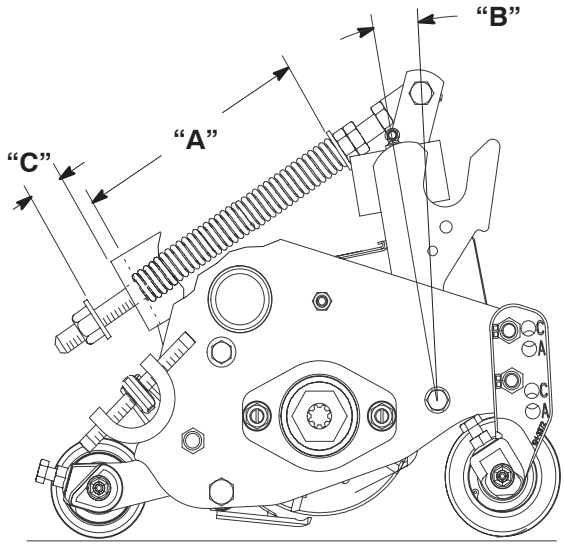

Figure 12

Lifted Height of Outer Front Cutting Units (Enable Position)

The turnaround height of the front outer cutting units (#4 & #5) may be increased to provide additional ground clearance on contoured fairways. Contact your distributor for assistance.

Note: The RM CONFIG time delay should not be changed from the original setting of 0 when using this method to adjust turn around height.

To increase the turn around height of the front cutting units proceed as follows:

- Position machine on a level surface, lower the cutting units and stop the machine.
- Loosen the carriage bolt nut securing the lift arm switch bracket to the No. 4 lift arm (left front) (Fig. 13).
- Move the lift switch bracket inward in the slot until the desired position is attained.
- Set the distance between the lift arm switch and the flag on the lift arm to approximately .062 inches.
- Tighten the carriage bolt nut.

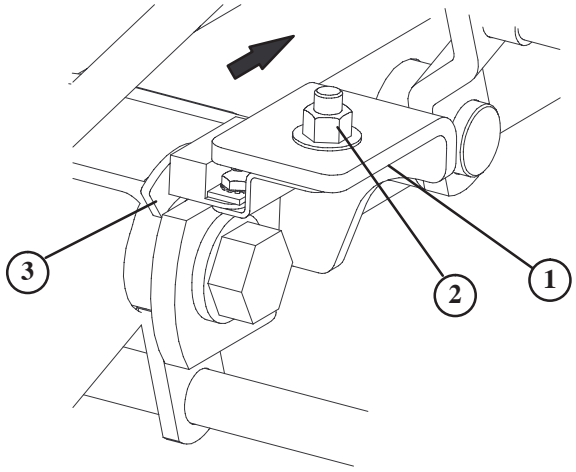

Figure 13

1. Lift arm switch
2. Carriage bolt nut
3. Lift arm flag

Installing the Rear Weight

The Reelmaster 5200-D & 5400-D Traction Units comply with CEN standard EN 836:1997, ISO standard 5395:1990, and ANSI B71.4-1999 Standards when equipped with rear weight and 90 lb. of calcium chloride ballast is added to rear wheels. Use chart below to determine combinations of weight required. Order parts from your local Authorized Toro Distributor.

	Rear Weight Required	Weight Part Number	Weight Description	Qty.
2wd Traction Unit with ROPS w/o baskets	291 lb.	75-6690	Rear Weight Kit	3
2wd Traction Unit with ROPS with baskets	358 lb.	75-6690	Rear Weight Kit	4
2wd Traction Unit w/o ROPS w/o baskets	157 lb.	75-6690	Rear Weight Kit	1
2wd Traction Unit w/o ROPS with baskets	224 lb.	75-6690	Rear Weight Kit	2
4wd Traction Unit with ROPS w/o baskets	157 lb.	75-6690	Rear Weight Kit	1
4wd Traction Unit with ROPS with baskets	249 lb.	75-6690 98-9780	Rear Weight Kit Rear Weight Kit—25 lb.	2 1

Important If a puncture occurs in a tire with calcium chloride, remove unit from turf area as quickly as possible. To prevent possible damage to turf, immediately soak affected area with water.

Before Operating

Caution

If you leave the key in the ignition switch, someone could accidently start the engine and seriously injure you or other bystanders.

Remove the key from the ignition switch and lower the cutting units to the ground before servicing or making adjustments to the machine.

Checking the Engine Oil

The engine is shipped with oil in the crankcase; however, the oil level must be checked before and after the engine is first started.

Crankcase capacity is approximately 4 qt. (2.8 l) with the filter.

Use high-quality engine oil that meets the following specifications:

API Classification Level Required: CH–4, CI–4 or higher.

Preferred oil: SAE 15W–40 (above 0° F)

Alternate oil: SAE 10W–30 or 5W–30 (all temperatures)

Toro Premium Engine oil is available from your distributor in either 15W–40 or 10W–30 viscosity. See the parts catalog for part numbers.

1. Park machine on a level surface, stop engine, and remove key from ignition switch. Open hood.
2. Remove dipstick, wipe clean, and reinstall dipstick. Remove dipstick and check oil level on dipstick; Oil level should be up to FULL mark (Reelmaster 5200—Fig. 14, Reelmaster 5400—Fig. 15).

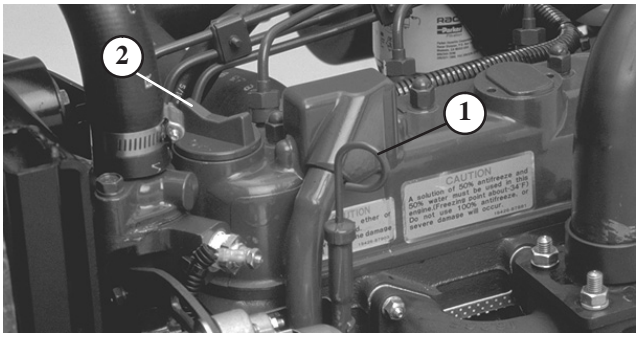

Figure 14

1. Dipstick
2. Oil fill cap

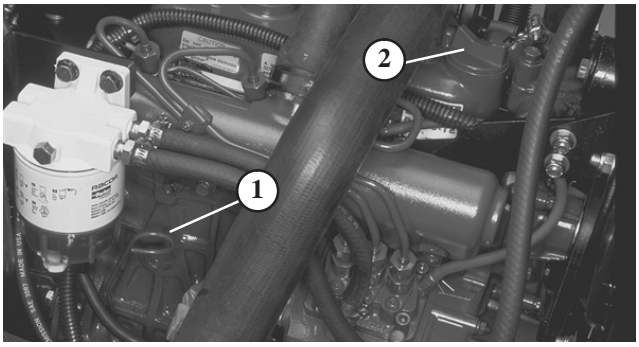

Figure 15

1. Dipstick
2. Oil fill cap

3. If oil is below FULL mark, remove fill cap and add oil until level reaches FULL mark on dipstick. **Do not overfill.**
4. Install oil fill cap and close hood.

Important Be sure to keep the engine oil level between the upper and lower limits on the oil gauge. Engine failure may occur as a result of over filling or under filling the engine oil.

Checking the Cooling System

Clean debris off screen, oil cooler and front of radiator daily, more often if conditions are extremely dusty and dirty; refer to section on Engine Cooling System.

The cooling system is filled with a 50/50 solution of water and permanent ethylene glycol anti-freeze. Check level of coolant in expansion tank at beginning of each day before starting the engine. Capacity of cooling system is 9.6 quarts.

Caution

If the engine has been running, the pressurized, hot coolant can escape and cause burns.

- **Do not open the radiator cap when the engine is running.**
- **Use a rag when opening the radiator cap, and open the cap slowly to allow steam to escape.**

1. Check level of coolant in expansion tank (Fig. 16). Coolant level should be between the marks on side of tank.



Figure 16

1. Expansion tank

2. If coolant level is low, remove expansion tank cap and replenish the system. **Do not overfill**.
3. Install expansion tank cap.

Filling the Fuel Tank

1. Remove fuel tank cap (Fig. 17).
2. Fill tank to about one inch below top tank, not filler neck with No. 2 diesel fuel. Then install cap.

Danger

Under certain conditions, diesel fuel and fuel vapors are highly flammable and explosive. A fire or explosion from fuel can burn you and others and can cause property damage.

- **Use a funnel and fill the fuel tank outdoors, in an open area, when the engine is off and is cold. Wipe up any fuel that spills.**
- **Do not fill the fuel tank completely full. Add fuel to the fuel tank until the level is 1/4 to 1/2 in. (6 to 13 mm) below the bottom of the filler neck. This empty space in the tank allows the fuel to expand.**
- **Never smoke when handling fuel, and stay away from an open flame or where fuel fumes may be ignited by a spark.**
- **Store fuel in a clean, safety-approved container and keep the cap in place.**

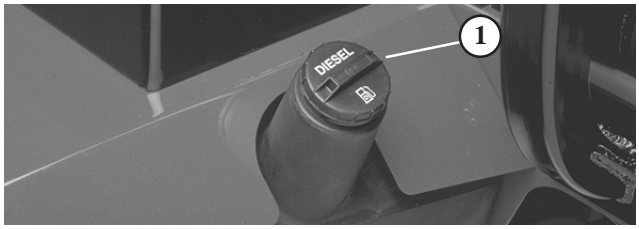

Figure 17

1. Fuel tank cap

Checking the Transmission Fluid

The front axle housing acts as the reservoir for the system. The transmission and axle housing are shipped from the factory with approximately 5 quarts of Mobil 424 hydraulic fluid. However, check level of transmission oil before engine is first started and daily thereafter.

1. Position machine on a level surface, lower the cutting units and stop the engine.
2. Remove floor panel.
3. Unscrew dipstick cap from the transmission filler neck (Fig. 18) and wipe it with a clean rag. Screw dipstick into filler neck. Remove the dipstick and check level of oil. If level is not within 1/2 inch from the groove in the dipstick, add enough oil to raise level to groove mark. **Do not overfill** by more than 1/4 inch above groove.

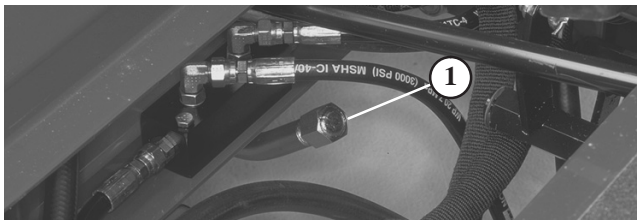

Figure 18

1. Transmission dipstick cap

4. Screw dipstick filler cap finger-tight onto filler neck. It is not necessary to tighten cap with a wrench.

Checking the Hydraulic Fluid

The machines reservoir is filled at the factory with approximately 8 gallons of high quality hydraulic fluid. **Check the level of the hydraulic fluid before the engine is first started and daily thereafter.** The recommended replacement fluid is:

Toro Premium Transmission/Hydraulic Tractor Fluid
(Available in 5 gallon pails or 55 gallon drums. See parts catalog or Toro distributor for part numbers.)

Alternate fluids: If the Toro fluid is not available, other petroleum–based Universal Tractor Hydraulic Fluids (UTHF) may be used provided its specifications fall within the listed range for all the following material properties and it meets industry standards. We do not recommend the use of synthetic fluid. Consult with your lubricant distributor to identify a satisfactory product

Note: Toro will not assume responsibility for damage caused by improper substitutions, so use only products from reputable manufacturers who will stand behind their recommendation.

Material Properties:

Viscosity, ASTM D445	cSt @ 40° C 55 to 62 cSt @ 100° C 9.1 to 9.8
Viscosity Index ASTM D2270	140 – 152
Pour Point, ASTM D97	–35° F to –46° F

Industry Specifications:
API GL–4, AGCO Powerfluid 821 XL, Ford New Holland FNHA–2–C–201.00, Kubota UDT, John Deere J20C, Vickers 35VQ25 and Volvo WB–101/BM.

Note: Many hydraulic fluids are almost colorless, making it difficult to spot leaks. A red dye additive for the hydraulic system oil is available in 2/3 oz. (20 ml) bottles. One bottle is sufficient for 4–6 gal (15–22 1) of hydraulic oil. Order part no. 44–2500 from your authorized Toro distributor.

1. Position machine on a level surface, lower the cutting units and stop the engine.
2. Clean area around filler neck and cap of hydraulic tank (Fig. 19). Remove cap from filler neck.

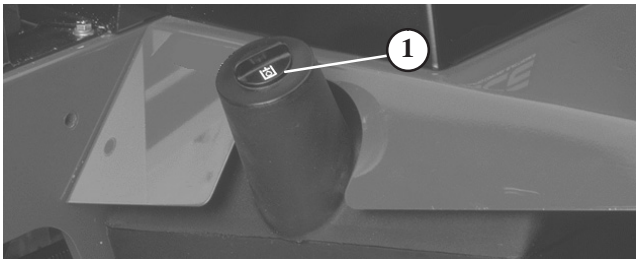

Figure 19

1. Hydraulic tank cap

3. Remove dipstick from filler neck and wipe it with a clean rag. Insert dipstick into filler neck; then remove it and check level of fluid. Fluid level should be within 1/4 inch of mark on dipstick.
4. If level is low, add appropriate fluid to raise level to full mark.
5. Install dipstick and cap onto filler neck.

Checking the Rear Axle Lubricant

Note: This procedure is for Model 03544 only.

The rear axle has three separate reservoirs which use SAE 80W-90 wt. gear lube. Although the axle is shipped with lubricant from the factory, check the level before operating the machine.

1. Position the machine on a level surface.
2. Remove the 3 check plugs from axle (Fig. 20 and 21) and make sure lubricant is up to bottom of each hole.

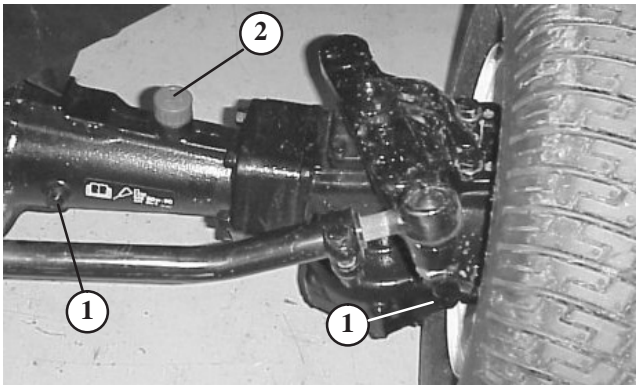

Figure 20

1. Check plug
2. Fill plug

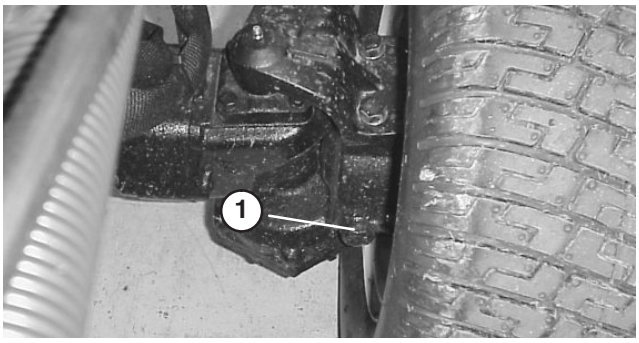

Figure 21

1. Left check plug (rear of axle)

3. If level is low, remove center fill plug and add enough lubricant to bring the level up to the bottom of the center check plug hole.

4. Remove each end check plug and add enough lubricant to bring the level up to the bottom of each check plug hole.

5. Install all plugs.

Checking Reel to Bedknife Contact

Each day before operating, check reel to bedknife contact, regardless if quality of cut had previously been acceptable. There must be light contact across the full length of the reel and bedknife (refer to Adjusting Reel to Bedknife in Cutting Unit Operator's Manual).

Checking the Torque of the Wheel Nuts

Warning

Failure to maintain proper torque of the wheel nuts could result in personal injury.

Torque the wheel nuts to 75–80 ft.-lb. after 1–4 hours of operation and again after 10 hours of operation. Torque every 250 hours thereafter.

Operation

Note: Determine the left and right sides of the machine from the normal operating position.

Caution

If you leave the key in the ignition switch, someone could accidently start the engine and seriously injure you or other bystanders.

Remove the key from the ignition switch and lower the cutting units to the ground before servicing or making adjustments to the machine.

Controls

Seat

The seat adjusting lever (Fig. 22) allows 4 inch fore and aft adjustment. Seat adjusting knob (Fig. 22) adjusts seat for operators weight. To adjust seat fore and aft, pull lever on left side of seat assembly outward. After moving seat to desired location, release lever to lock seat into position. To adjust for operators weight, turn spring tension knob; clockwise to increase tension, counterclockwise to decrease spring tension.

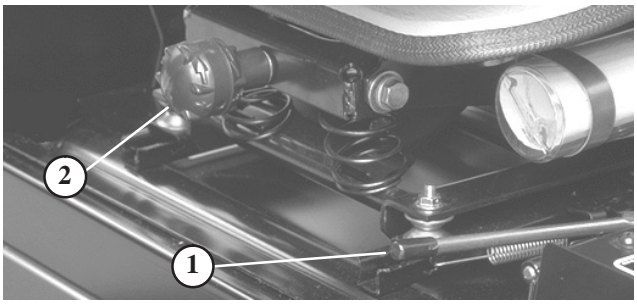

Figure 22

1. Seat adjusting lever
2. Seat adjusting knob

Traction Pedal

The traction pedal (Fig. 23) controls forward and reverse operation. Depress top of pedal to move forward and bottom to move backward. Ground speed depends on how far pedal is depressed. For no load, maximum ground speed, fully depress pedal while throttle is in FAST.

To stop, reduce foot pressure on traction pedal and allow it to return to center position.



Figure 23

1. Traction pedal

Traction Speed Limiter

Preset this lever (Fig. 24) to limit the amount the traction pedal can be depressed in the forward direction to maintain a constant mowing speed.

Reel Control Light

The light (Fig. 24) illuminates when glow is preheating or blinks when their is a control system problem.

Speedometer

The speedometer (Fig. 24) indicates ground speed at which machine is traveling.

Brake Pedals

Two foot pedals (Fig. 24) operate individual wheel brakes for turning assistance, parking, and to aid in obtaining better sidehill traction. Locking pin connects the pedals for parking brake operation and transport.

Parking Brake Latch

A knob on the left side of console (Fig. 24) actuates parking brake lock. To engage parking brake, connect pedals with locking pin, push down on both pedals and pull parking brake latch out. To release parking brake, depress both pedals until parking brake latch retracts.

Key Switch

The key switch (Fig. 24) has three positions: OFF, ON/Preheat, and START.

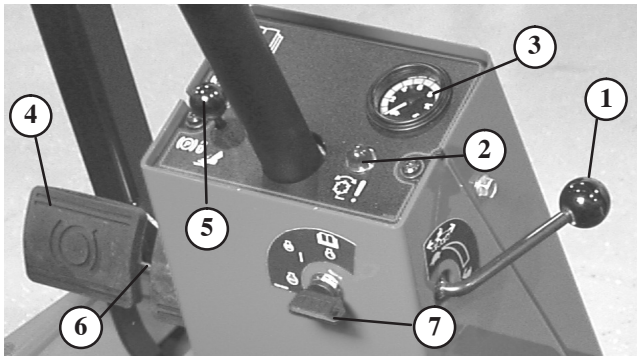

Figure 24

1. Traction speed limiter
2. Reel control light
3. Speedometer
4. Brake pedals
5. Parking brake latch
6. Locking pin
7. Key switch

Engine Coolant Temperature Warning Light

The light (Fig. 25) illuminates and engine shuts down when coolant reaches a dangerously high temperature.

Throttle Control

Move control (Fig. 25) forward to increase engine speed, rearward to decrease speed.

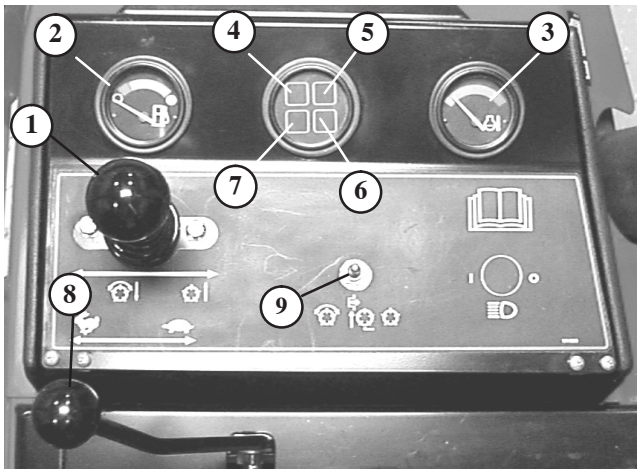

Figure 25

1. Lower mow/raise control lever
2. Fuel gauge
3. Engine coolant temperature gauge
4. Engine oil pressure warning light
5. Engine coolant temperature warning light
6. Glow plug indicator light
7. Charge indicator
8. Throttle control
9. Enable/disable switch

Fuel Gauge

The fuel gauge (Fig. 25) shows amount of fuel in tank.

Lower Mow/Raise Control Lever

The lever (Fig. 25) raises and lowers the cutting units and also starts and stops the reels.

Glow Plug Indicator Light

When lit (Fig. 25), indicates a control system problem. Light blinks when glow plugs are preheating.

Engine Oil Pressure Warning Light

This light (Fig. 25) indicates dangerously low engine oil pressure.

Charge Indicator

The charge indicator (Fig. 25) illuminates when system charging circuit malfunctions.

Enable/Disable Switch

The enable/disable switch (Fig. 25) is used in conjunction with lower mow / raise control lever (Joystick) to operate reels. Reels can be raised but not lowered when in mid position.

Backlap Switch

The backlap switch (Fig. 26) is used in conjunction with lower mow / raise control lever for backlapping operation. Refer to Cutting Unit Maintenance, Backlapping.



Figure 26

1. Backlap switch

Reel Speed Controls

The reel speed controls (Fig. 27) control the RPM of front and rear cutting units. #1 position is for backlapping. Remaining settings are for mowing operations. See section in manual for operating instructions.

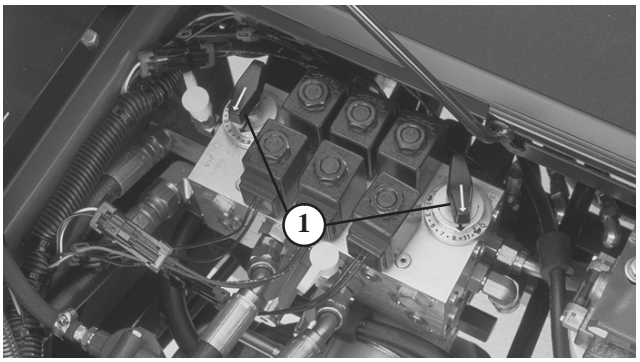

Figure 27

1. Reel speed controls

Hour Meter

The hour meter (Fig. 28) shows total hours that machine has been operated.

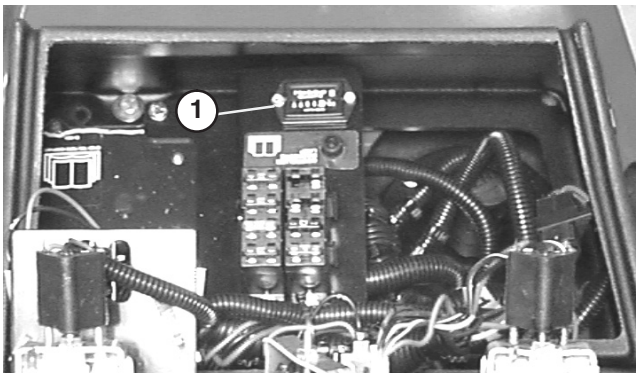

Figure 28

1. Hour meter

Starting and Stopping

Important The fuel system must be bled if any of the following situations have occurred:

A. Initial start up of a new machine.

B. Engine has ceased running due to lack of fuel.

C. Maintenance has been performed upon fuel system components; i.e., filter replaced, separator serviced, etc.

Refer to Bleeding the Fuel System, page 26.

1. Sit on the seat, keep foot off traction pedal. Ensure that the parking brake is engaged, traction pedal is in NEUTRAL, throttle is in FAST position and the ENABLE/DISABLE switch is in the DISABLE position.
2. Turn ignition switch to ON/Preheat position. An automatic timer will control preheat for 6 seconds. After preheat, turn key to START position. Crank the engine for no longer than **15 seconds**. Release key when engine starts. If additional preheat is required, turn key to OFF position then to ON/preheat position. Repeat process as required.
3. Run engine at idle speed or partial throttle until engine warms up.

Note: Move throttle to FAST position when restarting a warm engine.

4. To stop, move all controls to NEUTRAL and set parking brake. Return throttle to the idle position, turn key to OFF and remove it from switch.

Important Allow engine to idle for 5 minutes before shutting it off after a full load operation. Failure to do so may lead to turbo–charger trouble.

Bleeding the Fuel System

1. Park the machine on a level surface. Make sure fuel tank is at least half full.
2. Raise hood over engine.
3. Open the air bleed screw on the fuel injection pump (Fig. 29) with a 12 mm wrench.

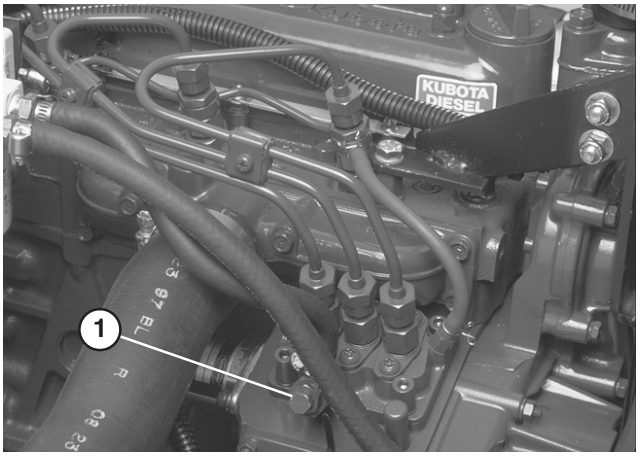

Figure 29

1. Fuel injection pump bleed screw

4. Turn key in ignition switch to the ON position. Electric fuel pump will begin operation, thereby forcing air out around air bleed screw. Leave key in ON position until solid stream of fuel flows out around screw. Tighten screw and turn key to OFF.

Danger

Under certain conditions, diesel fuel and fuel vapors are highly flammable and explosive. A fire or explosion from fuel can burn you and others and can cause property damage.

- **Use a funnel and fill the fuel tank outdoors, in an open area, when the engine is off and is cold. Wipe up any fuel that spills.**
- **Do not fill the fuel tank completely full. Add fuel to the fuel tank until the level is 1/4 to 1/2 in. (6 to 13 mm) below the bottom of the filler neck. This empty space in the tank allows the fuel to expand.**
- **Never smoke when handling fuel, and stay away from an open flame or where fuel fumes may be ignited by a spark.**
- **Store fuel in a clean, safety-approved container and keep the cap in place.**

Note: Normally, engine should start after above bleeding procedures are followed. However, if engine does not start, air may be trapped between injection pump and injectors; refer to Bleeding Air from the Injectors, page 39.

Setting the Reel Speed

To achieve a consistent, high quality-of-cut and a uniform after cut appearance, it is important that the reel speed controls (located under seat) be correctly set.

Adjust the reel speed controls as follows:

1. Select the height-of-cut at which the cutting units are set.
2. Choose the desired ground speed best suited for conditions.
3. Using the appropriate graph (Fig. 30) for 5 blade or 8 blade cutting units, determine the proper reel speed setting.

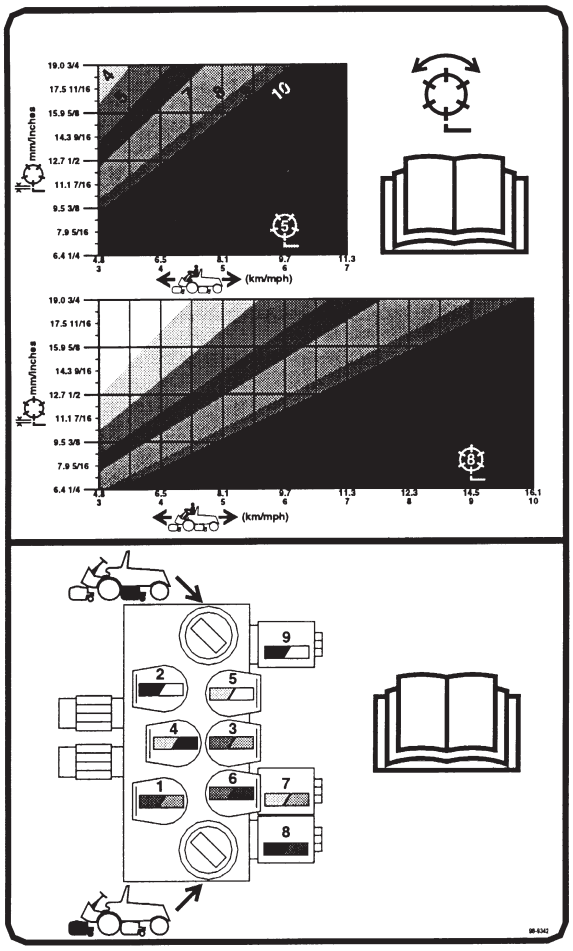

Figure 30

4. To set reel speed, rotate knobs (Fig. 31) until indicator arrows are in line with the number designating desired setting.

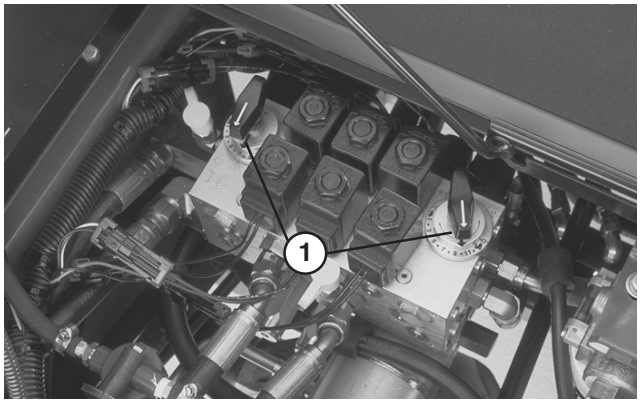

Figure 31

1. Reel speed control knobs

Note: Reel speed can be increased or decreased to compensate for turf conditions.

Adjusting the Lift Arm Down Pressure

The down pressure spring on each cutting unit lift arm can be adjusted to compensate for different turf conditions. Increased down pressure will help keep the cutting units on the ground when mowing at higher speeds and helps maintain a uniform height-of-cut in rough conditions or in areas of thatch build up.

Each down pressure spring may be adjusted to one of four settings. Each increment increases or decreases down pressure on cutting unit by 8 lb.

1. Position machine on a level surface, lower the cutting units, stop the engine, engage the parking brakes, and remove key from ignition switch.
2. Remove floor plate in front of seat and open the hood to gain access to all 5 springs.

Caution

Springs are under tension.

Use caution when adjusting.

3. Place an open end wrench on the hex shaft of the spring bracket (Fig. 32).
4. Remove the capscrew and locknut securing retaining bracket (Fig. 32), while rotating hex shaft to relieve spring tension.

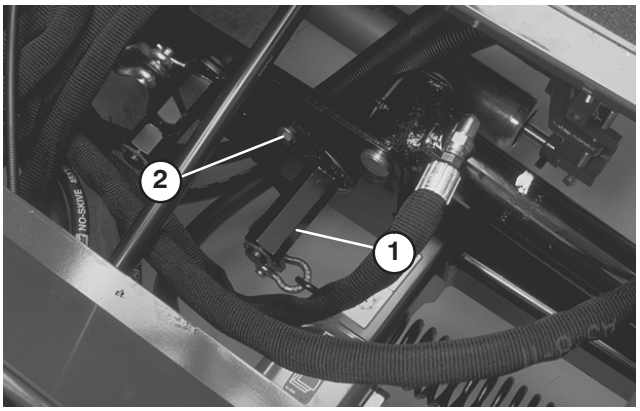

Figure 32

1. Spring bracket hex shaft
2. Retaining bracket

5. Move spring bracket to desired location and install capscrew and locknut, while rotating hex shaft to relieve spring tension.

Towing the Traction Unit

If it becomes necessary to tow the machine, tow it forward only, for a short distance and at a speed no greater than 3 mph.

Important If these towing limits are exceeded, severe damage to the hydrostatic transmission may occur.

To tow a disabled machine:

1. Loosen and remove capscrews securing the drive shaft to the engine drive coupler. Loosen capscrews clamping drive shaft to transmission (Fig. 33). Remove drive shaft.

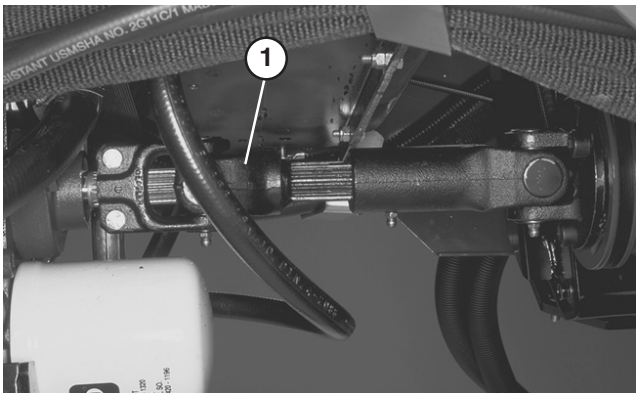

Figure 33

1. Drive shaft

Important If drive shaft is not removed before towing, the transmission input shaft will not be able to rotate, thus not allowing the transmission to maintain its internal lubrication. Severe damage to the hydrostatic transmission may occur.

2. Attach a suitable chain, strap or cable to the center of the front frame member (Fig. 34).

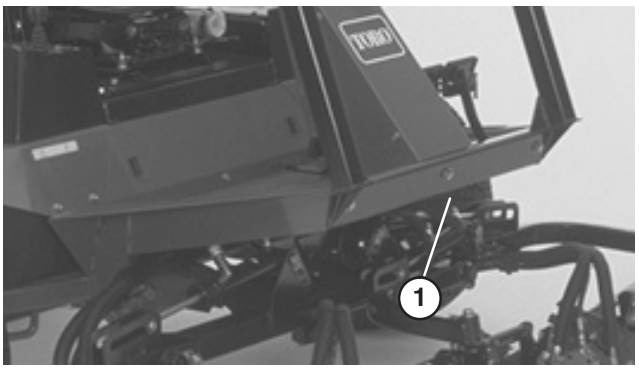

Figure 34

1. Center of front frame member

Note: Lock both brake pedals together before towing.

3. Attach the other end of the towing device to a vehicle that is capable of towing the machine safely and at speeds below 3 mph.
4. An operator must be on the machine to steer it and keep the traction pedal fully depressed in the forward position while towing.
5. When towing is completed, reinstall driveshaft as shown in Figure 33. The splines are designed to allow assembly only when the two halves of the shaft are properly oriented.

Diagnostic Light

The RM 5200-D/5400-D is equipped with a diagnostic light which indicates if the electronic controller is functioning correctly. The green diagnostic light is located under the control panel, next to the fuse block (Fig. 35). When the electronic controller is functioning correctly and the key switch is moved to the ON position, the controller diagnostic light will be illuminated. The light will blink if the controller detects a malfunction in the electrical system. The light will stop blinking and automatically reset when the key switch is turned to the OFF position.

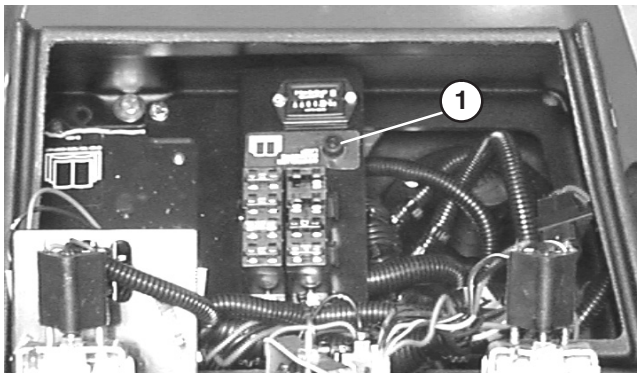

Figure 35

1. Electronic controller light

When the controller diagnostic light blinks, one of the following problems has been detected by the controller:

- One of the outputs has been shorted.
- One of the outputs is open circuited.

Using the diagnostic display, determine which output is malfunctioning; refer to Checking the Interlock Switches, page 29.

If the diagnostic light is not illuminated when the key switch is in the ON position, this indicates that the electronic controller is not operating. Possible causes are:

- Loopback is not connected.
- The light is burned out.
- Fuses are blown.
- Not functioning correctly.

Check electrical connections, input fuses and diagnostic light bulb to determine malfunction. Make sure loopback connector is secured to wire harness connector.

Diagnostic ACE Display

The RM 5200-D/5400-D is equipped with an electronic controller which controls most machine functions. The controller determines what function is required for various input switches (i.e. seat switch, key switch, etc.) and turns on the outputs to actuate solenoids or relays for the requested machine function.

For the electronic controller to control the machine as desired, each of the input switches, output solenoids and relays must be connected and functioning properly.

The Diagnostic ACE display is a tool to help the user verify correct electrical functions of the machine.

Checking the Interlock Switches

The purpose of the interlock switches are to prevent the engine from cranking or starting unless the traction pedal is in NEUTRAL, the Enable/Disable switch is in DISABLE and the Lower Mow / Raise control is in the neutral position. In addition, the engine will stop when the traction pedal is depressed with operator off the seat.

Caution

If safety interlock switches are disconnected or damaged the machine could operate unexpectedly causing personal injury.

- **Do not tamper with the interlock switches.**
- **Check the operation of the interlock switches daily and replace any damaged switches before operating the machine.**
- **Replace switches every two years regardless of whether they are operating properly or not.**

Verifying Interlock Switch Function

1. Park machine on a level surface, lower the cutting units, stop the engine and engage the parking brake.
2. Open control panel cover. Locate wire harness and connectors near controller (Fig. 36). Carefully unplug loop back connector from harness connector.

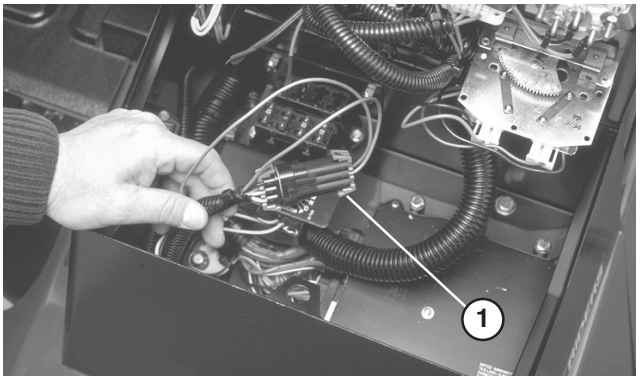

Figure 36

1. Wire harness and connectors

3. Connect the Diagnostic ACE display connector to the harness connector (Fig. 37). Make sure correct overlay decal is positioned on Diagnostic ACE display.

4. Turn the key switch to the ON position, but do not start machine.

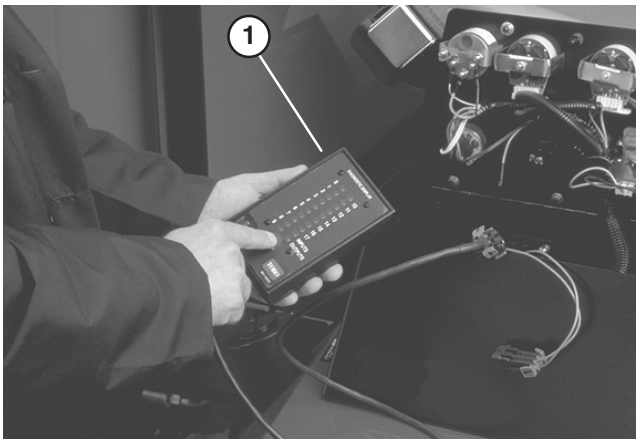

Figure 37

1. Diagnostic ACE

Note: The red text on the overlay decal refers to input switches and the green text refers to outputs.

5. The "inputs displayed" LED, on lower right column of the Diagnostic ACE, should be illuminated. If "outputs displayed" LED is illuminated, press the toggle button, on Diagnostic ACE, to change LED to "inputs displayed".

6. The Diagnostic ACE will illuminate the LED associated with each of the inputs when that input switch is closed.

   Individually, change each of the switches from open to closed (i.e., sit on seat, engage traction pedal, etc.), and note that the appropriate LED on Diagnostic ACE will blink on and off when corresponding switch is closed. Repeat on each switch that is it possible to be changed by hand.

7. If switch is closed and appropriate LED does not turn on, check all wiring and connections to switch and/or check switches with an ohm meter. Replace any defective switches and repair any defective wiring.

The Diagnostic ACE also has the ability to detect which output solenoids or relays are turned on. This is a quick way to determine if a machine malfunction is electrical or hydraulic.

Verifying Output Function

1. Park machine on a level surface, lower the cutting units, stop the engine and engage the parking brake.

2. Open control panel cover. Locate wire harness and connectors near controller. Carefully unplug loopback connector from harness connector.

3. Connect the Diagnostic ACE connector to the harness connector. Make sure correct overlay decal is positioned on Diagnostic ACE.

4. Turn the key switch to the ON position, but do not start machine.

Note: The red text on the overlay decal refers to input switches and the green text refers to outputs.

5. The "outputs displayed" LED, on lower right column of Diagnostic ACE, should be illuminated. If "inputs displayed" LED is illuminated, press the toggle button, on Diagnostic ACE, to change LED to "outputs displayed".

Note: It may be necessary to toggle between "inputs displayed" and "outputs displayed" several times to do the following step. To toggle back and forth, press toggle button once. This may be done as often as required. **Do not hold the button.**

6. Sit on the seat and attempt to operate the desired function of the machine. (If you need help verifying the correct input settings for each function, refer to the Logic Chart on page 32) The appropriate output LED's should illuminate to indicate that the ECU is turning on that function. (Refer to the list on page 31**,** or the logic chart to be certain of the specified output LED's.

Note: If any output LED is blinking, this indicates an electrical problem with that OUTPUT. Repair / replace defective electrical parts immediately. To reset a blinking LED, turn the key switch "OFF", then back "ON".

If no output LED's are blinking, but the correct output LED's do not illuminate, verify that the required input switches are in the necessary positions to allow that function to occur. Verify correct switch function.

If the output LED's are on as specified, but the machine does not function properly, this indicates a non–electrical problem. Repair as necessary.

Note: Due to electrical system constraints, the output LED's for "START", "PREHEAT" and "ETR/ALT" may not blink even though an electrical problem may exist for those functions. If the machine problem appears to be with one of these functions, be certain to check the electrical circuit with a volt/ohm meter to verify that no electrical problem exists to these functions.

If each output switch is in the correct position and functioning correctly, but the output LED's are not correctly illuminated, this indicates an ECU problem. If this occurs, contact your Toro Distributor for assistance.

Important The Diagnostic ACE display must not be left connected to the machine. It is not designed to withstand the environment of the machine's every day use. When done using Diagnostic ACE, disconnect it from the machine and reconnect loopback connector to harness connector. Machine will not operate without loopback connector installed on harness. Store Diagnostic ACE in dry, secure location in shop, not on machine.

Hydraulic Valve Solenoid Functions

Use the list below to identify and describe the different functions of the solenoids in the hydraulic manifold. Each solenoid must be energized to allow function to occur.

Solenoid	Function
S1	Front reel circuit
S2	Rear reel circuit
S3	Lift/lower front wing cutting units
S4	Lift/lower center cutting unit
S5	Lift/lower rear cutting unit
S6	Lower any cutting units
S7	Lift any cutting units
S8, S9	Backlap any cutting units

Operating Characteristics

Familiarization

Before mowing grass, practice operating machine in an open area. Start and stop the engine. Operate in forward and reverse. Lower and raise cutting units and engage and disengage reels. When you feel familiar with the machine, practice operating up and down slopes at different speeds.

The brakes can be used to assist in turning the machine. However, use them carefully, especially on soft or wet grass conditions because the turf may be torn accidentally. Individual turning brakes may also be used to help maintain traction. For example, in some slope conditions, the uphill wheel slips and loses traction. If this situation occurs, depress uphill turn pedal gradually and intermittently until the uphill wheel stops slipping, thus, increasing traction on the downhill wheel.

Warning

When operating the machine, always use the seat belt and ROPS together.

Warning System

If a warning light comes on during operation, stop the machine immediately and correct the problem before continuing operation. Serious damage could occur if the machine is operated with a malfunction.

Mowing

Start engine and move throttle to FAST so engine is running at maximum speed. Move the ENABLE/DISABLE switch to ENABLE and use the LOWER MOW/RAISE lever to control the cutting units (front cutting units are timed to lower before the rear cutting units). To move forward and cut grass, press traction pedal forward.

Transport

Move the ENABLE/DISABLE switch to joy stick DISABLE and raise the cutting units to the transport position. Be careful when driving between objects so you do not accidentally damage the machine or cutting units. Use extra care when operating machine on slopes. Drive slowly and avoid sharp turns on slopes to prevent roll overs. The cutting units should be lowered when going downhill for steering control.

Important Allow engine to idle for 5 minutes before shutting it off after a full load operation. Failure to do so may lead to turbo–charger trouble.

LOGIC GRID

RM 5200–D
RM 5400–D

KEY: X=CLOSED, O=OPEN, P=OUTPUT ON,
M=MOMENTARILY CLOSED,
A=OUTPUT ON IF REELS WERE PREVIOUSLY RUNNING

TIMERS
T1= .5 sec
T2= 5.0 sec
T3= .9 sec
T4= .1 sec
T5= .9 sec
T6= 6 sec

ACTIONS	INPUTS 0	1	2 Key Run	3 Traction Neutral	4 Seat Switch	5 High Coolant Temp	6	7 Raise	8 Enable Reels	9 Front Units Down	10 Backlap Front	11 Backlap Rear	12 Lower / Mow	13	14	15	16	17	AØ Start Key	A1	T Timer Involved	OUTPUTS 0 Diagnostic Light	1 S8,S9	2 S2	3 S3	4 S4	5 S5	6 S6	7 ETR Hold / Alt	10 S1	11 S7	12 Start	13 Preheat
0) Controller OK			X																			P										
1) Preheat			X																		T6	P										P
2) Start				X				O	O				O						X			P									P	P
3) Run (No operator)			X	X		O																P							P			
Run (with operator)			X	O	X	O																P							P			
4) Lower (To turn around)			X					O	O	O	O	O	X									P			P			P				
Lower (All units when disabled)			X					O	O	X	O	O	X									P			P	P	P	P				
Lower (All units when enabled)			X		X			O	X	O	O	O	X									P			P	P		P				
Lower / Mow–Front			X		X			O	X	X	O	O	M								T1	P			P	P		P	P			
Lower / Mow–Front & Rear			X		X			O	X	X	O	O	X								T2	P		P	P	P	P	P	P			
5) Mow			X		X			O	X	X	O	O	M									P		P					P			
6) Raise (transport)			X					X	O		O	O	O									P			P	P	P			P		
Raise (To turn around front)			X		X			M	X	X	O	O	O								T3	P		A	P	P				P		
Raise (To turn around front & rear)			X		X			X	X	X	O	O	O									P			P	P	P			P		
Raise (To turn around front & rear)			X		X			X	X	O	O	O	O								T5	P				P	P			P		
7) Backlap Front			X	X				O	X	X	X	O	M								T2	P	P		P	P	P	P	P			
			X	X				O	X	X	X	O										P	P						P			
8) Backlap Rear			X	X				O	X	X	O	X	M								T2	P	P	P	P	P	P	P				
			X	X				O	X	X	O	X										P	P	P								

Maintenance

Note: Determine the left and right sides of the machine from the normal operating position.

Important Refer to your engine operator's manual for additional maintenance procedures.

Recommended Maintenance Schedule

Maintenance Service Interval	Maintenance Procedure
After first 10 hours	• Check the fan and alternator belt tension. • Torque the wheel lug nuts. • Change the transmission fluid. • Replace the transmission filter.
After first 50 hours	• Replace the engine oil and filter. • Check the engine RPM (idle and full throttle).
Every 50 hours	• Check the battery fluid level. • Check the battery cable connections. • Lubricate all grease fittings. • Inspect the air filter, dust cup, and baffle.
Every 100 hours	• Check the fan and alternator belt tension. • Inspect the cooling system hoses.
Every 150 hours	• Replace the engine oil and filter.
Every 200 hours	• Torque the wheel lug nuts. • Drain moisture from the hydraulic tank. • Drain moisture from the fuel tank. • Check the reel bearing preload. • Lubricate the front axle bearings.
Every 400 hours	• Service the air cleaner (when the indicator shows red). • Replace the fuel/water separator filter. • Replace the fuel filter. • Inspect the traction linkage movement. • Check the engine RPM (idle and full throttle).
Every 800 hours	• Change the hydraulic filter. • Change the transmission fluid. • Replace the transmission filter. • Check rear wheel toe-in. • Pack the bearings to both rear wheels (2WD). • Change the rear axle lubricant (4WD). • Adjust the valves (Kubota diesel engine).
Every 1600 hours or 2 years, whichever occurs first	• Replace all moving hoses. • Replace the interlock safety switches. • Flush/replace the cooling system fluid. • Drain/flush the fuel tank. • Drain/flush the hydraulic tank.

Daily Maintenance Checklist

Duplicate this page for routine use.

Maintenance Check Item	For the week of: Mon.	Tues.	Wed.	Thurs.	Fri.	Sat.	Sun.
Check safety interlock operation.							
Check brake operation.							
Check engine oil and fuel level.							
Drain the water/fuel separator.							
Check the air filter restriction indicator.							
Check the radiator and screen for debris.							
Check unusual engine noises.[1]							
Check unusual operating noises.							
Check the transmission oil level.							
Check the hydraulic system oil level.							
Check the hydraulic filter indicator.[2]							
Check hydraulic hoses for damage.							
Check for fluid leaks.							
Check the tire pressure.							
Check instrument operations.							
Check the reel-to-bedknife adjustment.							
Check the height-of-cut adjustment.							
Check the cutting units shear pin.							
Lubricate all grease fittings.[3]							
Touch up damaged paint.							

[1]Check the glow plugs and injector nozzles if excess smoke or rough running is noted.

[2]Check with the engine running and the oil at operating temperature.

[3]Grease immediately after **every** washing, regardless of the interval listed.

Notation for Areas of Concern

Inspection performed by:		
Item	**Date**	**Information**
1		
2		
3		
4		
5		
6		
7		
8		

Service Interval Chart

REELMASTER 5200-D
5400-D / 5500-D
QUICK REFERENCE AID

CHECK/SERVICE (daily)

1. OIL LEVEL, ENGINE
2. OIL LEVEL, TRANSMISSION
3. OIL LEVEL, HYDRAULIC TANK
4. COOLANT LEVEL, RADIATOR
5. FUEL /WATER SEPARATOR
6. PRECLEANER -- AIR CLEANER
7. RADIATOR SCREEN
8. BRAKE FUNCTION
9. TIRE PRESSURE
10. BATTERY
11. BELTS (FAN, ALT.)

GREASING -- SEE OPERATOR'S MANUAL

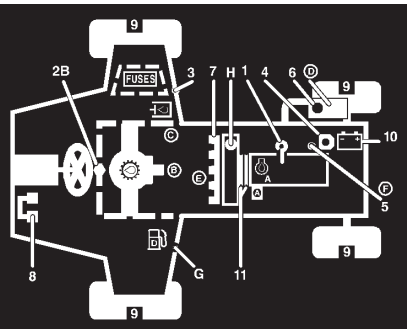

FLUID SPECIFICATIONS/CHANGE INTERVALS

SEE OPERATOR'S MANUAL FOR INITIAL CHANGES.	FLUID TYPE	CAPACITY	CHANGE INTERVAL		FILTER PART NO.
			FLUID	FILTER	
A. ENGINE OIL	SAE 10W-30CD	4.0 QTS.*	50 HRS.	100 HRS.	104-5167
B. TRANSMISSION OIL	MOBIL 424	5 QTS.*	800 HRS.	800 HRS.	75-1330
C. HYD. CIRCUIT OIL	MOBIL 424	8.5 GALS.*	800 HRS.	SEE INDICATOR	75-1310 (RM52/5400) 94-2621 (RM5500)
D. AIR CLEANER				400 HRS.	98-9763
E. FILTER, IN-LINE FUEL				400 HRS.	98-7612
F. WATER SEPARATOR				400 HRS.	98-9764
G. FUEL TANK	NO. 2-Diesel	10 GALS.	Drain and flush, 2 yrs.		
H. COOLANT	50/50 Ethylene glycol/water	9.6 QTS.	Drain and flush, 2 yrs.		

* INCLUDING FILTER

107-8841

Caution

If you leave the key in the ignition switch, someone could accidently start the engine and seriously injure you or other bystanders.

Remove the key from the ignition switch and lower the cutting units to the ground before servicing or making adjustments to the machine.

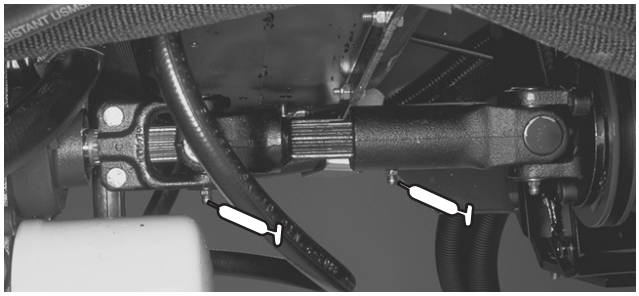

Figure 38

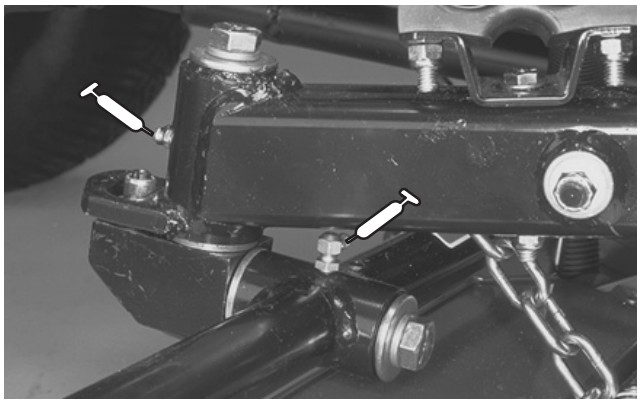

Figure 39

Greasing the Bearing and Bushings

The machine has grease fittings that must be lubricated regularly with No. 2 General Purpose Lithium Base Grease. If machine is operated under normal conditions, lubricate all bearings and bushings after every 50 hours of operation. Lubricate bearings and bushings immediately **after every** washing, regardless of the interval listed.

The grease fitting locations and quantities are: Engine Drive shaft (3), (Fig. 38); Cutting unit carrier frame and pivot (2 ea.), (Fig. 39); Lift arm pivots (5), Drive shaft clutch (1) (Fig. 40); Rear axle tie rod (2), Steering cylinder ball joints (2), Axle steering pivots (2) Rear axle pivot (1) (Fig. 41); Traction control linkage at transmission (1), Drive shaft support bearing (1), Rear axle drive shaft (3) (Fig. 42); Brake pedal (1) (Fig. 43); Lift cylinders (5) (Fig. 44) and Fan shaft (Fig. 45).

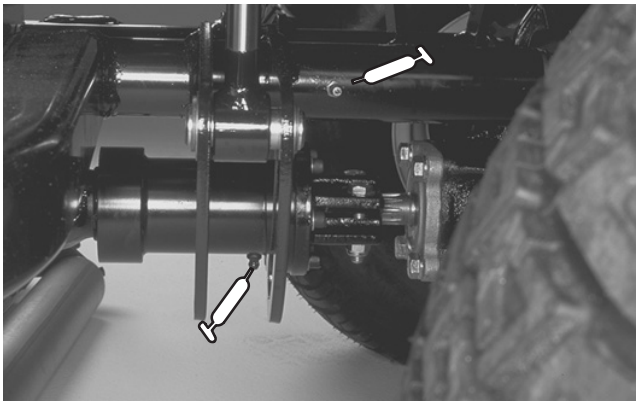

Figure 40

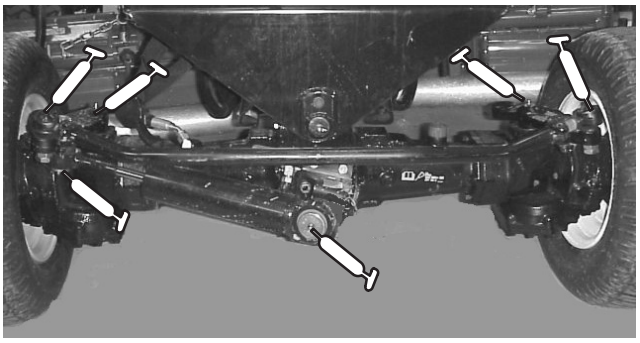

Figure 41

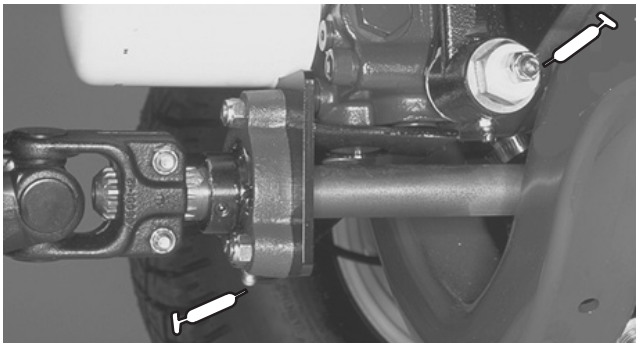

Figure 42



Figure 43

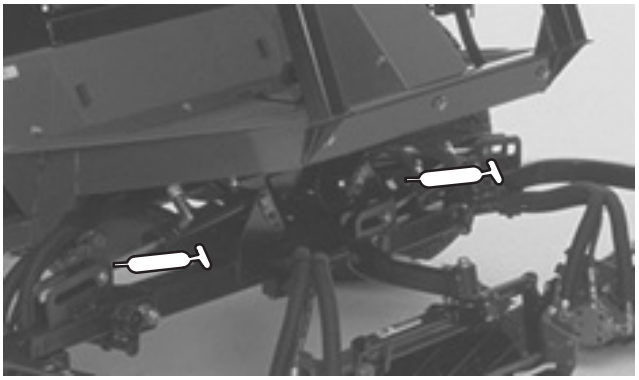

Figure 44

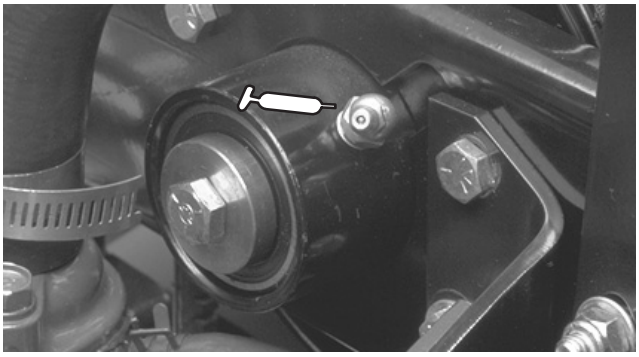

Figure 45

General Air Cleaner Maintenance

- Check the air cleaner body for damage which could cause an air leak. Replace if damaged. Check the whole intake system for leaks, damage or loose hose clamps.
- Service the air cleaner filter only when the service indicator requires it. Changing the air filter before it is necessary only increases the chance of dirt entering the engine when the filter is removed
- Be sure the cover is seated correctly and seals with the air cleaner body.

Servicing the Precleaner Bowl

Normally, inspect precleaner bowl daily. When conditions are extremely dusty and dirty, inspect more frequently. Do not let dust or debris build up above level marks on precleaner bowl.

1. Remove thumb screw and separate cover from precleaner bowl (Fig. 46).

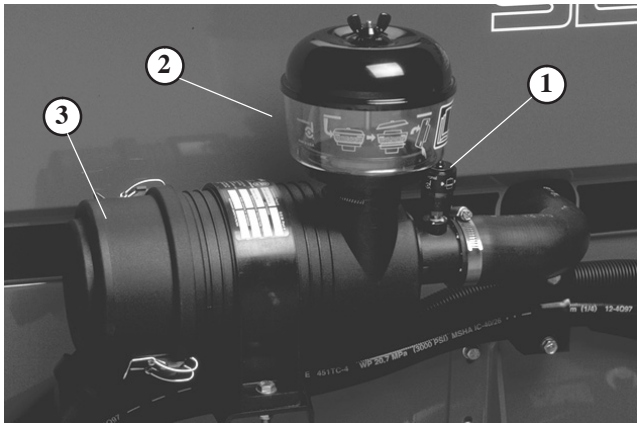

Figure 46

1. Air cleaner indicator
2. Precleaner bowl
3. Dust cup

2. Empty precleaner bowl and wipe clean.
3. Assemble and install precleaner bowl, cover, and thumb screw.

Note: When operating machine in extremely dusty conditions, an optional extension tube (Toro Part No. 43-3810), which raises precleaner bowl above hood, thus, lengthening the time between precleaner bowl servicing, is available from your local authorized Toro Distributor.

Servicing the Air Cleaner

1. Release the latches and remove the cover from the air cleaner body (Fig. 46). Before removing the filter, use low pressure air (40 psi, clean and dry) to help remove large accumulations of debris packed between outside of primary filter and the canister. Avoid using high pressure air which could force dirt through the filter into the intake tract. This cleaning process prevents debris from migrating into the intake when the primary filter is removed.

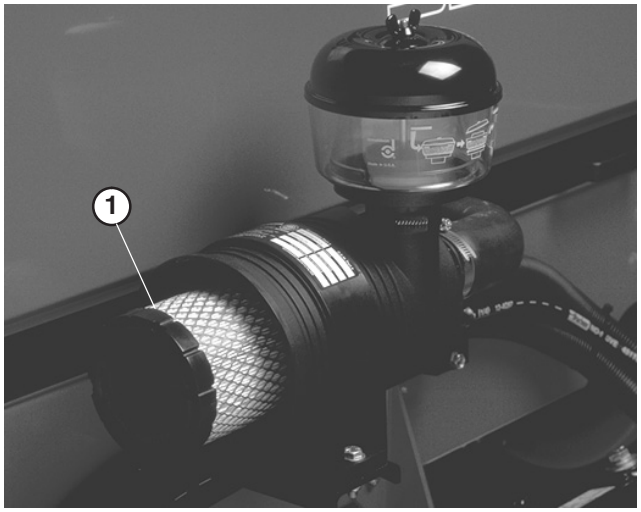

Figure 47

1. Filter element

2. Remove and replace the primary filter (Fig. 47). Cleaning of the used element is not recommended due to the possibility of damage to the filter media. Inspect the new filter for shipping damage, checking the sealing end of the filter and the body. Do not use a damaged element. Insert the new filter by applying pressure to the outer rim of the element to seat it in the canister. Do not apply pressure to the flexible center of the filter.
3. Clean the dirt ejection port located in the removable cover. Remove the rubber outlet valve from the cover, clean the cavity and replace the outlet valve.
4. Install the cover orienting the rubber outlet valve in a downward position – between approximately 5:00 to 7:00 when viewed from the end.
5. Secure the cover latches.
6. Reset indicator (Fig. 46) if showing red.

Engine Oil and Filter

Change oil and filter initially after the first 50 hours of operation, thereafter change oil and filter every 150 hours.

1. Remove drain plug (Fig. 48) and let oil flow into drain pan. When oil stops, install drain plug.

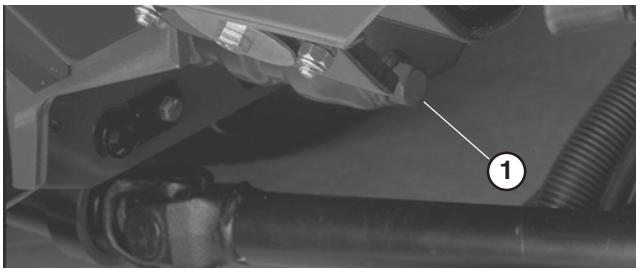

Figure 48

1. Engine oil drain plug

2. Remove oil filter (Fig. 49). Apply a light coat of clean oil to the new filter seal before screwing it on. **Do not over-tighten.**

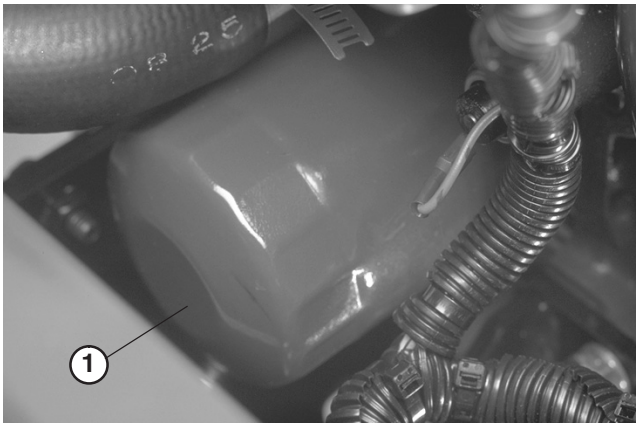

Figure 49

1. Engine oil filter

3. Add oil to crankcase; refer to Checking the Engine Oil, page 20.

Servicing the Fuel System

Fuel Tank

Drain and clean fuel tank every 2 years. Also, drain and clean tank if fuel system becomes contaminated or if machine is to be stored for an extended period. Use clean fuel to flush out the tank.

Fuel Lines and Connections

Check lines and connections every 400 hours or yearly, whichever comes first. Inspect for deterioration, damage, or loose connections.

Fuel Filter/Water Separator

Drain water or other contaminants from fuel filter / water separator (Fig. 50) daily.

1. Locate fuel filter, under hydraulic tank, and place a clean container under it.
2. Loosen drain plug on bottom of filter canister. Tighten plug after draining.

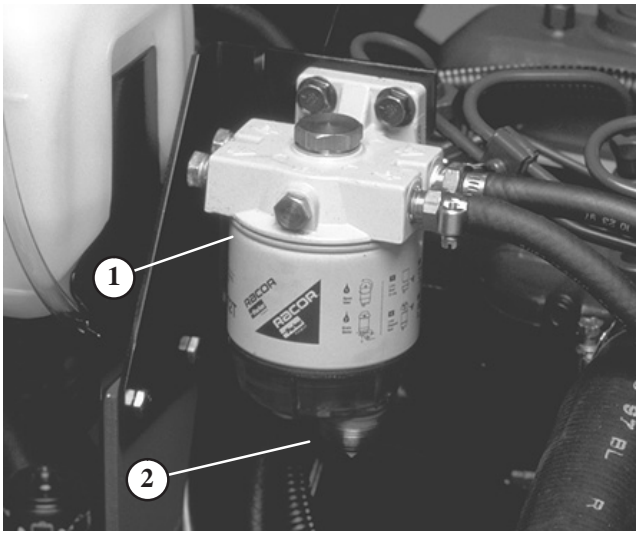

Figure 50

1. Fuel filter/water separator 2. Drain plug

Replace filter canister after every 400 hours of operation.

1. Clean area where filter canister mounts.
2. Remove filter canister and clean mounting surface.
3. Lubricate gasket on filter canister with clean oil.
4. Install filter canister by hand until gasket contacts mounting surface, then rotate an additional 1/2 turn.

Replacing the Fuel Pre Filter

Replace the fuel pre filter after every 400 operating hours or yearly, whichever occurs first.

1. Remove screw securing filter to frame rail.
2. Clamp both fuel lines that connect to the fuel filter so fuel cannot drain when lines are removed.

3. Loosen the hose clamps at both ends of the filter and pull fuel lines off filter.

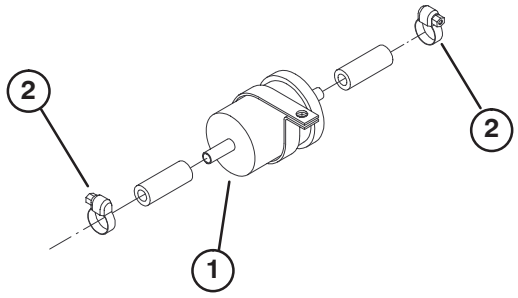

Figure 51

1. Fuel filter
2. Hose clamps

4. Slide hose clamps onto ends of fuel lines. Push fuel lines onto fuel filter and secure them with hose clamps. Be sure arrow on side of filter points toward the injection pump.

Danger

Under certain conditions, diesel fuel and fuel vapors are highly flammable and explosive. A fire or explosion from fuel can burn you and others and can cause property damage.

- **Use a funnel and fill the fuel tank outdoors, in an open area, when the engine is off and is cold. Wipe up any fuel that spills.**
- **Do not fill the fuel tank completely full. Add fuel to the fuel tank until the level is 1/4 to 1/2 in. (6 to 13 mm) below the bottom of the filler neck. This empty space in the tank allows the fuel to expand.**
- **Never smoke when handling fuel, and stay away from an open flame or where fuel fumes may be ignited by a spark.**
- **Store fuel in a clean, safety-approved container and keep the cap in place.**

Bleeding Air from the Injectors

Note: This procedure should be used only if fuel system has been purged of air through normal priming procedures and engine will not start; refer to Bleeding the Fuel System, page 26.

1. Loosen the pipe connection to the No. 1 nozzle and holder assembly (Fig. 52).
2. Move throttle to FAST position.
3. Turn key in key switch to START position and watch fuel flow around connector. Turn key to OFF position when solid flow is observed.
4. Tighten pipe connector securely.
5. Repeat steps on remaining nozzles.

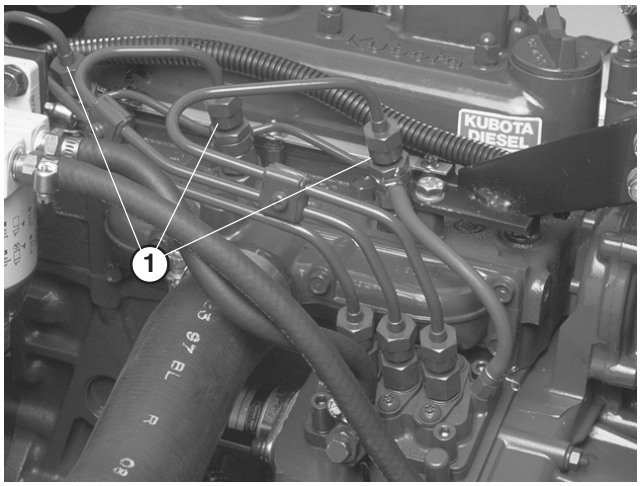

Figure 52

1. Fuel injectors (3)

Servicing the Engine Cooling System

Removing Debris

Remove debris from screen, oil coolers and radiator daily, clean more frequently in dirty conditions.

1. Turn engine off and raise hood. Clean engine area thoroughly of all debris.
2. Loosen clamps and pull up on screen to slide it out of mounting tracks (Fig. 53). Clean screen thoroughly with compressed air.

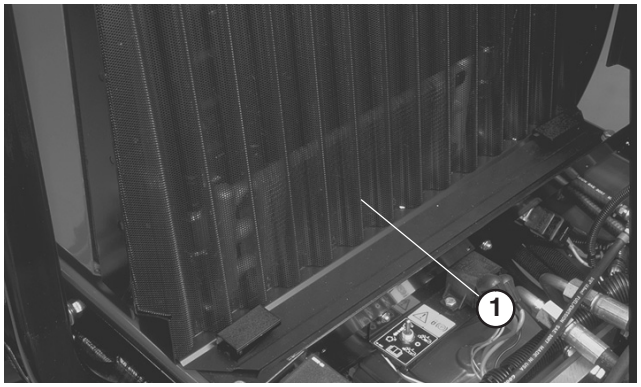

Figure 53

1. Screen

3. Slightly raise oil coolers and pivot forward (Fig. 54). Clean both sides of oil coolers and radiator area thoroughly with compressed air. Pivot oil coolers back into position.

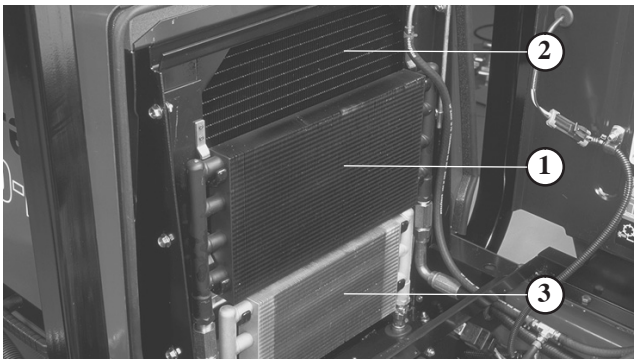

Figure 54

1. Reel oil cooler
2. Radiator
3. Transmission oil cooler

4. Install screen and close hood.

Servicing the Engine Belts

Check condition and tension of all belts after first day of operation and every 100 operating hours thereafter.

Alternator Belt

To Check Tension:

1. Open hood.
2. Check tension by depressing belt (Fig. 55) midway between alternator and crankshaft pulleys with 22 lb. of force. Belt should deflect 7/16 in. If deflection is incorrect, proceed to step 3. If correct, continue operation.

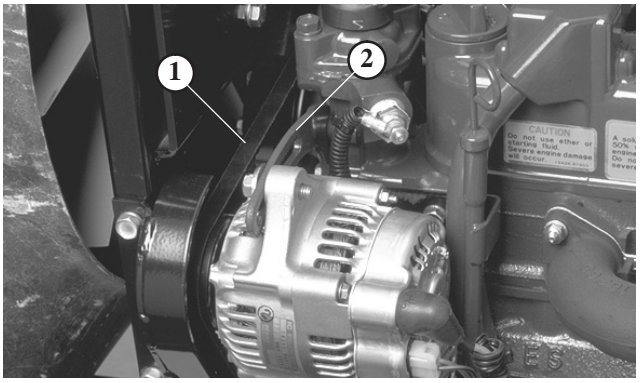

Figure 55

1. Alternator belt
2. Brace

3. Loosen bolt securing brace to engine (Fig. 55) and bolt securing alternator to brace.
4. Insert pry bar between alternator and engine and pry out on alternator.
5. When proper tension is achieved, tighten alternator and brace bolts to secure adjustment.

Cooling Fan Belt

1. Loosen locknut on belt tensioner lever (Fig. 56).
2. Apply 5–10 lb. of force at end of lever to set the proper tension on the fan belt.
3. Tighten locknut to secure adjustment.

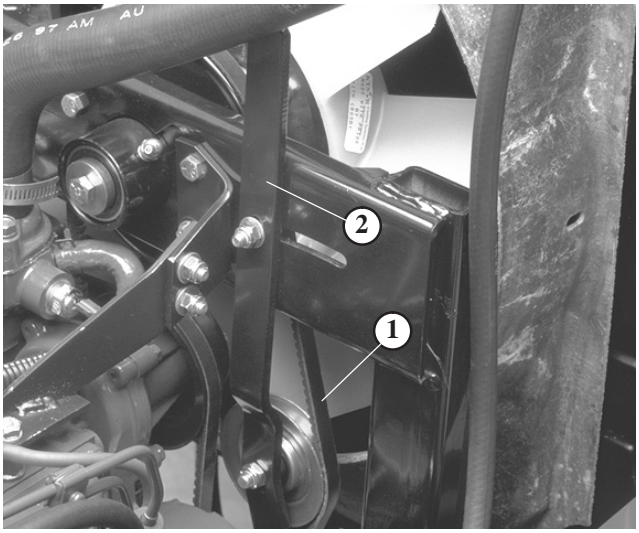

Figure 56

1. Cooling fan belt
2. Tensioner lever

Adjusting the Throttle

1. Position throttle lever forward so it stops against seat base slot.
2. Loosen the throttle cable connector on the lever arm at the injection pump.
3. Hold the injection pump lever arm (Fig. 57) against the high idle stop and tighten the cable connector.

Note: When tightened, the cable connector must be free to swivel.

4. Torque the locknut, used to set the friction device on the throttle lever, to 40–55 in.-lb. The maximum force required to operate the throttle lever should be 20 lb.

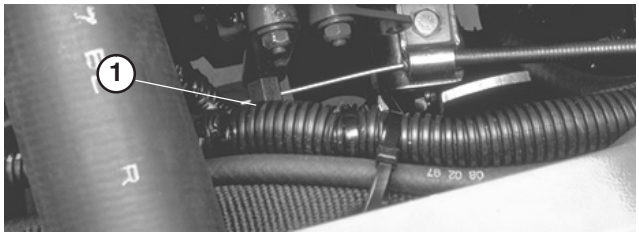

Figure 57

1. Injection pump lever arm

Changing the Hydraulic Fluid

Change hydraulic fluid after every 800 operating hours, in normal conditions. If fluid becomes contaminated, contact your local Toro distributor because the system must be flushed. Contaminated fluid looks milky or black when compared to clean oil.

1. Turn engine off and raise hood.
2. Remove drain plug from bottom of reservoir (Fig. 58) and let hydraulic fluid flow into drain pan. Reinstall and tighten plug when hydraulic fluid stops draining.

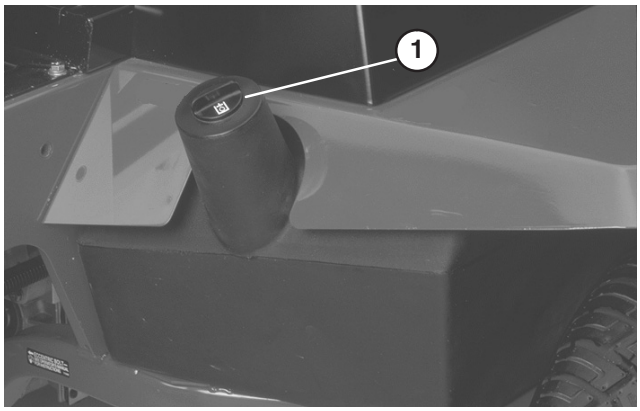

Figure 58

1. Hydraulic reservoir

3. Fill reservoir with approximately 8.5 gallons of hydraulic fluid; refer to Checking the Hydraulic Fluid, page 22.

Important Use only hydraulic fluids specified. Other fluids could cause system damage.

4. Install reservoir cap. Start engine and use all hydraulic controls to distribute hydraulic fluid throughout the system. Also check for leaks. Then stop the engine.
5. Check level of fluid and add enough to raise level to FULL mark on dipstick. **Do not over-fill.**

Replacing the Hydraulic Filter

The hydraulic system filter head is equipped with a service interval indicator. With the engine running, view the indicator, it should be in the GREEN zone. When the indicator is in the RED zone, the filter element should be changed.

Use the Toro replacement filter (Part No. 75-1310).

Important Use of any other filter may void the warranty on some components.

1. Position machine on a level surface, lower the cutting units, stop the engine, engage the parking brakes, and remove key from ignition switch.
2. Clean area around filter mounting area (Fig. 59). Place drain pan under filter and remove filter.

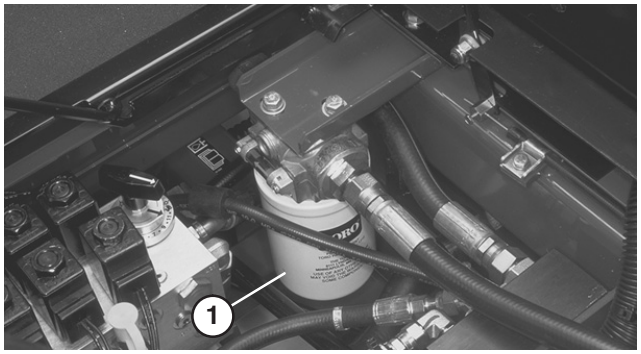

Figure 59

1. Hydraulic filter

3. Lubricate new filter gasket and fill the filter with hydraulic fluid.
4. Ensure that the filter mounting area is clean. Screw filter on until gasket contacts mounting plate. Then tighten filter one half turn.
5. Start engine and let run for about two minutes to purge air from the system. Stop the engine and check for leaks.

Checking the Hydraulic Lines and Hoses

Daily, check hydraulic lines and hoses for leaks, kinked lines, loose mounting supports, wear, loose fittings, weather deterioration and chemical deterioration. Make all necessary repairs before operating.

Warning

Hydraulic fluid escaping under pressure can penetrate skin and cause injury.

- **Make sure all hydraulic fluid hoses and lines are in good condition and all hydraulic connections and fittings are tight before applying pressure to the hydraulic system.**
- **Keep your body and hands away from pin hole leaks or nozzles that eject high pressure hydraulic fluid.**
- **Use cardboard or paper to find hydraulic leaks.**
- **Safely relieve all pressure in the hydraulic system before performing any work on the hydraulic system.**
- **Get immediate medical help if fluid is injected into skin.**

Hydraulic System Test Ports

The test ports are used to test pressure in the hydraulic circuits. Contact your local Toro distributor for assistance.

Test Port #1 (Fig. 60) is used to assist in trouble shooting the hydraulic circuit for the front cutting units and lift cylinders.

Test Port #2 (Fig. 60) is used to assist in trouble shooting the hydraulic circuit for the rear cutting units.

Test Port #3 (not shown) is located on the rear of the hydrostatic transmission and is used to measure the charge pressure of the transmission.

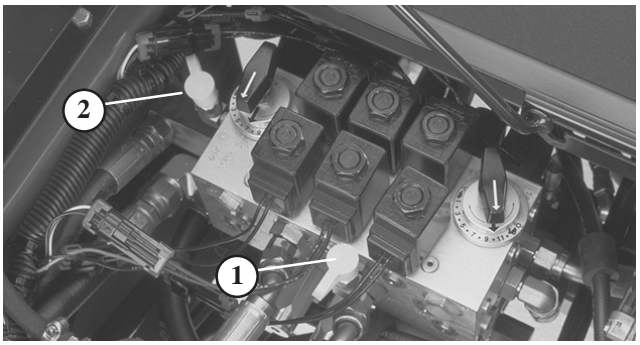

Figure 60

1. Test port #1
2. Test port #2

Adjusting the Traction Drive for Neutral

The machine must not creep when traction pedal is released. If it does creep, an adjustment is required.

1. Park machine on a level surface, shut engine off, and lower cutting units to the floor. Depress only the right brake pedal and engage the parking brake.
2. Jack up left side of machine until front tire is off the shop floor. Support machine with jack stands to prevent it from falling accidentally.

Note: On 4 wheel drive models, left rear tire must also be off the shop floor or 4 wheel drive driveshaft must be removed.

3. Under right side of machine, loosen locknut on traction adjustment cam (Fig. 61).

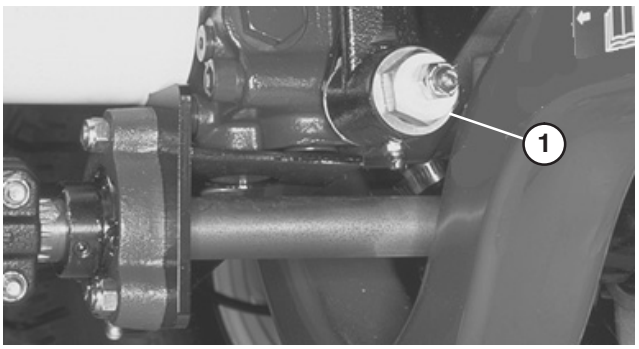

Figure 61

1. Traction adjustment cam

Warning

The engine must be running so the final adjustment of the traction adjustment cam can be performed. This could cause personal injury.

Keep hands, feet, face, and other body parts away from the muffler, other hot parts of the engine, and any rotating parts.

4. Start engine and rotate cam hex in either direction until wheel ceases rotation.
5. Tighten locknut securing adjustment.
6. Stop the engine and release the right brake. Remove jack stands and lower the machine to the shop floor. Test drive the machine to make sure it does not creep.

Adjusting the Cutting Unit Lift Rate

The cutting unit lift circuit is equipped with (3) adjustable valves used to ensure the cutting units do not raise too quickly and bang against lift stops. Adjust cutting units as follows:

Center Cutting Unit

1. Locate valve behind access panel above operator's platform (Fig. 62).
2. Loosen setscrew on valve and rotate valve approximately 1/2 turn clockwise.
3. Verify lift rate adjustment by raising and lowering cutting unit several times. Readjust as required.
4. After desired lift rate is attained, tighten setscrew to lock adjustment.

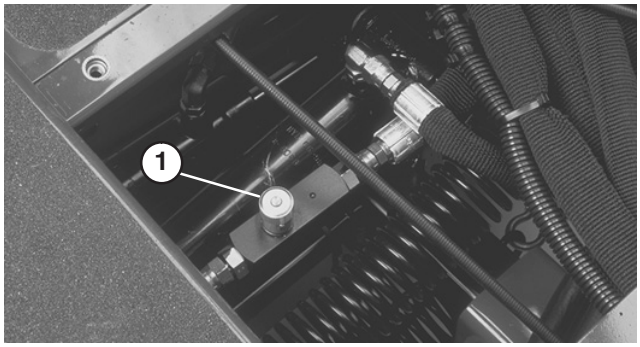

Figure 62

1. Center cutting unit adjustment valve

Outside Front Cutting Units

1. Locate valve on flow divider (under foot rest) (Fig. 63).
2. Loosen setscrew on valve. Rotate valve 1/2 turn clockwise.
3. Verify lift rate adjustment by raising and lowering cutting units several times. Readjust as required.
4. After desired lift rate is attained, tighten set screw to lock adjustment.

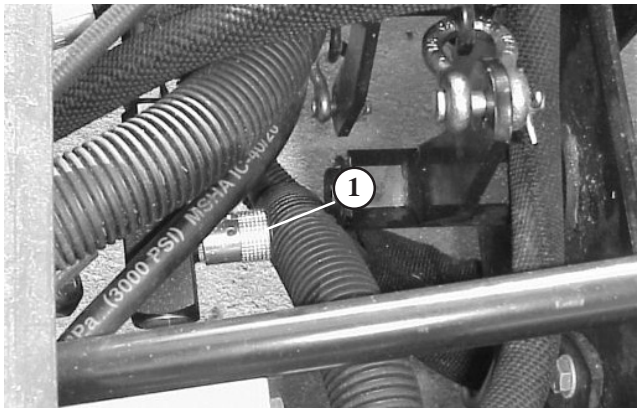

Figure 63

1. Outside front cutting units adjustment valve

Rear Cutting Units

1. Raise hood and locate valve on left rear side of machine (Fig. 64).

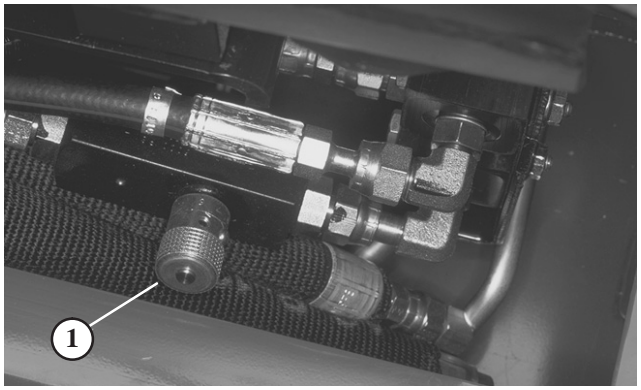

Figure 64

1. Rear cutting units adjustment valve

2. Loosen setscrew on valve and rotate valve approximately 1/2 turn clockwise.
3. Verify lift rate adjustment by raising and lowering cutting units several times. Readjust as required.
4. After desired lift rate is attained, tighten setscrew to lock adjustment.

Checking and Adjusting the Traction Linkage

Due to normal wear in the control linkage and hydrostatic transmission, an increased amount of force may be required to return the transmissions to neutral. Periodically check the machine.

1. Park machine on a level surface, lower cutting units to the floor and shut engine off.
2. Connect brake pedals together with locking pin, push both pedals down and pull parking brake latch out.
3. Loosen outer hex nut securing eye bolt to spring anchor plate (Fig. 65).

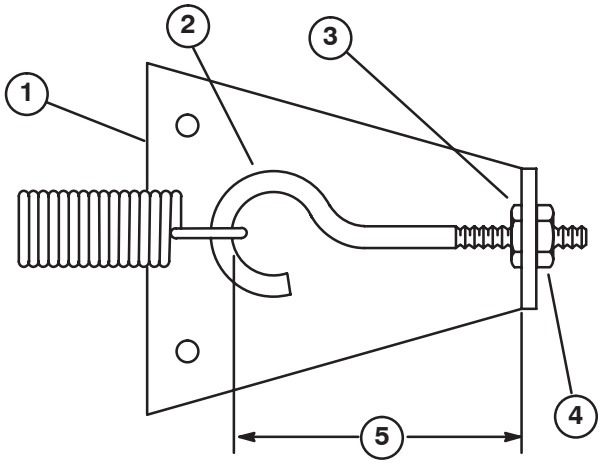

Figure 65

1. Spring anchor plate
2. Eye bolt
3. Inner locknut
4. Outer locknut
5. Shorten distance to decrease time required to stop machine.

4. Rotate clockwise until distance between inside of eye bolt loop and inside of spring anchor plate is shortened 1/8 in., as shown in Figure 65. Tighten hex nut.
5. Operate the machine and check stopping distance. Repeat procedure if required.

Note: Shortening the distance between inside of eye bolt loop and inside of spring anchor plate increases the pedal force on the traction pedal. Therefore, do not over adjust.

Adjusting the Service Brakes

Adjust the service brakes when there is more than 1 inch of "free travel" of the brake pedal, or when the brakes do not work effectively. Free travel is the distance the brake pedal moves before braking resistance is felt.

1. Disengage locking pin from brake pedals so both pedals work independently of each other.
2. To reduce free travel of brake pedals, tighten the brakes by loosening the front nut on threaded end of brake cable (Fig. 66). Then tighten rear nut to move cable backward until brake pedals have 1/2 to 1 inch of free travel. Tighten front nuts after brakes are adjusted correctly.



Figure 66

1. Brake cables

Changing the Transmission Fluid

Change the transmission fluid after every 800 hours of operation, in normal conditions.

1. Position machine on a level surface, lower the cutting units, stop the engine, engage the parking brakes, and remove key from ignition switch.
2. Clean area around suction line on bottom of transmission (Fig. 67). Place drain pan under line.
3. Remove line from transmission allowing fluid to drain into drain pan.
4. Install suction line to transmission.
5. Fill with oil; refer to Checking the Transmission Fluid, page 21.

6. Before starting the engine after changing transmission fluid, disconnect the run (ETR) solenoid on the engine, and crank the engine several times for 15 seconds. This allows the charge pump to fill the transmission with fluid before the engine is started.

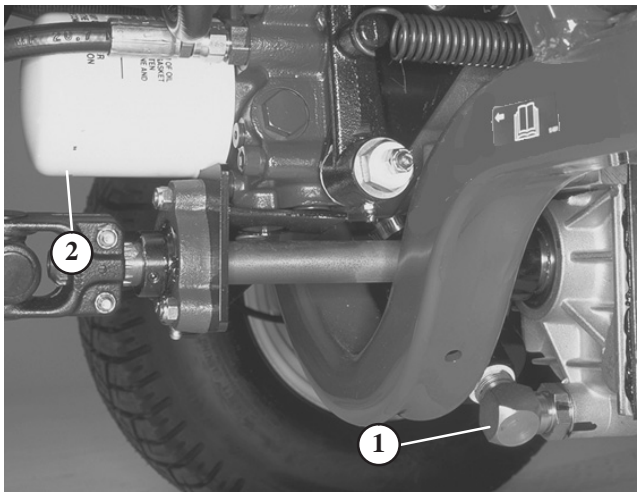

Figure 67

1. Transmission suction line
2. Transmission oil filter

Replacing the Transmission Filter

Change the transmission filter after the first 10 hours of operation and every 800 hours thereafter.

Only the Toro replacement filter (Part No.75-1330) can be used in the hydraulic system.

Important Use of any other filter may void the warranty on some components.

1. Position machine on a level surface, lower the cutting units, stop the engine, engage the parking brakes, and remove key from ignition switch.
2. Clean area around filter mounting area (Fig. 67). Place drain pan under filter and remove filter.
3. Lubricate new filter gasket with hydraulic oil.
4. Ensure that the filter mounting area is clean. Screw filter on until gasket contacts mounting plate. Then tighten filter 1/2 turn.
5. Start engine and let run for about two minutes to purge air from the system. Stop the engine and check for leaks. Check fluid level and replenish if necessary.

Changing the Rear Axle Lubricant

Note: This procedure is for model 03544 only.

After every 800 hours of operation the oil in the rear axle must be changed.

1. Position machine on a level surface.
2. Clean area around the drain plugs (Fig. 68).
3. Remove plug allowing oil to drain into drain pans.
4. After oil is drained, apply thread locking compound on drain plug threads and reinstall in axle.
5. Fill axle with lubricant; refer to Checking the Rear Axle Lubricant, page 22.

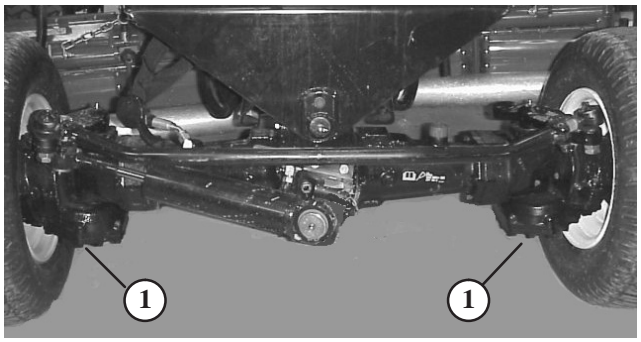

Figure 68

1. Drain plugs

Adjusting Rear Wheel Toe-In

The rear wheels should have 0 to 1/8 in. toe-in when they are pointed straight ahead. To check toe-in, measure the center-to-center distance, at axle height, in front and rear of steering tires. If toe-in is not within specifications, an adjustment is required. After every 800 operating hours or annually, check rear wheel toe-in.

Models 03540 and 03543

1. Rotate the steering wheel so the rear wheels are straight ahead.
2. Loosen the jam nuts on both tie rods (Fig. 69). Adjust both tie rods equally until center-to-center distance at front of rear wheels is 0–1/8 in. (0–3 mm) less than at the rear of the wheels.

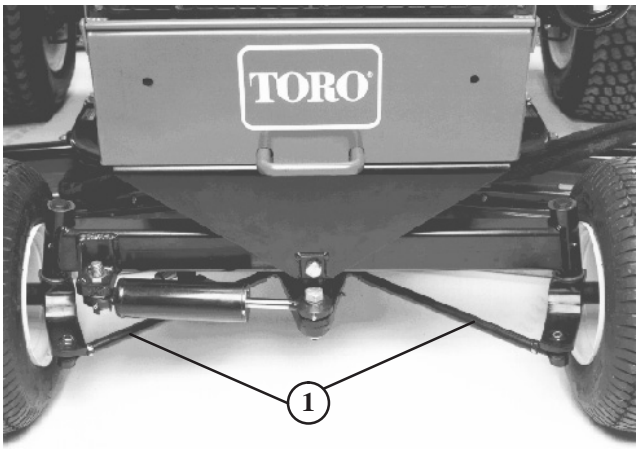

Figure 69

1. Tie rods

3. When toe-in is correct, tighten jam nuts against tie rods.

Models 03544 only

1. Rotate the steering wheel so the rear wheels are straight ahead.

2. Remove the cotter pin and slotted hex nut from either tie rod ball joint. Use a ball joint fork and remove the tie rod ball joint from the axle case support.

3. Loosen clamps on both ends of tie rod (Fig. 70).

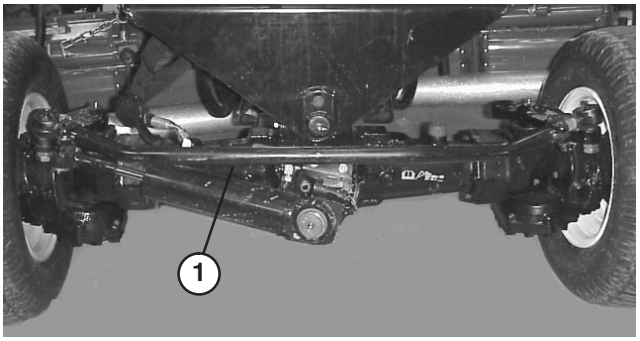

Figure 70

1. Tie rod

4. Rotate the detached ball joint inward or outward one (1) complete revolution. Tighten the clamp at the loose end of the tie rod.

5. Rotate the entire tie rod assembly the same direction (inward or outward) one (1) complete revolution. Tighten the clamp at the connected end of the tie rod.

6. Install the ball joint in the axle case support and tighten the slotted hex nut finger tight.

7. Measure the distance at the front and the rear of the rear wheels at axle height. The distance at the front of the rear wheels should be 0–1/8 in. (0–3 mm) less than the distance measured at the rear of the wheels.

8. Repeat steps 3 through 7 if necessary.

9. Tighten ball joint hex nut and install a new cotter pin.

Servicing the Battery

Warning

CALIFORNIA

Proposition 65 Warning

Battery posts, terminals, and related accessories contain lead and lead compounds, chemicals known to the State of California to cause cancer and reproductive harm. *Wash hands after handling*.

Important Before welding on the machine, disconnect both cables from the battery, disconnect both wire harness plugs from the electronic control unit and the terminal connector from the alternator to prevent damage to the electrical system.

Danger

Battery electrolyte contains sulfuric acid which is a deadly poison and causes severe burns.

- **Do not drink electrolyte and avoid contact with skin, eyes or clothing. Wear safety glasses to shield your eyes and rubber gloves to protect your hands.**
- **Fill the battery where clean water is always available for flushing the skin.**

Warning

Charging the battery produces gasses that can explode.

Never smoke near the battery and keep sparks and flames away from battery.

Note: Check battery condition weekly or after every 50 hours of operation. Keep terminals and entire battery case clean because a dirty battery will discharge slowly. To clean the battery, wash the entire case with solution of baking soda and water. Rinse with clear water. Coat the battery

posts and cable connectors with Grafo 112X (skin-over) grease (Toro Part No. 505-47) or petroleum jelly to prevent corrosion.

Fuses

There are 4 fuses in the machines electrical system. They are located below control panel (Fig. 71 and 72).

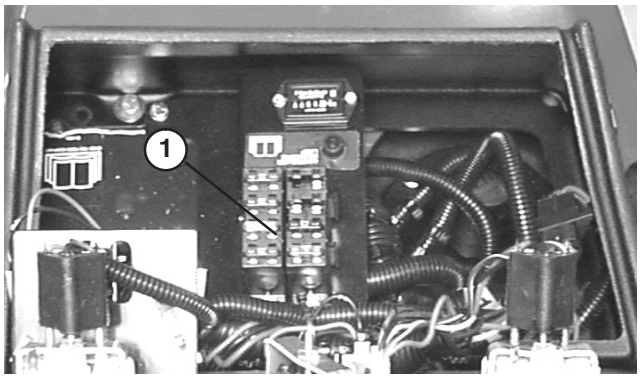

Figure 71

1. Fuses

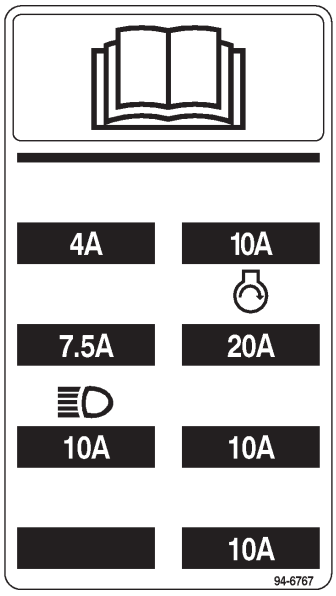

Figure 72

Optional Lighting

Important If optional lighting is be added to the traction unit, use the following schematic and part numbers to prevent damage to the traction units electrical system.

SCHEMATIC FOR OPTIONAL LIGHTING

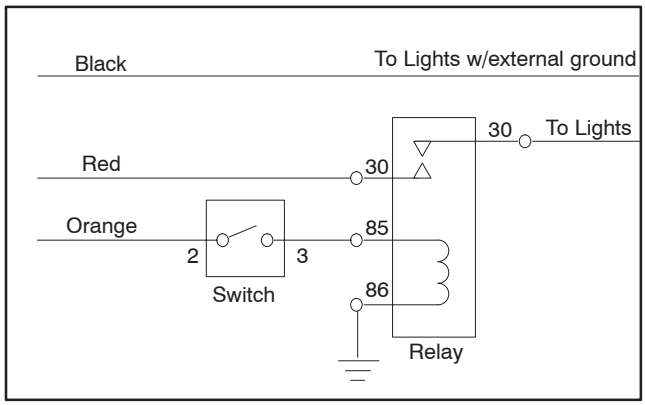

Switch*
Toro Part No. 75–1010
Honeywell Part No. 1TL1–2

Relay
Toro Part No. 70–1480
Bosch Part No. 0–332–204

Black, red and orange wires are located in control console.
Add 10 Amp fuse to fuse block at location shown

*** Punch out in control panel provided for switch installation**

Note: Make sure a good ground is achieved to prevent damage to traction unit.

Backlapping the Cutting Units

Warning

Contact with the reels or other moving parts can result in personal injury.

- **Keep fingers, hands, and clothing away from the reels or other moving parts.**
- **Never attempt to turn the reels by hand or foot while the engine is running.**

Note: When backlapping, the front units all operate together, and the rear units operate together.

1. Position the machine on a level surface, lower the cutting units, stop the engine, engage the parking brake, and move the Enable/Disable switch to disable position.
2. Unlock and raise the seat to expose controls.
3. Make initial reel to bedknife adjustments appropriate for backlapping on all cutting units which are to be backlapped.
4. Start engine and run at **idle speed.**

Danger

Changing the engine speed while backlapping may cause the reels to stall.

- **Never change the engine speed while backlapping.**
- **Only backlap at idle engine speed.**

5. Set both reel speed controls to position 11. Select either front or rear on backlap switch to determine which units to backlap.

Danger

To avoid personal injury, be certain that you are clear of the cutting units before proceeding.

6. Move Enable/Disable switch to Enable position. Move Lower Mow/Lift control forward to start backlapping operation on designated reels.

7. For the cutting units being backlapped, move the reel speed control to position 1.

8. Apply lapping compound with the long handle brush supplied with machine. Never use a short handled brush.

9. If reels stall or become erratic while backlapping, select a higher speed setting until speed stabilizes, then return reel speed to setting 1 or desired speed.

10. To make an adjustment to the cutting units while backlapping, turn reels OFF by moving the Lower Mow/Raise lever rearward; move the Enable/Disable switch to Disable and turn the engine OFF. After adjustments have been completed, repeat steps 5–9.

11. Repeat procedure for all cutting units to be backlapped.

12. When backlap operation has been completed, return the backlap switch to OFF, lower seat and tighten both locking bolts securely, and wash all lapping compound off cutting units. Adjust cutting unit reel to bedknife as needed.

Important If the backlap switch is not returned to OFF position after backlapping, the cutting units will not raise or function properly.

Electrical Schematic

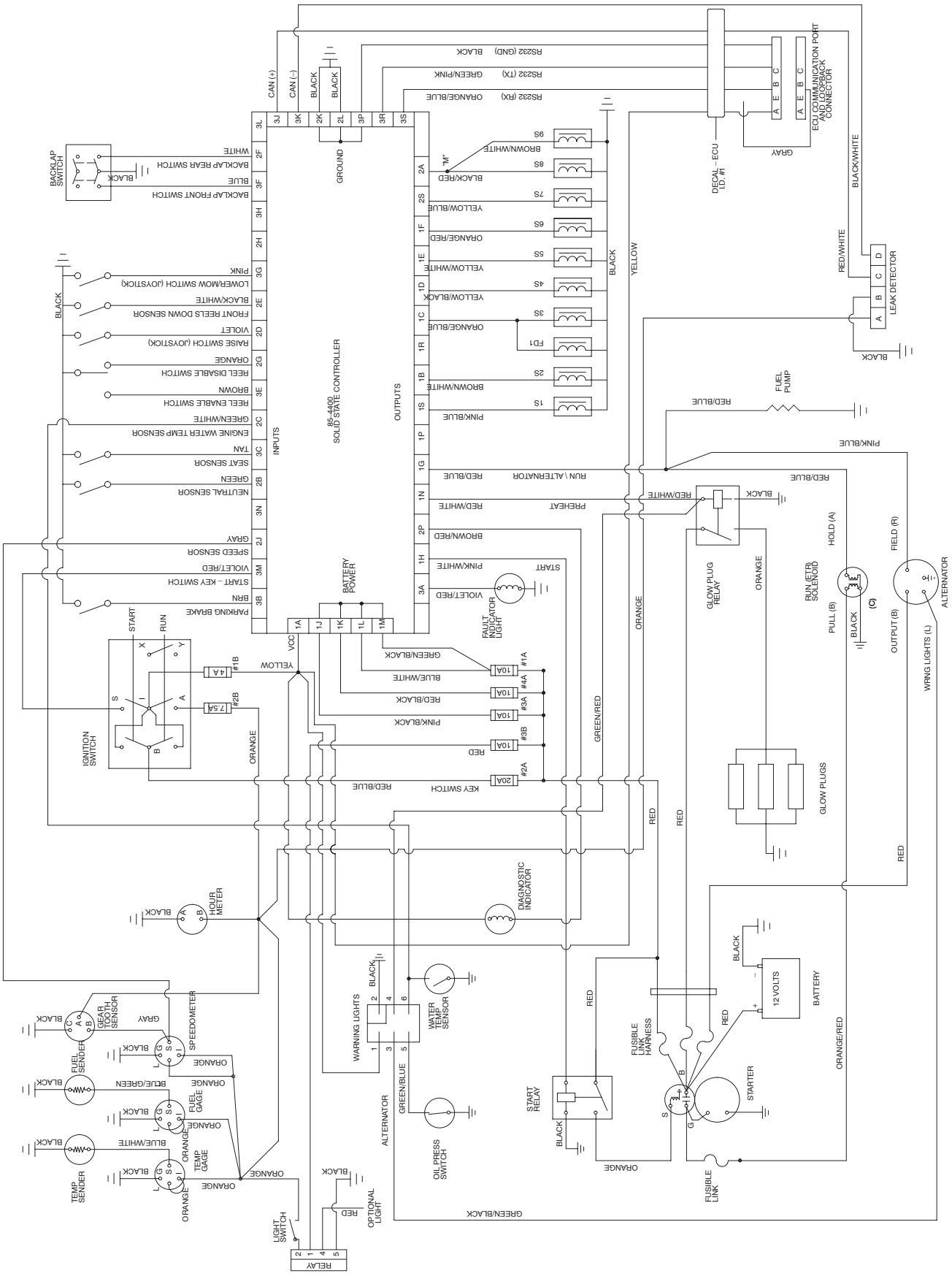

Hydraulic Schematic

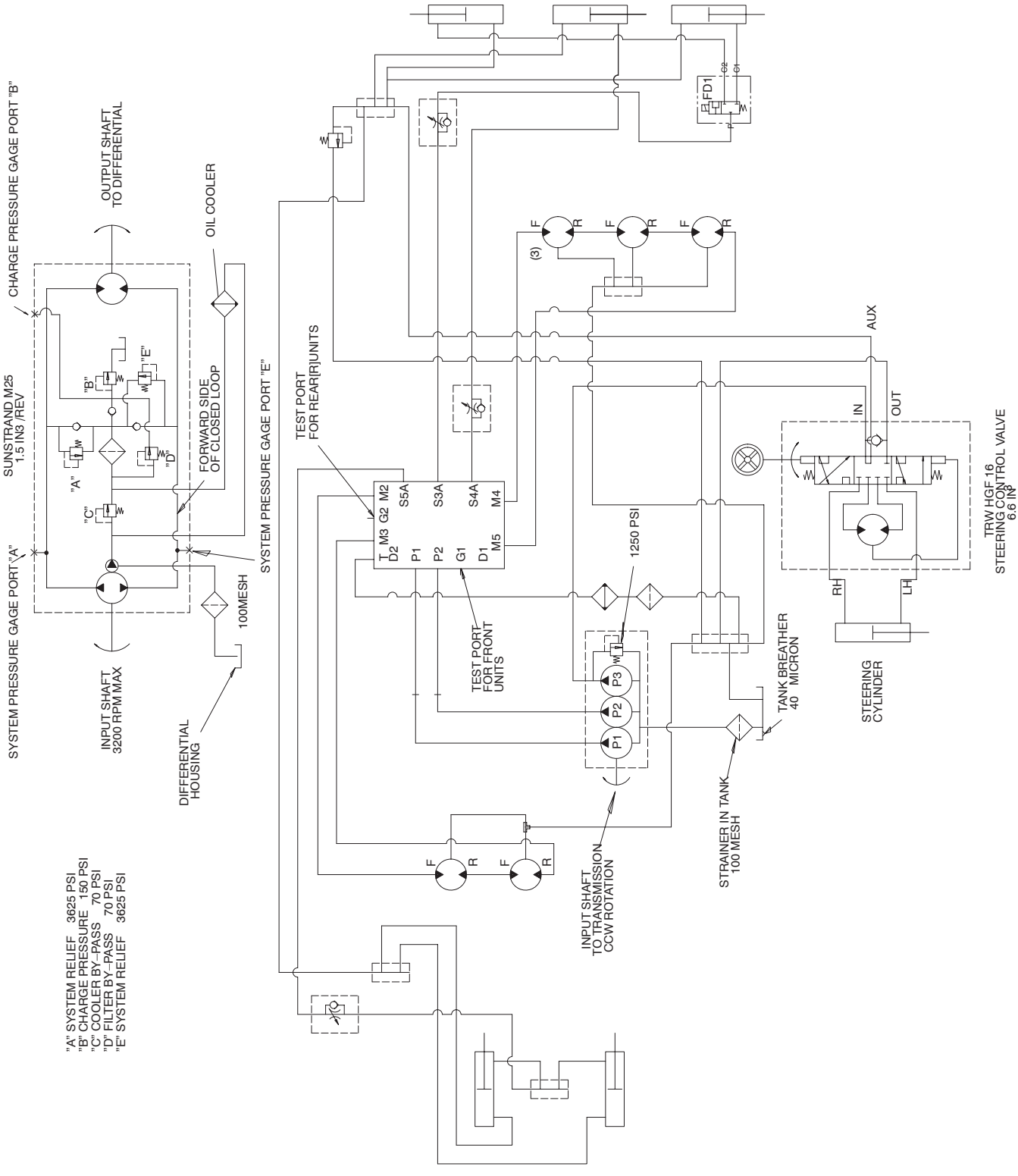

Preparation for Seasonal Storage

Traction Unit

1. Thoroughly clean the traction unit, cutting units and the engine.
2. Check the tire pressure. Inflate all traction unit tires to 15–20 psi.
3. Check all fasteners for looseness; tighten as necessary.
4. Grease or oil all grease fittings and pivot points. Wipe up any excess lubricant.
5. Lightly sand and use touch-up paint on painted areas that are scratched, chipped, or rusted. Repair any dents in the metal body.
6. Service the battery and cables as follows:
   A. Remove the battery terminals from the battery posts.
   B. Clean the battery, terminals, and posts with a wire brush and baking soda solution.
   C. Coat the cable terminals and battery posts with Grafo 112X skin-over grease (Toro Part No. 505-47) or petroleum jelly to prevent corrosion.
   D. Slowly recharge the battery every 60 days for 24 hours to prevent lead sulfation of the battery.

Engine

1. Drain the engine oil from the oil pan and replace the drain plug.
2. Remove and discard the oil filter. Install a new oil filter.
3. Refill oil pan with 4 quarts of motor oil.
4. Start the engine and run at idle speed for approximately two minutes.
5. Stop the engine.
6. Thoroughly drain all fuel from the fuel tank, lines and the fuel filter/water separator assembly.
7. Flush the fuel tank with fresh, clean diesel fuel.
8. Re-secure all fuel system fittings.
9. Thoroughly clean and service the air cleaner assembly.
10. Seal the air cleaner inlet and the exhaust outlet with weatherproof tape.
11. Check anti-freeze protection and add as needed for expected minimum temperature in your area.

The Toro General Commercial Products Warranty

A Two-Year Limited Warranty

Conditions and Products Covered

The Toro Company and its affiliate, Toro Warranty Company, pursuant to an agreement between them, jointly warrant your Toro Commercial Product ("Product") to be free from defects in materials or workmanship for two years or 1500 operational hours*, whichever occurs first. Where a warrantable condition exists, we will repair the Product at no cost to you including diagnosis, labor, parts, and transportation. This warranty begins on the date the Product is delivered to the original retail purchaser.

* Product equipped with hour meter

Instructions for Obtaining Warranty Service

You are responsible for notifying the Commercial Products Distributor or Authorized Commercial Products Dealer from whom you purchased the Product as soon as you believe a warrantable condition exists.

If you need help locating a Commercial Products Distributor or Authorized Dealer, or if you have questions regarding your warranty rights or responsibilities, you may contact us at:

Toro Commercial Products Service Department
Toro Warranty Company
8111 Lyndale Avenue South
Bloomington, MN 55420-1196
952-888-8801 or 800-982-2740
E-mail: commercial.service@toro.com

Owner Responsibilities

As the Product owner, you are responsible for required maintenance and adjustments stated in your operator's manual. Failure to perform required maintenance and adjustments can be grounds for disallowing a warranty claim.

Items and Conditions Not Covered

Not all product failures or malfunctions that occur during the warranty period are defects in materials or workmanship. This express warranty does not cover the following:

- Product failures which result from the use of non-Toro replacement parts, or from installation and use of add-on, modified, or unapproved accessories
- Product failures which result from failure to perform required maintenance and/or adjustments
- Product failures which result from operating the Product in an abusive, negligent or reckless manner
- Parts subject to consumption through use unless found to be defective. Examples of parts which are consumed, or used up, during normal Product operation include, but are not limited to, blades, reels, bedknives, tines, spark plugs, castor wheels, tires, filters, belts, and certain sprayer components such as diaphragms, nozzles, and check valves, etc.
- Failures caused by outside influence. Items considered to be outside influence include, but are not limited to, weather, storage practices, contamination, use of unapproved coolants, lubricants, additives, or chemicals, etc.
- Normal "wear and tear" items. Normal "wear and tear" includes, but is not limited to, damage to seats due to wear or abrasion, worn painted surfaces, scratched decals or windows, etc.

Parts

Parts scheduled for replacement as required maintenance are warranted for the period of time up to the scheduled replacement time for that part.

Parts replaced under this warranty become the property of Toro. Toro will make the final decision whether to repair any existing part or assembly or replace it. Toro may use factory remanufactured parts rather than new parts for some warranty repairs.

General Conditions

Repair by an Authorized Toro Distributor or Dealer is your sole remedy under this warranty.

Neither The Toro Company nor Toro Warranty Company is liable for indirect, incidental or consequential damages in connection with the use of the Toro Products covered by this warranty, including any cost or expense of providing substitute equipment or service during reasonable periods of malfunction or non-use pending completion of repairs under this warranty. Except for the Emissions warranty referenced below, if applicable, there is no other express warranty. All implied warranties of merchantability and fitness for use are limited to the duration of this express warranty.

Some states do not allow exclusions of incidental or consequential damages, or limitations on how long an implied warranty lasts, so the above exclusions and limitations may not apply to you.

This warranty gives you specific legal rights, and you may also have other rights which vary from state to state.

Note regarding engine warranty: The Emissions Control System on your Product may be covered by a separate warranty meeting requirements established by the U.S. Environmental Protection Agency (EPA) and/or the California Air Resources Board (CARB). The hour limitations set forth above do not apply to the Emissions Control System Warranty. Refer to the Engine Emission Control Warranty Statement printed in your operator's manual or contained in the engine manufacturer's documentation for details.

Countries Other than the United States or Canada

Customers who have purchased Toro products exported from the United States or Canada should contact their Toro Distributor (Dealer) to obtain guarantee policies for your country, province, or state. If for any reason you are dissatisfied with your Distributor's service or have difficulty obtaining guarantee information, contact the Toro importer. If all other remedies fail, you may contact us at Toro Warranty Company.

Part No. 374-0031 Rev. C