FORM NO. 3313-161 Rev A

TORO®

MODEL NO. 20624-7000001 & Up

PARTS CATALOG

21″ S.P. REAR BAGGER KEY LECTRIC

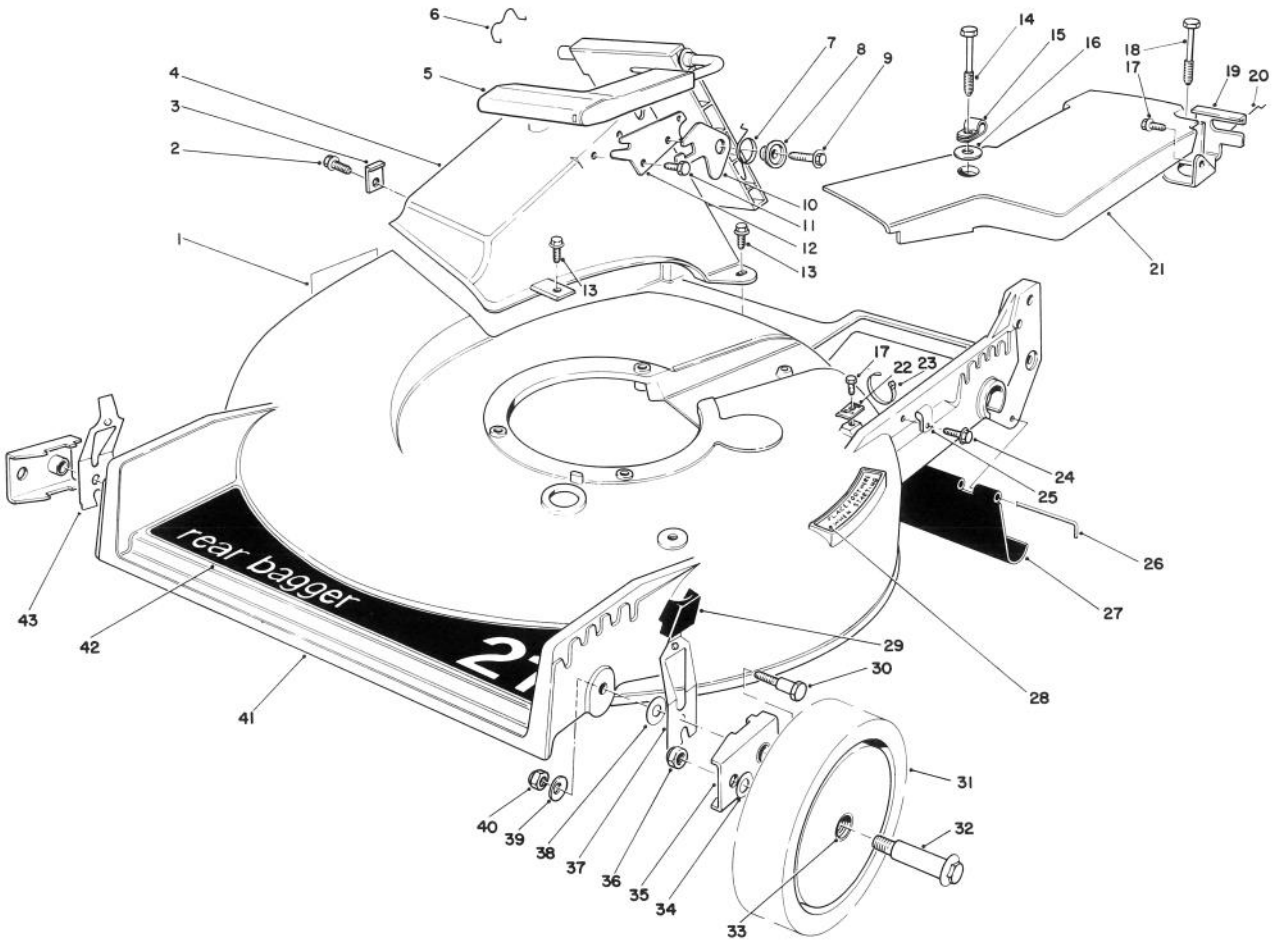

HOUSING ASSEMBLY

Ref. No.	Part No.	Description	No. Used
1	43-8480	Decal — Danger	1
2	12-3270	Screw — Thread Forming	1
3	47-6540	Clip — Tunnel	1
4	46-3500	Tunnel — Discharge	1
5	51-0200	Discharge Door Assembly	1
6	47-5840	Retainer — Door	1
7	33-4860	Spring — Torsion	1
8	43-4840	Spacer — Latch	1
9	46-8091	Screw — Self Tapping, Hex Washer Hd.	1
10	42-4010	Latch — Safety	1
11	46-8090	Screw — Self Tapping, Hex Washer Hd.	1
12	23-1040	Plate — Latch	1
13	46-6811	Screw — Hex Washer Hd.	3
14	37-7262	Capscrew — Special	1
15	2412-87	Clamp — Cable	1
16	3-5792	Washer — Flat	1
17	32144-11	Screw — Thread Forming, Hex Washer Hd.	2
18	37-7260	Capscrew — Special	1
19	62-3940	Bracket — Traction Adjustment	1
20	46-7030	Retainer — Cable	1
21	62-4310	Belt Cover	1
22	62-3720	Clamp — Cable	1
23	3290-378	Cable Tie	1
24	12-5450	Screw — Self Tapping, Slotted Hex Hd.	1

©The Toro Company — 1987

PRICE $1.00

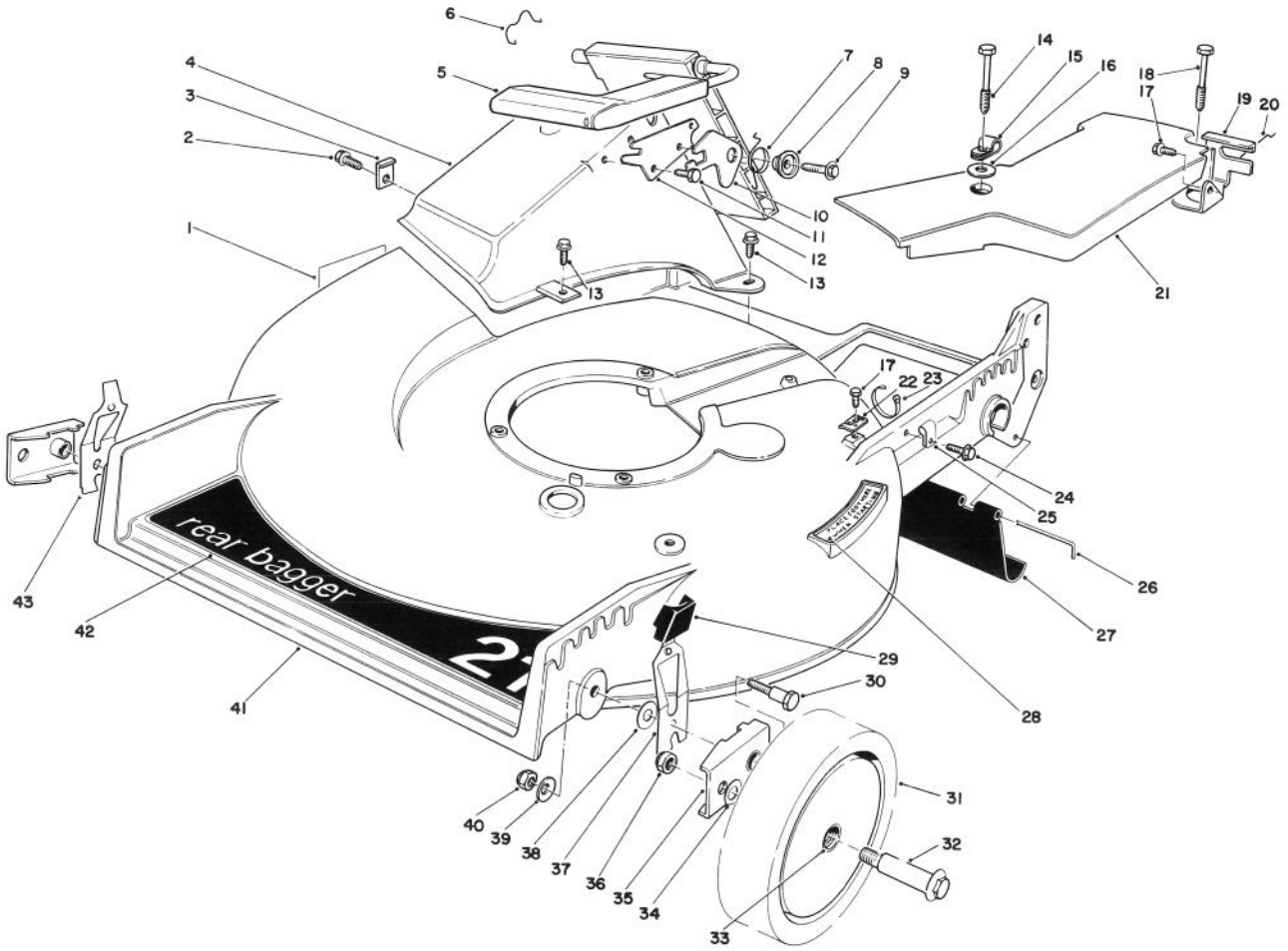

HOUSING ASSEMBLY (Continued)

Ref. No.	Part No.	Description	No. Used
25	2412-83	R-Clamp	1
26	33-3208	Rod — Shield	1
27	44-0580	Shield — Rear	1
28	46-7370	Decal — Step Pad	1
29	25-7740	Knob — Spring Arm	2
30	44-5270	Screw — Pivot	2
31	11-9509	Wheel & Tire Assembly (Incl. Ref. #33)	2
32	27-6230	Bolt — Wheel	2
33	27-6250	Bushing — Wheel	4

Ref. No.	Part No.	Description	No. Used
34	40-1940	Washer — Wheel Bolt	2
35	47-2940	Arm — Pivot	2
36	52-3620	Locknut	2
37	52-7480	Spring Arm Assembly L.H.	1
38	5-4460	Washer — Pivot	2
39	3290-456	Washer — Belleville	2
40	3296-29	Locknut	2
41	11-4099	Housing (Incl. Ref. #1, 13 & 28)	1
42	44-0450	Decal — 21" Rear Bagger	1
43	52-7490	Spring Arm Assembly R.H.	1

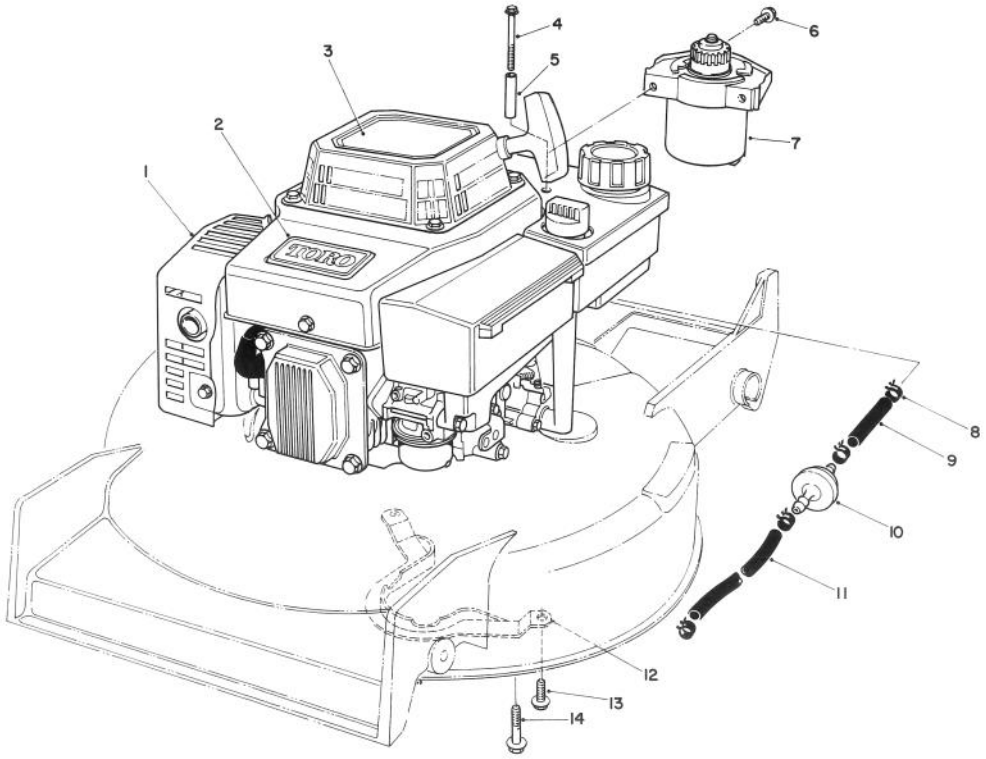

ENGINE ASSEMBLY
(MODEL NO. VMF5)
(used on units with Serial No. 7000001-7001733)

Ref. No.	Part No.	Description	No. Used
1		Engine — Complete	1
2	46-8290	Plate — Toro	1
3	55-8070	Decal — Recoil	1
4	56-6610	Screw — Thread Forming	2
5	57-3830	Spacer — Tubular	2
6	56-6380	Screw — Thread Forming	2
7	53-4500	Starter Motor Assembly	1
8	2412-95	Clamp — Fuel Line	4

Ref. No.	Part No.	Description	No. Used
9	51-3211	Line — Fuel	1
10	56-6360	Filter — Fuel	1
11	51-3214	Line — Fuel	1
12	40-5720	Guide — Belt	1
13	11-9760	Screw — Thread Forming	2
14	11-0590	Screw — Thread Forming	4
*	56-6680	Tube — Oil Drain	1

* Not Illustrated

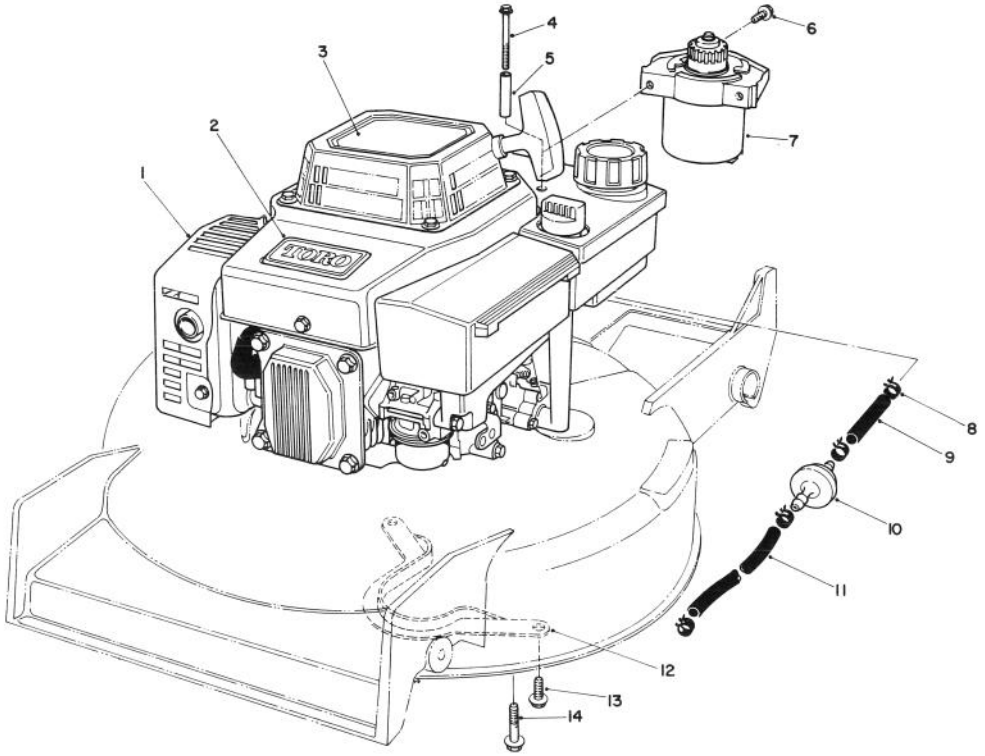

ENGINE ASSEMBLY
(MODEL NO. VMG6)
(used on units with Serial No. 7001734 & up)

Ref. No.	Part No.	Description	No. Used
1	62-5442	Engine — Complete	1
2	46-8290	Plate — Toro	1
3	55-8070	Decal — Recoil	1
4	56-6610	Screw — Thread Forming	2
5	57-3830	Spacer — Tubular	2
6	56-6380	Screw — Thread Forming	2
7	53-4500	Starter Motor Assembly	1
8	2412-95	Clamp — Fuel Line	4

Ref. No.	Part No.	Description	No. Used
9	51-3211	Line — Fuel	1
10	56-6360	Filter — Fuel	1
11	51-3214	Line — Fuel	1
12	62-3780	Guide — Belt	1
13	11-9760	Screw — Thread Forming	2
14	11-0590	Screw — Thread Forming	4
*	56-6680	Tube — Oil Drain	1

* Not Illustrated

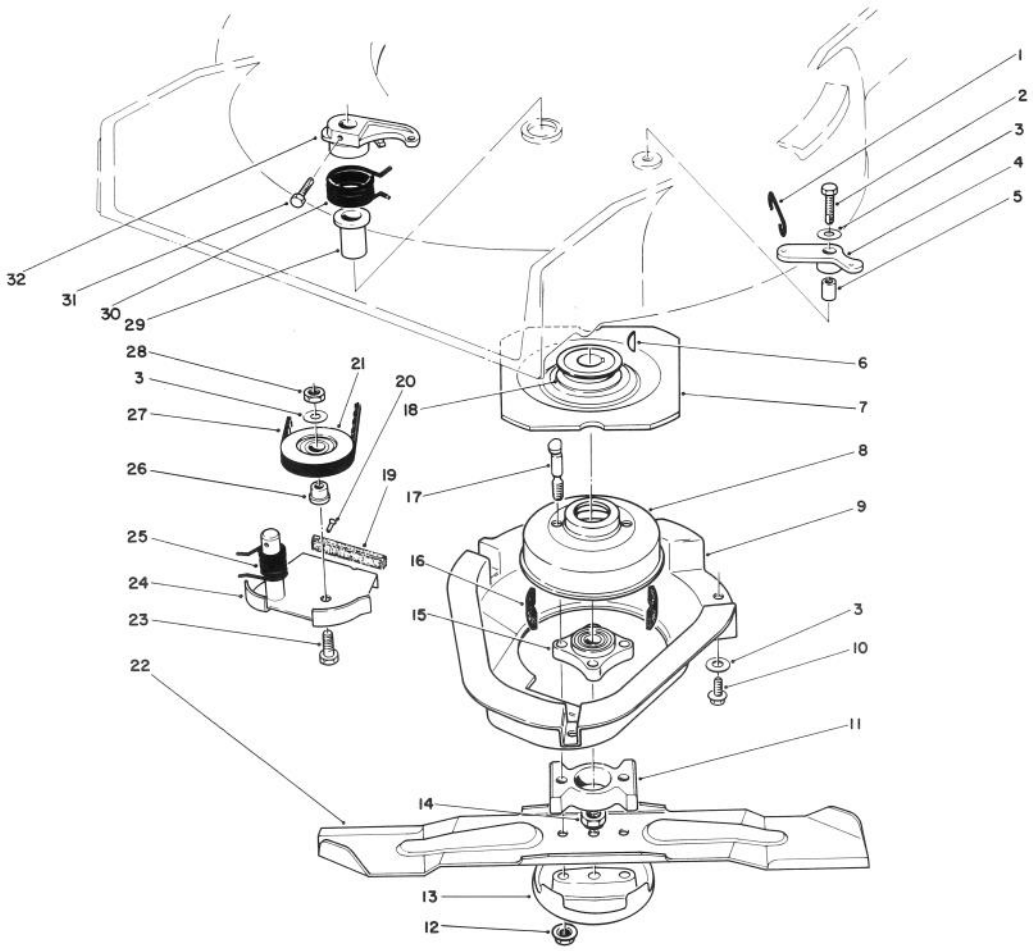

BLADE & BRAKE CLUTCH ASSEMBLY

Ref. No.	Part No.	Description	No. Used
1	49-2810	Link — Control	1
2	32104-107	Screw — Hex Hd. Self Tapping	1
3	3256-23	Washer — Plain	5
4	49-7960	Crank — Bell	1
5	49-7950	Sleeve — Bell Crank	1
6	3257-3	Key — Woodruff	1
7	56-6160	Flywheel	1
8	56-6170	Drum — Brake	1
9	46-5690	Shield	1
10	32144-11	Screw — Hex Washer Hd.	3
11	42-6760	Spacer — Blade	1
12	54-9190	Locknut	2
13	42-0910	Cup — Anti Scalp	1
14	3296-33	Locknut	1
15	42-6890	Hub Assembly	1
16	52-3480	Dampener — Vibration	2
17	42-3190	Bolt — Brake	2
18	56-6180	Pulley Driver (Used on units with serial no. 7000001-7049999)	1

Ref. No.	Part No.	Description	No. Used
18	62-7560	Pulley Driver (Used on units with serial no. 7050000 & up)	1
19		Pad — Brake	1
20	3295-23	Rivet — Semi Tubular	2
21	46-5650	Pulley — Idler	1
22	42-1000	Blade — 21"	1
23	322-16	Capscrew — Hex Hd.	1
24	49-7921	Brake Plate (Incl. Ref. #19 & 20)	1
25	46-5670	Spring — Torsion Lower	1
26	46-5630	Hub — Idler Pulley	1
27	42-0884	V-Belt	1
28	3296-47	Locknut	1
29	46-6680	Bushing — Flanged	1
30	49-7970	Spring — Torsion Upper	1
31	32104-96	Screw — Hex Hd. Self Tapping	1
32	49-2820	Lever	1

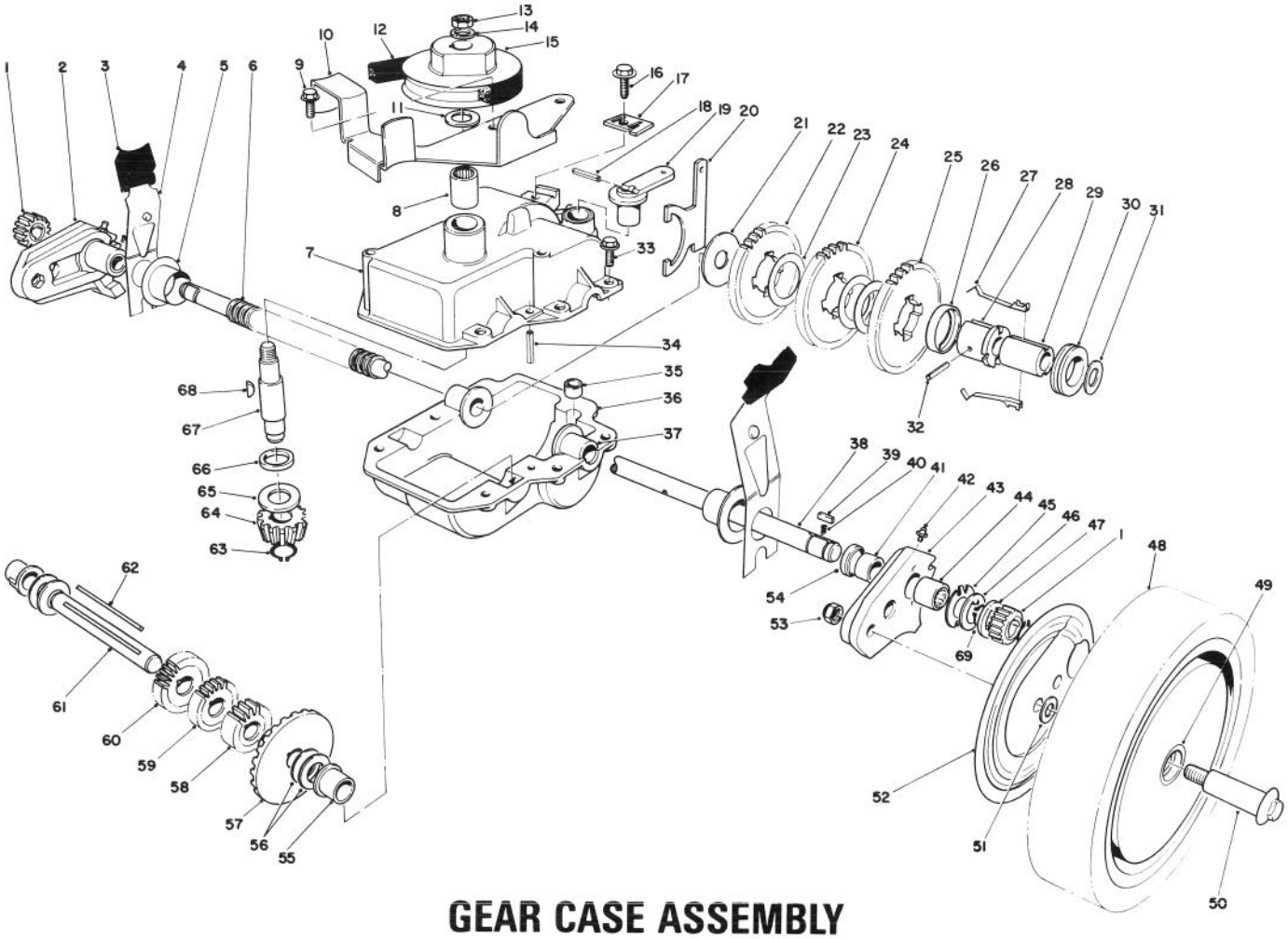

GEAR CASE ASSEMBLY
(used on units with Serial No. 7000001-7049999)

Ref. No.	Part No.	Description	No. Used
1	39-9160	Pinion	2
2	49-7720	Pivot Arm Assembly — R.H. (Incl. Ref. #41, 42, 44 & 54)	1
3	25-7740	Knob — Arm	2
4	44-1010	Spring Arm Assembly	2
5	42-3520	End Cap	2
6	24-7922	Cover — Drive Shaft	1
7	39-7283	Upper Case	1
8	47-6720	Bearing	1
9	12-3270	Screw — Special	2
10	49-8460	Bracket — Belt Guide	1
11	36-4790	Washer — Thrust	1
12	36-8070	V-Belt	1
13	3296-5	Locknut	1
14	3256-45	Washer	1
15	39-6740	Pulley	1
16	32144-11	Screw — Thread Forming	1
17	46-5610	Cable Clamp	1
18	32121-99	Coil Pin	1
19	29-9560	Lever — Shift	1
20	29-9520	Shift Yoke	1
21	29-9690	Washer	1
22	42-4740	Gear — 38T	1

Ref. No.	Part No.	Description	No. Used
23	36-4770	Spacer — Gear	3
24	29-9271	Gear — 42T	1
25	46-3560	Gear — 52T	1
26	55-8020	Key Retainer	1
27	29-9330	Key	2
28	55-8010	Sleeve — Body	1
29	39-6720	Sleeve	1
30	29-9340	Shift Collar	1
31	36-4780	Washer	1
32	32121-106	Coil Pin	1
33	49-2040	Screw — Tapping	6
34	32121-100	Roll Pin	1
35	29-9570	Bushing — Yoke	1
36	29-9410	Lower Case	1
37	47-5220	Bushing — Output Shaft	2
38	12-6659	Output Shaft (Incl. Ref. #47 & 69)	1
39	39-9680	Key — Rectangular	2
40	39-9650	Spring	2
41	47-2890	Bushing	2
42	302-56	Fitting Grease	2
43	49-7710	Pivot Arm Assembly — L.H. (Incl. Ref. #41, 42, 44 & 54)	1

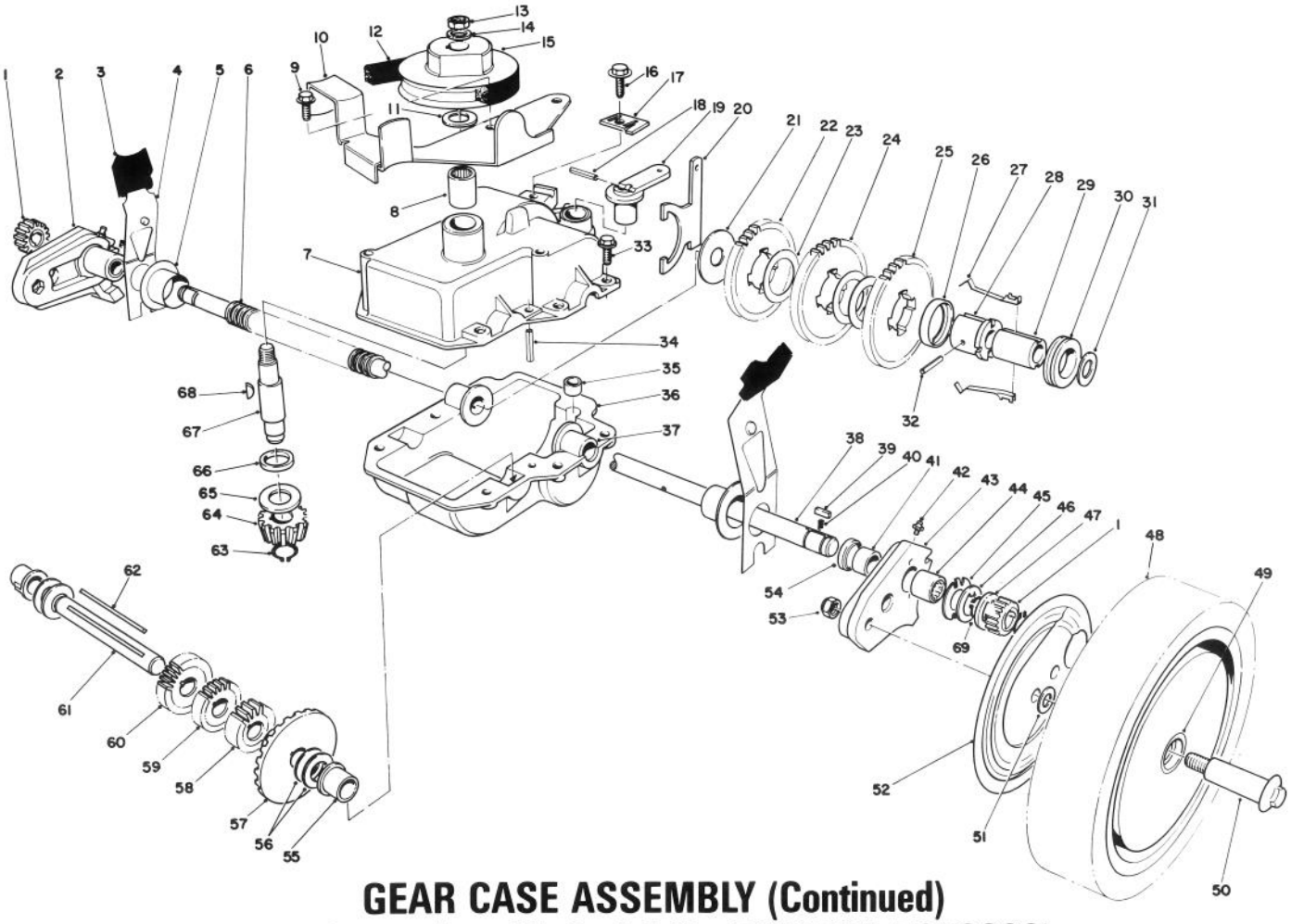

GEAR CASE ASSEMBLY (Continued)
(used on units with Serial No. 7000001-7049999)

Ref. No.	Part No.	Description	No. Used
44	48-2060	Needle Bearing	2
45	49-7690	Washer — Thrust, Inner	2
46	49-7700	Washer — Thrust, Outer	2
47	62-3830	Washer — Thrust, Outer (used on units with serial no. 7001734-7049999)	2
48	51-2741	Wheel, Tire & Gear Assembly (Incl. Ref. #49)	2
49	27-6250	Bushing — Wheel	4
50	27-6231	Wheel Bolt	2
51	40-1940	Washer — Wheel Bolt	2
52	52-4860	Cover — Wheel	2
53	52-3620	Nut — Lock	2
54	47-6730	Seal	2
55	52-5410	Bushing — Short Shaft	2
56	36-4791	Washer — Thrust	4
57	39-6670	Gear — Bevel	1
58	46-3540	Gear — 12 Tooth	1

Ref. No.	Part No.	Description	No. Used
59	46-3550	Gear — 14 Tooth	1
60	39-6650	Gear — 18 Tooth	1
61	46-9470	Shaft — Intermediate	1
62	39-7843	Key — Square	1
63	32151-57	Ring — Retaining	1
64	39-6660	Pinion — Bevel	1
65	47-2910	Washer — Thrust	1
66	47-7260	Seal	1
67	39-6690	Input Shaft	1
68	3257-1	Key — Woodruff	2
69	32151-68	Retaining Ring	4
*	46-3580	Gear Case Assembly Complete (used on units with serial no. 7000001-7001733)	1
*	46-3582	Gear Case Assembly Complete (used on units with serial no. 7001734-7049999	1

* Not Illustrated

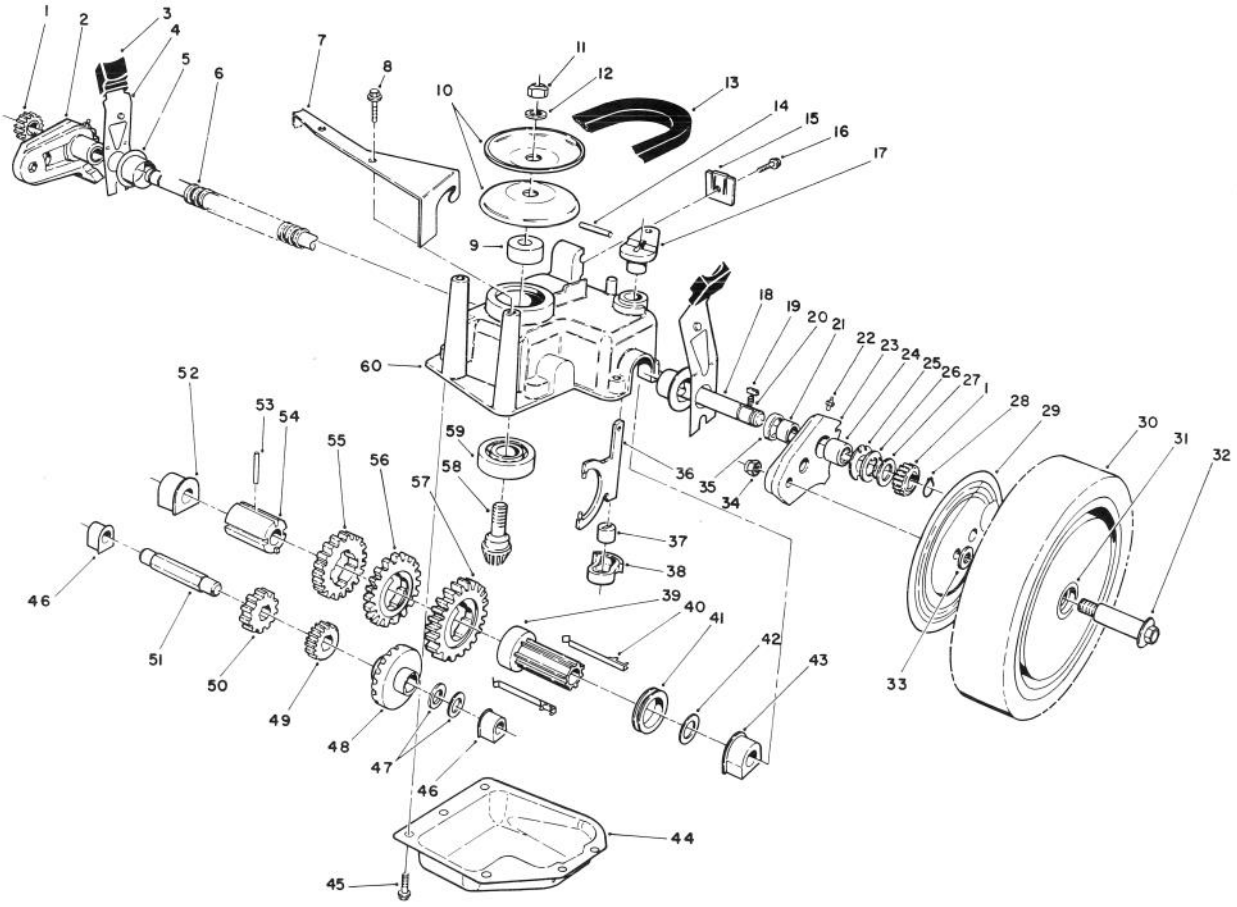

GEAR CASE ASSEMBLY
(used on units with Serial No. 7050000 & up)

Ref. No.	Part No.	Description	No. Used
1	39-9160	Pinion	2
2	49-7720	Pivot Arm Assembly — R.H. (Incl. Ref. #21, 22, 24 & 35)	1
3	25-7740	Knob — Arm	2
4	44-1010	Spring Arm Assembly	2
5	42-3520	End Cap	2
6	24-7922	Cover — Drive Shaft	1
7	62-4320	Bracket — Belt Guide	1
8	49-2040	Screw — Self Tapping	2
9	60-6660	Spacer	1
10	60-8840	Pulley — Half	2
11	3296-5	Nut — Lock	1
12	3256-24	Washer — Flat	1
13	62-3900	V-Belt	1
14	32121-99	Pin — Coil	1
15	46-5610	Cable Clamp	1
16	32144-11	Screw — Thread Forming	1
17	60-8820	Lever — Shift	1
18	62-3280	Shaft — Output	1
19	39-9680	Key — Rectangular	2
20	39-9650	Spring	2
21	47-2890	Bushing	2

Ref. No.	Part No.	Description	No. Used
22	302-56	Fitting — Grease	2
23	49-7710	Pivot Arm Assembly — L.H. (Incl. Ref. #21, 22, 24 & 35)	1
24	48-2060	Needle Bearing	2
25	49-7690	Washer — Thrust, Inner	2
26	49-7700	Washer — Thrust, Outer	2
27	62-3830	Washer — Thrust, Outer	2
28	32121-68	Retaining Ring	4
29	52-4860	Cover — Wheel	2
30	51-2741	Wheel — Tire & Gear Assy. (Incl. Ref. #31)	2
31	27-6250	Bushing — Wheel	4
32	27-6231	Wheel Bolt	2
33	40-1940	Washer — Wheel Bolt	4
34	52-3620	Nut — Lock	2
35	47-6730	Oil Seal	2
36	60-8870	Yoke — Shift	1
37	29-9570	Bushing — Yoke	1
38	60-8810	Retainer — Shift Fork	1
39	60-8780	Sleeve — Shift Key	1
40	60-8740	Key — Shift	2
41	60-8760	Collar — Shift	1

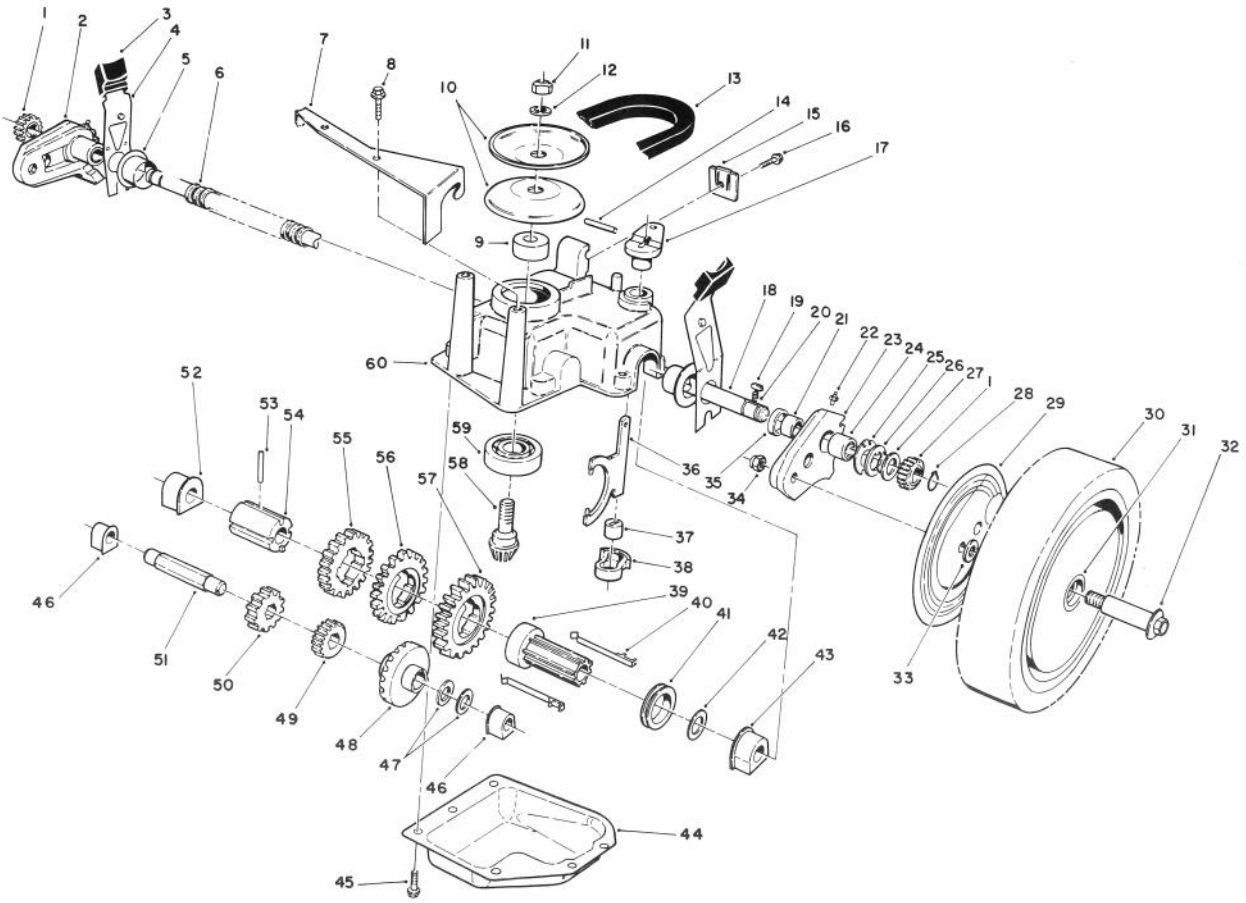

GEAR CASE ASSEMBLY (Continued)
(used on units with Serial No. 7050000 & up)

Ref. No.	Part No.	Description	No. Used
42	36-4780	Washer — Thrust	1
43	60-8770	Bushing — Output Shaft	1
44	60-8730	Cover — Gear Case	1
45	49-2040	Screw — Hex Washer Hd. Taptite	6
46	60-8750	Bushing — Int. Shaft	2
47	36-4791	Washer — Thrust	2
48	55-3760	Gear — Pinion 15 Tooth	1
49	55-3780	Gear — Pinion 20 Tooth	1
50	55-3800	Gear — Pinion 25 Tooth	1
51	60-8800	Shaft — Intermediate	1

Ref. No.	Part No.	Description	No. Used
52	60-8850	Bushing — Output Shaft	1
53	32121-106	Pin — Coil	1
54	60-8790	Sleeve Gear	1
55	55-3810	Gear — 39 Tooth 3rd Gear	1
56	55-3790	Gear — 44 Tooth 2nd Gear	1
57	55-3770	Gear — 49 Tooth 1st Gear	1
58	60-8890	Pinion — Bevel	1
59	38-7820	Bearing — Ball	1
60	60-8710	Gear Case — Upper	1
*	62-6670	Gear Case Complete	1

* Not Illustrated

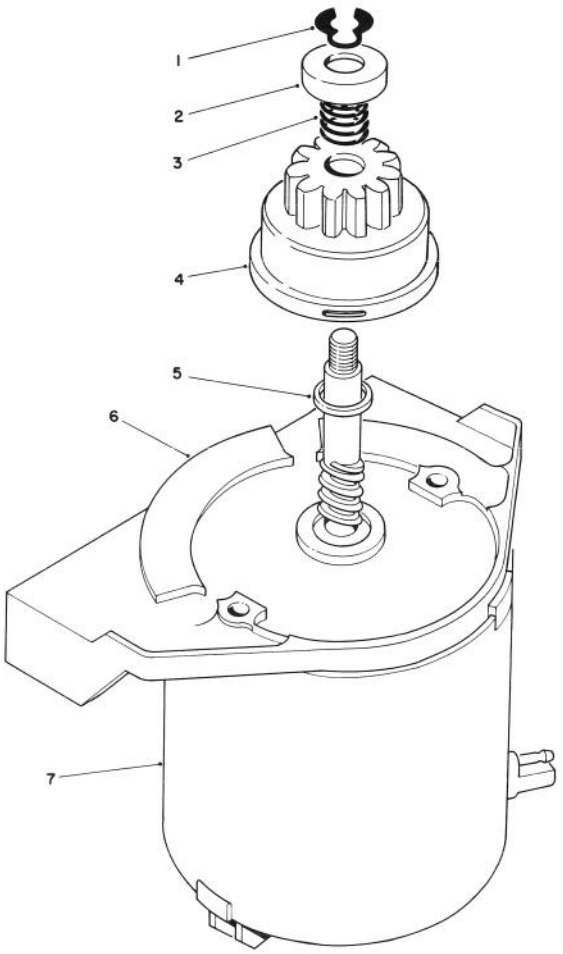

STARTER MOTOR ASSEMBLY NO. 53-4500

Ref. No.	Part No.	Description	No. Used
1	32151-47	Ring — Retaining	1
2	49-2170	Pinion Stop	1
3	44-0500	Spring — Compression	1
4	43-4370	Pinion Assembly	1

Ref. No.	Part No.	Description	No. Used
5	23-9591	Spacer	1
6	53-4500	Motor — Starter (Incl. Ref. #7)	1
7	53-4460	Frame — End	1

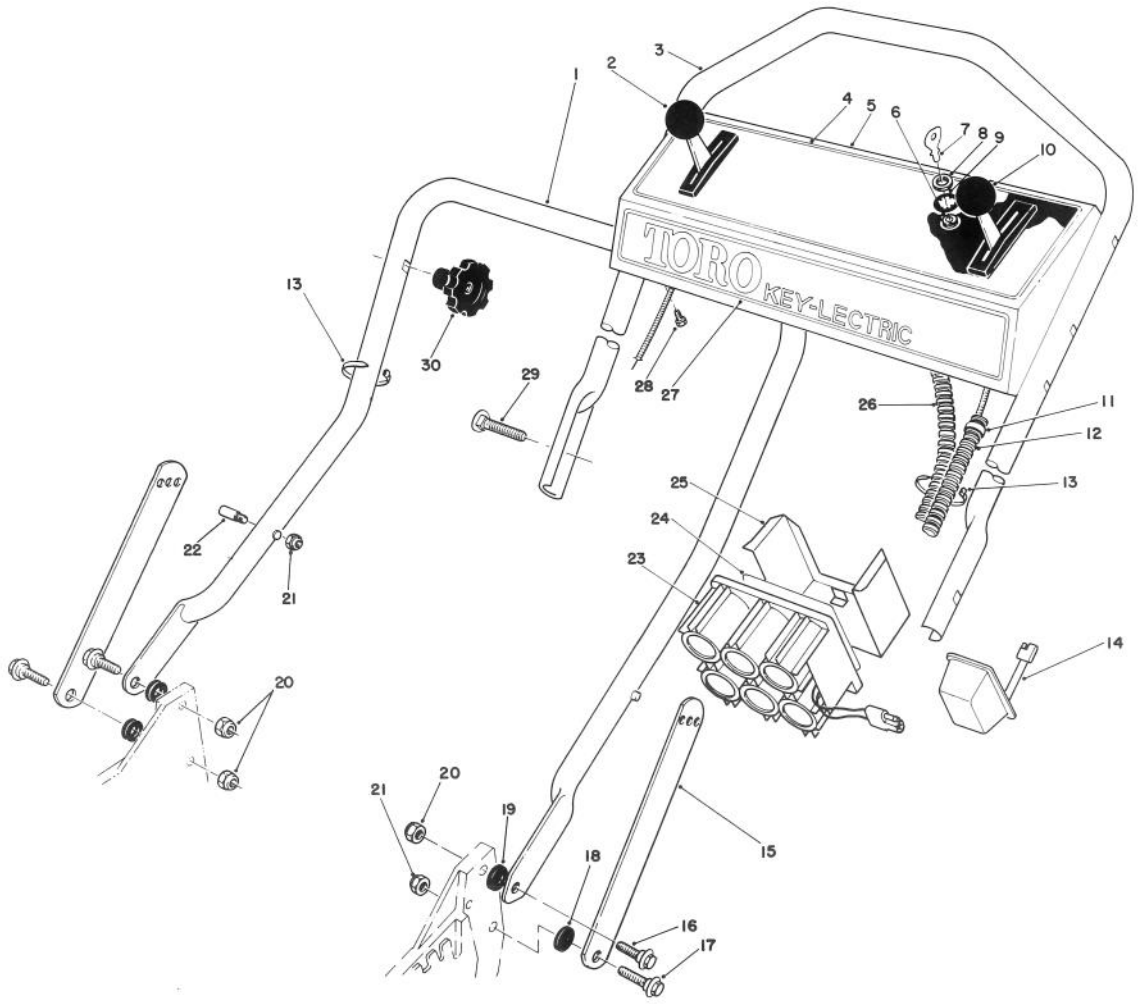

HANDLE ASSEMBLY

Ref. No.	Part No.	Description	No. Used
1	43-1361	Handle — Lower	1
2	46-5430	Control — Ground Speed	
		Bend Type #1	
		Sheath Lg. 42-1/4 inch	
		Wire Lg. 2-1/4 inch	1
3	46-5411	Handle — Upper	1
4	53-4780	Decal — Instruction Panel	1
5	12-2369	Panel — Control	
		(Incl. Ref. #4)	1
6	46-5780	Switch — Starter	
		(Incl. Ref. #7-9)	1
7	218-412	Keys (Set of 2)	1
8	218-461	Nut	1
9	3254-5	Lockwasher	1
10	49-4183	Control — Throttle	
		Sheath Lg. 55-7/8 inch	
		Wire Lg. 2-1/2 inch	1
11	2412-50	Clip — Convoluted Tubing	4
12	46-6440	Cover — Control Cables	1

Ref. No.	Part No.	Description	No. Used
13	3290-378	Cable Tie	4
14	6-9780	Charger — Battery	1
15	43-1370	Latch — Handle	2
16	27-7211	Screw — Shoulder	2
17	27-7210	Screw — Shoulder	2
18	3-3287	Spacer — Handle Latch	2
19	55-8060	Spacer	2
20	3296-29	Locknut	3
21	3296-47	Locknut	3
22†	49-2750	Pin — Handle	2
23	55-7520	Battery	1
24	55-8190	Decal — Charging Instructions	1
25	55-8180	Retainer — Battery	1
26	49-8311	Wire Harness Assembly	1
27	46-8460	Decal — Toro Key-Lectric	1
28	32104-76	Screw — Tapping	4
29	17-9421	Screw — Handle	2
30	19-4050	Knob — Handle Release	2

† Service Replacement Parts

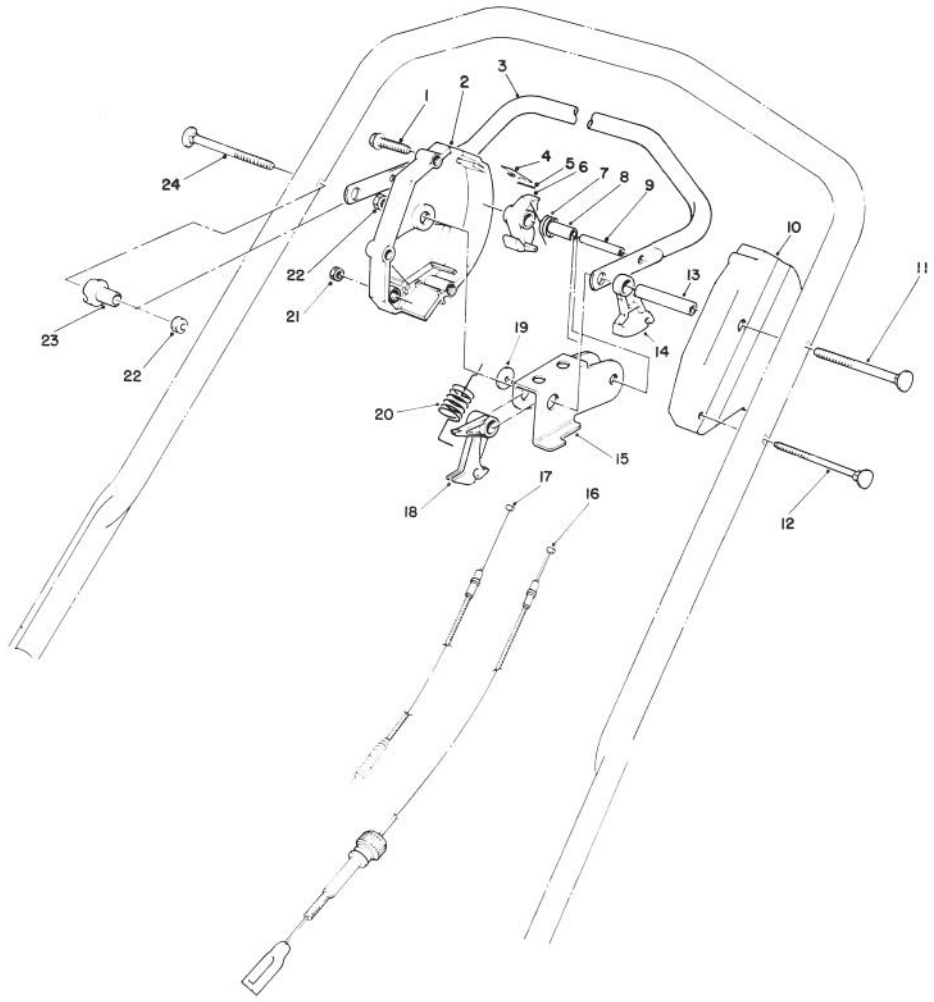

TRACTION CONTROL ASSEMBLY

Ref. No.	Part No.	Description	No. Used
1	46-7040	Screw — Thread Forming Hex Washer Hd.	3
2	12-3429	Housing — Control R.H. Assy. (Incl. Ref. #4 & 5)	1
3	52-7430	Control Bar Assembly	1
4	52-7410	Spring — Leaf	1
5	57-6290	Pin — Insert	1
6	46-5530	Hook — Control	1
7	46-5510	Spring — Torsion	1
8	46-5550	Bushing — P.M.	1
9	32121-9	Pin — Coil	1
10	46-5460	Housing — Control L.H.	1
11	17-9422	Screw — Handle	1

Ref. No.	Part No.	Description	No. Used
12	46-6431	Screw — Handle	1
13	46-5590	Spacer	1
14	46-5520	Lever — Traction	1
15	62-3710	Rocker	1
16	46-5480	Cable — Traction	1
17	62-3770	Cable — Clutch	1
18	46-5540	Lever — Cable	1
19	46-5600	Washer — Nylon	1
20	49-8020	Spring — Extension	1
21	3296-42	Locknut	1
22	3296-58	Locknut	2
23	49-1630	Support — Spacer	1
24	17-9421	Screw — Handle	1

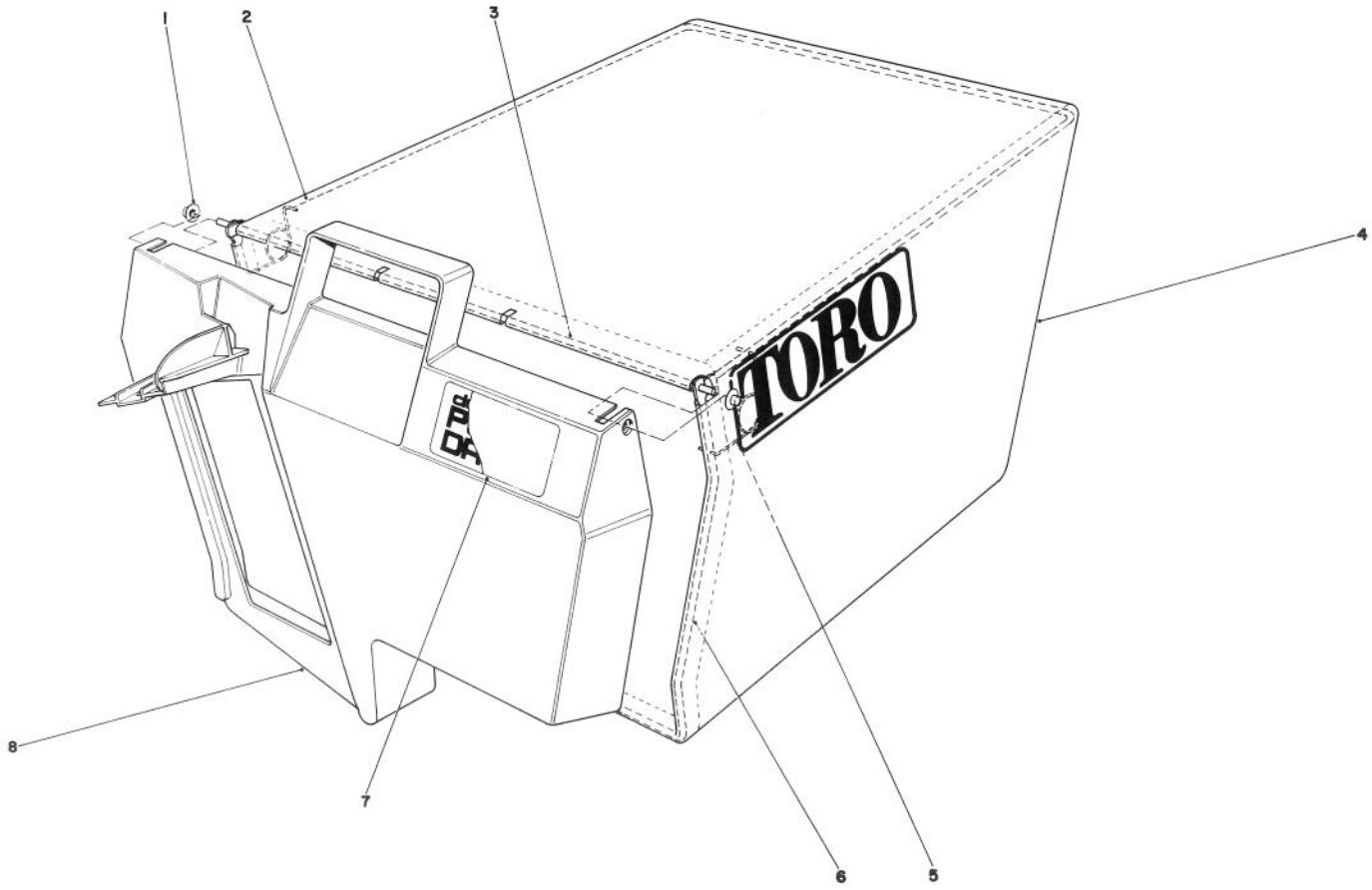

GRASS BAG ASSEMBLY NO. 11-0189

Ref. No.	Part No.	Description	No. Used
1	3290-422	Push Nut	2
2	42-4030	Bag Frame Upper	1
3	33-4820	Hinge Bag Door	1
4	8-2759	Grass Bag	1

Ref. No.	Part No.	Description	No. Used
5	36-6910	Spring	2
6	42-4020	Frame Bag	1
7	40-2240	Decal — Bag Door	1
8	37-1392	Door Grass Bag	1

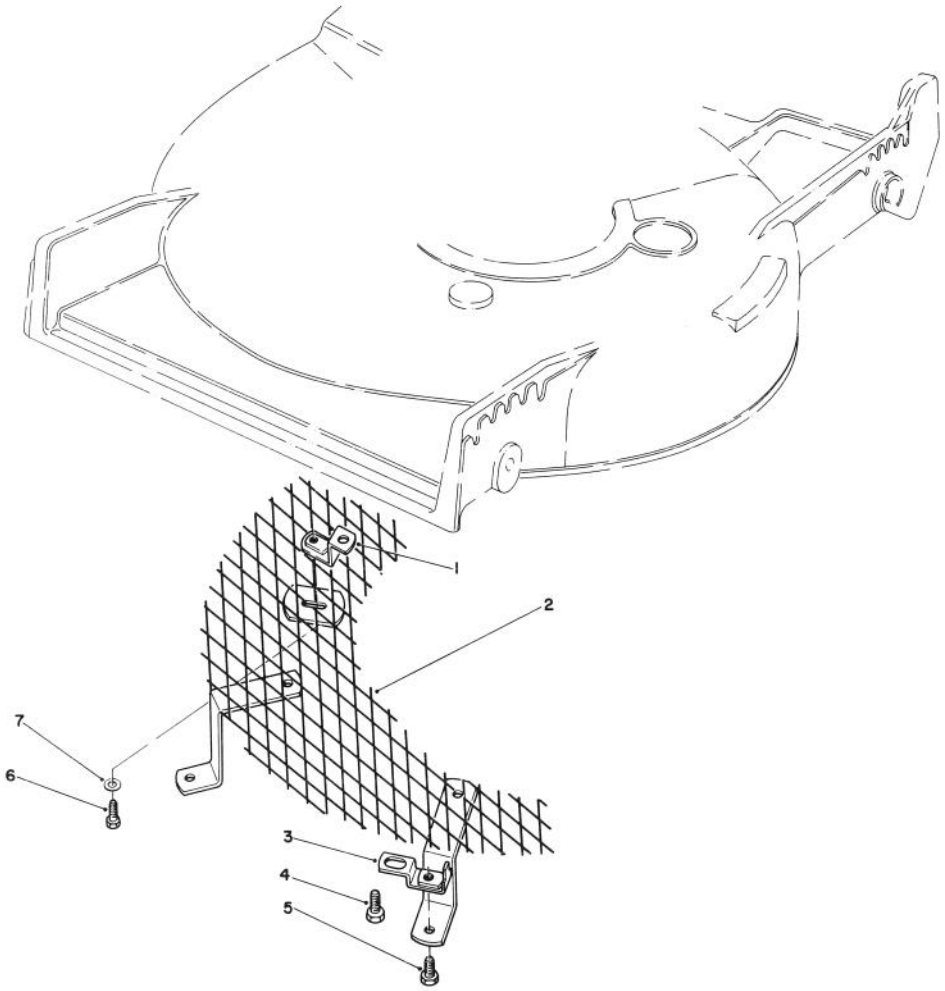

LEAF SHREDDER KIT MODEL NO. 59157 (Optional)

Ref. No.	Part No.	Description	No. Used
1	47-6260	Bracket	1
2	47-6230	Screen	1
3	46-4880	Mounting Bracket	2
4	32144-11	Screw — Self Tapping	3

Ref. No.	Part No.	Description	No. Used
5	321-3	Capscrew — Hex Hd.	2
6	321-5	Capscrew — Hex Hd.	1
7	3256-1	Washer	1

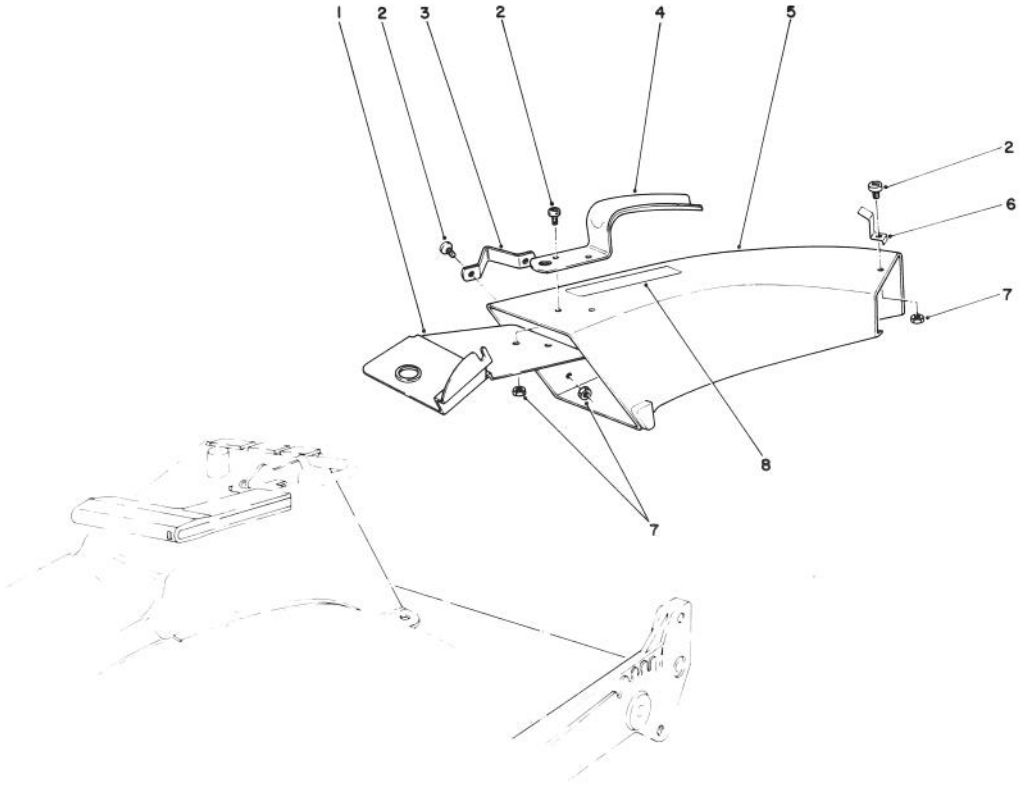

SIDE DISCHARGE CHUTE MODEL NO. 59108 (Optional)

Ref. No.	Part No.	Description	No. Used
1	44-2330	Plate — Discharge Chute	1
2	3251-3	Screw	5
3	46-6580	Bracket — Side	1
4	42-1340	Handle — Grass Chute	1
5	11-7149	Chute — Discharge (Incl. Ref. #8)	1

Ref. No.	Part No.	Description	No. Used
6	49-2630	Clip — Cable Stop	1
7	3296-12	Locknut	5
8	39-9120	Decal — Caution	1

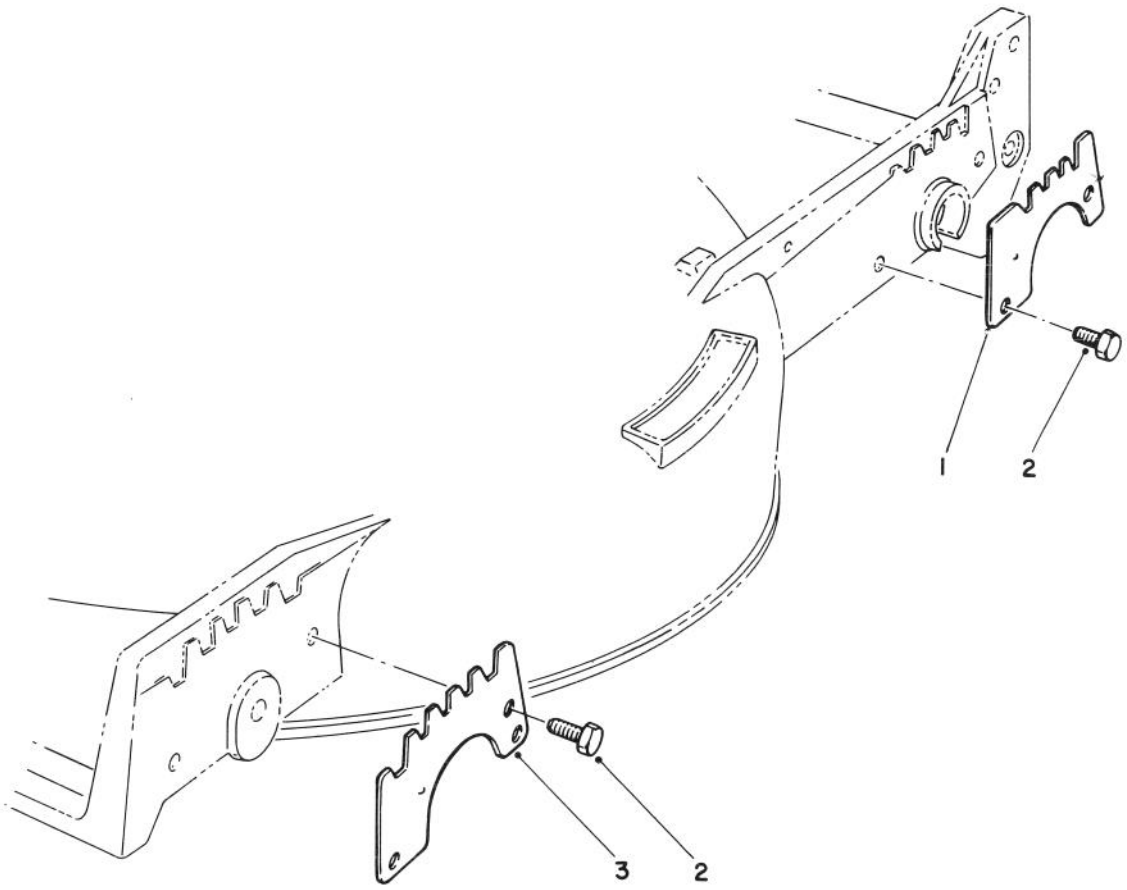

WEAR PLATE KIT NO. 49-4080 (Optional)

Ref. No.	Part No.	Description	No. Used
1	49-4070	Plate — Wear, Rear	2
2	32104-17	Screw — Thread Forming	8

Ref. No.	Part No.	Description	No. Used
3	43-5050	Plate — Wear, Front	2

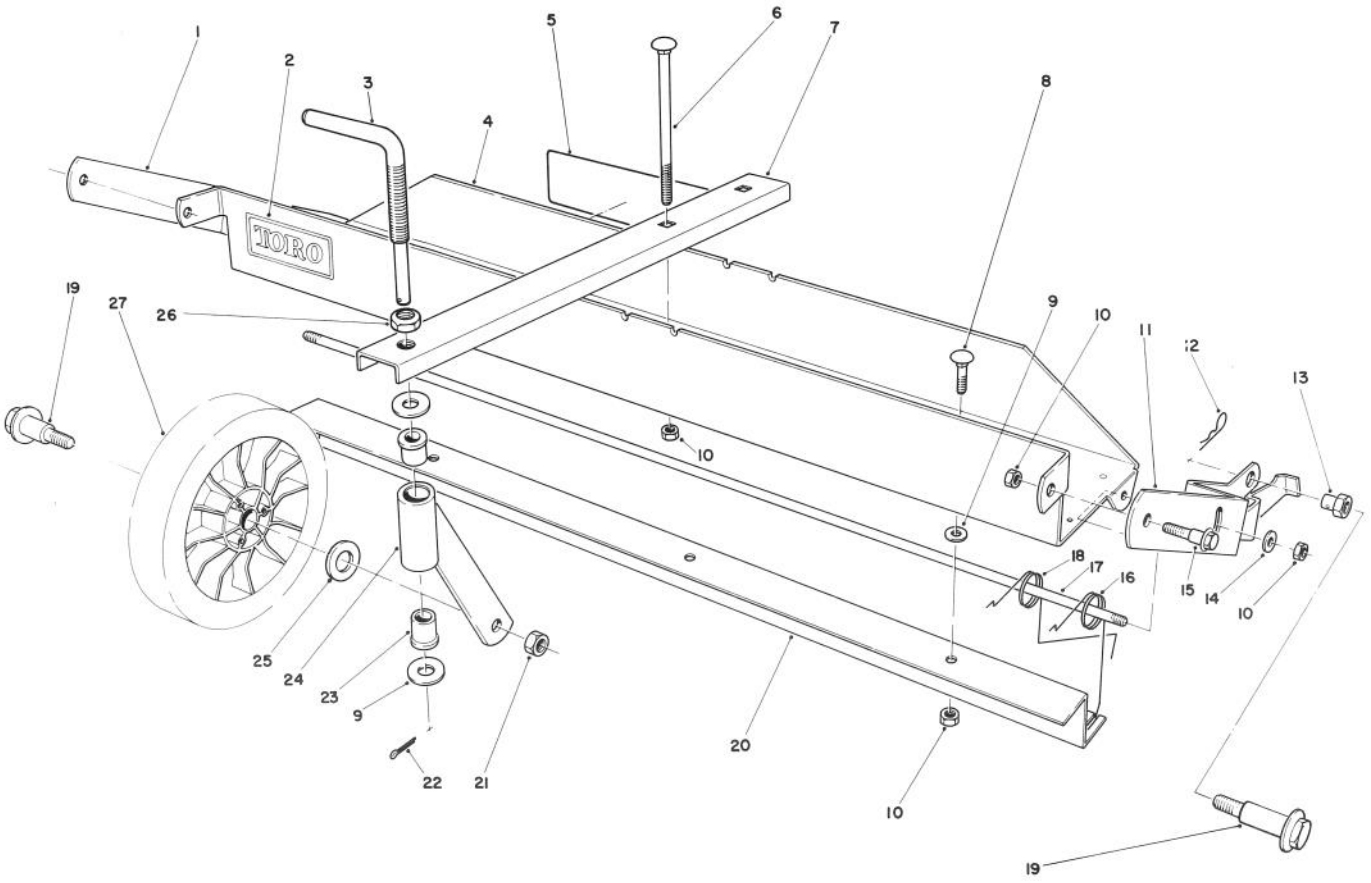

DETHATCHER KIT MODEL NO. 59126 (Optional)

Ref. No.	Part No.	Description	No. Used
1	47-6030	Frame Mount — R.H.	1
2	44-0810	Decal — Toro	1
3	47-6120	Rod — Castor Adjust	1
4	47-2390	Frame — Main (Incl. Ref. #2)	1
5	47-7500	Decal — Instruction	1
6	3230-13	Carriage Bolt	2
7	47-6090	Castor Frame	1
8	3230-1	Carriage Bolt	3
9	3256-23	Washer	5
10	32153-3	Locknut	9
11	47-6020	Frame Mount — L.H.	1
12	3290-255	Hairpin Cotter	2
13	47-6130	Pivot Nut	2
14	3256-24	Washer — Plain	2

Ref. No.	Part No.	Description	No. Used
15	37-8771	Screw — Shoulder	2
16	47-6040	Spring — Dethatcher	6
17	47-6050	Rod — Spring Support	1
18	47-6041	Spring — Dethatcher	6
19	27-6230	Wheel Bolt	3
20	47-6010	Strap — Spring Guide	1
21	3296-6	Locknut	1
22	3272-10	Cotter Pin	1
23	47-6110	Bushing — Flange	2
24	47-6060	Castor Tube & Support	1
25	40-1940	Washer — Wheel	1
26	3220-5	Nut — Jam	1
27	34-0380	Wheel Assembly	1
*	11-5239	Loose Parts	1

* Not Illustrated

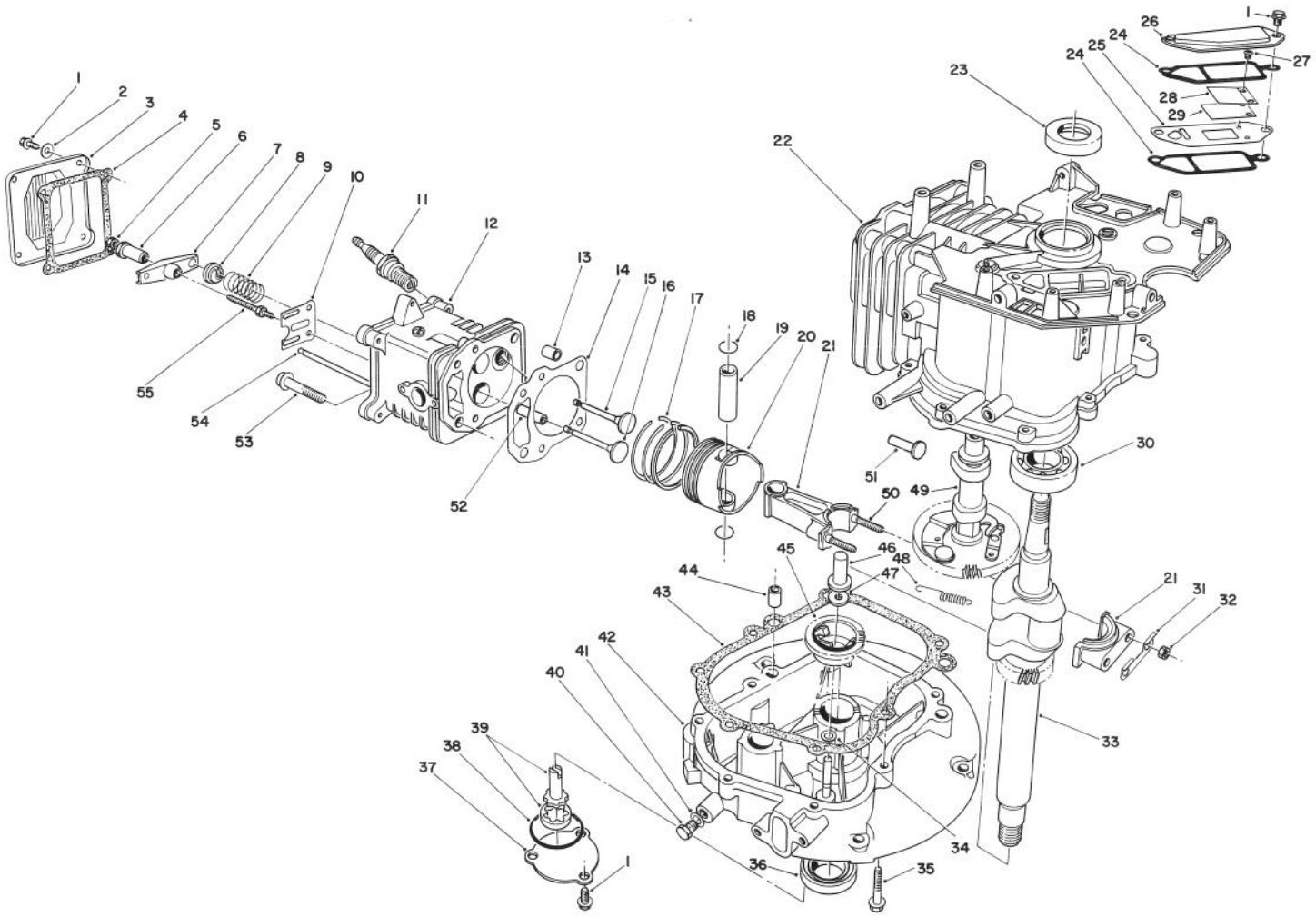

ENGINE ASSEMBLY
(MODEL NO. VMF5 & VMG6)

Ref. No.	Part No.	Description	No. Used
1	81-1170	Bolt	9
2	81-3790	Washer	4
3	81-3780	Cover — Rocker Arm	1
4	81-3770	Gasket — Cover	1
5	81-3760	Jam Nut	2
6	81-3750	Pivot — Rocker Arm	2
7	81-3740	Arm — Rocker	2
8	81-3730	Retainer — Valve Spring	2
9	81-3720	Spring — Valve	2
10	81-3710	Guide — Push Rod	1
11	81-3250	Spark Plug NGKBPR6ES	1
12	81-3700	Head — Cylinder (Incl. Ref. #52)	1
*	81-3840	Cylinder Head Assembly (Incl. Ref. #1-10, 12, & 52-55)	1
13	81-3690	Pin — Dowel	2
14	81-3680	Gasket — Cylinder Head	1
*	81-3820	Gasket Set	A/R
15	81-3670	Valve — Intake	1
16	81-3660	Valve — Exhaust	1
17	81-3650	Ring Set	1
18	50-0960	Circlip	2

Ref. No.	Part No.	Description	No. Used
19	81-3630	Pin — Piston	1
20	81-3620	Piston	1
21	81-3390	Connecting Rod Assembly (Incl. Ref. #31, 32, & 50)	1
22	81-3280	Block — Engine (Incl. Ref. #23, & 30)	1
23	81-3290	Seal — Upper — Crankshaft	1
24	81-3300	Gasket — Breather	2
25		Plate — Breather	1
26	81-3320	Cover — Breather	1
27		Screw — Reed Valve	2
28		Retainer — Reed Valve	1
29		Valve — Reed	1
*	81-3370	Reed Valve Assembly (Incl. Ref. #25, & 27-29)	1
30	81-3380	Ball Bearing	1
31	81-3400	Plate — Lock	1
32	50-0510	Nut	2
33	81-3430	Crankshaft	1
34	81-3440	Washer	1
35	81-3450	Bolt	7
36	81-3460	Seal — Lower Crankshaft	1

* Not Illustrated

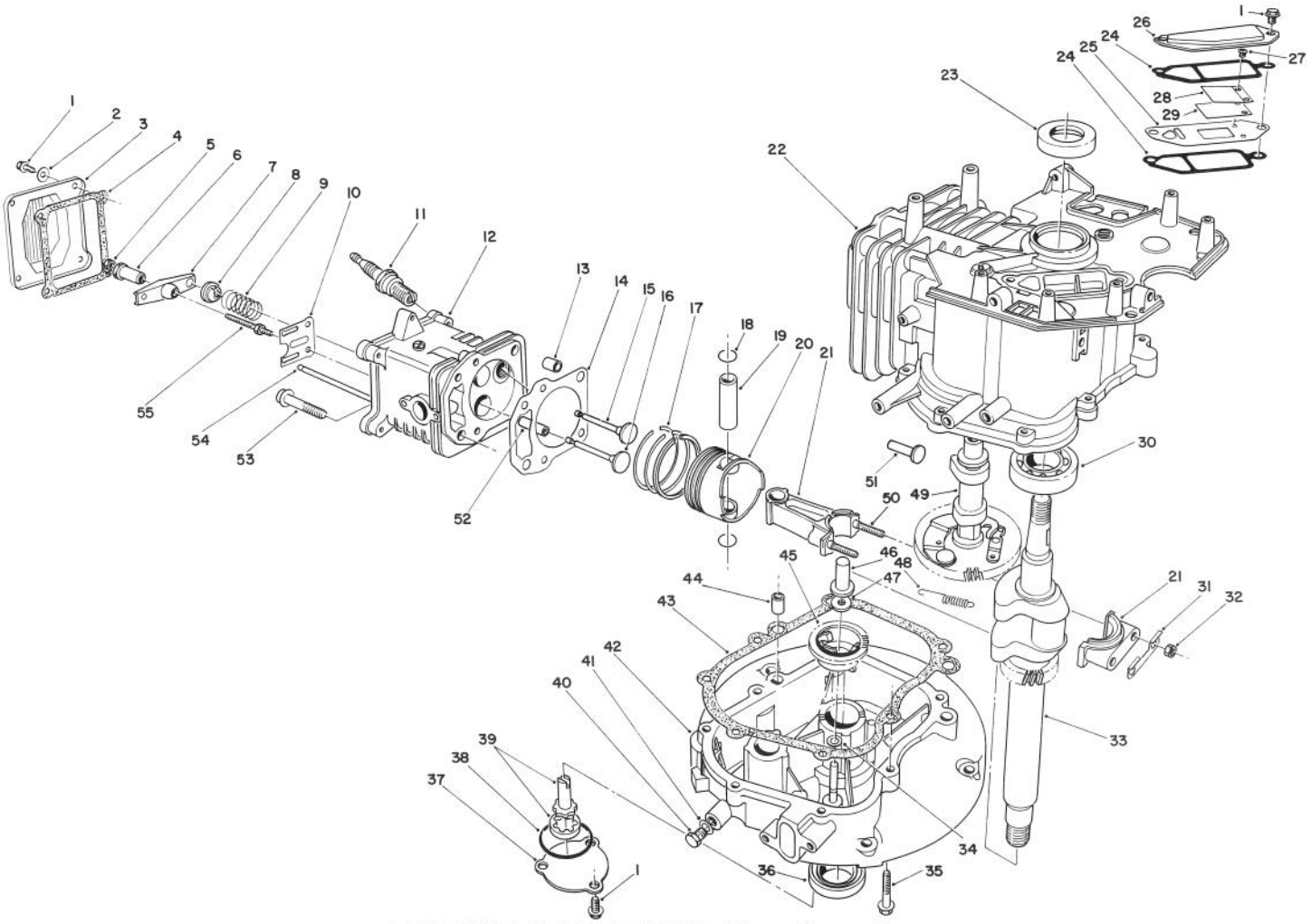

ENGINE ASSEMBLY (Continued)
(MODEL NO. VMF5 & VMG6)

Ref. No.	Part No.	Description	No. Used
37	81-3470	Cover — Oil Pump	1
38	81-3480	O-Ring	1
39	81-3490	Oil Pump Assembly	1
40	81-3500	Plug — Oil Drain	1
41	81-3510	Gasket — Oil Plug	1
42	81-3520	Crankcase — Lower	1
43	81-3530	Gasket — Crankcase	1
44	50-0450	Pin — Dowel	2
45	81-3550	Governor Flyweight Assembly	1
46	81-3560	Plunger — Governor	1
47	81-3570	Washer	1

Ref. No.	Part No.	Description	No. Used
48	81-3580	Spring — Compression Release	1
49	81-3590	Camshaft Assembly (Incl. Ref. #48)	1
50	81-3610	Stud — Connecting Rod	2
51	81-3600	Tappet	2
52	81-3830	Guide — Valve	2
53	50-0190	Bolt	4
54	81-3810	Rod — Push	2
55	81-3800	Stud — Rocker Arm	2
*	12-2619	Short Block Assembly	1

* Not Illustrated

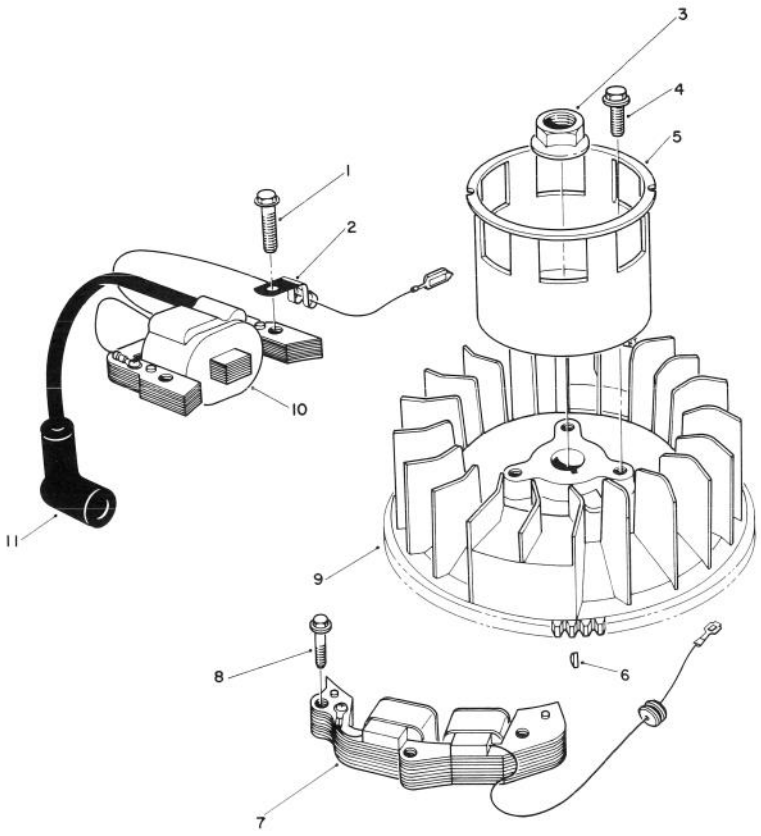

MAGNETO & FLYWHEEL ASSEMBLY (MODEL NO. VMF5 & VMG6)

Ref. No.	Part No.	Description	No. Used
1	53-0860	Bolt	2
2	81-1480	Clamp	1
3	81-3890	Nut	1
4	81-1300	Bolt	3
5	81-3910	Cup — Starter	1
6	81-3930	Key — Flywheel	1

Ref. No.	Part No.	Description	No. Used
7	81-3940	Coil — Alternator	1
8	81-3950	Bolt	2
9	81-3920	Flywheel	1
10	81-3850	Coil Assembly — Magneto	1
11	81-3860	Cover — Spark Plug	1

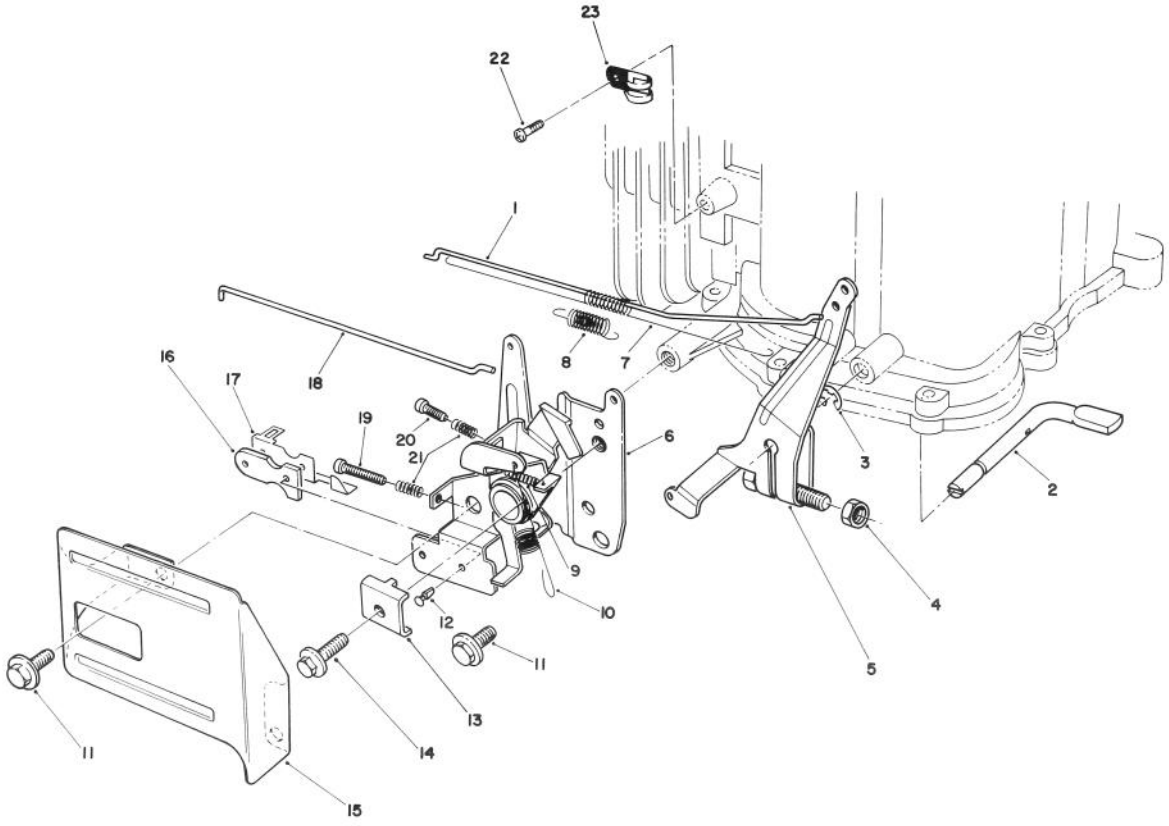

GOVERNOR ASSEMBLY
(MODEL NO. VMF5 & VMG6)

Ref. No.	Part No.	Description	No. Used
1	81-4450	Rod — Carburetor	1
2	81-4480	Shaft — Governor	1
3	81-4540	E-Ring	1
4	81-3760	Nut	1
5	81-4500	Governor Arm Assembly	1
6	81-4510	Throttle & Choke Control	1
7	81-4470	Spring — Carburetor Rod	1
8	81-4460	Spring — Choke Lever	1
9	81-4570	Spring	1
10	81-4520	Spring — Governor	1
11	81-1170	Bolt	2
12	81-4530	Rivet	2
13	81-1690	Clamp — Cable	1

Ref. No.	Part No.	Description	No. Used
14	50-0130	Bolt	1
15	57-5750	Guard — Throttle	1
16	81-1830	Insulator — Kill Switch	1
17	81-1840	Terminal — Switch	1
18	81-4440	Rod — Choke	1
19	81-4560	Screw	1
20	81-4550	Screw	1
21	81-2900	Spring	2
22	81-0380	Screw (Used on Model VMG6 only)	1
23	81-4780	Clamp (Used on Model VMG6 only)	1

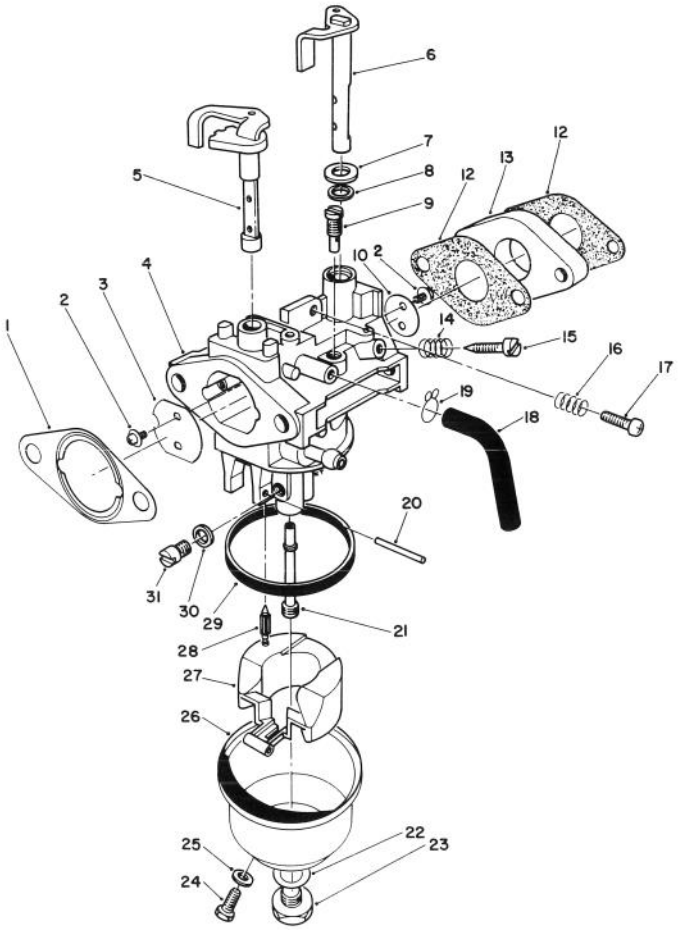

CARBURETOR ASSEMBLY (MODEL NO. VMF5)

Ref. No.	Part No.	Description	No. Used
1	81-4250	Gasket — Air Cleaner	1
2	81-2710	Screw — Choke Valve	4
3	81-2720	Valve — Choke	1
4		Body — Carburetor	1
5	81-4270	Shaft — Choke Valve	1
6	81-2920	Shaft — Throttle Valve	1
7	81-4280	Washer	1
8	81-4290	Seal — Throttle Shaft	1
9	81-1030	Jet — Pilot (#40)	1
10	81-2940	Valve — Throttle	1
12	81-2570	Gasket — Carburetor	2
13	81-0460	Block — Insulator	1
14	81-2580	Spring — Pilot Screw	1
15	50-2360	Screw — Pilot	1
16	81-2580	Spring — Idle Stop	1
17	50-0250	Screw — Idle Stop	1
18	81-4310	Tube — Bowl Vent	1
19	81-4300	Clamp	1

Ref. No.	Part No.	Description	No. Used
20	81-0980	Pin — Hinge	1
21	81-4330	Nozzle — Main	1
22	81-2650	Gasket — Bowl Screw	1
23	81-2660	Screw — Bowl	1
24	81-2670	Screw — Drain	1
25	81-2680	Gasket — Drain Screw	1
26	81-4340	Bowl — Float	1
27	81-2620	Float	1
28	81-2690	Needle	1
29	81-2630	Gasket — Float Bowl	1
30	81-4350	Spacer	1
31	50-4760	Main Jet (#82.5)	1
*	81-1040	Main Jet (#80 High Alt.)	A/R
*	81-4360	Carburetor Kit (Incl. Ref. #1, 12, 22, 25, 28, & 29)	A/R
*	81-4370	Carburetor Assembly (Incl. Ref. #2-31)	1

* Not Illustrated

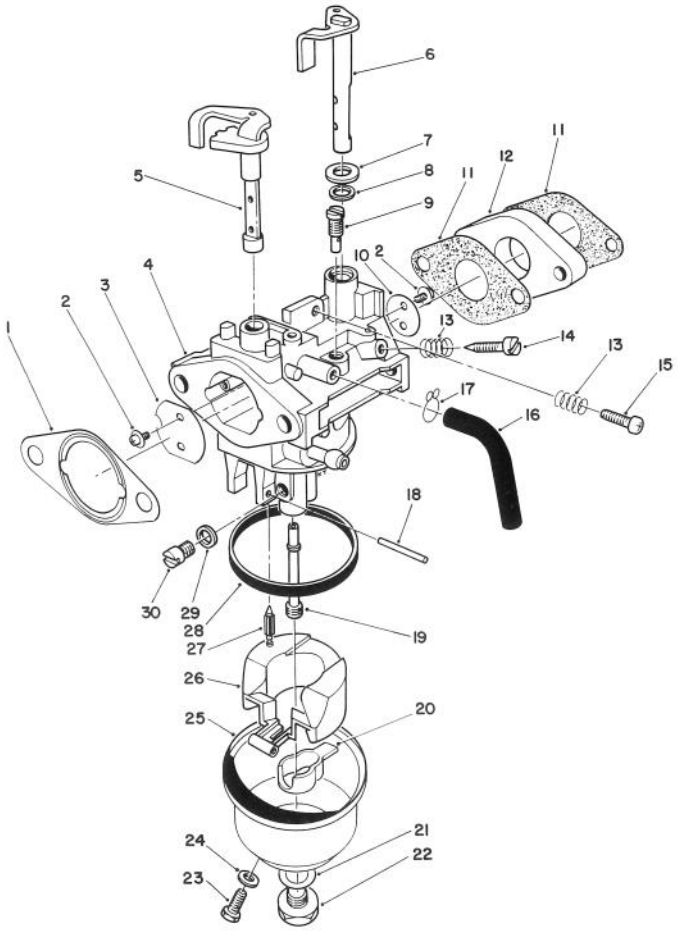

CARBURETOR ASSEMBLY (MODEL NO. VMG6)

Ref. No.	Part No.	Description	No. Used
1	81-4250	Gasket — Air Cleaner	1
2	81-2710	Screw — Choke Valve	4
3	81-2720	Valve — Choke	1
4		Body — Carburetor	1
5	81-4270	Shaft — Choke Valve	1
6	81-2920	Shaft — Throttle Valve	1
7	81-4280	Washer	1
8	81-4290	Seal — Throttle Shaft	1
9	81-1030	Jet — Pilot (#40)	1
10	81-2940	Valve — Throttle	1
11	81-2570	Gasket — Carburetor	2
12	81-0460	Block — Insulator	1
13	81-2580	Spring	2
14	50-2360	Screw — Pilot	1
15	50-0250	Screw — Idle Stop	1
16	81-4310	Tube — Bowl Vent	1
17	81-4300	Clamp	1
18	81-0980	Pin — Hinge	1

Ref. No.	Part No.	Description	No. Used
19	81-4330	Nozzle — Main	1
20	81-4940	Spacer — Float	1
21	81-2650	Gasket — Bowl Screw	1
22	81-2660	Screw — Bowl	1
23	81-2670	Screw — Drain	1
24	81-2680	Gasket — Drain Screw	1
25	81-4340	Bowl — Float	1
26	81-2620	Float	1
27	81-4700	Needle	1
28	81-2630	Gasket — Float Bowl	1
29	81-4350	Spacer	1
30	50-4760	Main Jet (#82.5)	1
*	81-1040	Main Jet (#80 High Alt.)	A/R
*	81-4890	Carburetor Kit (Incl. Ref. #1, 11, 21, 24, 27, & 28)	A/R
*	81-4750	Carburetor Assembly (Incl. Ref. #2-30)	1

* Not Illustrated

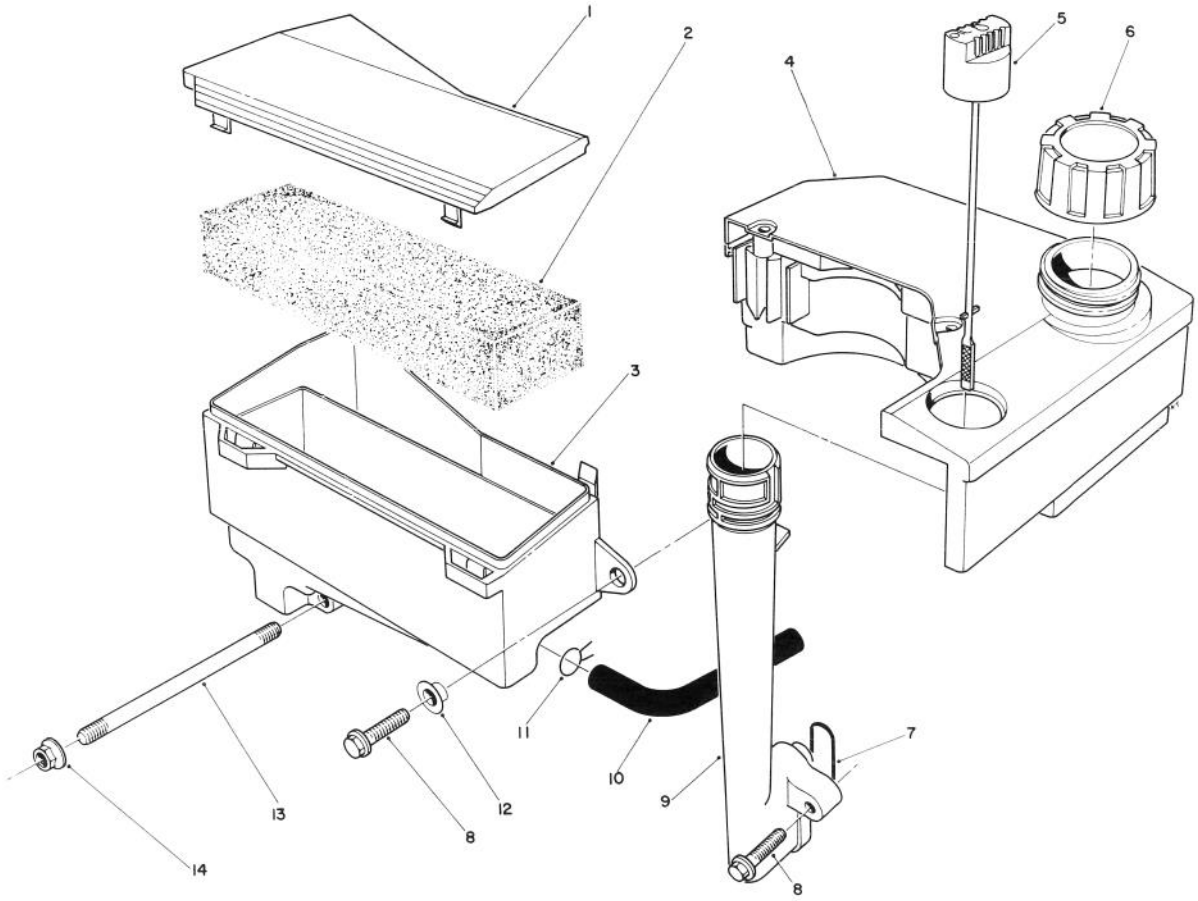

AIR CLEANER & FUEL TANK ASSEMBLY (MODEL NO. VMF5 & VMG6)

Ref. No.	Part No.	Description	No. Used
1	81-4110	Cover — Air Cleaner	1
2	81-4120	Filter — Foam	1
3		Body — Air Cleaner	1
4	55-3530	Fuel Tank	1
5	81-4140	Dipstick — Oil	1
6	55-3570	Gas Cap	1
7	81-4150	O-Ring — Oil Tube	1
8	81-4160	Bolt	3
9	81-4170	Tube — Oil Fill	1

Ref. No.	Part No.	Description	No. Used
10	81-4180	Hose — Crankcase Breather	1
11	81-4190	Clamp	1
12	81-4200	Spacer	1
13	81-4220	Stud — Carburetor	2
14	50-7180	Nut	2
*	81-4240	Air Cleaner Assembly (Incl. Ref. #1 & 3)	1
*	12-3369	Air Cleaner Assembly (Incl. Ref. #1-3, & 10 & 11)	1

* Not Illustrated

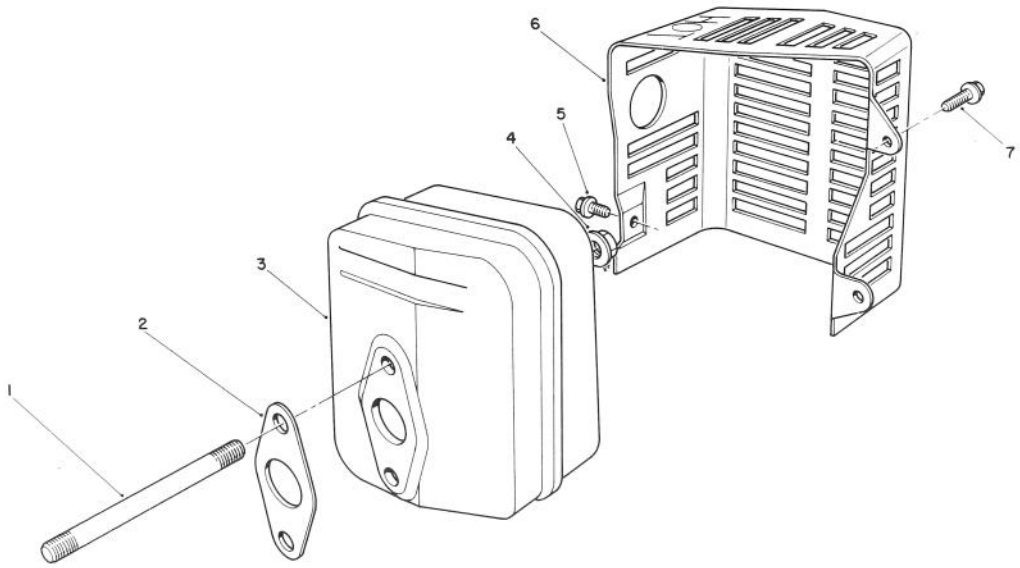

MUFFLER ASSEMBLY
(MODEL NO. VMF5 & VMG6)

Ref. No.	Part No.	Description	No. Used
1	81-4380	Stud — Muffler	2
2	81-4390	Gasket — Muffler	1
3	81-4400	Muffler	1
4	50-0530	Nut	2

Ref. No.	Part No.	Description	No. Used
5	81-4420	Screw	1
6	81-4430	Cover — Muffler	1
7	81-1170	Bolt	2

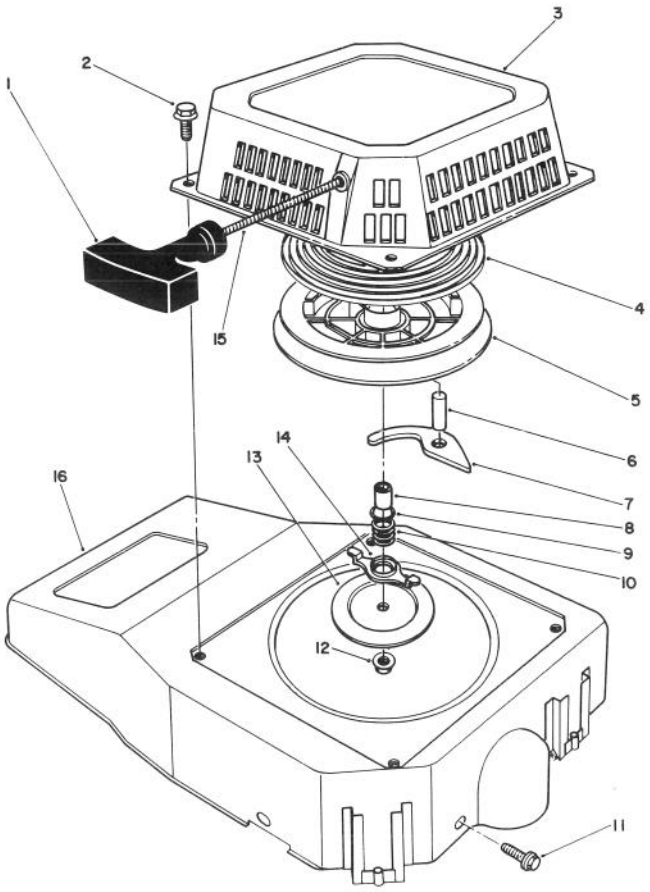

RECOIL ASSEMBLY
(MODEL NO. VMF5 & VMG6)

Ref. No.	Part No.	Description	No. Used
1	81-4000	Handle	1
2	81-1280	Bolt	4
3	81-3970	Case — Recoil	1
4	81-4010	Spring — Recoil	1
5	81-4020	Reel — Rope Pulley	1
6	81-4030	Pin	1
7	81-4040	Pawl	1
8	81-4050	Spacer	1
9	81-4060	Washer	1
10	81-4070	Spring — Friction	1
11	81-1170	Bolt	3
12	81-4100	Locknut	1
13	81-4090	Plate — Friction	1
14	81-4080	Guide — Pawl	1
15	81-1270	Rope — Recoil	1
16	81-3960	Shroud — Blower	1
*	81-3270	Recoil Starter Assembly (Incl. Ref. #1, & 3-15)	1

* Not Illustrated

PRODUCT CHANGES

In an effort to make improvements available to TORO owners as quickly as possible, minor changes are incorporated into Toro's products from time to time that do not become immediately shown in the Parts Catalog. If such a change apparently has been made in your unit, which is not reflected in your manual, see your TORO Distributor or his Authorized TORO Service Dealer for information and part numbers.

IDENTIFICATION AND ORDERING

MODEL AND SERIAL NUMBERS

The Mower has two identification numbers: a model number and a serial number. The two numbers are stamped on a decal which is located on the mower housing between the rear wheels. In any correspondence concerning the mower, supply model and serial numbers to assure that correct information and replacement parts are obtained.

To order replacement parts from an Authorized TORO Service Dealer, supply the following information:

1. Model and serial numbers of the mower.
2. Part number, description, and quantity of part(s) desired.

Note: Do not order by reference number if a parts catalog is being used; use the PART NUMBER.

The Toro Promise

A Two Year Limited Warranty

On All

Gasoline Powered Consumer Products

The Toro Company promises to repair your TORO Product if defective in materials or workmanship. The following time periods from the date of purchase apply:

Residential Product ..... 2 Years
Residential Products Used Commercially ..... 45 Days

The costs of parts and labor are included, but the customer pays the transportation costs. Just return any residential product to an Authorized TORO Service Dealer or TORO Distributor.

Should you feel your TORO Product is defective and wish to rely on The Toro Promise, the following procedure is recommended:

1. Contact any Authorized TORO Service Dealer, TORO Master Service Dealer, or TORO Distributor (the Yellow Pages of your telephone directory is a good reference source).
2. He will either instruct you to return the product to him or recommend another Authorized TORO Service outlet which might be more convenient.
3. Bring the product along with your original sales slip, or other evidence of purchase date, to the service dealer.
4. The servicing dealer will inspect the unit, advise you whether the product is defective and, if so, make all repairs necessary to correct the defect without extra charge to you.

If for any reason you are dissatisfied with the dealer's analysis of the defect or the service performed, you may contact us.

Write:

TORO Consumer Service Department
8111 Lyndale Avenue South
Minneapolis, Minnesota 55420

The above remedy of product defects through repair by an Authorized TORO Service Dealer is the purchaser's sole remedy for any defect.

THERE IS NO OTHER EXPRESS WARRANTY. ALL IMPLIED WARRANTIES OF MERCHANTABILITY AND FITNESS FOR USE ARE LIMITED TO THE DURATION OF THE EXPRESS WARRANTY.

Some states do not allow limitations on how long an implied warranty lasts, so the above limitation may not apply to you.

This warranty applies only to parts or components which are defective and does not cover repairs necessary due to normal wear, misuse, accidents, or lack of proper maintenance. Regular, routine maintenance of the unit to keep it in proper operating condition is the responsibility of the owner.

All warranty repairs reimbursable under The Toro Promise must be performed by an Authorized TORO Service Dealer using Toro approved replacement parts.

Repairs or attempted repairs by anyone other than an Authorized TORO Service Account are not reimbursable under The Toro Promise. In addition, these unauthorized repair attempts may result in additional malfunctions, the correction of which is not covered by warranty.

THE TORO COMPANY IS NOT LIABLE FOR INDIRECT, INCIDENTAL OR CONSEQUENTIAL DAMAGES IN CONNECTION WITH THE USE OF THE PRODUCT INCLUDING ANY COST OR EXPENSE OF PROVIDING SUBSTITUTE EQUIPMENT OR SERVICE DURING PERIODS OF MALFUNCTION OR NON-USE.

Some states do not allow the exclusion or limitation of incidental or consequential damages, so the above limitation or exclusion may not apply to you.

This warranty gives you specific legal rights, and you may also have other rights which vary from state to state.

COUNTRIES OTHER THAN THE UNITED STATES OR CANADA

Customers who have purchased TORO products exported from the United States or Canada should contact their TORO Distributor (Dealer) to obtain guarantee policies for your country, province or state. If for any reason you are dissatisfied with your Distributor's service or have difficulty obtaining guarantee information, contact the TORO importer. If all other remedies fail, you may contact us at The Toro Company.

Compliance with Radio Interference Regulations Certified.
Certifie Conforme au Reglement sur le Brouillage Radioelectrique.

MAINTENANCE RECORD

Date	Hours Used	Oil Change	Air Cleaner Service	Lubrication	Winter Storage	Spring Service	Spark Plug Gap