FORM NO. 3313-162

TORO®

MODEL NO. 20584-7000001 & UP

PARTS CATALOG

21" H.P. REAR BAGGER

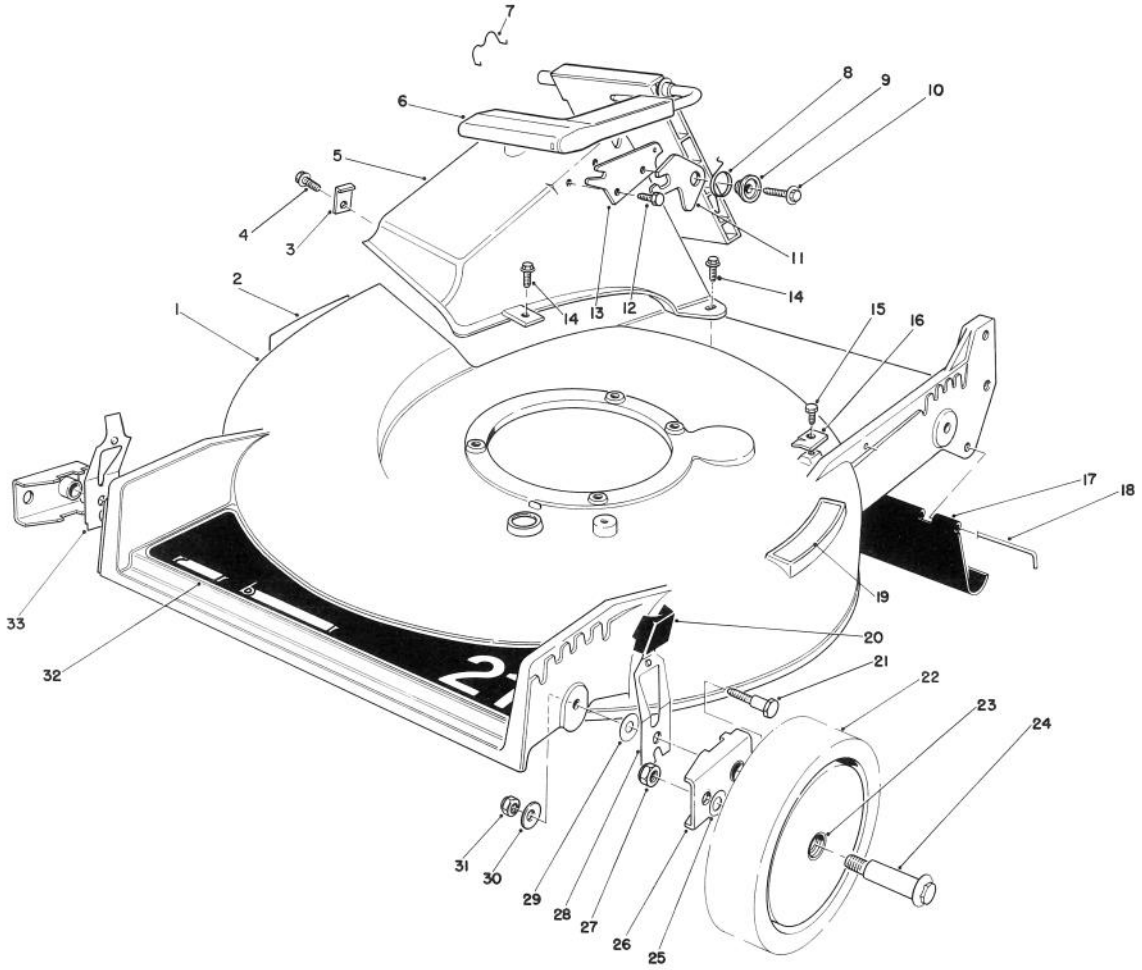

HOUSING ASSEMBLY

Ref. No.	Part No.	Description	No. Used
1	11-4079	Housing — 21" (Incl. Ref. #2 & 19)	1
2	43-8480	Decal — Danger	1
3	47-6540	Clip — Tunnel	1
4	12-3270	Screw — Self Tapping	1
5	46-3500	Tunnel — Discharge	1
6	51-0200	Discharge Door Assembly	1
7	47-5840	Retainer — Door	1
8	33-4860	Spring — Torsion	1
9	43-4840	Spacer — Latch	1
10	46-8091	Screw — Self Tapping, Hex Washer Hd.	1
11	42-4010	Latch — Safety	1

Ref. No.	Part No.	Description	No. Used
12	46-8090	Screw — Self Tapping, Hex Washer Hd.	1
13	23-1040	Plate — Latch	1
14	46-6811	Screw & Washer Assembly	3
15	32144-11	Screw — Self Tapping, Hex Washer Hd.	1
16	62-3720	Clamp — Cable	1
17	44-0580	Shield — Rear	1
18	33-3208	Rod — Shield	1
19	46-7370	Decal — Step Pad	1
20	25-7740	Knob — Arm	4
21	44-5270	Screw — Pivot	4
22	11-9509	Wheel & Tire Assembly (Incl. Ref. #23)	4

© The Toro Company — 1987

PRICE $1.00

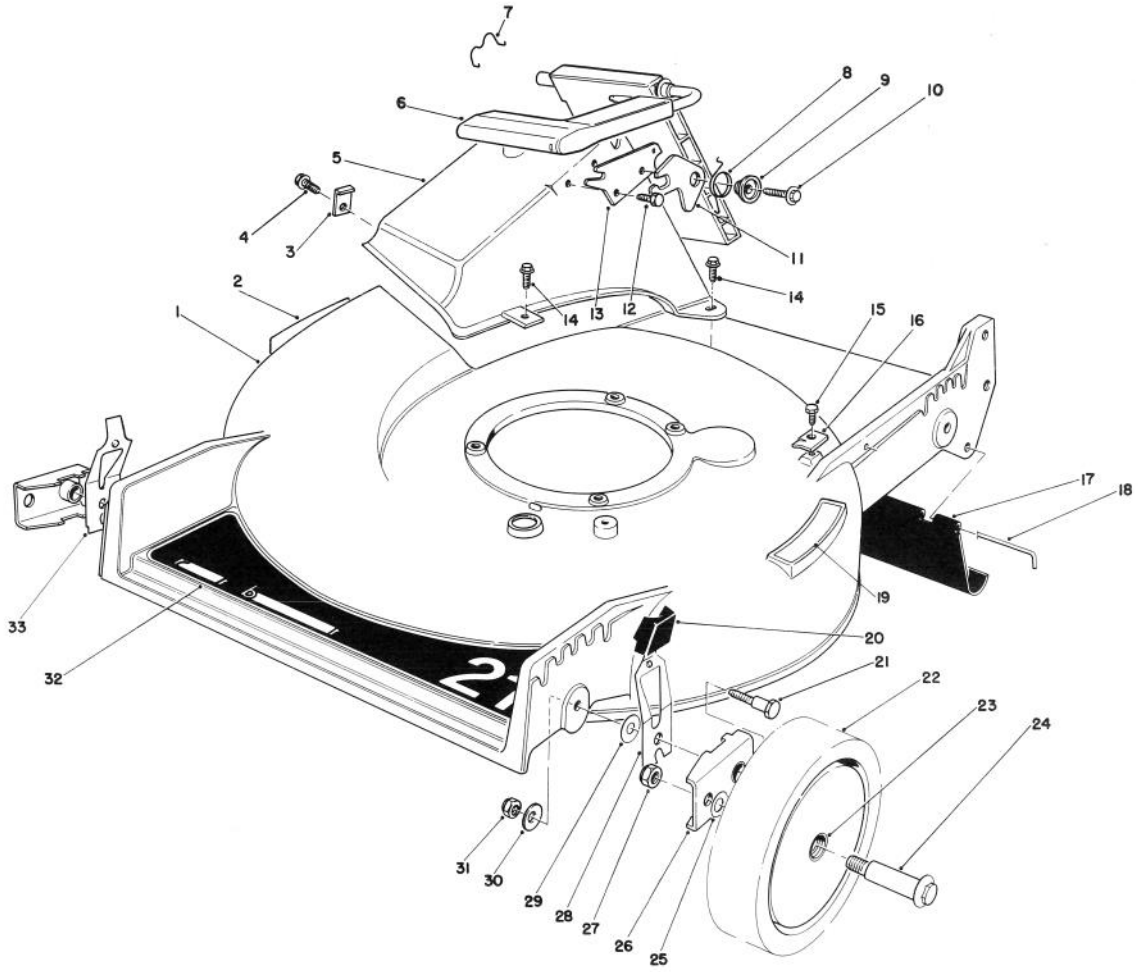

HOUSING ASSEMBLY

Ref. No.	Part No.	Description	No. Used
23	27-6250	Bushing — Wheel	8
24	27-6230	Bolt — Wheel	4
25	40-1940	Washer — Wheel	4
26	47-2940	Pivot Arm Assembly	4
27	52-3620	Locknut	4
28	52-7480	Spring Arm Assembly L.H.	2

Ref. No.	Part No.	Description	No. Used
29	5-4460	Washer — Pivot	4
30	3290-456	Washer — Belleville	4
31	3296-29	Locknut	4
32	44-0450	Decal — 21" Rear Bagger	1
33	52-7490	Spring Arm Assembly R.H.	1

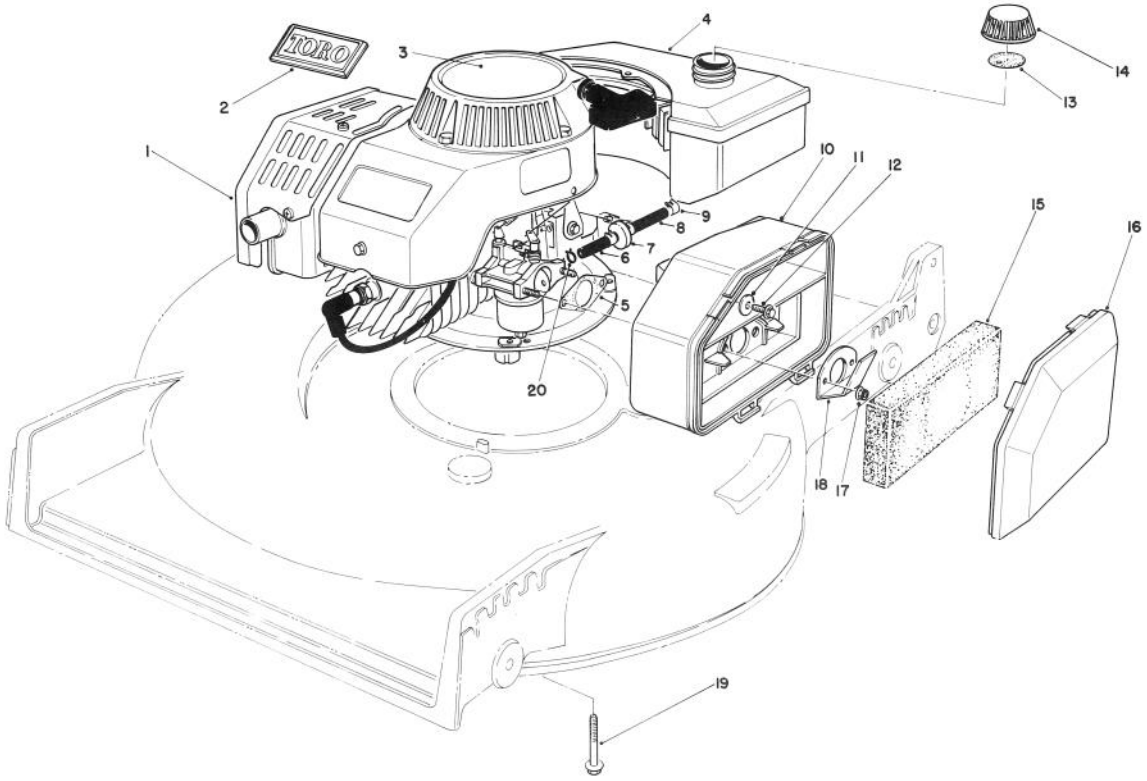

ENGINE ASSEMBLY
(MODEL NO. 47PF5)
(Used on units with Serial No. 7000101-7002011)

Ref. No.	Part No.	Description	No. Used
1	51-0401	Engine	1
2	46-8290	Plate — Logo, Toro	1
3	57-9870	Decal — Recoil	1
4	81-0041	Fuel Tank Assembly	1
5	81-0090	Gasket — Air Cleaner	1
6	51-3215	Line — Fuel	1
7	56-6360	Filter — Fuel	1
8	51-3216	Line — Fuel	1
9	2412-95	Clamp — Fuel Line	3
10	81-0110	Air Cleaner	1
11	3256-16	Washer — Flat	1

Ref. No.	Part No.	Description	No. Used
12	51-2690	Screw — Hex Washer Hd.	1
13	20-4620	Gasket — Gas Cap	1
14	42-0681	Gas Cap Assembly (Incl. Ref. #13)	1
15	81-0100	Foam Element — Air Cleaner	1
16	81-0120	Cover — Air Cleaner	1
17	49-7810	Locknut	2
18	81-0140	Deflector — Spitback	1
19	3234-11	Screw — Hex Flange Hd.	4
20	2412-80	Clamp — Fuel Line	1

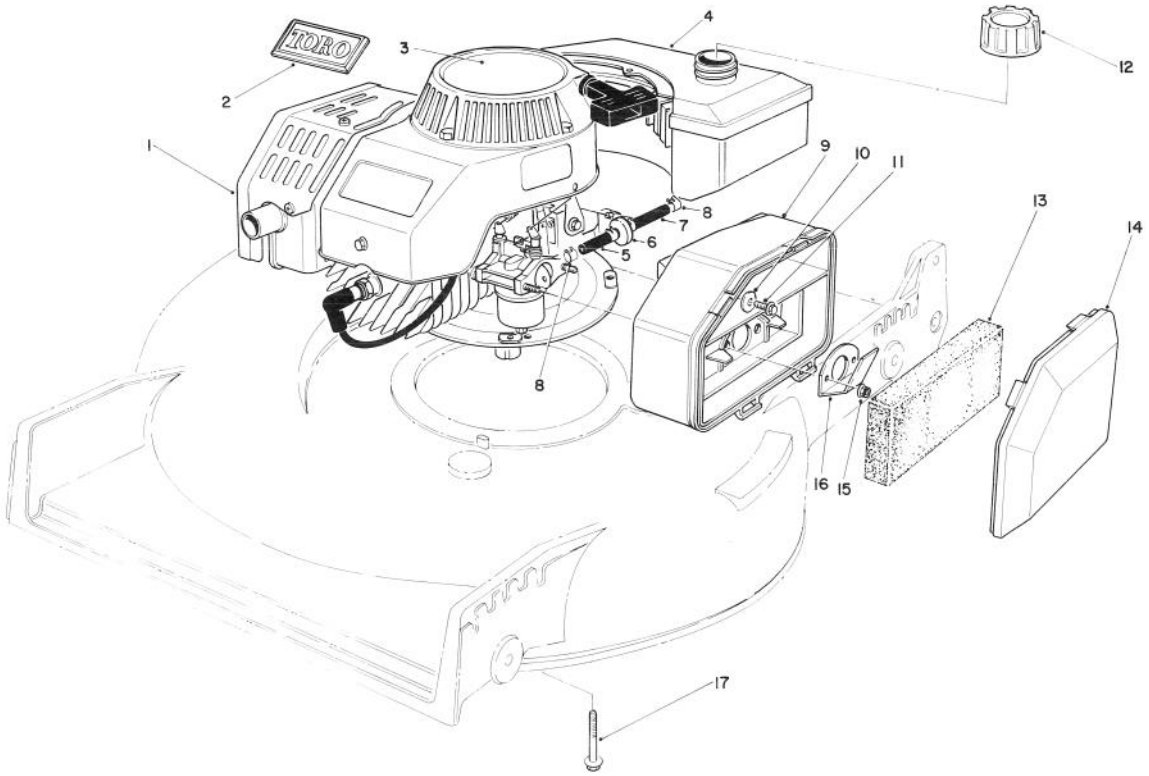

ENGINE ASSEMBLY
(MODEL NO. 47PG6)
(Used on units with Serial No. 7002012 & up)

Ref. No.	Part No.	Description	No. Used
1		Engine	1
2	46-8290	Plate — Logo, Toro	1
3	57-9870	Decal — Recoil	1
4	81-0042	Fuel Tank Assembly	1
5	51-3216	Line — Fuel	1
6	56-6360	Filter — Fuel	1
7	51-3215	Line — Fuel	1
8	2412-95	Clamp — Fuel Line	4
9	81-0110	Air Cleaner	1

Ref. No.	Part No.	Description	No. Used
10	3256-16	Washer — Flat	1
11	51-2690	Screw — Hex Washer Hd.	1
12	55-3575	Gas Cap	1
13	81-0100	Foam Element — Air Cleaner	1
14	81-0120	Cover — Air Cleaner	1
15	49-7810	Locknut	2
16	81-0140	Deflector — Spitback	1
17	3234-11	Screw — Hex Flange Hd.	4

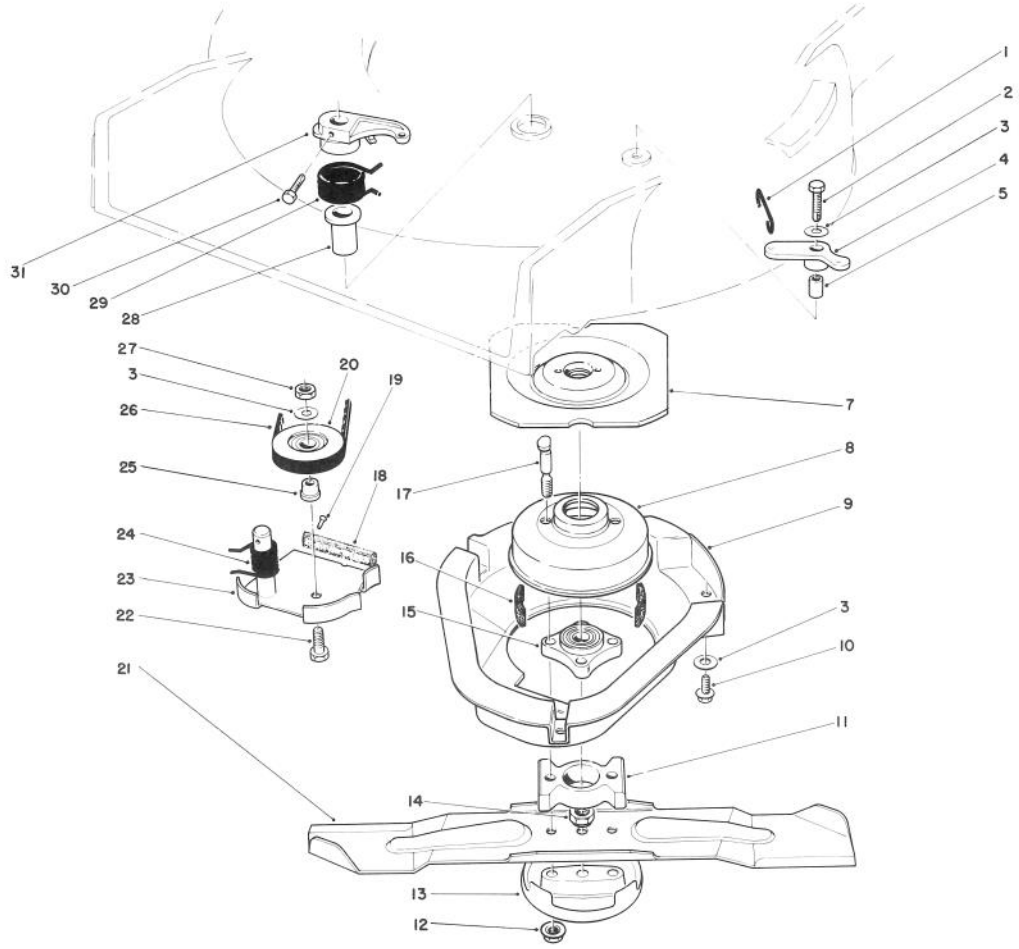

BLADE BRAKE CLUTCH ASSEMBLY

Ref. No.	Part No.	Description	No. Used
1	49-2810	Link — Control	1
2	32104-107	Screw — Self Tapping Hex Hd.	1
3	3256-23	Washer — Plain	5
4	49-7960	Bell Crank	1
5	49-7950	Sleeve — Bell Crank	1
7	56-6160	Flywheel	1
8	56-6170	Drum — Brake	1
9	46-5691	Shield	1
10	32144-11	Screw — Thread Forming Hex Washer Hd.	3
11	42-6760	Spacer — Blade	1
12	54-9190	Nut — Lock	2
13	42-0910	Cup — Anti Scalp	1
14	3296-33	Nut — Lock	1
15	42-6890	Hub Assembly	1
16	52-3480	Dampener — Vibration	2

Ref. No.	Part No.	Description	No. Used
17	42-3190	Bolt — Blade	2
18		Pad — Brake	1
19	3295-23	Rivet — Semi Tubular	2
20	46-5650	Pulley Idler	1
21	42-1000	Blade 21"	1
22	322-16	Capscrew	1
23	49-7920	Brake Plate (Incl. Ref. #18 & 19)	1
24	46-5670	Spring — Torsion Lower	1
25	46-5630	Hub — Idler Pulley	1
26	42-0884	V-Belt	1
27	3296-47	Nut — Lock	1
28	46-6680	Bushing — Flanged	1
29	49-7970	Spring — Torsion Upper	1
30	32104-96	Screw — Self Tapping Hex Hd.	1
31	49-2820	Lever	1

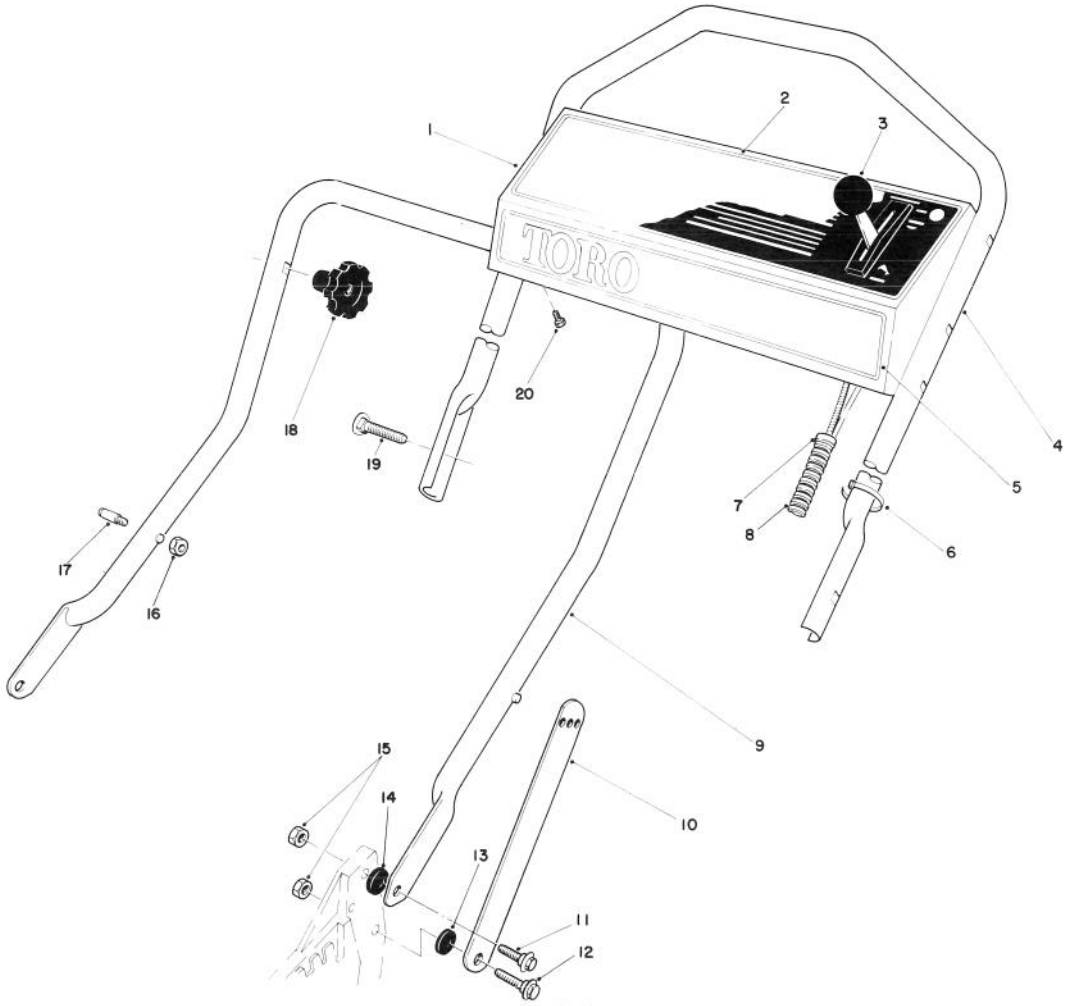

HANDLE ASSEMBLY
(Used on units with Serial No. 7000101-7002011)

Ref. No.	Part No.	Description	No. Used
1	11-6779	Panel — Control (Incl. Ref. #2)	1
2	49-3070	Decal — Instruction Panel	1
3	46-6010	Control — Throttle (Bend Type #2) (Sheath Lg. 54¼ inch) (Wire Lg. 2½ inch)	1
4	46-5411	Handle — Upper	1
5	46-7380	Decal — Toro Panel	1
6	3290-278	Cable Tie	1
7	2412-50	Clip — Convoluted Tubing	4
8	46-6442	Cover — Control Cables	1
9	43-1361	Lower Handle Assembly	1

Ref. No.	Part No.	Description	No. Used
10	43-1370	Latch — Handle	2
11	27-7211	Screw — Shoulder	2
12	27-7210	Screw — Shoulder	2
13	3-3287	Spacer — Handle Latch	2
14	55-8060	Spacer	2
15	3296-29	Nut — Lock	4
16†	3296-47	Nut — Lock	2
17†	49-2750	Pin — Handle	2
18	19-4050	Knob — Handle Release	2
19	17-9421	Screw — Handle	2
20	32104-76	Screw — Self Tapping Slotted	4

†Service Replacement Parts.

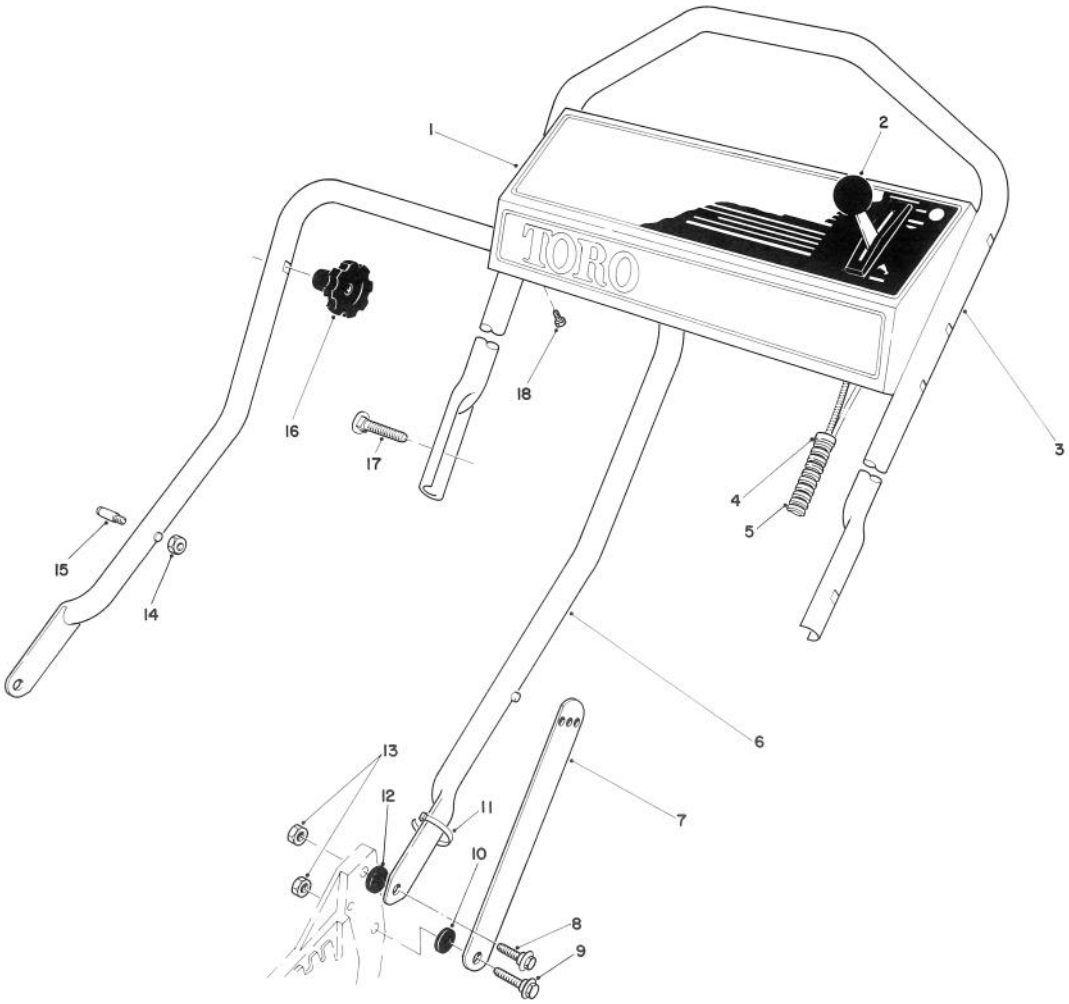

HANDLE ASSEMBLY
(Used on units with Serial No. 7002012 & up)

Ref. No.	Part No.	Description	No. Used
1	61-4290	Panel — Control	1
2	46-6010	Control — Throttle (Bend Type #2) (Sheath Lg. 54¼ inch) Wire Lg. 2½ inch)	1
3	46-5411	Handle — Upper	1
4	2412-50	Clip — Convoluted Tubing	4
5	46-6442	Cover — Control Cables	1
6	43-1361	Lower Handle Assembly	1
7	43-1370	Latch — Handle	2
8	27-7211	Screw — Shoulder	2

Ref. No.	Part No.	Description	No. Used
9	27-7210	Screw — Shoulder	2
10	3-3287	Spacer — Handle Latch	2
11	3290-378	Cable Tie	1
12	55-8060	Spacer	2
13	3296-29	Nut — Lock	4
14†	3296-47	Nut — Lock	2
15†	49-2750	Pin — Handle	2
16	19-4050	Knob — Handle Release	2
17	17-9421	Screw — Handle	2
18	32104-76	Screw — Self Tapping Slotted	4

†Service Replacement Parts.

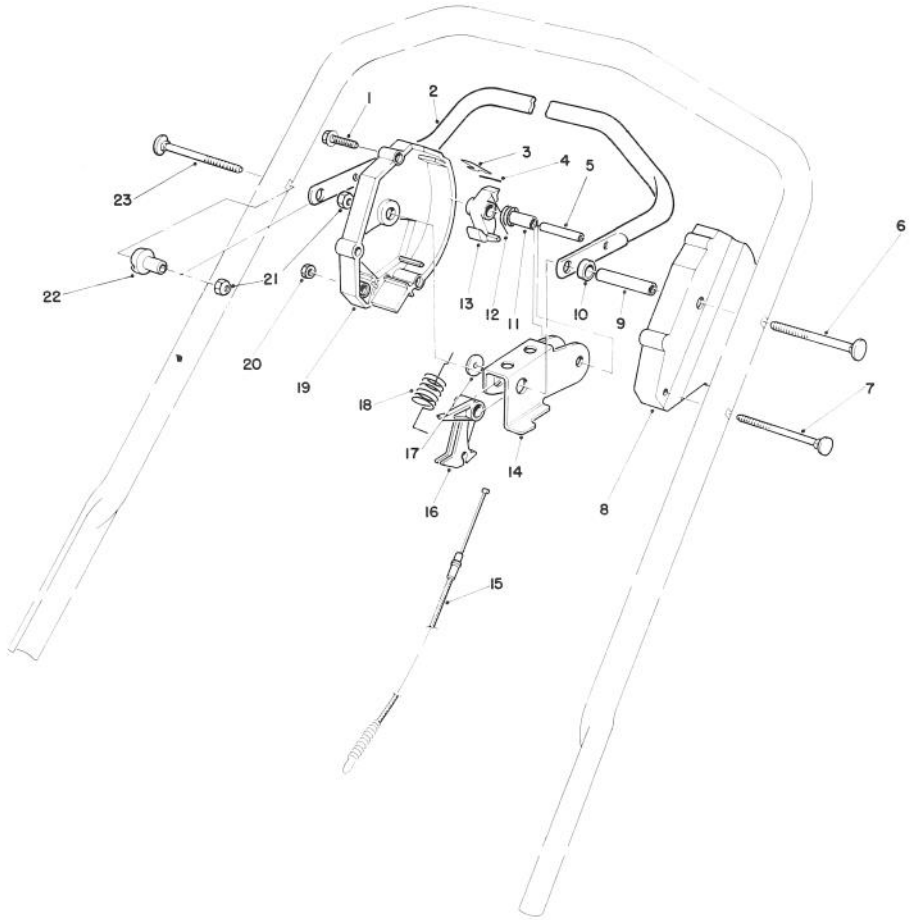

CONTROL ASSEMBLY

Ref. No.	Part No.	Description	No. Used
1	46-7040	Screw — Thread Forming Hex Washer Hd.	3
2	52-7430	Control Bar Assembly	1
3	52-7410	Spring — Leaf	1
4	57-6290	Pin — Insert	1
5	32121-9	Pin — Roll	1
6	17-9422	Screw — Handle	1
7	46-6431	Screw — Handle	1
8	46-5460	Housing — Control L.H.	1
9	46-5590	Spacer	1
10	256-276	Spacer	1
11	46-5550	Bushing — P.M.	1
12	46-5510	Spring — Torsion	1

Ref. No.	Part No.	Description	No. Used
13	46-5530	Hook — Control	1
14	62-3710	Rocker	1
15	62-3770	Cable — Clutch	1
16	46-5540	Lever — Cable	1
17	46-5600	Washer — Nylon	1
18	49-8020	Spring — Detent	1
19	12-3429	Housing — Control R.H. (Incl. Ref. #3 & 4)	1
20	3296-48	Locknut	1
21	3296-58	Locknut	2
22	49-1630	Support — Spacer	1
23	17-9421	Screw — Handle	1

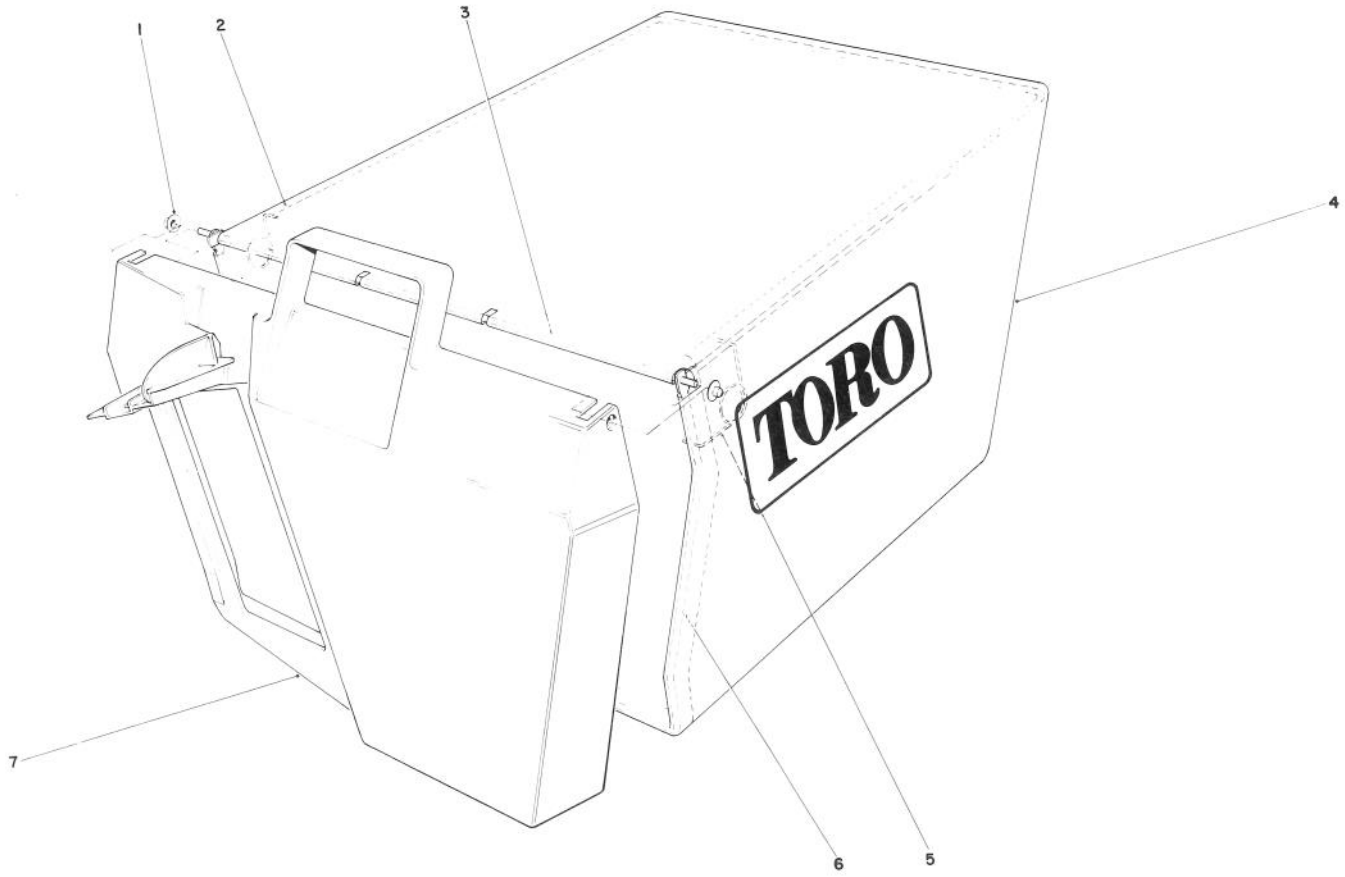

GRASS BAG ASSEMBLY NO. 11-0159

Ref. No.	Part No.	Description	No. Used
1	3290-422	Push Nut	2
2	42-4030	Bag Frame Upper	1
3	33-4820	Hinge Bag Door	1
4	8-2759	Grass Bag	1

Ref. No.	Part No.	Description	No. Used
5	36-6910	Spring	2
6	43-0030	Frame Bag	1
7	36-1331	Door Grass Bag	1

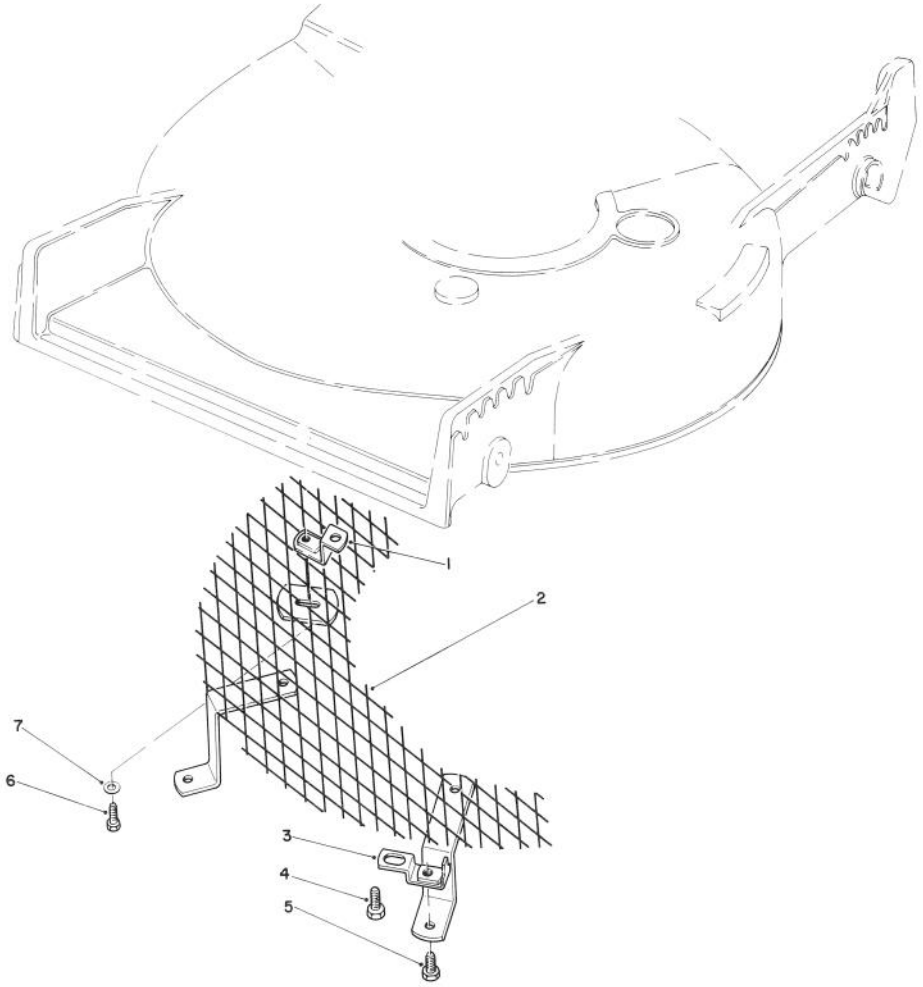

LEAF SHREDDER KIT MODEL NO. 59157 (Optional)

Ref. No.	Part No.	Description	No. Used
1	47-6260	Bracket	1
2	47-6230	Screen	1
3	46-4880	Mounting Bracket	2
4	32144-11	Screw — Self Tapping	3

Ref. No.	Part No.	Description	Ref. No.
5	321-3	Capscrew, Hex Hd.	2
6	321-5	Capscrew, Hex Hd.	1
7	3256-1	Washer	1

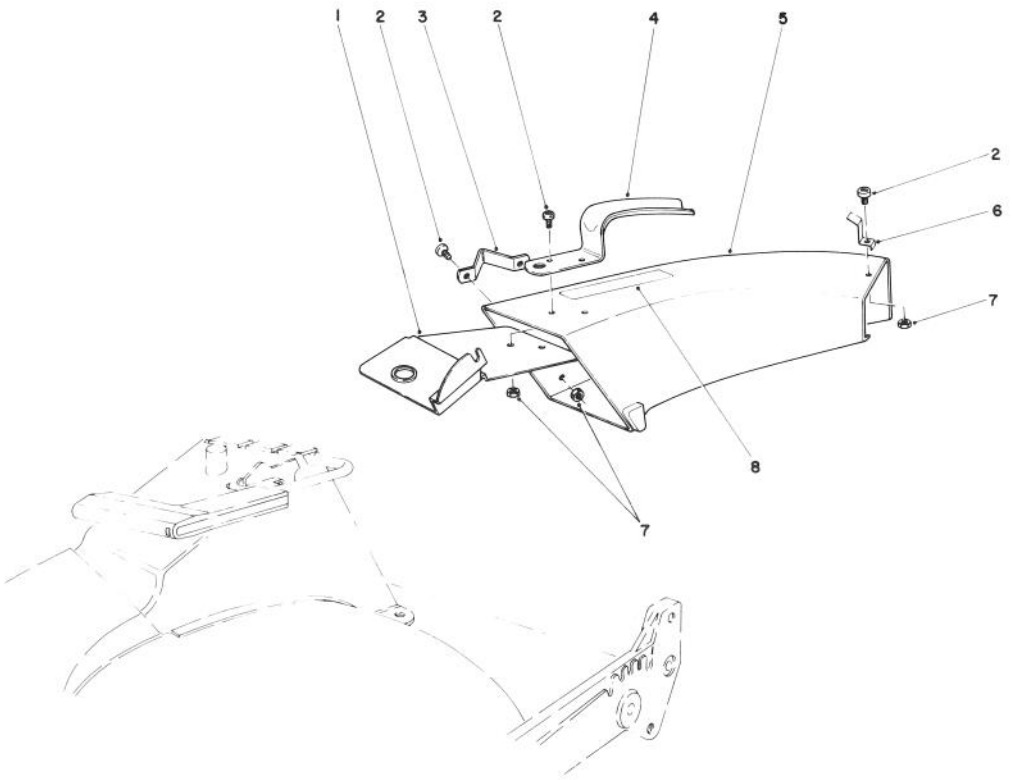

SIDE DISCHARGE CHUTE MODEL NO. 59108 (Optional)

Ref. No.	Part No.	Description	No. Used
1	44-2330	Plate — Discharge Chute	1
2	3251-3	Screw	5
3	46-6580	Bracket — Side	1
4	42-1340	Handle — Grass Chute	1
5	11-7149	Chute — Discharge (Incl. Ref. #8)	1

Ref. No.	Part No.	Description	No. Used
6	49-2630	Clip — Cable Stop	1
7	3296-12	Locknut	5
8	39-9120	Decal — Caution	1

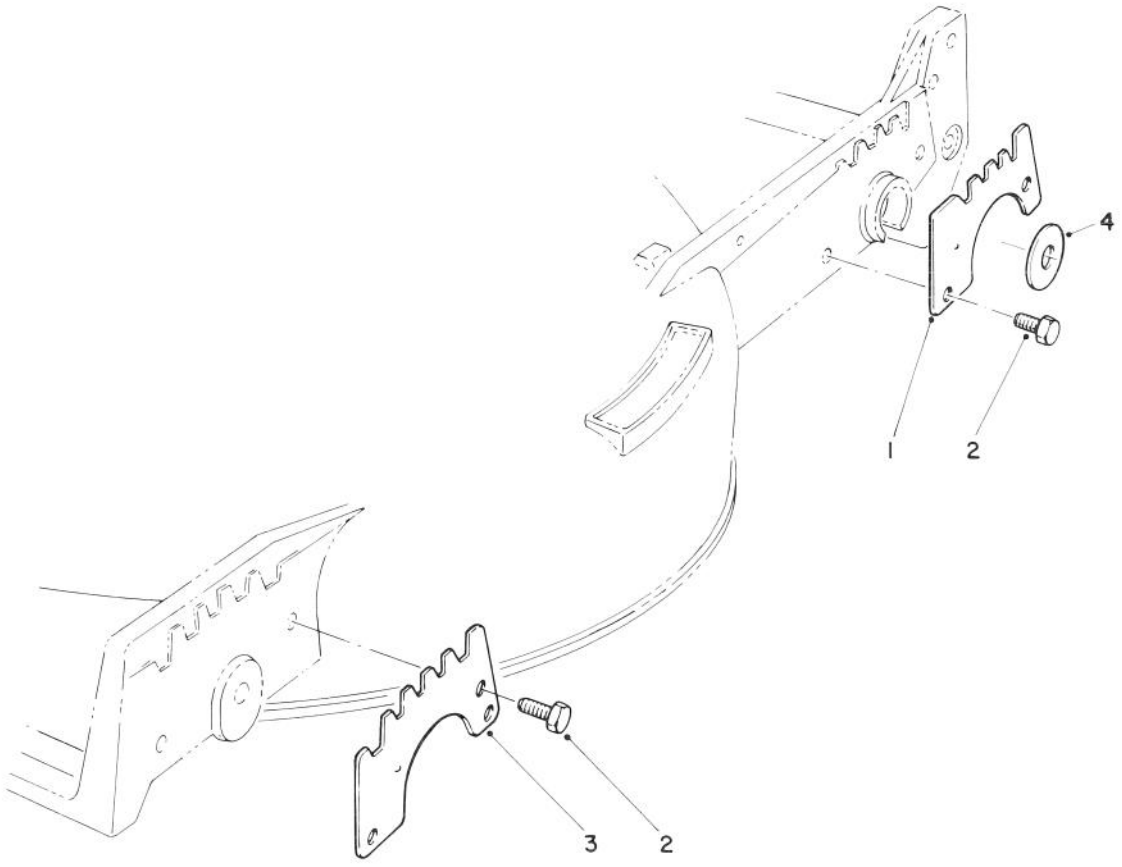

WEAR PLATE KIT NO. 49-4080 (Optional)

Ref. No.	Part No.	Description	No. Used
1	49-4070	Plate — Wear, Rear	2
2	32104-17	Screw — Thread Forming	8

Ref. No.	Part No.	Description	No. Used
3	43-5050	Plate — Wear, Front	2
4	33-0390	Washer	2

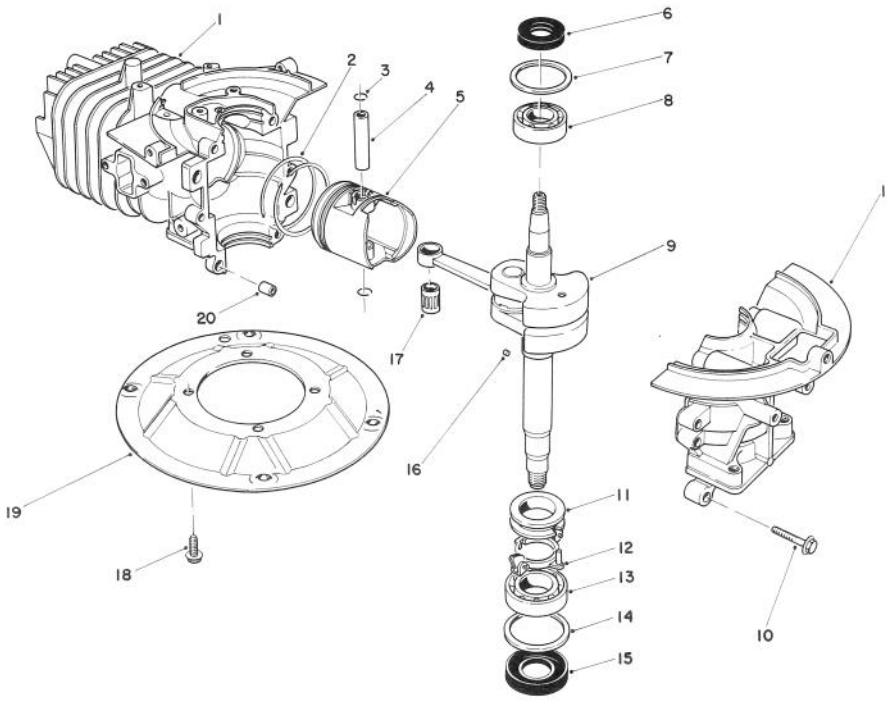

CRANKSHAFT ASSEMBLY
(ENGINE MODEL NO. 47PF5 & 47PG6)

Ref. No.	Part No.	Description	No. Used
1	81-2800	Crankcase/Cylinder Assy.	1
2	81-0590	Ring Set	1
3	81-0620	Circlip	2
4	81-0600	Wrist Pin	1
5	81-0580	Piston — 58 mm	1
6	81-0720	Oil Seal — Upper	1
7	81-0710	Thrust Washer — Upper	1
8	81-0690	Bearing — Upper — 20 mm	1
9	81-4670	Crankshaft/Connecting Rod Assembly	1
10	81-0540	Bolt (30 mm Lg)	6

Ref. No.	Part No.	Description	No. Used
11	81-0770	Collar — Governor	1
12	81-0750	Bracket — Governor Flyweight	1
13	81-0700	Bearing — Lower — 25 mm	1
14	81-0730	Thrust Washer — Lower	1
15	81-0740	Oil Seal — Lower	1
16	81-0760	Pin — Governor	1
17	81-0610	Bearing — Wrist Pin	1
18	81-0570	Bolt	4
19	81-0560	Plate — Mounting	1
20	81-0520	Pin — Crankcase Dowel	2
*	12-5509	Short Block Assembly	1

*Not Illustrated

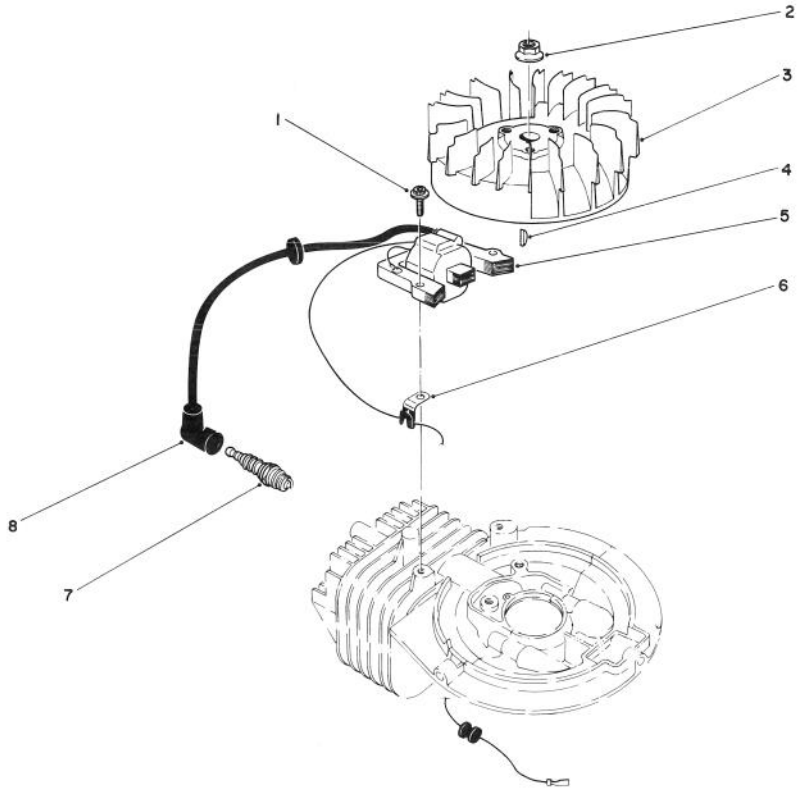

FLYWHEEL & MAGNETO ASSEMBLY (ENGINE MODEL NO. 47PF5 & 47PG6)

Ref. No.	Part No.	Description	No. Used
1	81-2050	Capscrew — Allenhead	2
2	81-1330	Nut	1
3	81-2810	Flywheel — Magneto	1
4	81-2370	Key — Flywheel	1
5	81-2820	Coil/Ignition Assembly	1

Ref. No.	Part No.	Description	No. Used
6	81-1480	Clamp	1
7	81-0181	Spark Plug	1
8	81-1500	Cover — Spark Plug	1
*	41-7650	Puller — Flywheel	1

*Not Illustrated

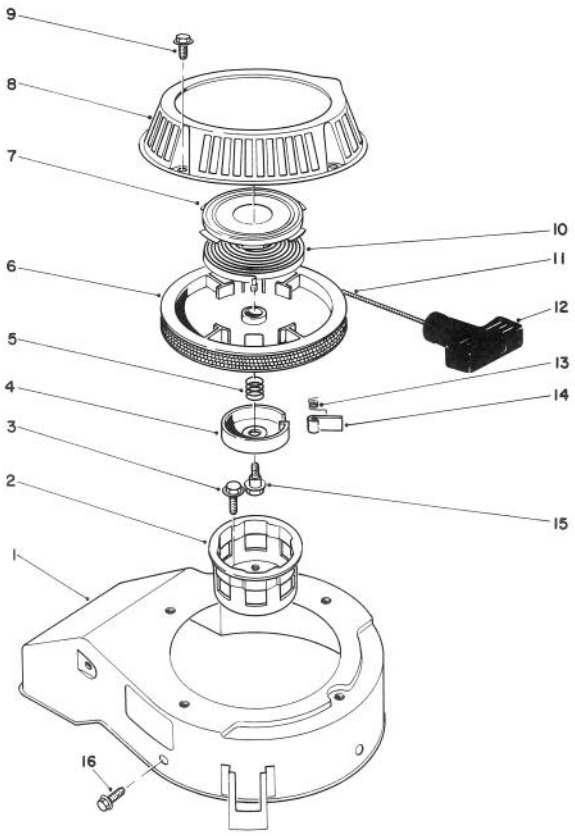

RECOIL ASSEMBLY
(ENGINE MODEL NO. 47PF5 & 47PG6)

Ref. No.	Part No.	Description	No. Used
1	81-2070	Cover — Cooling Fan	1
2	81-1290	Pulley — Starter Cup	1
3	81-1300	Bolt (16 mm Lg.)	3
4	81-1250	Retainer — Dog	1
5	81-1240	Spring — Compression	1
6	81-1210	Reel — Rope Pulley	1
7	81-1640	Retainer Cup — Recoil Spring	1
8	81-2090	Case — Recoil	1
9	81-1280	Bolt	4
10	81-1200	Spring — Recoil	1
11	81-1270	Rope	1
12	81-1630	Handle — Recoil	1
13	81-1220	Spring — Dog	1
14	81-1230	Dog	1
15	81-1260	Bolt — Shoulder	1
16	81-1170	Bolt — Self Tapping (15 mm Lg.)	3
*	81-2040	Starter Assembly (Incl. Ref. #4-15)	1
*	81-2300	Spring and Retainer (Incl. Ref. #7 & 10)	1

*Not Illustrated

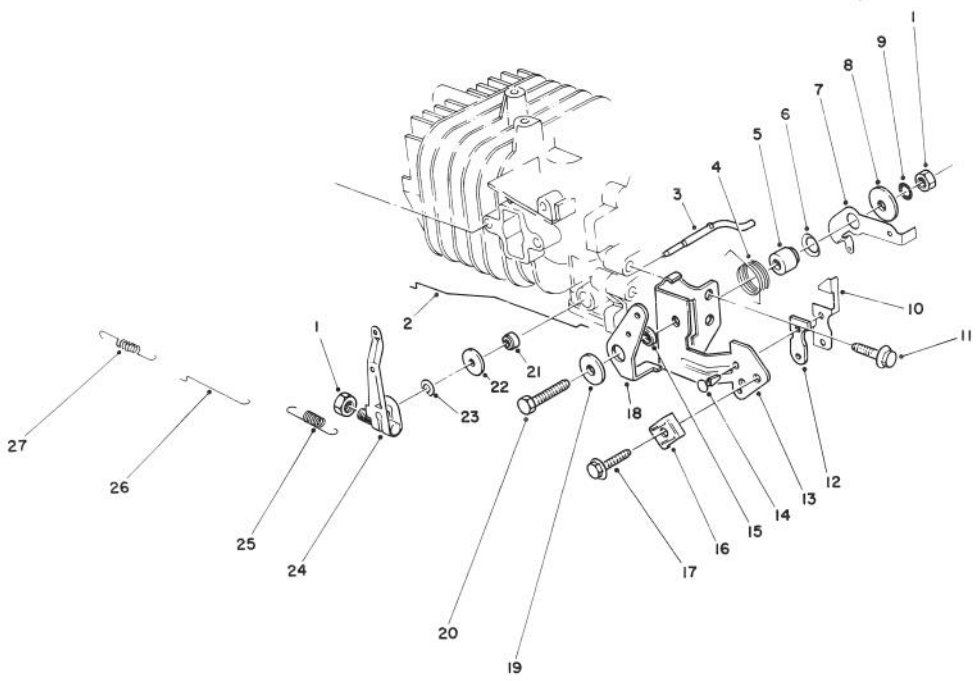

GOVERNOR ASSEMBLY
(ENGINE MODEL NO. 47PF5 & 47PG6)

Ref. No.	Part No.	Description	No. Used
1	81-0900	Nut	2
2	81-1720	Rod — Choke	1
3	81-0840	Shaft — Governor	1
4	81-2460	Spring — Choke Control Lever	1
5	81-1770	Spacer — Governor Spring Lever	1
6	81-1820	Washer — Governor Spring Lever	1
7	81-2850	Lever — Governor Spring	1
8	81-1750	Washer — Governor Control Lever	1
9	81-1450	Washer — Lock	1
10	81-1840	Terminal — Kill Switch	1
11	81-1170	Bolt — Self Tap (15 mm Lg.)	1
12	81-1830	Insulator — Kill Switch	1
13	81-2420	Bracket — Throttle Control	1

Ref. No.	Part No.	Description	No. Used
14	81-1850	Rivet — Kill Switch	2
15	81-2470	Spacer — Choke Control Lever	1
16	81-2430	Clamp — Cable	1
17	50-0130	Bolt — Cable Clamp	1
18	81-1710	Lever — Choke Control	1
19	50-0760	Washer — Choke Control Lever	1
20	81-1730	Bolt — Throttle Control Bracket	1
21	81-0850	Oil Seal — Governor Shaft	1
22	81-0860	Washer	1
23	81-0870	E-Ring	1
24	81-2840	Governor Arm/Bolt Assembly	1
25	81-2830	Spring — Governor	1
26	81-0910	Rod — Carburetor	1
27	81-0920	Spring — Carburetor Rod	1

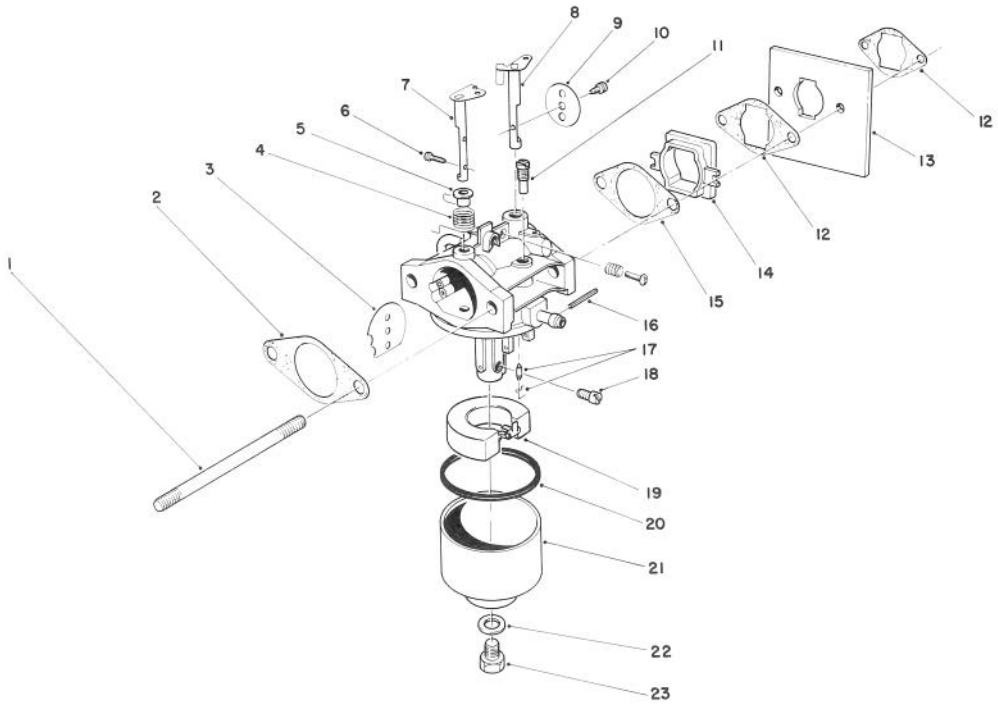

CARBURETOR ASSEMBLY (ENGINE MODEL NO. 47PF5 & 47PG6)

Ref. No.	Part No.	Description	No. Used
1	81-2240	Stud Bolt — Carburetor	2
2	81-0090	Gasket	1
3	81-0240	Valve — Choke (Used on Model 47PF5)	1
3	81-4950	Valve — Choke (Used on Modle 47PG6)	1
4	81-0230	Spring — Choke	1
5	81-0220	Bushing — Choke Valve	1
6	81-2160	Screw — Choke Valve	2
7	81-1950	Shaft — Choke	1
8	81-0250	Shaft — Throttle	1
9	81-0260	Valve — Throttle	1
10	81-0270	Screw — Throttle Valve	1
11	81-1030	Jet — Pilot # (40)	1
12	81-2320	Gasket — Shield	2
13	81-2330	Shield — Carburetor	1
14	81-2190	Insulator — Carburetor	1
15	81-0780	Gasket	1
16	81-0980	Pin — Float	1
17	81-1600	Needle Valve/Wire (Used on Model 47PF5)	1

Ref. No.	Part No.	Description	No. Used
17	81-4910	Needle Valve/Wire (Used on Model 47PG6)	1
18	81-1940	Jet — Main # (76.3)	1
*	81-2340	Jet — Main # (72.5) High Alt., Above 6,000 (Optional)	A/R
19	81-0970	Float	1
20	81-1010	Gasket — Float Bowl	1
21	81-1610	Bowl — Float	1
22	81-1020	Gasket — Bowl Screw	1
23	81-1000	Screw — Bowl	1
*	81-1960	Carburetor Kit (Incl. Ref. #2, 15, 17, 20 & 22) (Used on Model 47PF5)	1
*	12-6379	Carburetor Kit (Incl. Ref. #2, 15, 17, 20 & 22) (Used on Model 47PG6)	1
*	81-1930	Carburetor Assembly Complete (Used on Model 47PF5)	1
*	81-4900	Carburetor Assembly Complete (Used on Model 47PG6)	1

*Not Illustrated

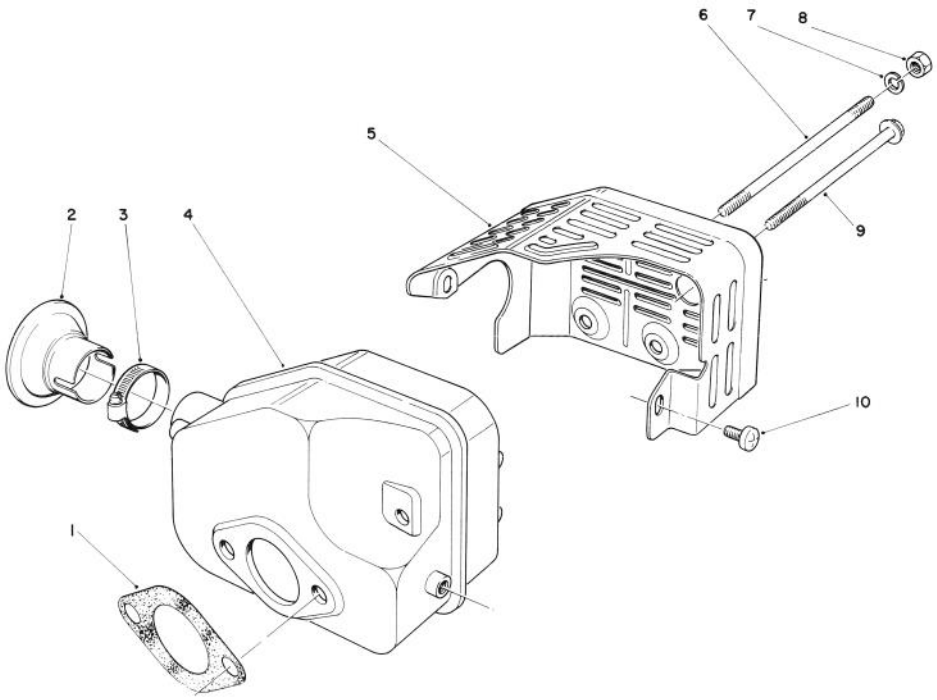

MUFFLER ASSEMBLY
(ENGINE MODEL NO. 47PF5 & 47PG6)

Ref. No.	Part No.	Description	No. Used
1	81-1080	Gasket — Muffler	1
2*	81-0200	Spark Arrester	1
3†		Clamp	1
4	81-1090	Muffler	1
5	81-2450	Cover — Muffler	1

Ref. No.	Part No.	Description	No. Used
6	81-1100	Bolt	2
7	81-1120	Washer — Lock	2
8	81-1110	Nut	2
9	81-1150	Bolt — Self Tapping	1
10	81-1140	Screw — Phillips Hd.	2

*Optional Equipment
†Obtain Locally

PRODUCT CHANGES

In an effort to make improvements available to TORO owners as quickly as possible, minor changes are incorporated into Toro's products from time to time that do not become immediately shown in the Parts Catalog. If such a change apparently has been made in your unit, which is not reflected in your manual, see your TORO Distributor or his Authorized TORO Service Dealer for information and part numbers.

IDENTIFICATION AND ORDERING

MODEL AND SERIAL NUMBERS

The Mower has two identification numbers: a model number and a serial number. The two numbers are stamped on a decal which is located on the mower housing between the rear wheels. In any correspondence concerning the mower, supply model and serial numbers to assure that correct information and replacement parts are obtained.

To order replacement parts from an Authorized TORO Service Dealer, supply the following information:

1. Model and serial number of the mower.
2. Part number, description, and quantity of part(s) desired.

Note: Do not order by reference number if a parts catalog is being used; use the PART NUMBER.

The Toro Promise

A Two Year Limited Warranty
On All Gasoline Powered Consumer Products

The Toro Company promises to repair your TORO Product if defective in materials or workmanship. The following time periods from the date of purchase apply:

Residential Product ..... 2 Years
Residential Products Used Commercially... 45 Days

The costs of parts and labor are included, but the customer pays the transportation costs. Just return any residential product to an Authorized TORO Service Dealer or TORO Distributor.

Should you feel your TORO Product is defective and wish to rely on The Toro Promise, the following procedure is recommended:

1. Contact any Authorized TORO Service Dealer, TORO Master Service Dealer, or TORO Distributor (the Yellow Pages of your telephone directory is a good reference source).
2. He will either instruct you to return the product to him or recommend another Authorized TORO Service outlet which might be more convenient.
3. Bring the product along with your original sales slip, or other evidence of purchase date, to the service dealer.
4. The servicing dealer will inspect the unit, advise you whether the product is defective and, if so, make all repairs necessary to correct the defect without extra charge to you.

If for any reason you are dissatisfied with the dealer's analysis of the defect or the service performed, you may contact us.

Write:

TORO Consumer Service Department
8111 Lyndale Avenue South
Minneapolis, Minnesota 55420

The above remedy of product defects through repair by an Authorized TORO Service Dealer is the purchaser's sole remedy for any defect.

THERE IS NO OTHER EXPRESS WARRANTY. ALL IMPLIED WARRANTIES OF MERCHANTABILITY AND FITNESS FOR USE ARE LIMITED TO THE DURATION OF THE EXPRESS WARRANTY.

Some states do not allow limitations on how long an implied warranty lasts, so the above limitation may not apply to you.

This warranty applies only to parts or components which are defective and does not cover repairs necessary due to normal wear, misuse, accidents, or lack of proper maintenance. Regular, routine maintenance of the unit to keep it in proper operating condition is the responsibility of the owner.

All warranty repairs reimbursable under The Toro Promise must be performed by an Authorized TORO Service Dealer using Toro approved replacement parts.

Repairs or attemped repairs by anyone other than an Authorized TORO Service Account are not reimbursable under The Toro Promise. In addition, these unauthorized repair attempts may result in additional malfunctions, the correction of which is not covered by warranty.

THE TORO COMPANY IS NOT LIABLE FOR INDIRECT, INCIDENTAL OR CONSEQUENTIAL DAMAGES IN CONNECTION WITH THE USE OF THE PRODUCT INCLUDING ANY COST OR EXPENSE OF PROVIDING SUBSTITUTE EQUIPMENT OR SERVICE DURING PERIODS OF MALFUNCTION OR NON-USE.

Some states do not allow the exclusion or limitation of incidental or consequential damages, so the above limitation or exclusion may not apply to you.

This warranty gives you specific legal rights, and you may also have other rights which vary from state to state.

COUNTRIES OTHER THAN THE UNITED STATES OR CANADA

Customers who have purchased TORO products exported from the United States or Canada should contact their TORO Distributor (Dealer) to obtain guarantee policies for your country, province or state. If for any reason you are dissatisfied with your Distributor's service or have difficulty obtaining guarantee information, contact the TORO importer. If all other remedies fail, you may contact us at The Toro Company.

Compliance with Radio Interference Regulations Certified.
Certifie Conforme au Reglement sur le Brouillage Radioelectrique.

MAINTENANCE RECORD

Date	Hours Used	Oil Change	Air Cleaner Service	Lubrication	Winter Storage	Spring Service	Spark Plug Gap