FORM NO. 3313-165

TORO®

MODEL NO. 20695-7000001 & Up

PARTS CATALOG

21″ S.P. REAR BAGGER

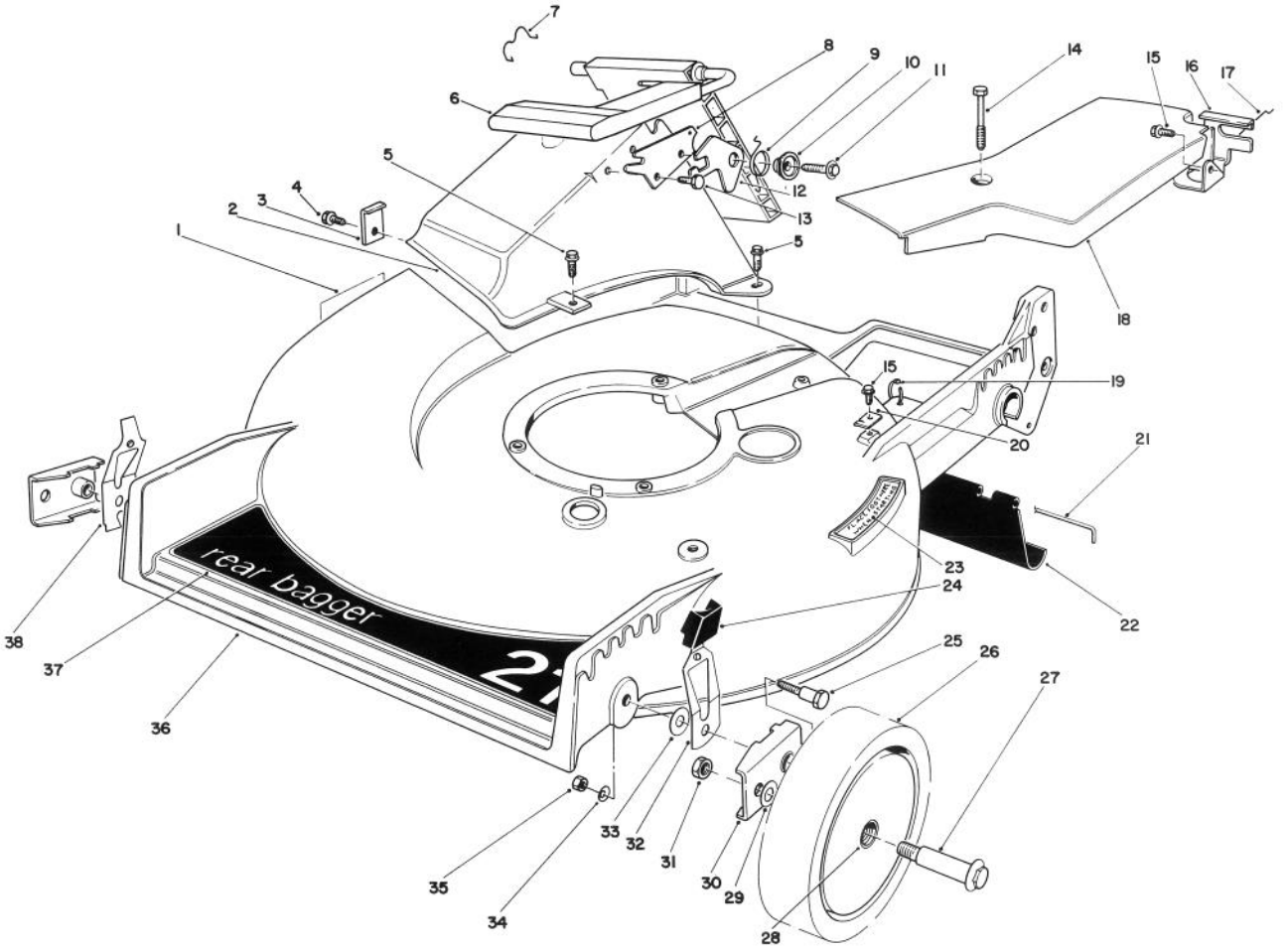

HOUSING ASSEMBLY

Ref. No.	Part No.	Description	No. Used
1	43-8480	Decal — Danger	1
2	46-3500	Tunnel — Discharge	1
3	47-6540	Clip — Tunnel	1
4	12-3270	Screw — Thread Forming, Hex. Washer Hd.	1
5	46-6811	Screw — Thread Forming, Hex. Washer Hd.	3
6	51-0200	Discharge Door Assembly	1
7	47-5840	Door — Retainer	1
8	23-1040	Plate — Latch	1
9	33-4860	Spring — Torsion	1
10	43-4840	Spacer — Latch	1
11	46-8091	Screw — Self Tapping, Hex. Washer Hd.	1

Ref. No.	Part No.	Description	No. Used
12	42-4010	Latch — Safety	1
13	46-8090	Screw — Self Tapping, Hex. Washer Hd.	1
14	37-7260	Capscrew — Special	2
15	32144-11	Screw — Thread Forming, Hex. Washer Hd.	2
16	46-5870	Bracket — Traction Adjustment	1
17	46-7030	Retainer — Cable	1
18	52-7400	Cover — Belt	1
19	3290-378	Cable Tie	1
20	62-3720	Clamp — Cable	1
21	33-3208	Rod — Shield	1
22	44-0580	Shield — Trailing	1
23	46-7370	Decal — Step Pad	1

©The Toro Company — 1986

PRICE $1.00

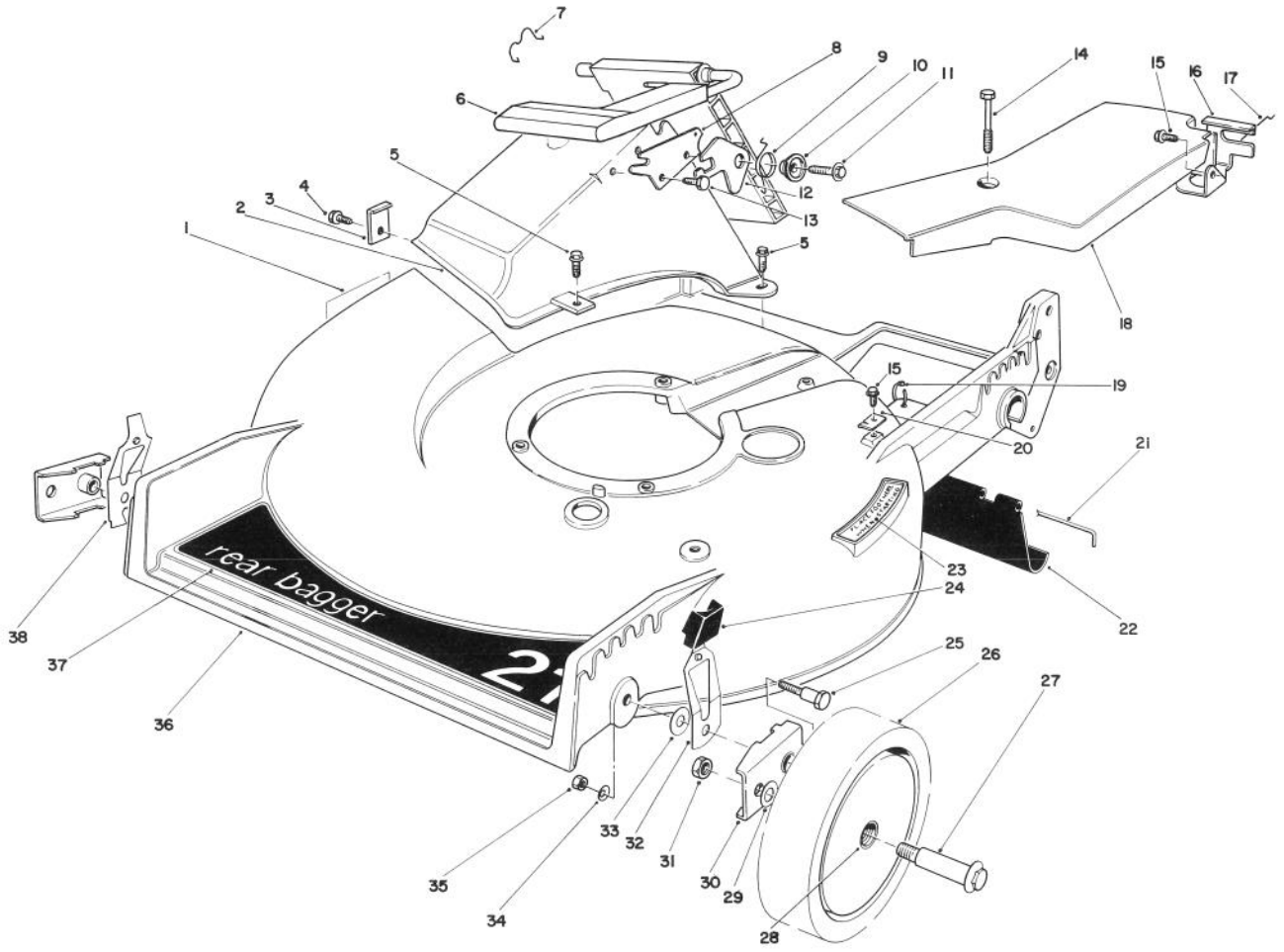

HOUSING ASSEMBLY (Continued)

Ref. No.	Part No.	Description	No. Used
24	25-7740	Knob Arm	2
25	44-5270	Screw — Pivot	2
26	11-9509	Wheel & Tire Assembly (Incl. Ref. #28)	2
27	27-6230	Wheel Bolt	2
28	27-6250	Bushing — Wheel	4
29	40-1940	Washer — Wheel Bolt	2
30	47-2940	Pivot Arm Assembly	2

Ref. No.	Part No.	Description	No. Used
31	52-3620	Nut — Lock	2
32	52-7480	Spring Arm Assembly (L.H.)	1
33	5-4460	Washer — Pivot	2
34	3290-456	Washer — Belleville	2
35	3296-29	Nut — Lock	2
36	11-4099	Housing (Incl. Ref. #1, 5 & 23)	1
37	44-0450	Decal — 21" Rear Bagger	1
38	52-7490	Spring Arm Assembly (R.H.)	1

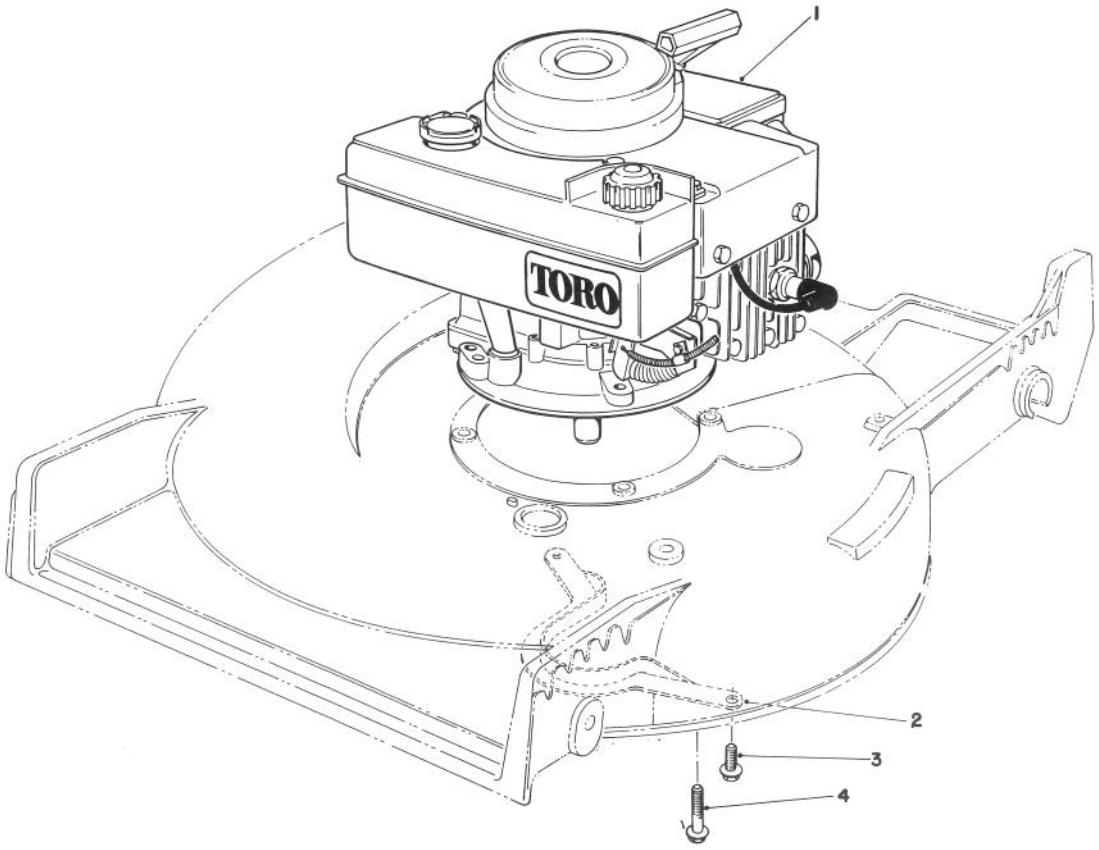

ENGINE ASSEMBLY

Ref. No.	Part No.	Description	No. Used
1		Engine	1
2	62-3780	Guide — Belt	1

Ref. No.	Part No.	Description	No. Used
3	11-9760	Screw — Thread Forming	2
4	11-0581	Screw — Thread Forming	3

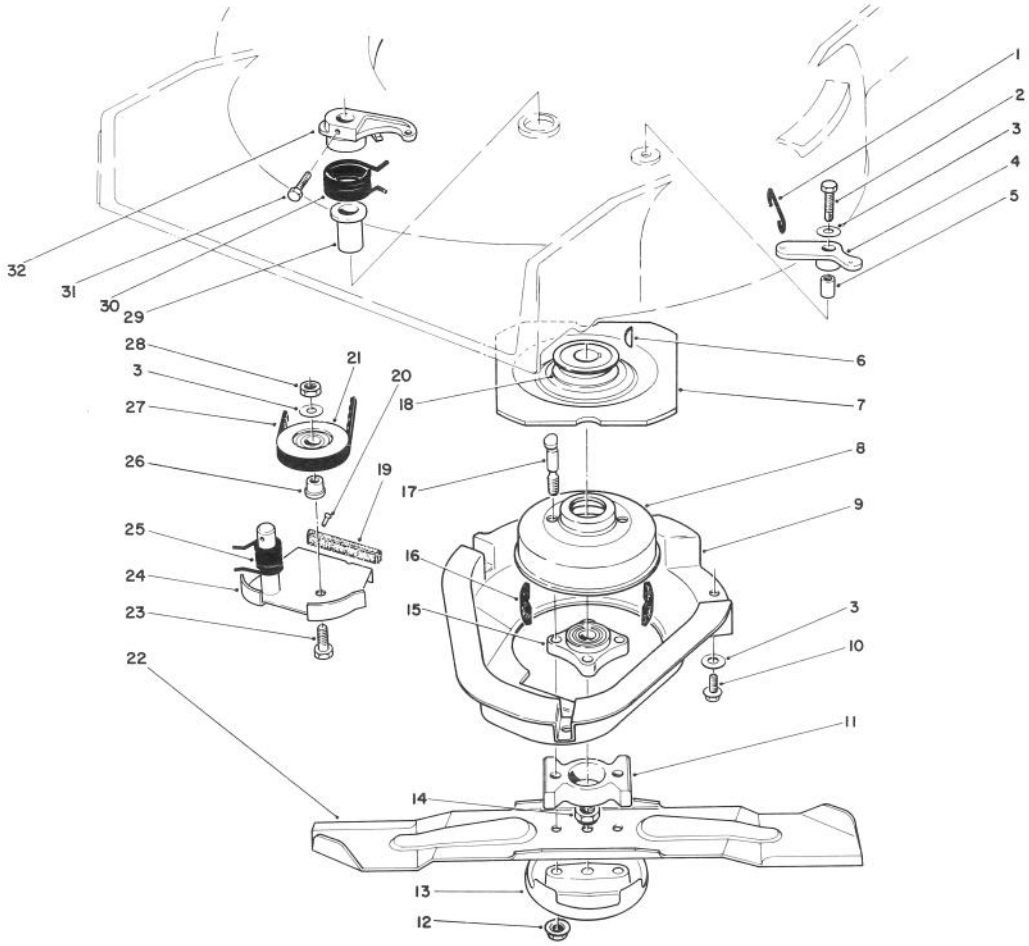

BLADE BRAKE CLUTCH ASSEMBLY

Ref. No.	Part No.	Description	No. Used
1	49-2810	Link — Control	1
2	32104-107	Screw — Self Tap Hex. Hd.	1
3	3256-23	Washer — Plain	5
4	49-7960	Bell Crank	1
5	49-7950	Sleeve — Bell Crank	1
6	3257-3	Key Woodruff	1
7	56-6160	Flywheel	1
8	56-6170	Drum — Brake	1
9	46-5690	Shield	1
10	32144-11	Screw — Thread Forming Hex. Washer Hd.	3
11	42-6760	Spacer — Blade	1
12	54-9190	Nut — Lock	2
13	42-0910	Cup — Anti Scalp	1
14	3296-33	Nut — Lock	1
15	42-6890	Hub Assembly	1
16	52-3480	Dampener — Vibration	2

Ref. No.	Part No.	Description	No. Used
17	42-3190	Bolt — Blade	2
18	56-6180	Pulley Driver	1
19		Pad — Brake	1
20	3295-23	Rivet — Semi Tubular	2
21	46-5650	Pulley Idler	1
22	42-1000	Blade 21"	1
23	322-16	Capscrew	1
24	49-7920	Brake Plate (Incl. Ref. #19 & 20)	1
25	46-5670	Spring — Torsion Lower	1
26	46-5630	Hub — Idler Pulley	1
27	42-0884	V-Belt	1
28	3296-47	Nut — Lock	1
29	46-6680	Bushing — Flanged	1
30	49-7970	Spring — Torsion Upper	1
31	32104-96	Screw — Self Tap Hex. Hd.	1
32	49-2820	Lever	1

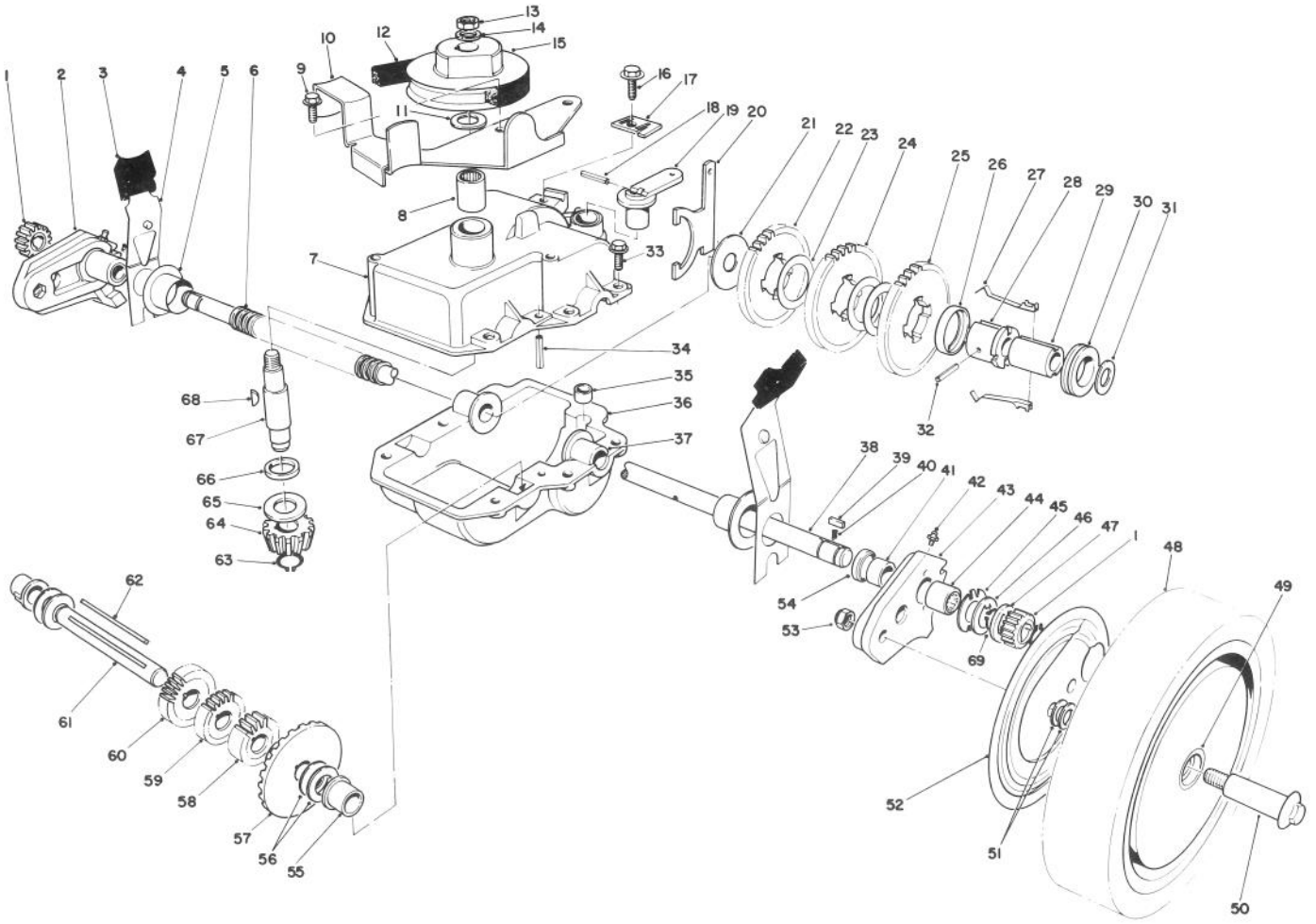

GEAR CASE ASSEMBLY

Ref. No.	Part No.	Description	No. Used
1	39-9160	Pinion	2
2	49-7720	Pivot Arm Assembly — R.H. (Incl. Ref. #41, 42, 44 & 54)	1
3	25-7740	Knob — Arm	2
4	44-1010	Spring Arm Assembly	2
5	42-3520	End Cap	2
6	24-7922	Cover — Drive Shaft	1
7	11-8709	Upper Case Assembly (Incl. Ref. #8 & 66)	1
8	47-6720	Bearing	1
9	12-3270	Screw — Special	2
10	49-8460	Bracket — Belt Guide	1
11	36-4790	Washer — Thrust	1
12	36-8070	V-Belt	1
13	3296-5	Locknut	1
14	3256-45	Washer	1
15	39-6740	Pulley	1
16	32144-11	Screw — Thread Forming	1
17	46-5610	Cable Clamp	1
18	32121-99	Coil Pin	1
19	29-9560	Lever — Shift	1
20	29-9520	Shift Yoke	1
21	29-9690	Washer	1

Ref. No.	Part No.	Description	No. Used
22	42-4740	Gear — 38T	1
23	36-4770	Spacer — Gear	3
24	29-9271	Gear — 42T	1
25	46-3560	Gear — 52T	1
26	55-8020	Key Retainer	1
27	29-9330	Key	2
28	55-8010	Sleeve — Gear	1
29	39-6720	Sleeve	1
30	29-9340	Shift Collar	1
31	36-4780	Washer	1
32	32121-106	Coil Pin	1
33	49-2040	Screw — Tapping	6
34	32121-100	Roll Pin	1
35	29-9570	Bushing — Yoke	1
36	29-9410	Lower Case	1
37	47-5220	Bushing — Output Shaft	2
38	62-3280	Output Shaft	1
39	39-9680	Key — Rectangular	2
40	39-9650	Spring	2
41	47-2890	Bushing	2
42	302-56	Fitting Grease	2
43	49-7710	Pivot Arm Assembly — L.H. (Incl. Ref. #41, 42, 44 & 54)	1

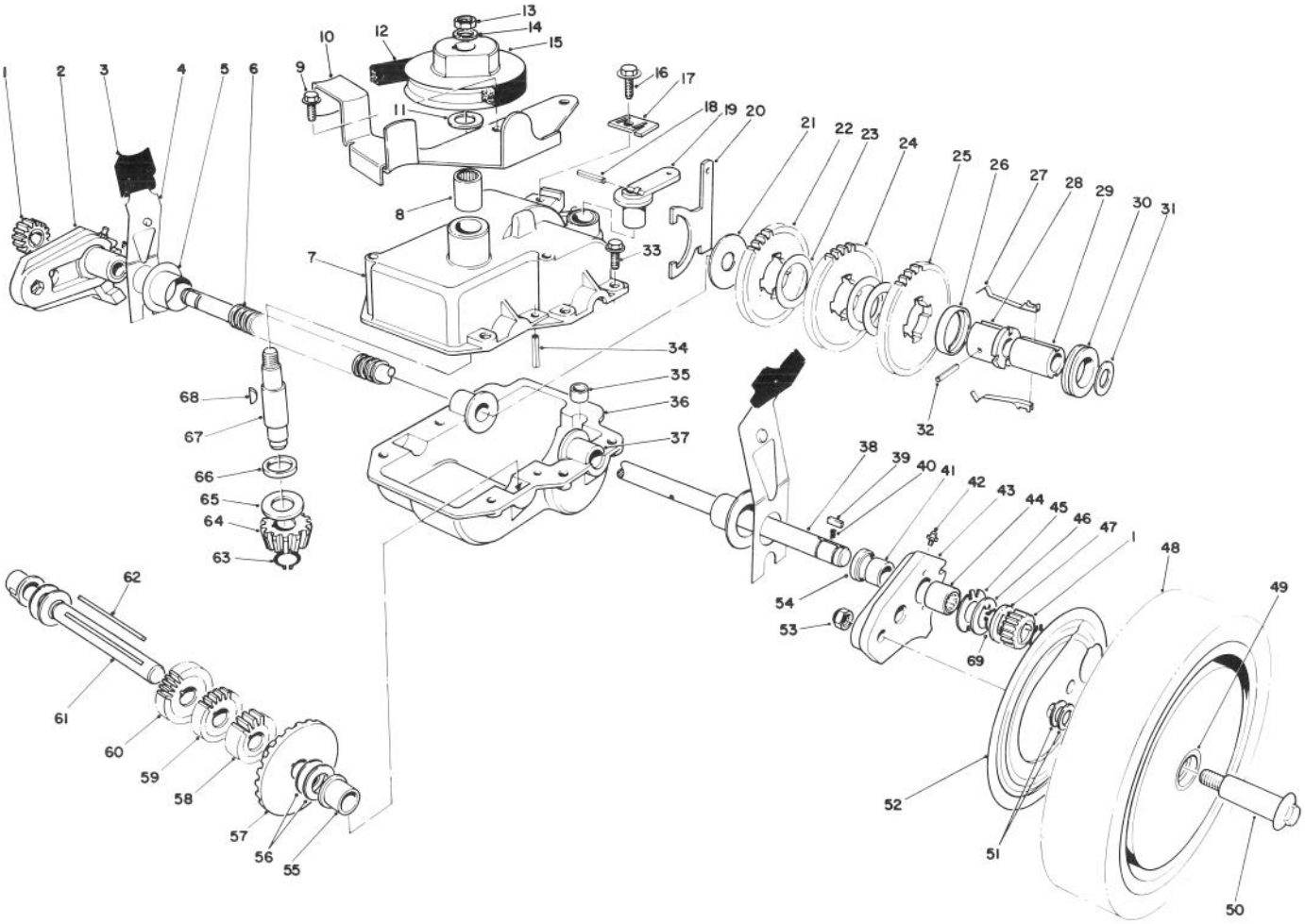

GEAR CASE ASSEMBLY (Continued)

Ref. No.	Part No.	Description	No. Used
44	48-2060	Needle Bearing	2
45	49-7690	Washer — Thrust, Inner	2
46	49-7700	Washer — Thrust, Outer	2
47	32151-68	Retaining Ring	4
48	51-2741	Wheel, Tire & Gear Assembly (Incl. Ref. #49)	2
49	27-6250	Bushing — Wheel	4
50	27-6231	Wheel Bolt	2
51	40-1940	Washer — Wheel Bolt	4
52	52-4860	Cover — Wheel	2
53	52-3620	Nut — Lock	2
54	47-6730	Seal	2
55	52-5410	Bushing — Short Shaft	2
56	36-4791	Washer — Thrust	4

Ref. No.	Part No.	Description	No. Used
57	39-6670	Gear — Bevel	1
58	46-3540	Gear — 12 Tooth	1
59	46-3550	Gear — 14 Tooth	1
60	39-6650	Gear — 18 Tooth	1
61	46-9470	Shaft — Intermediate	1
62	39-7843	Key — Square	1
63	32151-57	Ring — Retaining	1
64	39-6660	Pinion — Bevel	1
65	47-2910	Washer — Thrust	1
66	47-7260	Seal	1
67	39-6690	Input Shaft	1
68	3257-1	Key — Woodruff	2
69	62-3830	Washer — Thrust, Outer	2
*	46-3582	Gear Case Assembly Complete	1

* Not Illustrated

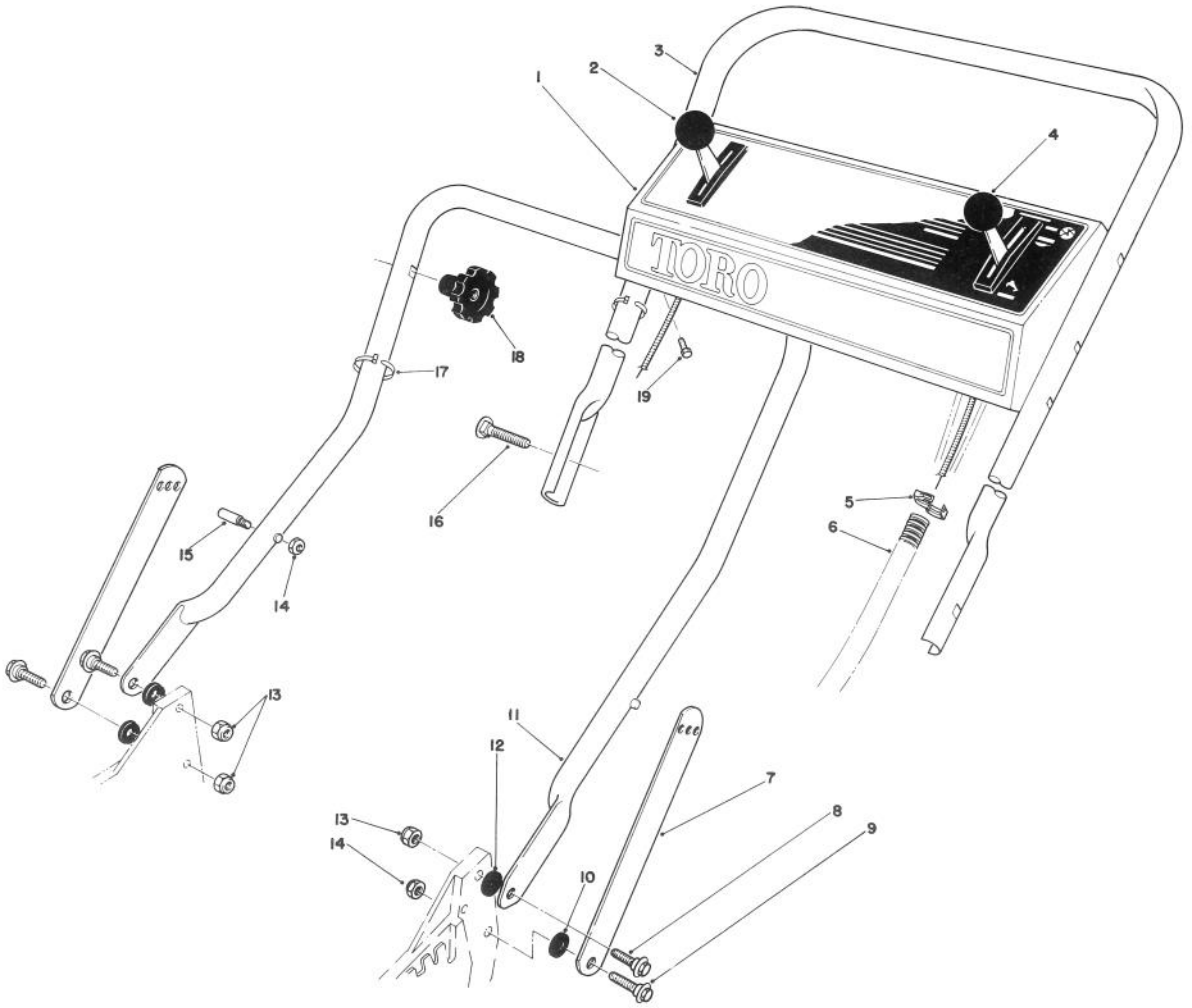

HANDLE ASSEMBLY

Ref. No.	Part No.	Description	No. Used
1	61-4320	Panel — Control	1
2	46-5430	Control — Ground Speed (Bend Type #1) (Sheath Lg. 42-1/4 inches) (Wire Lg 2-3/8 inches)	1
3	49-4234	Handle — Upper	1
4	46-6010	Control — Throttle (Sheath Lg. 55-7/8 inches) (Wire Lg. 2-1/2 inches)	1
5	2412-50	Clip — Convoluted Tubing	4
6	46-6440	Cover — Control Cables	1
7	43-1370	Latch — Handle	2

Ref. No.	Part No.	Description	No. Used
8	27-7211	Screw — Shoulder	2
9	27-7210	Screw — Shoulder	2
10	3-3287	Spacer — Handle Latch	4
11	43-1361	Lower Handle Assembly	1
12	55-8060	Spacer	2
13	3296-29	Nut — Lock	3
14	3296-47	Nut — Lock	3
15†	49-2750	Pin — Handle	2
16	17-9421	Screw — Handle	2
17	3290-378	Cable Tie	2
18	19-4050	Knob — Handle Release	2
19	32104-76	Screw — Self Tapping Slotted	4

† Service Replacement Parts

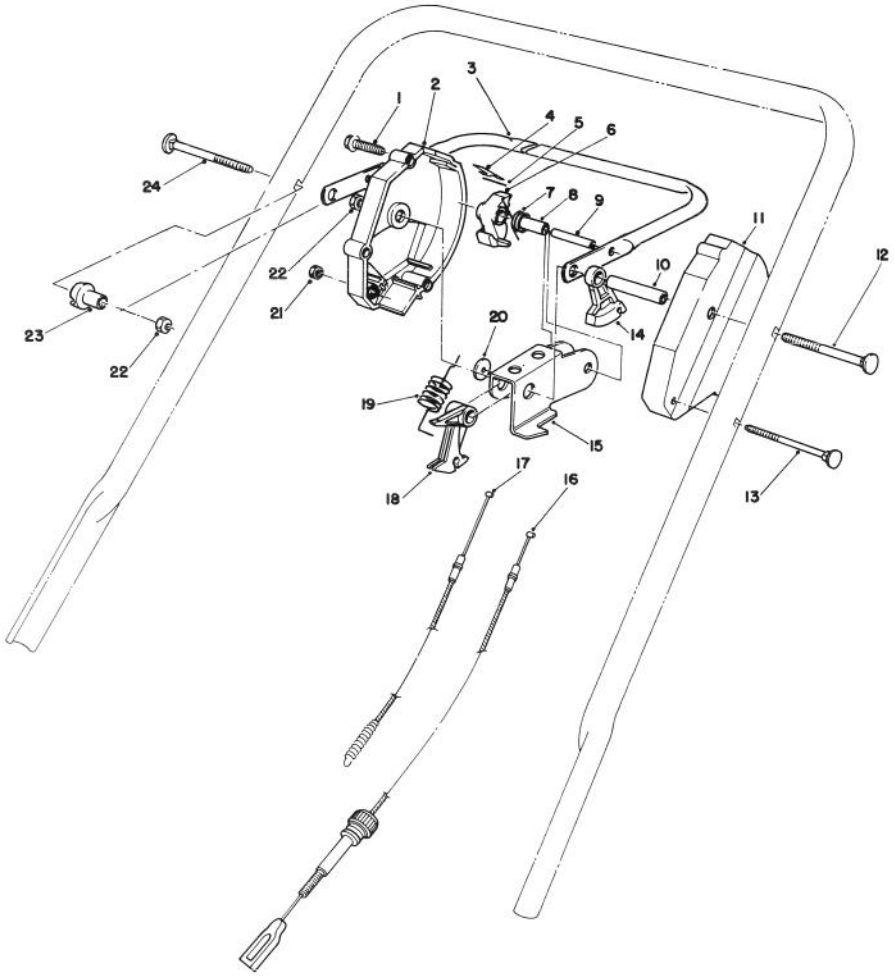

TRACTION CONTROL ASSEMBLY

Ref. No.	Part No.	Description	No. Used
1	46-7040	Screw — Thread Forming Hex. Washer Hd.	3
2	12-3429	Housing — Control R.H. (Incl. Ref. #4 & 5)	1
3	62-3810	Control Bar Assembly	1
4	52-7410	Spring — Leaf	1
5	57-6290	Pin — Insert	1
6	46-5530	Hook — Control	1
7	46-5510	Spring — Torsion	1
8	46-5550	Bushing — P.M.	1
9	32121-9	Pin — Coil	1
10	46-5590	Spacer	1
11	46-5460	Housing — Control L.H.	1

Ref. No.	Part No.	Description	No. Used
12	17-9422	Screw — Handle	1
13	46-6431	Screw — Handle	1
14	46-5520	Lever — Traction	1
15	62-3710	Rocker	1
16	46-5480	Cable — Traction	1
17	62-3770	Cable — Clutch	1
18	46-5540	Lever — Cable	1
19	49-8020	Spring — Extension	1
20	46-5600	Washer — Nylon	1
21	3296-8	Locknut	1
22	3296-58	Locknut	2
23	49-1630	Support — Spacer	1
24	17-9421	Screw — Handle	1

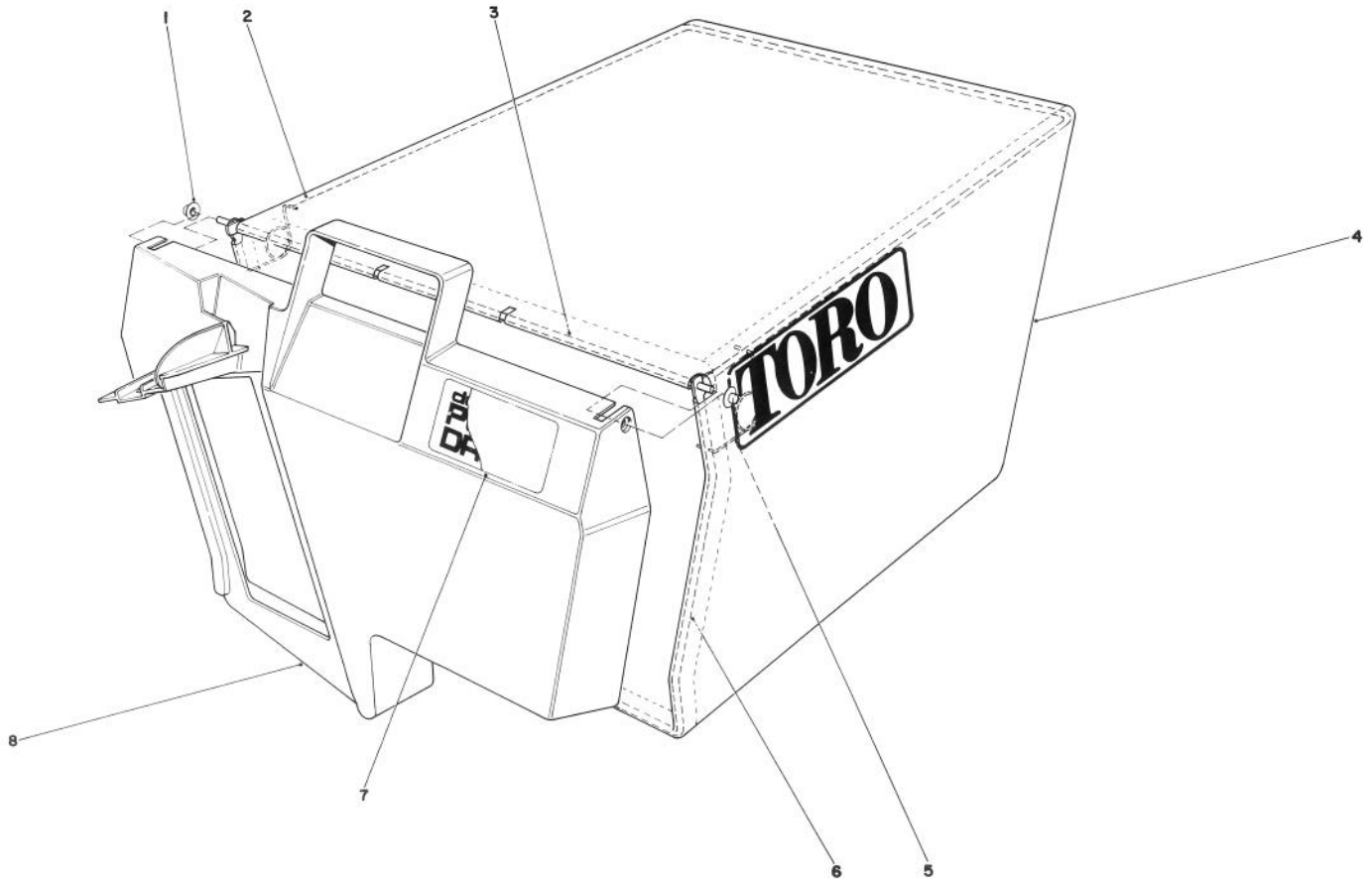

GRASS BAG ASSEMBLY NO. 11-0189

Ref. No.	Part No.	Description	No. Used
1	3290-422	Nut — Push	2
2	42-4030	Bag Frame — Upper	1
3	33-4820	Hinge — Bag Door	1
4	8-2759	Grass Bag	1

Ref. No.	Part No.	Description	No. Used
5	36-6910	Spring	2
6	42-4020	Frame — Bag	1
7	40-2240	Decal — Bag Door	1
8	37-1392	Door — Grass Bag	1

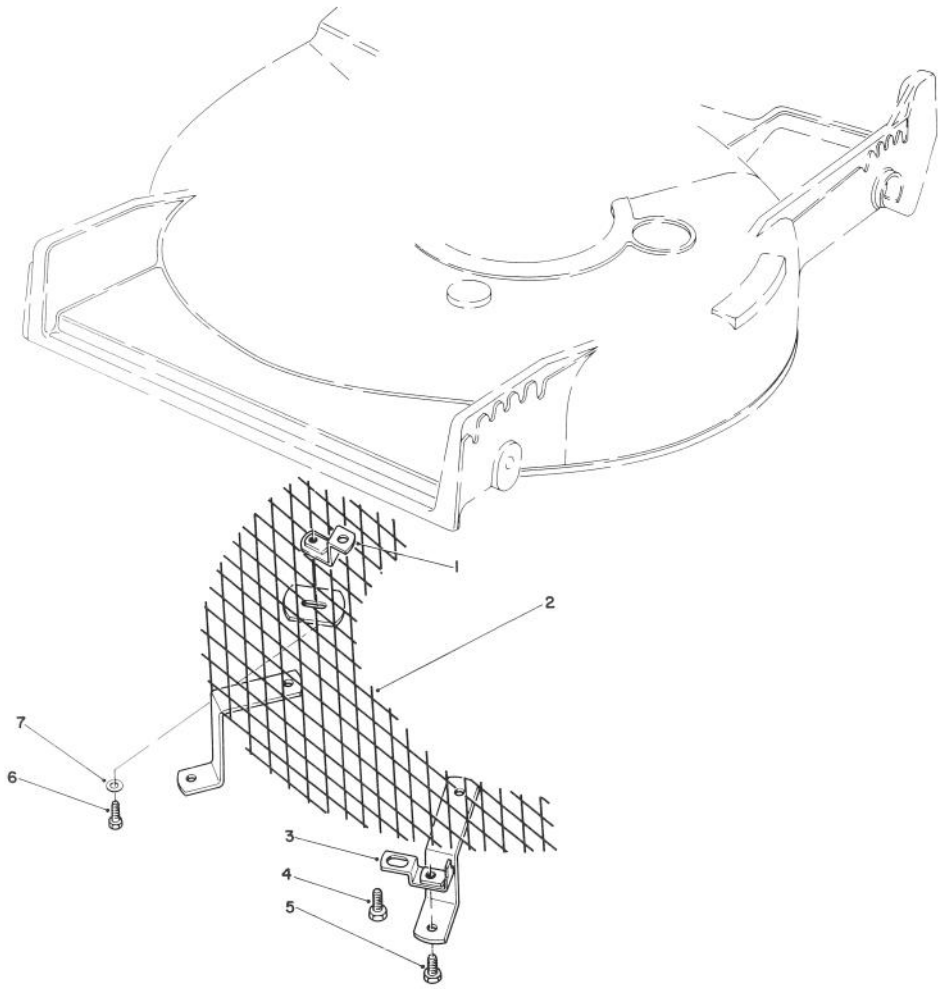

LEAF SHREDDER KIT MODEL NO. 59157 (Optional)

Ref. No.	Part No.	Description	No. Used
1	47-6260	Bracket	1
2	47-6230	Screen	1
3	46-4880	Mounting Bracket	2
4	32144-11	Screw — Self Tapping	3

Ref. No.	Part No.	Description	No. Used
5	321-3	Capscrew — Hex. Hd.	2
6	321-5	Capscrew — Hex. Hd.	1
7	3256-1	Washer	1

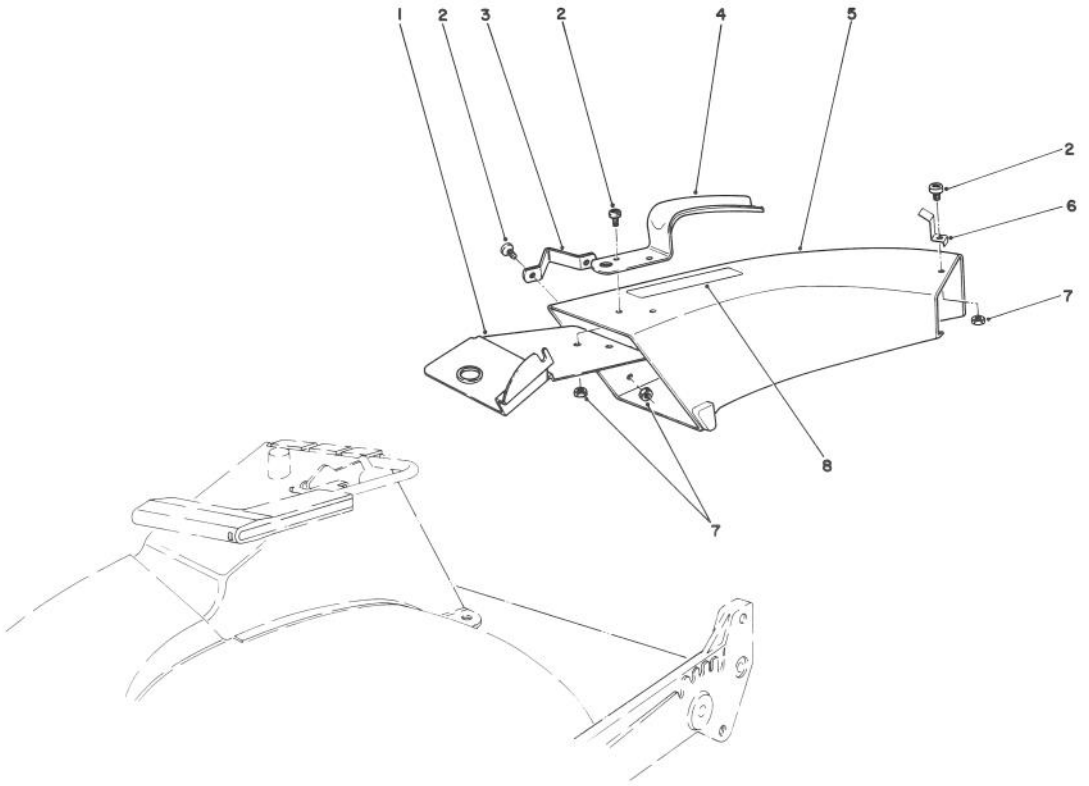

SIDE DISCHARGE CHUTE MODEL NO. 59108 (Optional)

Ref. No.	Part No.	Description	No. Used
1	44-2330	Plate — Discharge Chute	1
2	3251-3	Screw	5
3	46-6580	Bracket — Side	1
4	42-1340	Handle — Grass Chute	1
5	11-7149	Chute — Discharge (Incl. Ref. #8)	1

Ref. No.	Part No.	Description	No. Used
6	49-2630	Clip — Cable Stop	1
7	3296-12	Locknut	5
8	39-9120	Decal — Caution	1

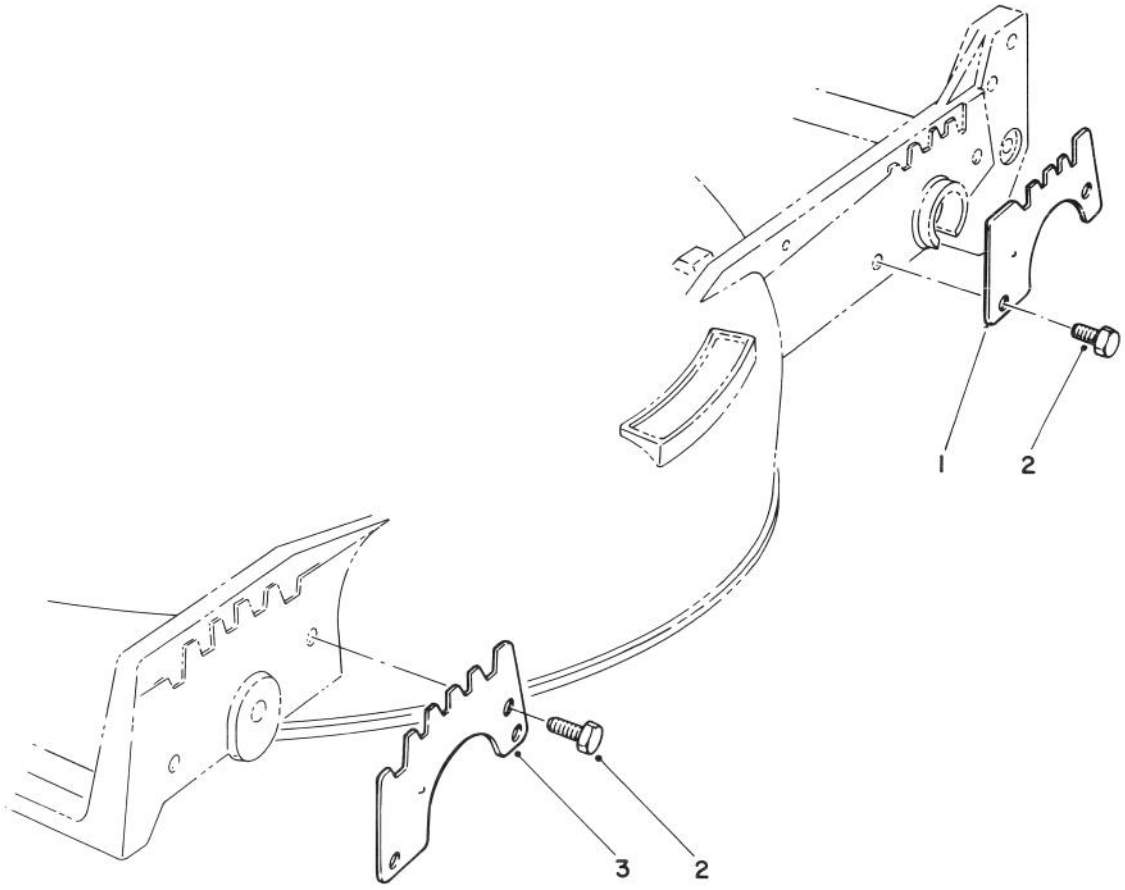

WEAR PLATE KIT NO. 49-4080 (Optional)

Ref. No.	Part No.	Description	No. Used
1	49-4070	Plate — Wear, Rear	2
2	32104-17	Screw — Thread Forming	8

Ref. No.	Part No.	Description	No. Used
3	43-5050	Plate — Wear, Front	2

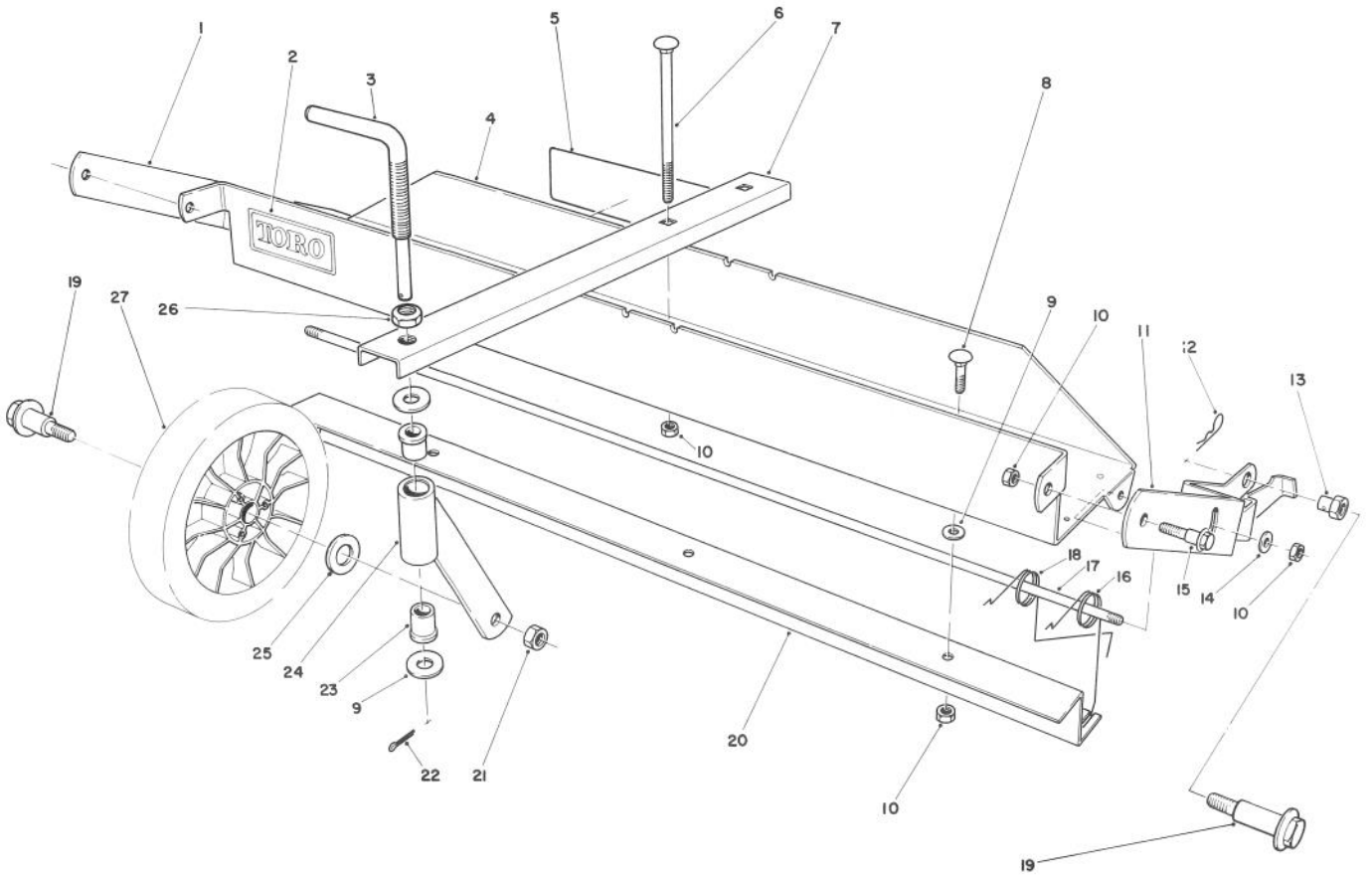

DETHATCHER KIT MODEL NO. 59126 (Optional)

Ref. No.	Part No.	Description	No. Used
1	47-6030	Frame Mount — R.H.	1
2	44-0810	Decal — Toro	1
3	47-6120	Rod — Castor Adjust	1
4	47-2390	Frame — Main (Incl. Ref. #2)	1
5	47-7500	Decal — Instruction	1
6	3230-13	Carriage Bolt	2
7	47-6090	Castor Frame	1
8	3230-1	Carriage Bolt	3
9	3256-23	Washer	5
10	32153-3	Locknut	9
11	47-6020	Frame Mount — L.H.	1
12	3290-255	Hairpin Cotter	2
13	47-6130	Pivot Nut	2
14	3256-24	Washer — Plain	2

Ref. No.	Part No.	Description	No. Used
15	37-8771	Screw — Shoulder	2
16	47-6040	Spring — Dethatcher	6
17	47-6050	Rod — Spring Support	1
18	47-6041	Spring — Dethatcher	6
19	27-6230	Wheel Bolt	3
20	47-6010	Strap — Spring Guide	1
21	3296-6	Locknut	1
22	3272-10	Cotter Pin	1
23	47-6110	Bushing — Flange	2
24	47-6060	Castor Tube & Support	1
25	40-1940	Washer — Wheel	1
26	3220-5	Nut — Jam	1
27	34-0380	Wheel Assembly	1
*	11-5239	Loose Parts	1

* Not Illustrated

ENGINE TECUMSEH MODEL NO. TVS100-44013A

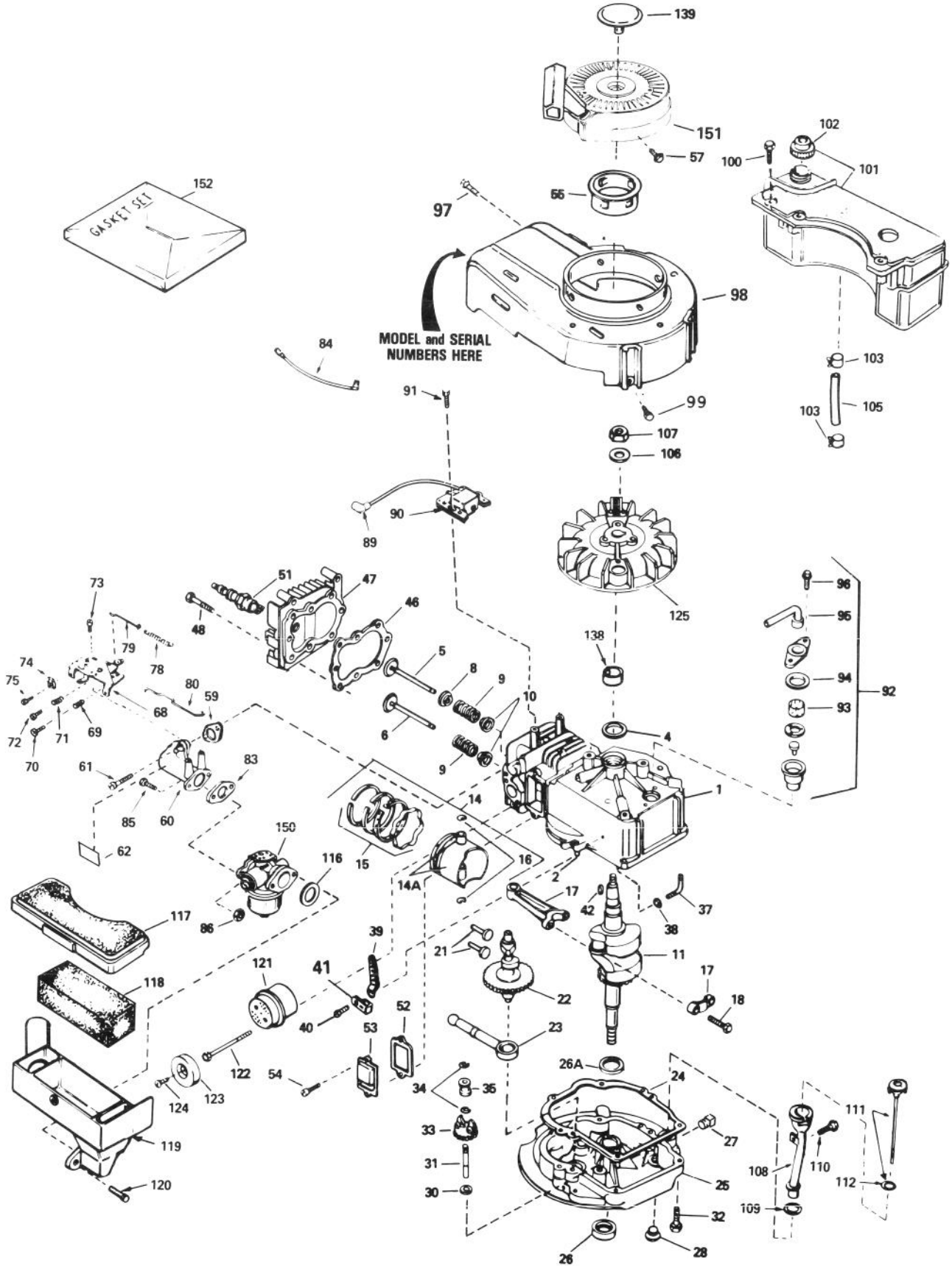

ENGINE TECUMSEH MODEL NO. TVS100-44013A

Ref. No.	Part No.	Description	No. Used
1	35010	Cylinder Assembly (Incl. Ref. #2 & 4)	1
2	26727	Pin — Dowel	2
4	32600	Seal — Oil	1
5	29314B	Valve — Intake (Std.) (Incl. Ref. #10)	1
5	29315C	Valve — Intake (1/32" oversize) (Incl. Ref. #10)	1
6	29313C	Valve — Exhaust (Std.) (Incl. Ref. #10)	1
6	29315C	Valve — Exhaust (1/32" oversize) (Incl. Ref. #10)	1
8	35390	Seal Assembly — Intake Valve	1
9	31672	Spring — Valve	2
10	31673	Cap — Lower Valve Spring	2
11	35483	Crankshaft	1
14	34851	Piston — Pin & Ring Assy. (Std.) (Incl. Ref. #14A, 15 & 16)	1
14	34852	Piston — Pin & Ring Assembly (.010 oversize) (Incl. Ref. #14A, 15 & 16)	1
14	34853	Piston — Pin & Ring Assembly (.020 oversize) (Incl. Ref. #14A, 15 & 16)	1
14A	32603B	Piston & Pin Assembly (Std.) (Incl. Ref. #16)	1
14A	32604B	Piston & Pin Assembly (.010 oversize) (Incl. Ref. #16)	1
14A	32605B	Piston & Pin Assembly (.020 oversize) (Incl. Ref. #16)	1
15	34854	Ring Set — Piston (Std.)	1
15	34855	Ring Set — Piston (.010 oversize)	1
15	34856	Ring Set — Piston (.020 oversize)	1
16	20381	Ring — Piston Pin Retaining	2
17	30963B	Rod Assembly — Connecting (Incl. Ref. #18)	1
18	32610A	Screw — Connecting Rod	2
21	27241	Lifter — Valve	2
22	33553	Camshaft (Mechanical Compression Release)	1
23	29914	Pump Assembly — Oil	1
24	*35261	Gasket — Mounting Flange	1
25	34311B	Flange Assembly — Mounting (Incl. Ref. #26, 27, 28 & 31)	1
26	27897	Seal — Oil	1
26A	32323	Washer — Thrust	1
27	9556	Plug — Pipe	1
28	27244	Plug — Oil Drain	1
30	30590A	Washer — Flat	1
31	30574	Shaft — Mechanical Governor	1
32	650488	Screw — Hex. Hd. Sems	6
33	30591	Gear Assembly — Governor (Incl. Ref. #30)	1

Ref. No.	Part No.	Description	No. Used
34	29193	Ring — Retaining	2
35	30588A	Spool — Governor	1
37	30589	Rod — Governor (Incl. Ref. #38)	1
38	28277	Washer — Flat	1
39	31383A	Lever — Governor	1
40	650548	Screw — Hex. Washer Hd.	1
41	31335	Clamp — Governor Lever	1
42	611004	Key — Flywheel (Solid State)	1
46	*33015	Gasket — Cylinder Head	1
47	34342	Head — Cylinder	1
48	6021A	Screw — Hex. Flange Hd.	8
51	35078	Plug — Spark (Autolite 458, Champion J-19LM or equivalent)	1
52	*27234	Gasket — Breather	1
53	32755	Cover — Valve Spring	1
54	650128	Screw — Fil. Hd. Sems	2
55	35000	Hub — Starter	1
57	650884	Screw — Hex. Washer Hd.	4
59	*34690	Gasket — Intake Pipe	1
60	31384A	Pipe — Intake (Incl. Ref. #59)	1
61	650451	Screw — Hex Hd. Sems	2
62	34144	Decal — Primer	1
68	33131A	Control Assy. — Remote Speed (Incl. Ref. #69 thru 72)	1
69	33802	Spring — Compression	1
70	650777	Screw — Fil. Hd.	1
71	31342	Spring — Compression	1
72	650549	Screw — Fil. Hd.	1
73	30200	Screw — Hex. Washer Hd. Self-Tap Sems	2
74	27793	Clip — Conduit	1
75	28942	Screw — Hex. Washer Hd. Sems	1
78	31361	Spring — Governor	1
79	34337	Link — Governor Spring	1
80	34336	Link — Governor-to-Throttle	1
83	*26756	Gasket — Carburetor	1
84	34231	Wire — Ground	1
85	6201	Screw — Hex. Hd.	2
86	29752	Nut & Lockwasher	2
89	610118	Cover — Spark Plug	1
90	34443A	Solid State Assembly	1
91	650814	Screw — Hex. Hd. Sems	2
92	34214A	Breather Assembly (Incl. Ref. #93 thru 96)	1
93	33734	Element — Breather	1
94	*33735	Gasket — Breather	1
95	33886	Tube — Breather	1
96	30200	Screw — Hex. Washer Hd. Self-Tap Sems	2
97	30200	Screw — Hex. Washer Hd. Self-Tap Sems	2
98	35484	Housing — Blower	1
99	650831	Screw — Hex. Washer Hd. Powerlok Thread	2

* Indicates parts included in Gasket Set, Ref. #152.

ENGINE TECUMSEH MODEL NO. TVS100-44013A (Continued)

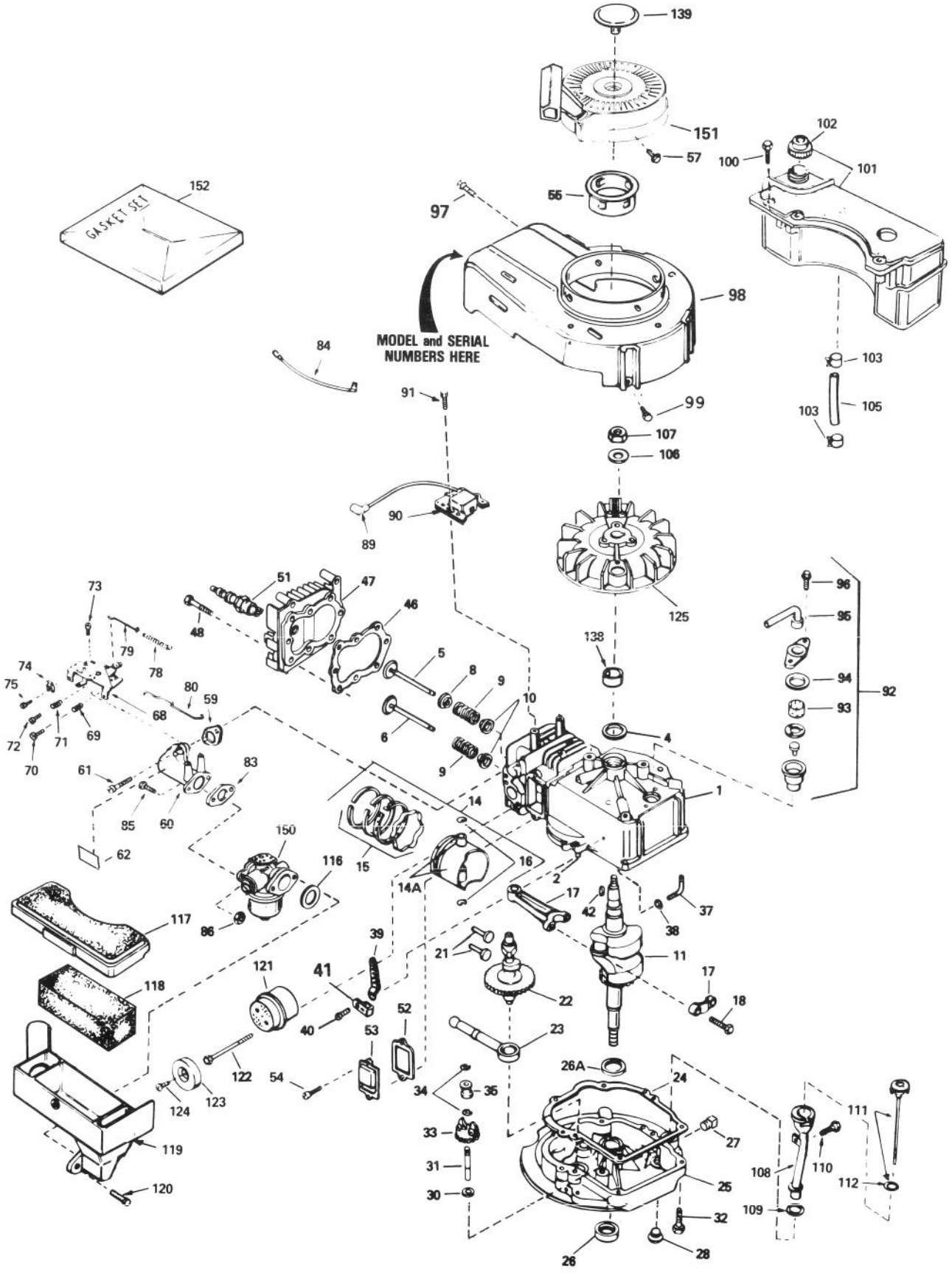

ENGINE TECUMSEH MODEL NO. TVS100-44013A (Continued)

Ref. No.	Part No.	Description	No. Used
100	28763	Screw — Hex. Washer Hd. Shakeproof	3
101	34476	Tank Assembly — Fuel (Incl. Ref. #102)	1
102	33032	Cap — Fuel Tank	1
103	26460	Clamp — Fuel Line	2
105	30705	Line — Fuel	1
106	650815	Washer — Belleville	1
107	650816	Nut — Flywheel	1
108	34264	Tube — Oil Fill	1
109	34265	Gasket — Oil Fill Tube	1
110	650562	Screw — Hex. Washer Hd. Shakeproof	1
111	34267	Dipstick — Oil (Incl. Ref. #112)	1
112	33590	"O" Ring	1
116	*34338	Gasket — Air Cleaner	1
117	34341A	Cover — Air Cleaner	1
118	34340	Element — Air Cleaner	1
119	34858	Body — Air Cleaner	1
120	650806	Screw — Hex. Washer Hd. Shoulder	2
121	27181B	Muffler (Incl. Ref. #122)	1
122	650795	Screw — Hex. Hd.	2
123	32431	Cover — Muffler	1
124	650760	Screw — Pan Hd. Taptite	1
125	611046A	Flywheel	1
138	34080	Spacer — Flywheel Key	1
139	35392	Plug — Starter	1
150	632098	Carburetor (Inc. Ref. #83)	1
151	590635	Starter — Rewind	1
152	33238C	Gasket Set (Incl. Items Marked *)	1

* Indicates parts included in Gasket Set, Ref. #152.

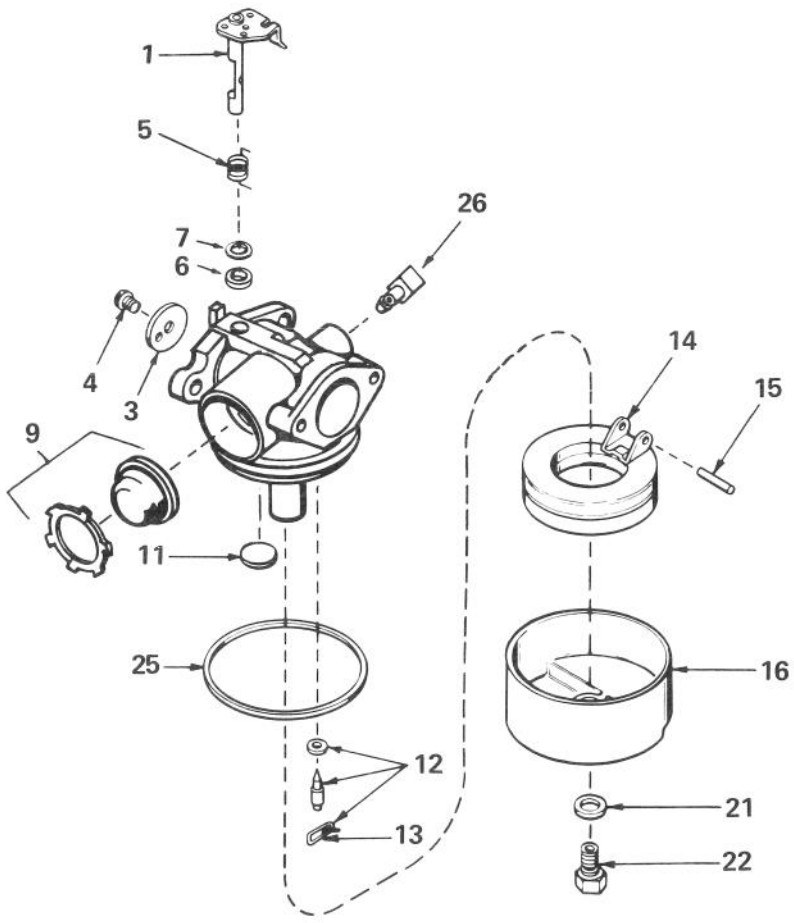

CARBURETOR NO. 632098

Ref. No.	Part No.	Description	No. Used
1	631615	Shaft & Lever Assy., Throttle	1
3	631616	Shutter — Throttle	1
4	650506	Screw — Throttle Shutter	1
5	631767	Spring — Throttle Return	1
6	631971	Seal — Dust	1
7	631184	Washer — Flat	1
9	632047	Primer Assembly	1
11	631027	Plug — Welch	1
12	631021	Inlet Needle — Seat & Clip Assy. (Incl. Ref. #13)	1

Ref. No.	Part No.	Description	No. Used
13	631022	Clip — Inlet Needle	1
14	632019	Float — Carburetor	1
15	631024	Shaft — Float	1
16	631700	Bowl — Float	1
21	631334	Gasket — Bowl-To-Body	1
22	631937	Nut — Float Bowl	1
25	631028	Gasket — Bowl-To-Body	1
26	631807	Fitting — Fuel Inlet	1

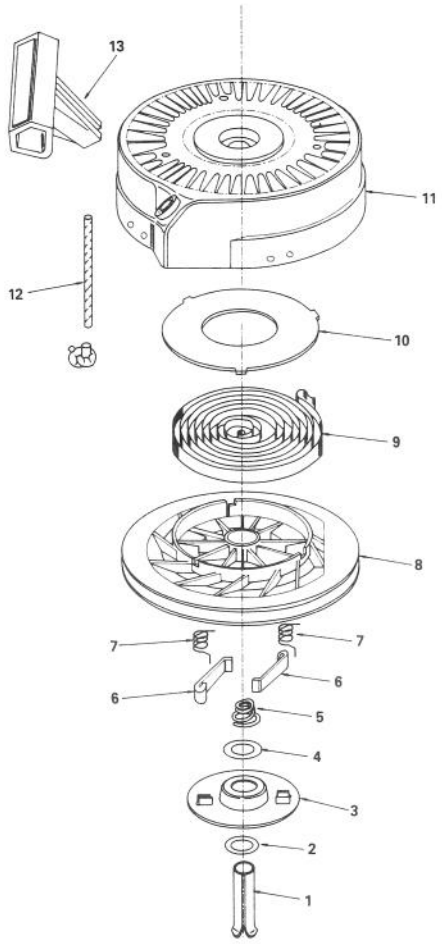

REWIND STARTER NO. 590635

Ref. No.	Part No.	Description	No. Used
1	590599	Pin — Spring	1
2	590600	Washer	1
3	590615	Retainer	1
4	590601	Washer	1
5	590598	Spring — Brake	1
6	590616	Dog — Starter	2
7	590617	Spring — Dog	2

Ref. No.	Part No.	Description	No. Used
8	590618	Pulley	1
9	590619	Spring — Rewind	1
10	590620	Cover — Spring	1
11	590622	Housing Assembly — Starter	1
12	590535	Rope — Starter (Length 62" & 9/64" dia.)	1
13	590452	Handle — Starter	1

PRODUCT CHANGES

In an effort to make improvements available to TORO owners as quickly as possible, minor changes are incorporated into Toro's products from time to time that do not become immediately shown in the Parts Catalog. If such a change apparently has been made in your unit, which is not reflected in your manual, see your TORO Distributor or his Authorized TORO Service Dealer for information and part numbers.

IDENTIFICATION AND ORDERING

MODEL AND SERIAL NUMBERS

The Mower has two identification numbers: a model number and a serial number. The two numbers are stamped on a decal which is located on the mower housing between the rear wheels. In any correspondence concerning the mower, supply model and serial numbers to assure that correct information and replacement parts are obtained.

To order replacement parts from an Authorized TORO Service Dealer, supply the following information:

1. Model and serial numbers of the mower.
2. Part number, description, and quantity of part(s) desired.

Note: Do not order by reference number if a parts catalog is being used; use the PART NUMBER.

The Toro Promise

A Two Year Limited Warranty

On All

Gasoline Powered Consumer Products

The Toro Company promises to repair your TORO Product if defective in materials or workmanship. The following time periods from the date of purchase apply:

Residential Product ..... 2 Years
Residential Products Used Commercially ..... 45 Days

The costs of parts and labor are included, but the customer pays the transportation costs. Just return any residential product to an Authorized TORO Service Dealer or TORO Distributor.

Should you feel your TORO Product is defective and wish to rely on The Toro Promise, the following procedure is recommended:

1. Contact any Authorized TORO Service Dealer, TORO Master Service Dealer, or TORO Distributor (the Yellow Pages of your telephone directory is a good reference source).
2. He will either instruct you to return the product to him or recommend another Authorized TORO Service outlet which might be more convenient.
3. Bring the product along with your original sales slip, or other evidence of purchase date, to the service dealer.
4. The servicing dealer will inspect the unit, advise you whether the product is defective and, if so, make all repairs necessary to correct the defect without extra charge to you.

If for any reason you are dissatisfied with the dealer's analysis of the defect or the service performed, you may contact us.

Write:

TORO Consumer Service Department
8111 Lyndale Avenue South
Minneapolis, Minnesota 55420

The above remedy of product defects through repair by an Authorized TORO Service Dealer is the purchaser's sole remedy for any defect.

THERE IS NO OTHER EXPRESS WARRANTY. ALL IMPLIED WARRANTIES OF MERCHANTABILITY AND FITNESS FOR USE ARE LIMITED TO THE DURATION OF THE EXPRESS WARRANTY.

Some states do not allow limitations on how long an implied warranty lasts, so the above limitation may not apply to you.

This warranty applies only to parts or components which are defective and does not cover repairs necessary due to normal wear, misuse, accidents, or lack of proper maintenance. Regular, routine maintenance of the unit to keep it in proper operating condition is the responsibility of the owner.

All warranty repairs reimbursable under The Toro Promise must be performed by an Authorized TORO Service Dealer using Toro approved replacement parts.

Repairs or attempted repairs by anyone other than an Authorized TORO Service Account are not reimbursable under The Toro Promise. In addition, these unauthorized repair attempts may result in additional malfunctions, the correction of which is not covered by warranty.

THE TORO COMPANY IS NOT LIABLE FOR INDIRECT, INCIDENTAL OR CONSEQUENTIAL DAMAGES IN CONNECTION WITH THE USE OF THE PRODUCT INCLUDING ANY COST OR EXPENSE OF PROVIDING SUBSTITUTE EQUIPMENT OR SERVICE DURING PERIODS OF MALFUNCTION OR NON-USE.

Some states do not allow the exclusion or limitation of incidental or consequential damages, so the above limitation or exclusion may not apply to you.

This warranty gives you specific legal rights, and you may also have other rights which vary from state to state.

COUNTRIES OTHER THAN THE UNITED STATES OR CANADA

Customers who have purchased TORO products exported from the United States or Canada should contact their TORO Distributor (Dealer) to obtain guarantee policies for your country, province or state. If for any reason you are dissatisfied with your Distributor's service or have difficulty obtaining guarantee information, contact the TORO importer. If all other remedies fail, you may contact us at The Toro Company.

Compliance with Radio Interference Regulations Certified.
Certifie Conforme au Reglement sur le Brouillage Radioelectrique.

LTS-610724