FORM NO. 3313-185

TORO®

MODEL NO. 20564-7000001 & UP

PARTS CATALOG

18″ REAR BAGGER ELECTRIC

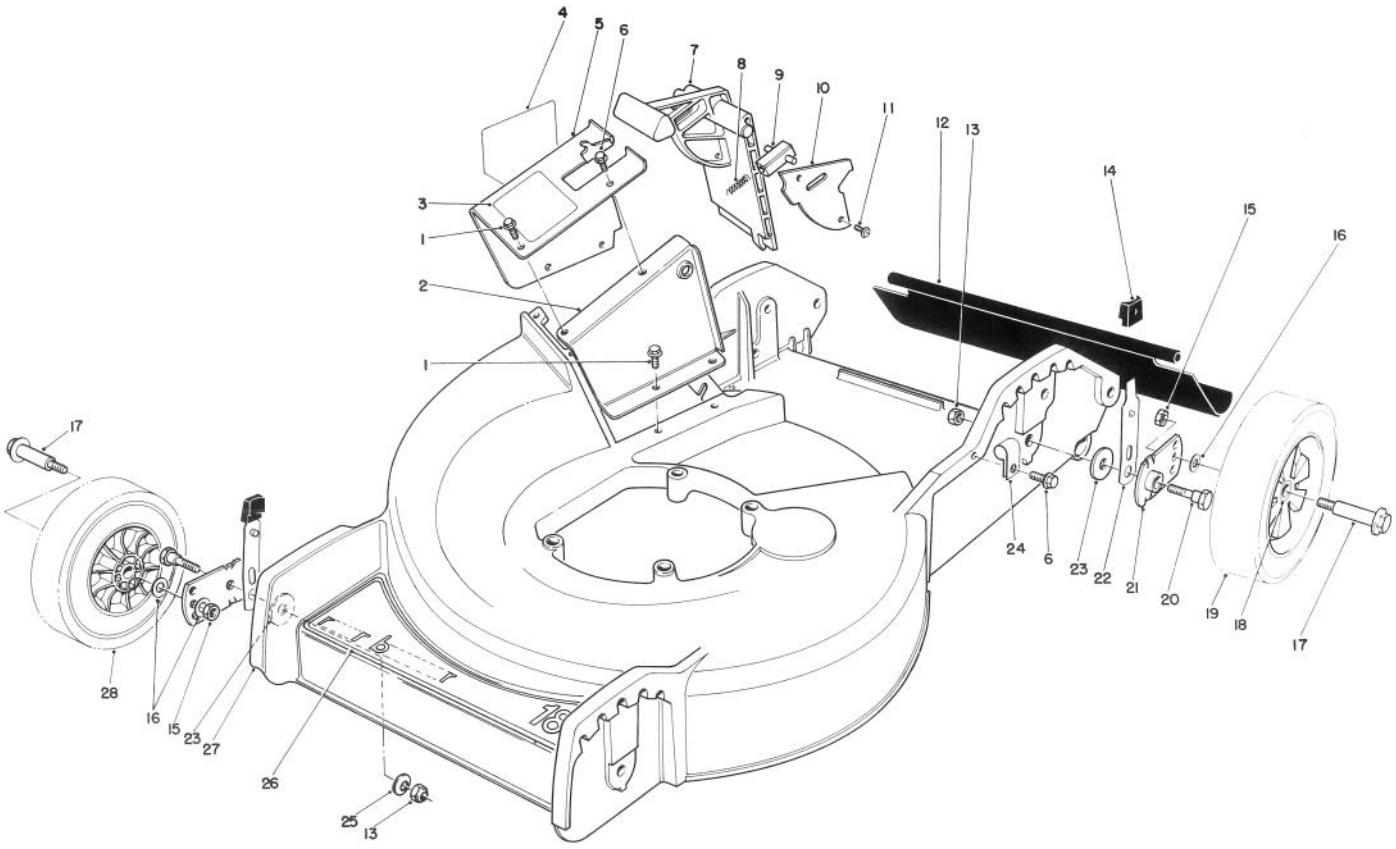

HOUSING ASSEMBLY

Ref. No.	Part No.	Description	No. Used
1	12-3270	Screw — Thread Forming Hex. Washer Hd.	6
2	49-8030	Tunnel — Inner	1
3	50-9650	Decal — Door	1
4	50-9620	Decal — Danger	1
5	11-8959	Tunnel — Outer (Incl. Ref. #3 & 4)	1
6	12-5450	Screw — Thread Forming Hex. Washer Hd.	2
7	33-0410	Door — Mulching	1
8	33-0450	Spring — Latch	1
9	47-5550	Latch — Door	1
10	33-0440	Cover — Door	1
11	32144-32	Screw — Thread Forming Hex. Washer Hd.	2
12	33-2380	Rear Safety Shield	1
13	3296-29	Nut — Lock	4

Ref. No.	Part No.	Description	No. Used
14	25-7740	Knob — Arm	4
15	52-3620	Nut — Lock	4
16	40-1940	Washer — Wheel Bolt	6
17	27-6230	Bolt — Wheel Hex. Hd.	4
18	27-6250	Bushing — Wheel	8
19	27-6200	Wheel & Tire Assembly (Incl. Ref. #18)	2
20	28-8880	Screw — Pivot Hex. Hd.	4
21	33-0400	Pivot Arm Assembly	4
22	25-8000	Spring Arm Assembly	4
23	33-0390	Washer	4
24	2412-89	Clamp — R	1
25	3290-456	Washer — Bellville	2
26	46-7920	Decal — Deck	1
27	12-1589	Housing	1
28	27-6210	Wheel & Tire Assembly (Incl. Ref. #18)	2

©The Toro Company — 1987

PRICE $1.00

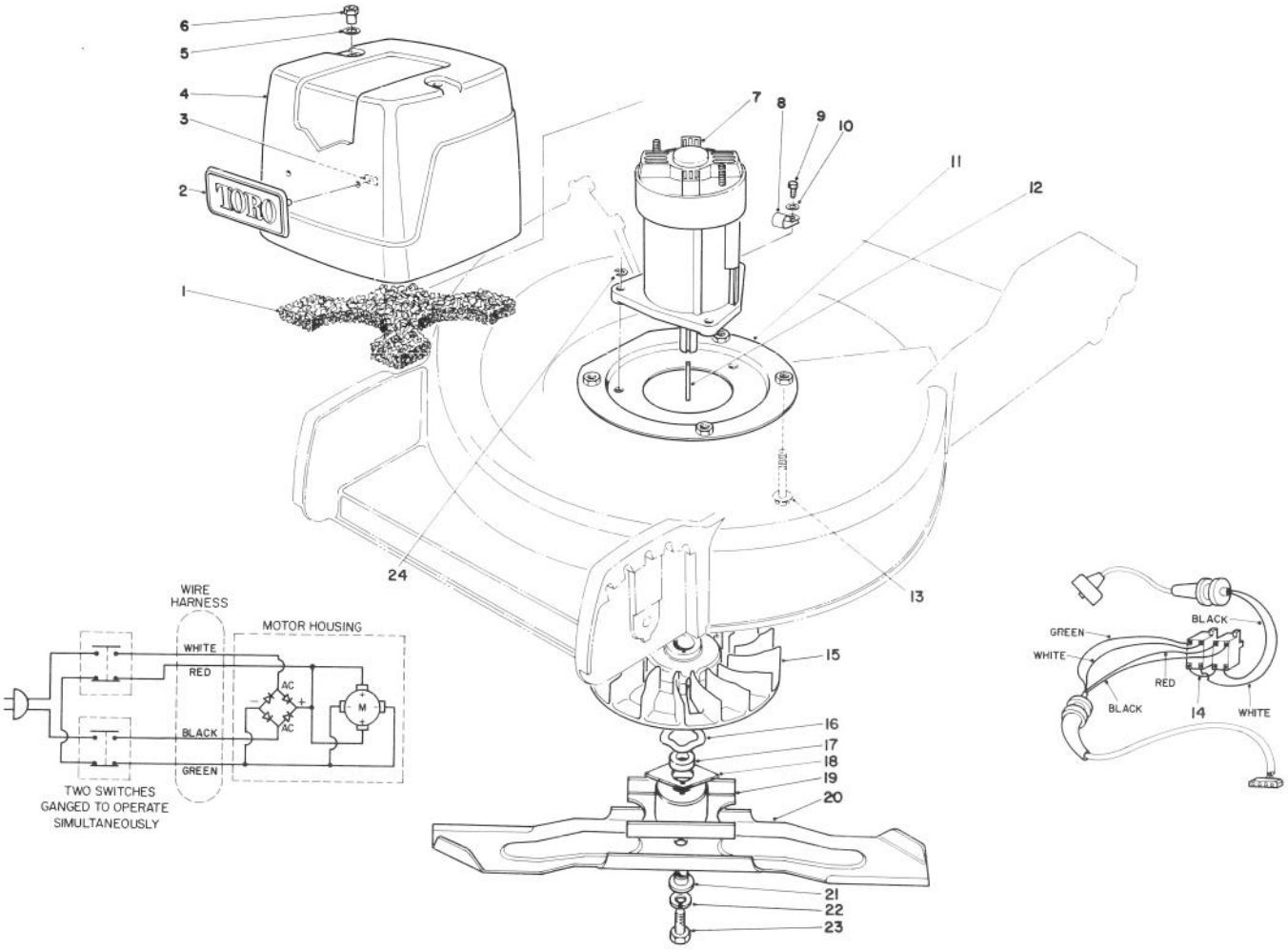

MOTOR & BLADE ASSEMBLY

Ref. No.	Part No.	Description	No. Used
1	50-9770	Filter	1
2	50-9690	Plate — Logo Toro	1
3	3290-449	Receiver — Stud	2
4	50-9760	Shroud — Motor	1
5	50-9750	Washer	2
6	50-9740	Nut — Hex.	2
7	62-5840	Motor — Electric	1
8	2412-91	Clamp — R	1
9	321-4	Screw — Cap Hd. Hex.	3
10	3256-1	Washer — Plain Flat	1
11	50-9830	Motor Mount	1
12	32150-1	Key — Square	1

Ref. No.	Part No.	Description	No. Used
13	3234-18	Screw — Cap Flange Hex. Hd.	4
14	50-9660	Wire — Brake	1
15	50-9790	Fan	1
16	3290-448	Washer — Wave	1
17	50-9780	Spacer — Blade Retainer	1
18	55-4640	Driver — Fan	1
19	20-2752	Blade Retainer	1
20	33-0490	Blade 18"	1
21	50-9890	Spacer — Blade	1
22	3253-31	Washer — Lock Spring	1
23	3210-24	Screw — Blade Hex. Hd.	1
24	3255-7	Lockwasher	2

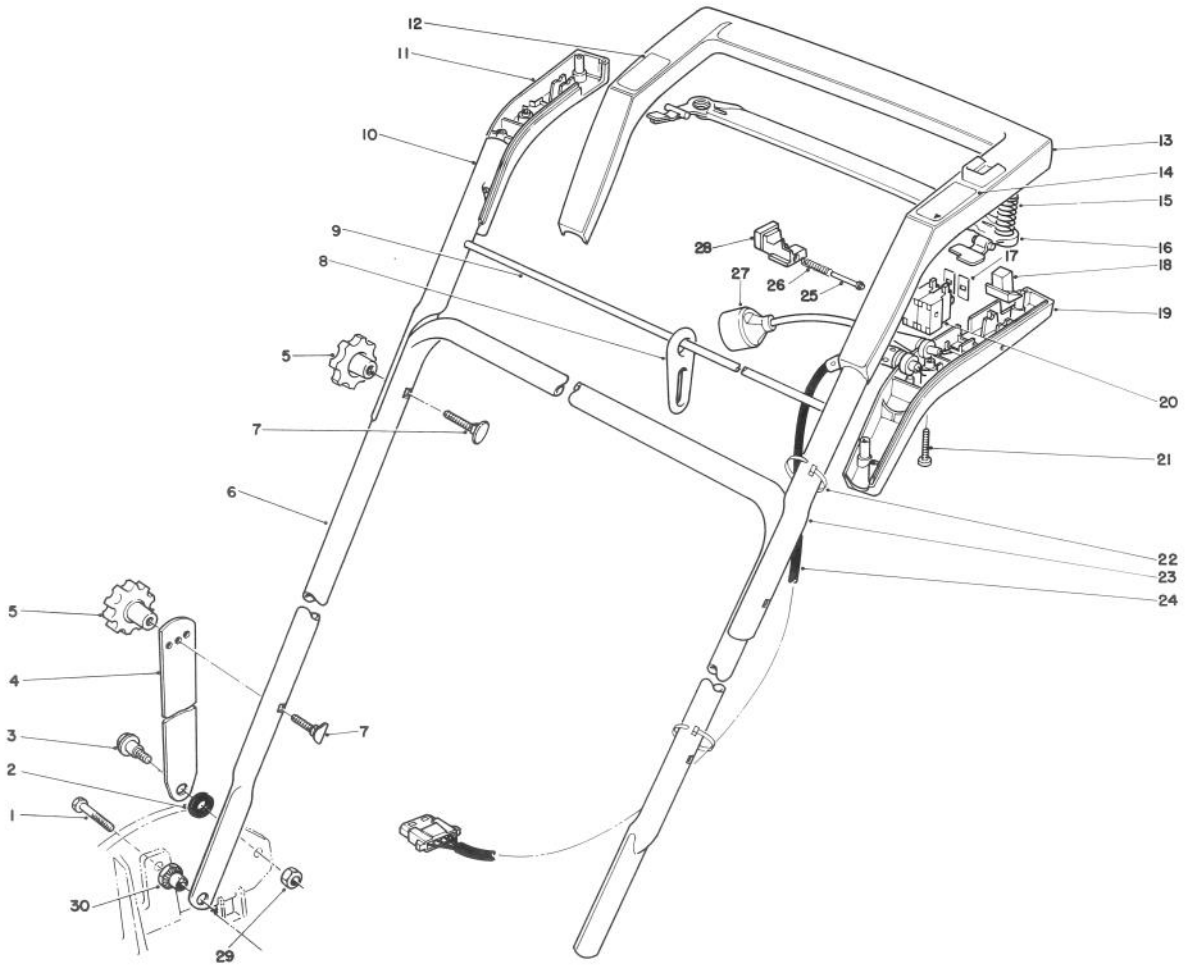

HANDLE ASSEMBLY

Ref. No.	Part No.	Description	No. Used
1	322-6	Screw — Cap Hex. Hd.	2
2	3-3287	Spacer — Handle Latch	2
3	27-7211	Screw — Shoulder Hex. Hd.	2
4	43-1370	Latch — Handle	2
5	19-4050	Knob — Handle	4
6	50-9920	Handle — Lower	1
7	17-9421	Screw — Handle	4
8	50-9860	Minder — Cord	1
9	50-9850	Rod — Minder, Cord	1
10	50-9940	Handle — Upper R. H.	1
11	54-7830	Cover — Handle Grip R. H.	1
12	50-9640	Decal — Handle, Warning	1
13	12-1099	Grip — Handle (Incl. Ref. #12 & 14)	1
14	50-9600	Decal — On-Off	1
15	34-1030	Spring — Compression	1
16	54-7810	Lever — Squeeze	1

Ref. No.	Part No.	Description	No. Used
17	55-4400	Cover — Dust	2
18	34-0320	Button — Switch	1
19	54-7820	Cover — Handle Grip L. H.	1
20	54-7800	Switch — On & Off	2
21	32104-120	Screw — Plastic, Recess Cross Pan Hd.	10
22†		Cable Tie	2
23	50-9930	Handle — Upper L. H.	1
24	50-9840	Wire Harness — Motor	1
25	50-9570	Guide — Button	1
26	50-9590	Spring — Compression	1
27	42-0771	Cord — Supply	1
28	54-7850	Button — Interlock	1
29	3296-29	Nut — Lock	2
30	12-2080	Nut — Shoulder	2
*	11-8559	Loose Parts	1

* Not Illustrated
† Obtain Locally

MOTOR BRIGGS & STRATTON MODEL NO. 748001-0334-01

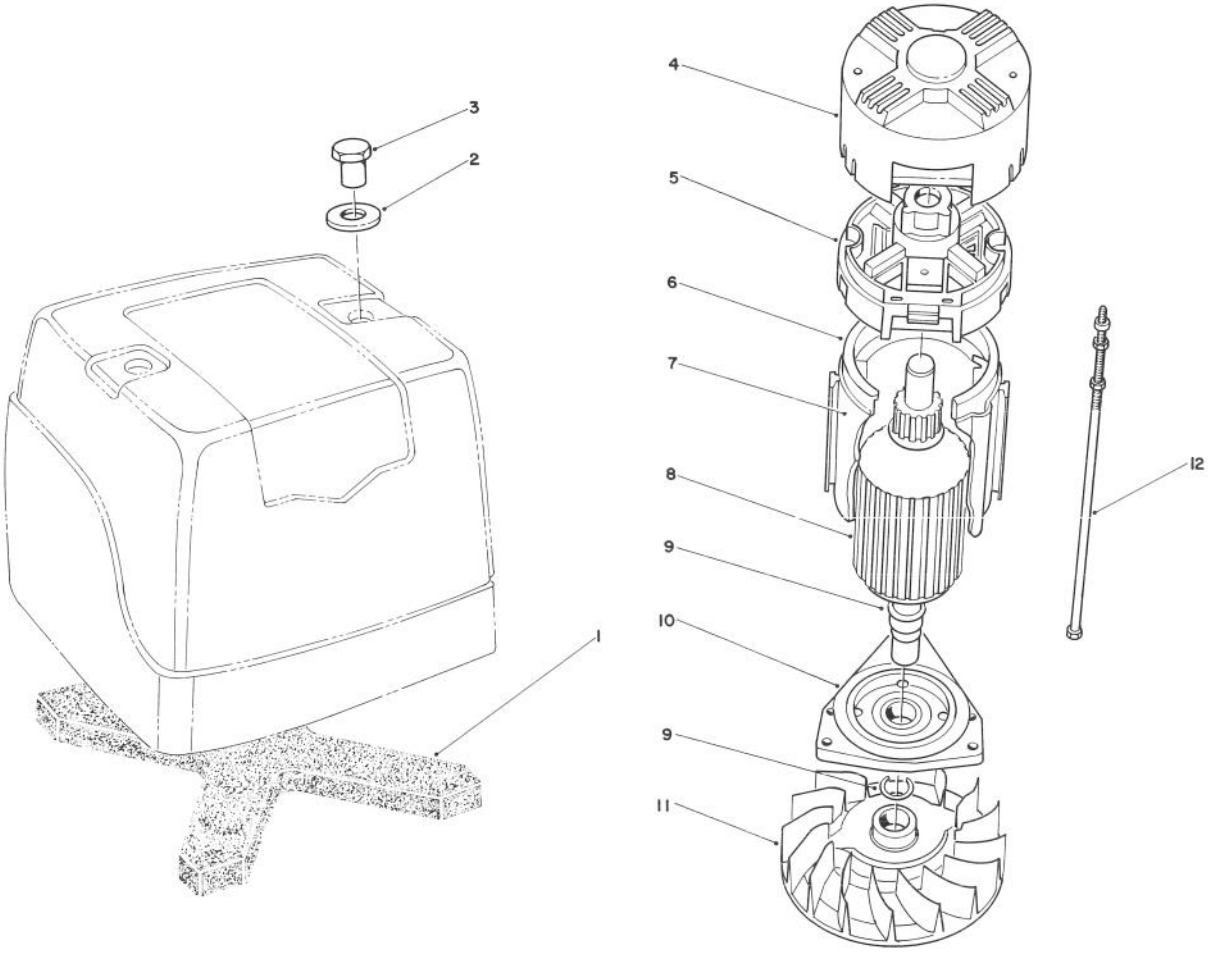

MOTOR BRIGGS & STRATTON MODEL NO. 748001-0334-01

Ref. No.	Part No.	Description	No. Used
1	271711	Filter	1
2	93852	Washer	1
3	231298	Nut — Hex.	1
4	280709	End Cap — Brush	1
5	490833	Brush Box Group (Includes: 490834 Brush & Pin Group)	1
6	399995	Housing Assembly	1
7	490830	Insulator Group — Housing	1
8	490829	Armature Group	1
9	395477	Ring Set — Retaining	1
10	394770	End Cap — Drive	1
11	280478	Fan	1
12	490832	Bolt — Thru (Includes Two Sets)	1
*	397711	Cover Group — Motor (Incl. Ref. #1-3)	1

* Not Illustrated

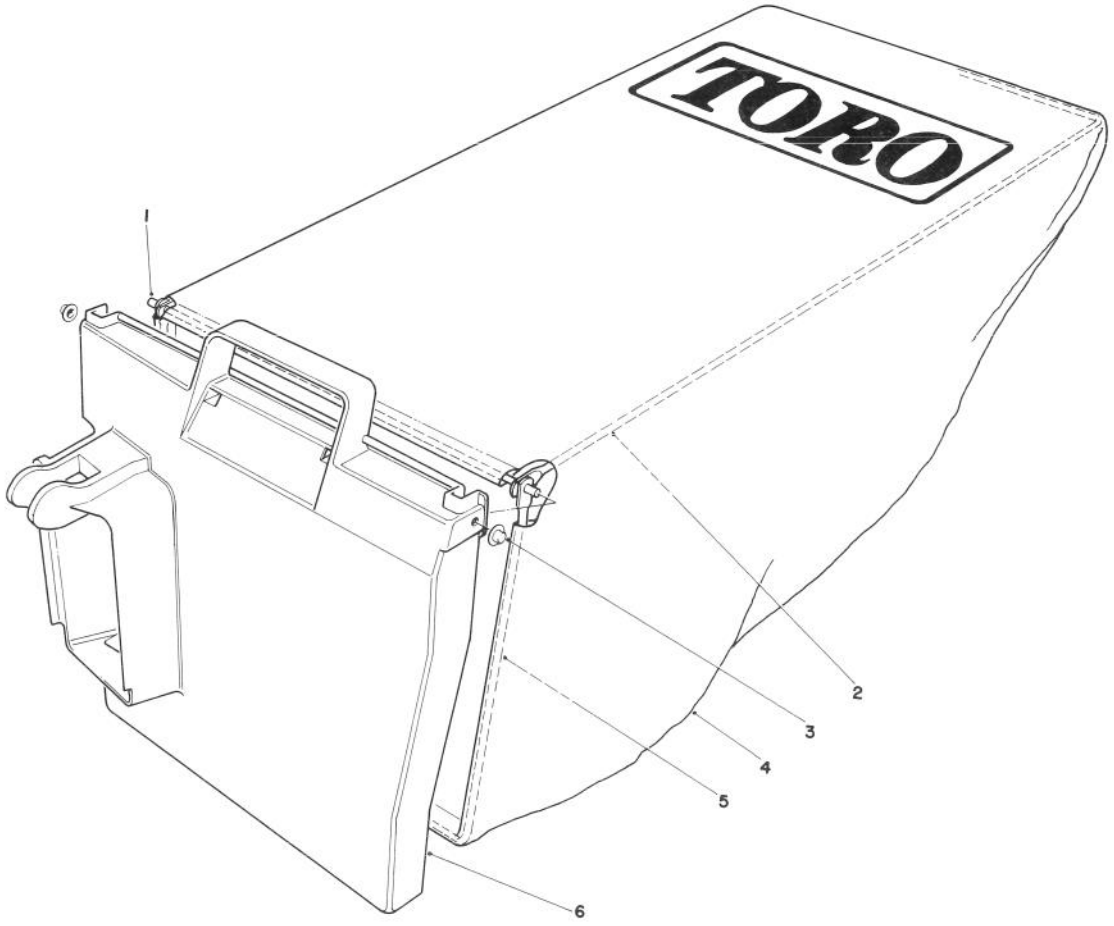

GRASS BAG ASSEMBLY NO. 11-9469

Ref. No.	Part No.	Description	No. Used
1	50-9670	Hinge	1
2	50-9880	Frame Bag — Upper	1
3	3290-422	Push Nut	2

Ref. No.	Part No.	Description	No. Used
4	56-7940	Bag	1
5	33-2240	Frame — Bag	1
6	33-2980	Door — Bag	1

PRODUCT CHANGES

In an effort to make improvements available to TORO owners as quickly as possible, minor changes are incorporated into Toro's products from time to time that do not become immediately shown in the Parts Catalog. If such a change apparently has been made in your unit, which is not reflected in your manual, see your TORO Distributor or his Authorized TORO Service Dealer for information and part numbers.

IDENTIFICATION AND ORDERING

MODEL AND SERIAL NUMBERS

The Mower has two identification numbers: a model number and a serial number. The two numbers are stamped on a decal which is located on the mower housing between the rear wheels. In any correspondence concerning the mower, supply model and serial numbers to assure that correct information and replacement parts are obtained.

To order replacement parts from an Authorized TORO Service Dealer, supply the following information:

1. Model and serial numbers of the mower.
2. Part number, description, and quantity of part(s) desired.

Note: Do not order by reference number if a parts catalog is being used; use the PART NUMBER.

The Toro Promise

A Two Year Limited Warranty

On Model 20564 — Rear Bagger

The Toro Company promises to repair your TORO Product if defective in materials or workmanship. The following time periods from the date of purchase apply:

Residential Product ..... 2 Years
Residential Products Used Commercially ..... 45 Days

The costs of parts and labor are included, but the customer pays the transportation costs. Just return any residential product to an Authorized TORO Service Dealer or TORO Distributor.

Should you feel your TORO Product is defective and wish to rely on The Toro Promise, the following procedure is recommended:

1. Contact any Authorized TORO Service Dealer, TORO Master Service Dealer, or TORO Distributor (the Yellow Pages of your telephone directory is a good reference source).
2. He will either instruct you to return the product to him or recommend another Authorized TORO Service outlet which might be more convenient.
3. Bring the product along with your original sales slip, or other evidence of purchase date, to the service dealer.
4. The servicing dealer will inspect the unit, advise you whether the product is defective and, if so, make all repairs necessary to correct the defect without extra charge to you.

If for any reason you are dissatisfied with the dealer's analysis of the defect or the service performed, you may contact us.

Write:

TORO Consumer Service Department
8111 Lyndale Avenue South
Minneapolis, Minnesota 55420

The above remedy of product defects through repair by an Authorized TORO Service Dealer is the purchaser's sole remedy for any defect.

THERE IS NO OTHER EXPRESS WARRANTY. ALL IMPLIED WARRANTIES OF MERCHANTABILITY AND FITNESS FOR USE ARE LIMITED TO THE DURATION OF THE EXPRESS WARRANTY.

Some states do not allow limitations on how long an implied warranty lasts, so the above limitation may not apply to you.

This warranty applies only to parts or components which are defective and does not cover repairs necessary due to normal wear, misuse, accidents, or lack of proper maintenance. Regular, routine maintenance of the unit to keep it in proper operating condition is the responsibility of the owner.

All warranty repairs reimbursable under The Toro Promise must be performed by an Authorized TORO Service Dealer using Toro approved replacement parts.

Repairs or attemped repairs, by anyone other than an Authorized TORO Service Account are not reimbursable under The Toro Promise. In addition, these unauthorized repair attempts may result in additional malfunctions, the correction of which is not covered by warranty.

THE TORO COMPANY IS NOT LIABLE FOR INDIRECT, INCIDENTAL OR CONSEQUENTIAL DAMAGES IN CONNECTION WITH THE USE OF THE PRODUCT INCLUDING ANY COST OR EXPENSE OF PROVIDING SUBSTITUTE EQUIPMENT OR SERVICE DURING PERIODS OF MALFUNCTION OR NON-USE.

Some states do not allow the exclusion or limitation of incidental or consequential damages, so the above limitation or exclusion may not apply to you.

This warranty gives you specific legal rights, and you may also have other rights which vary from state to state.

MAINTENANCE RECORD
