Form No. 3353–318

Fan Support Kit

2004 Reelmaster® 5000 Series Tractors

Part No. 108–6746

Installation Instructions

1. Position the machine on a level surface, lower the cutting units, stop the engine, engage the parking brake, and remove the key from the ignition switch.
2. Remove the capscrew, washers and nut securing the fan support bracket to the fan support (Fig. 1).

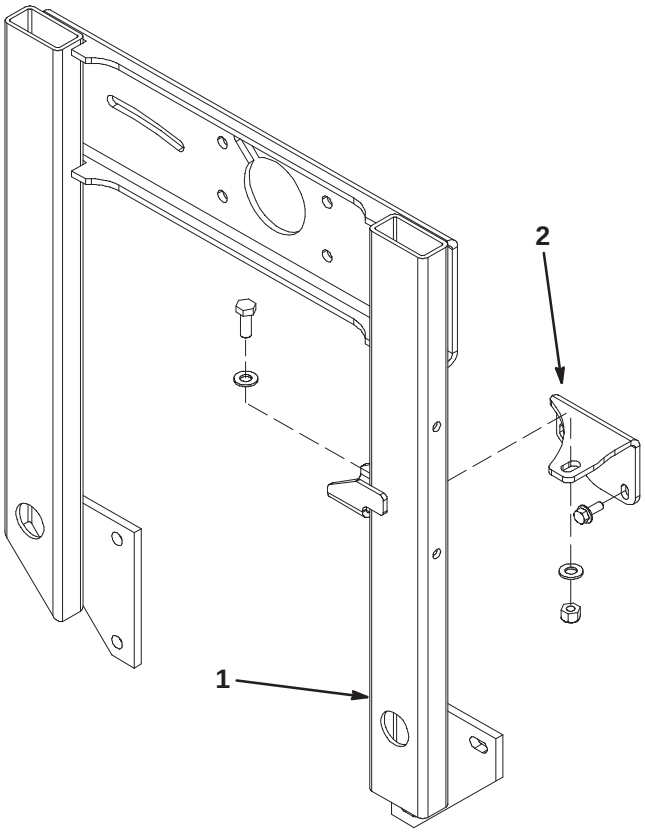

Figure 1

1. Fan support
2. Fan support bracket

3. Loosen the alternator mounting fasteners. This will allow the alternator to be moved away from the engine.
4. Remove fasteners securing the fan support bracket and the engine lift bracket to the engine (Fig. 1). Remove the fan support bracket.
5. Loosely mount the new fan support strap to the fan support with a capscrew, (2) washers, spacer and lock nut, positioning as shown in figure 2.
6. Secure the fan support strap to the engine with the fasteners previously removed.
7. Tighten all fan support strap mounting fasteners.
8. Tighten alternator mounting fasteners while adjusting the belt tension.

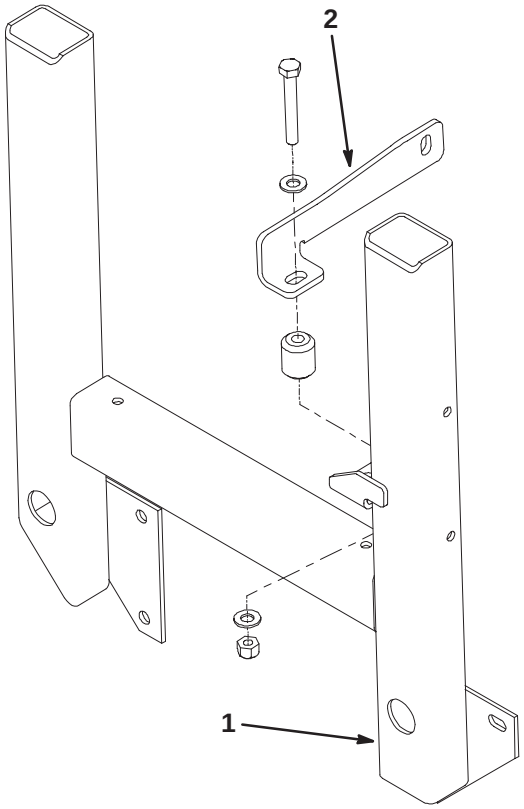

Figure 2

1. Fan support
2. Fan support strap

© 2005 by The Toro Company
8111 Lyndale Avenue South
Bloomington, MN 55420-1196

All Rights Reserved
Printed in the USA