FORM NO. 3313-218

TORO®

MODEL NO. 20574-7000001 & UP

PARTS CATALOG

18" H.P. REAR BAGGER KEY-LECTRIC

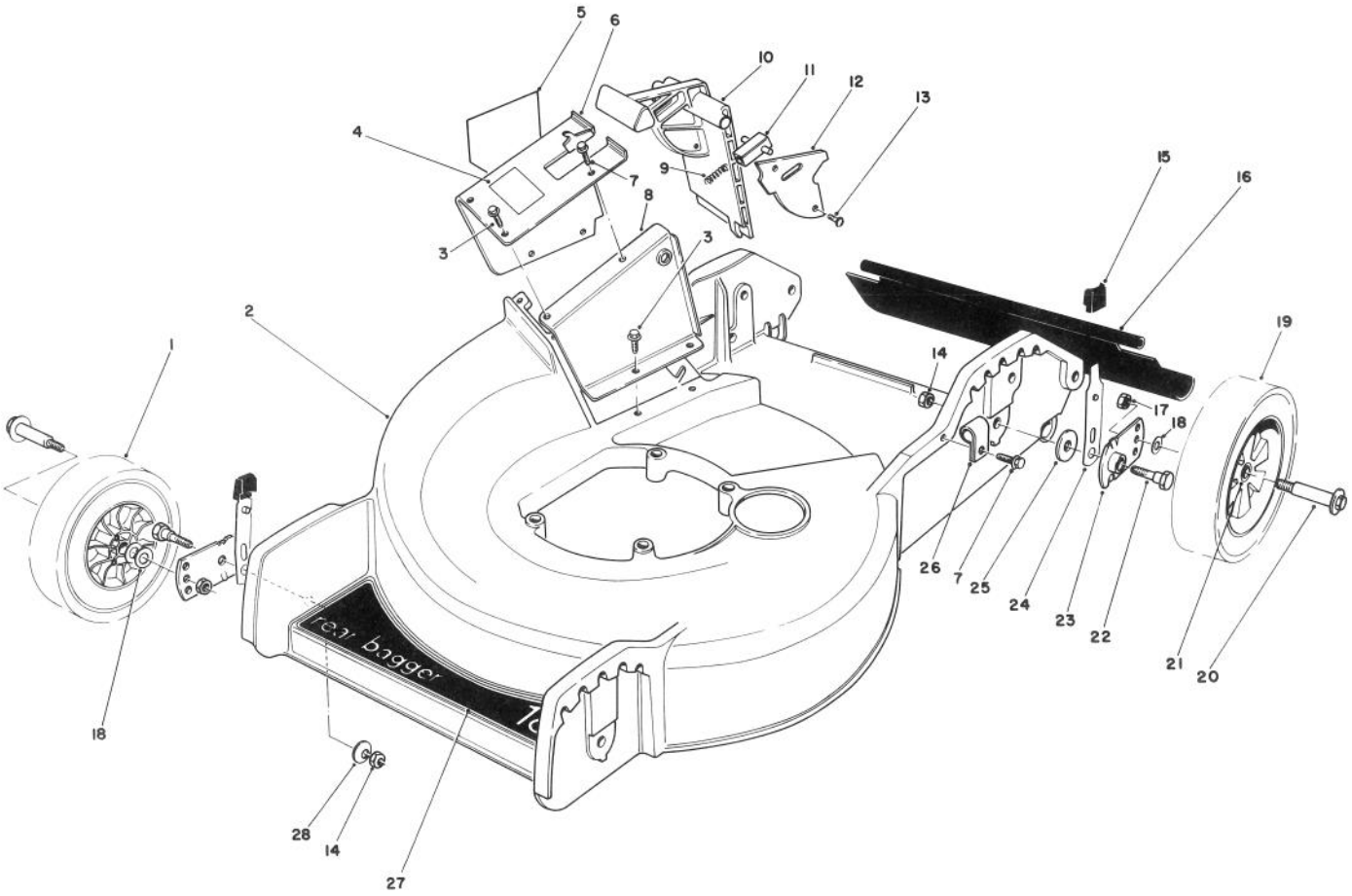

HOUSING ASSEMBLY

Ref. No.	Part No.	Description	No. Used
1	27-6210	Wheel & Tire Assembly (Incl. Ref. #21)	2
2	11-9479	Housing	1
3	12-3270	Screw — Thread Forming	6
4	47-6660	Decal — Door	1
5	39-5770	Decal — Danger	1
6	11-6839	Tunnel — Outer (Incl. Ref. #4 & 5)	1
7	12-5450	Screw — Thread Forming	2
8	49-8030	Tunnel — Inner	1
9	33-0450	Spring — Latch	1
10	33-0410	Door — Mulching	1
11	47-5550	Latch — Door	1
12	33-0440	Cover — Door	1
13	32144-32	Screw — Self Tapping Hex Hd.	2
14	3296-29	Nut — Lock	4

Ref. No.	Part No.	Description	No. Used
15	25-7740	Knob — Arm	4
16	33-2380	Rear Safety Shield	1
17	52-3620	Nut — Lock	4
18	40-1940	Washer — Wheel Bolt	6
19	27-6200	Wheel & Tire Assembly (Incl. Ref. #21)	2
20	27-6230	Bolt — Wheel Hex Hd.	4
21	27-6250	Bushing — Wheel	8
22	3-0655	Screw — Pivot Hex Hd.	4
23	33-0400	Pivot Arm	4
24	25-8000	Spring Arm	4
25	33-0390	Washer — Pivot	4
26	2412-52	Clamp — Conduit	1
27	46-7920	Decal — Deck	1
28	3290-456	Washer — Belleville	2
*	12-2349	Loose Parts	1

*Not Illustrated

PRICE $1.00

© The Toro Company — 1987

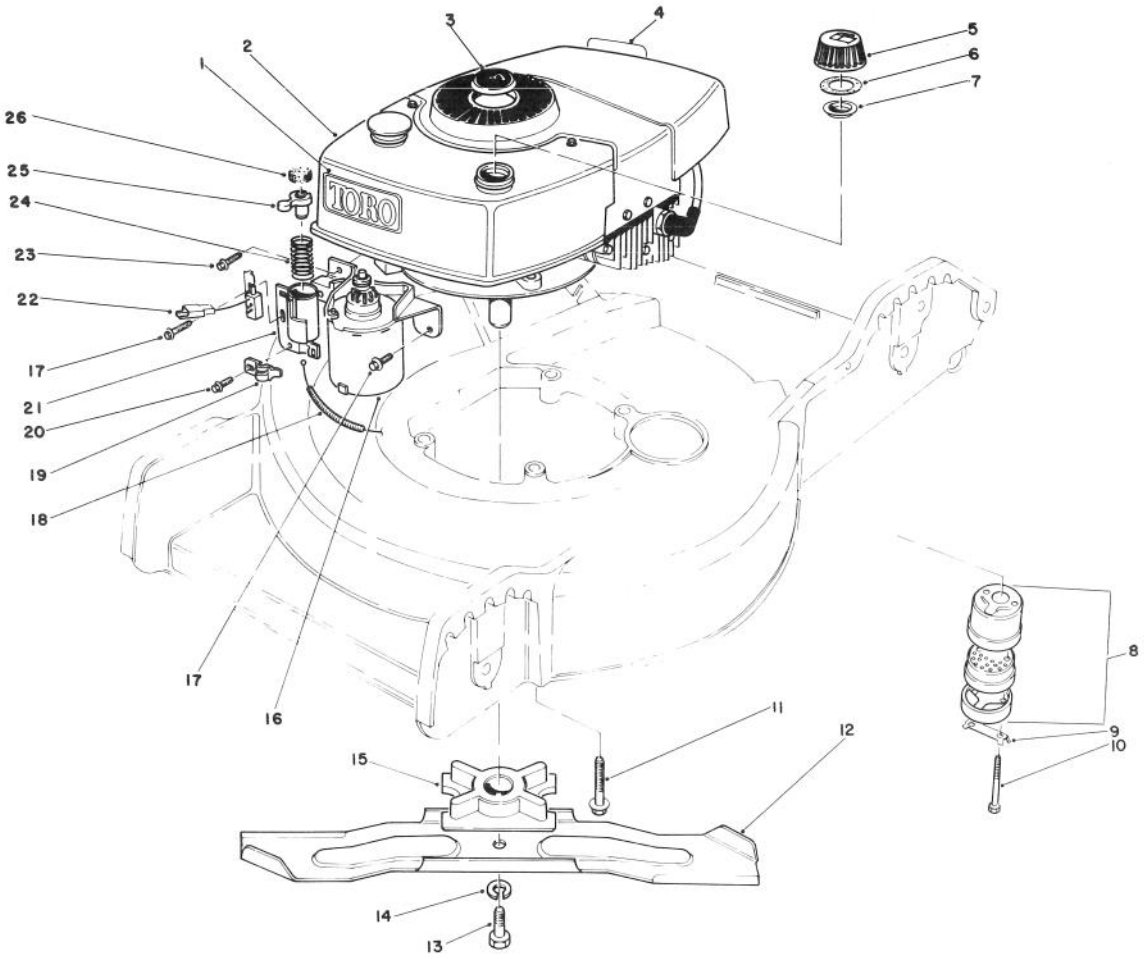

ENGINE ASSEMBLY

Ref. No.	Part No.	Description	No. Used
1	44-0510	Decal — Toro	1
2		Engine	1
3	38-1480	Plug — Button	1
4	37-1580	Decal — Maintenance	1
5	42-0682	Gas Cap Assembly (Incl. Ref. # 6 & 7)	1
6	2210-144	Gasket	1
7	2210-143	Baffle	1
8	5-4769	Muffler Assembly (Incl. Ref. # 9 & 10)	1
9	3-5094	Locking Clip	1
10	321-20	Screw — Cap Hex Hd.	2
11	11-0581	Screw — Engine Hex Hd.	3
12	33-0490	Blade	1
13	3-5246	Screw — Blade Hex Hd.	1
14	3253-22	Washer — Lock	1

Ref. No.	Part No.	Description	No. Used
15	49-7890	Retainer — Blade	1
16	49-4210	Starter Motor	1
17	12-3270	Screw — Special Thread Forming	2
18	43-4531	Cable — Brake	1
19	46-6530	Clamp — Cable	1
20	12-5450	Screw — Self Tapping	1
21	46-5840	Tube Assembly	1
22	47-6530	Switch — Push Button	1
23	11-9760	Screw — Special Thread Forming	1
24	47-2180	Spring — Compression	1
25	46-5820	Plunger	1
26	56-8000	Pad — Friction	1
*	39-5930	Spark Arrestor Muffler (Optional) (Incl. Ref. #9 & 10)	1

*Not Illustrated

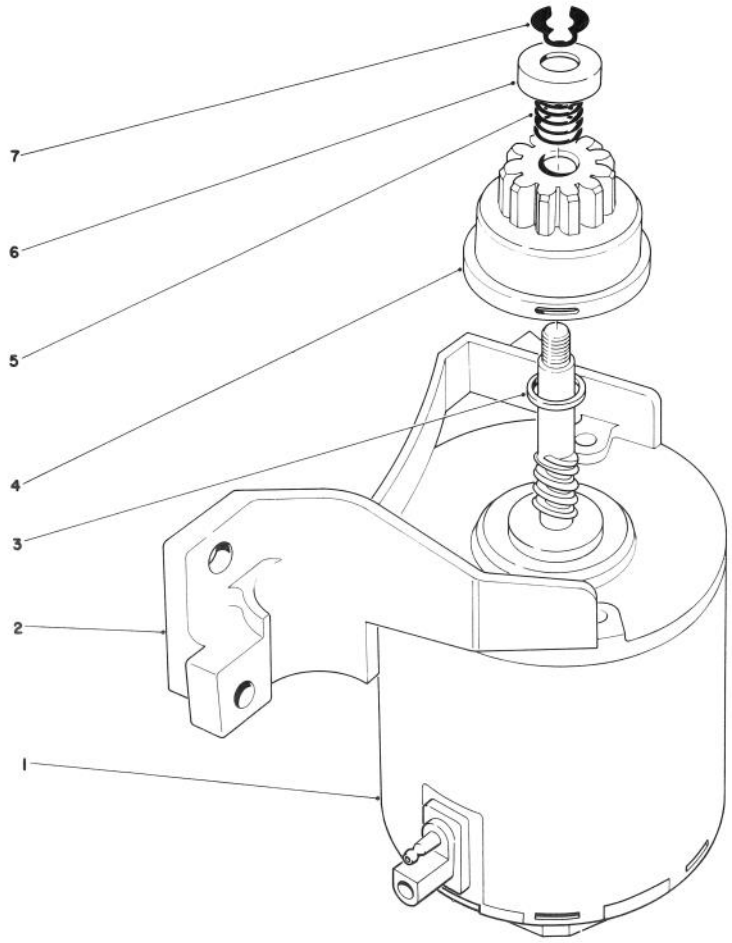

STARTER ASSEMBLY

Ref. No.	Part No.	Description	No. Used
1	218-543	End Frame w/Brushes & Electrical Terminal	1
2	218-541	End Frame w/Bushing	1
3	23-9591	Spacer	1
4	43-4370	Pinion Assembly	1
5	44-0500	Spring — Compression	1
6	49-2170	Pinion Stop	1
7	32151-47	Ring — Retaining Ext.	1
*	49-4210	Starter Assy. (Incl. Ref. #1-7)	1

*Not Illustrated

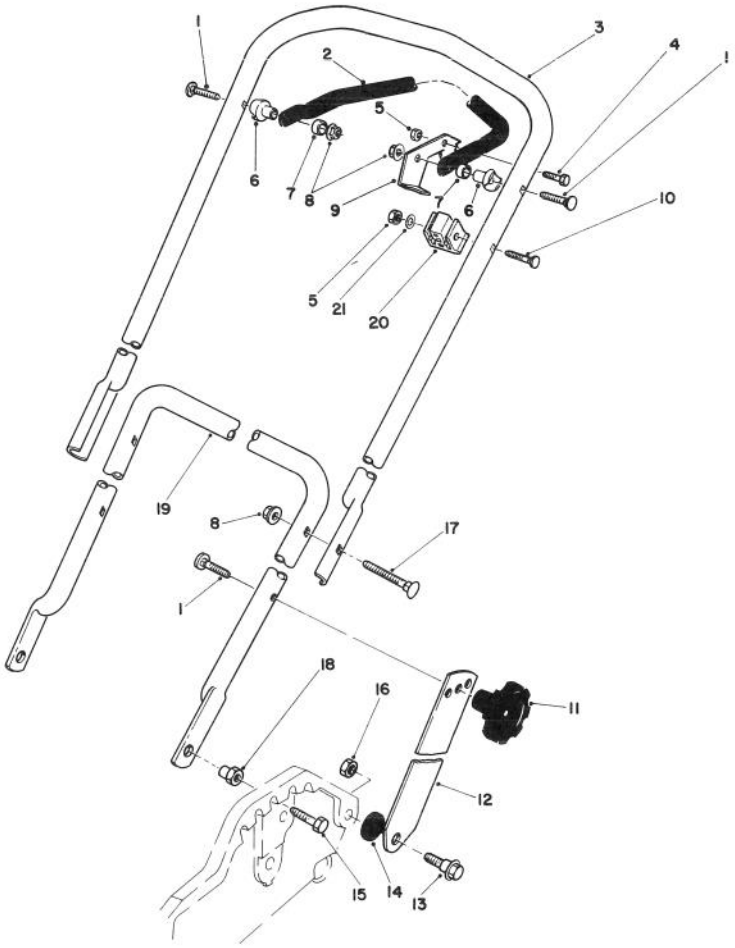

HANDLE ASSEMBLY

Ref. No.	Part No.	Description	No. Used
1	17-9421	Screw — Handle	4
2	46-9900	Bar — Control	1
3	52-7420	Handle — Upper	1
4	321-3	Hex. Hd. Capscrew	1
5	3296-42	Locknut	2
6	49-1630	Support — Spacer	2
7	256-276	Spacer — Nylon	2
8	3296-58	Locknut — Flange	4
9	46-7950	Lever — Control	1
10	46-6434	Screw — Handle	1
11	19-4050	Knob — Handle	2

Ref. No.	Part No.	Description	No. Used
12	43-1370	Latch — Handle	2
13	27-7210	Screw — Shoulder	2
14	3-3287	Spacer — Handle Latch	2
15	322-5	Hex. Hd. Capscrew	2
16	3296-29	Locknut	2
17	17-9424	Screw — Handle	2
18	12-2080	Nut — Shoulder	2
19	50-9920	Handle — Lower	1
20	46-6980	Support — Cable	1
21	3256-22	Washer	1

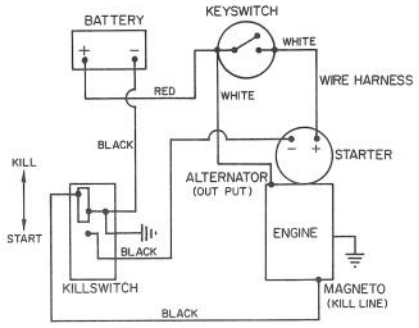

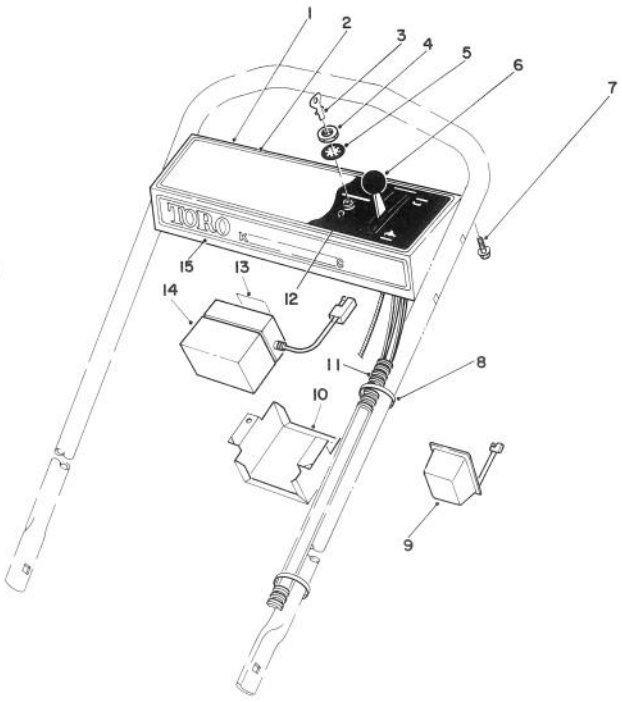

CONTROL PANEL ASSEMBLY

Ref. No.	Part No.	Description	No. Used
1	11-6919	Control Panel (Incl. Ref. #2)	1
2	46-7440	Decal — Instructions	1
3	218-412	Key — Ignition	1
4	218-461	Nut — Hex	1
5	3254-5	Lockwasher	1
6	46-6010	Control Throttle (Bend #1) Sheath Lg. 41½" Lg.) (Wire Lg. 2" Lg.)	1
7	32104-76	Screw — Self Tapping Acorn Hd.	5

Ref. No.	Part No.	Description	No. Used
8	3290-378	Cable Tie	3
9	6-9780	Battery Charger	1
10	60-9000	Retainer — Battery	1
11	46-5810	Harness Wire	1
12	46-5780	Switch — Starter (Incl. Ref. #4 & 5)	1
13	60-9250	Decal	1
14	60-9190	Battery Assembly	1
15	47-4600	Decal — Toro	1

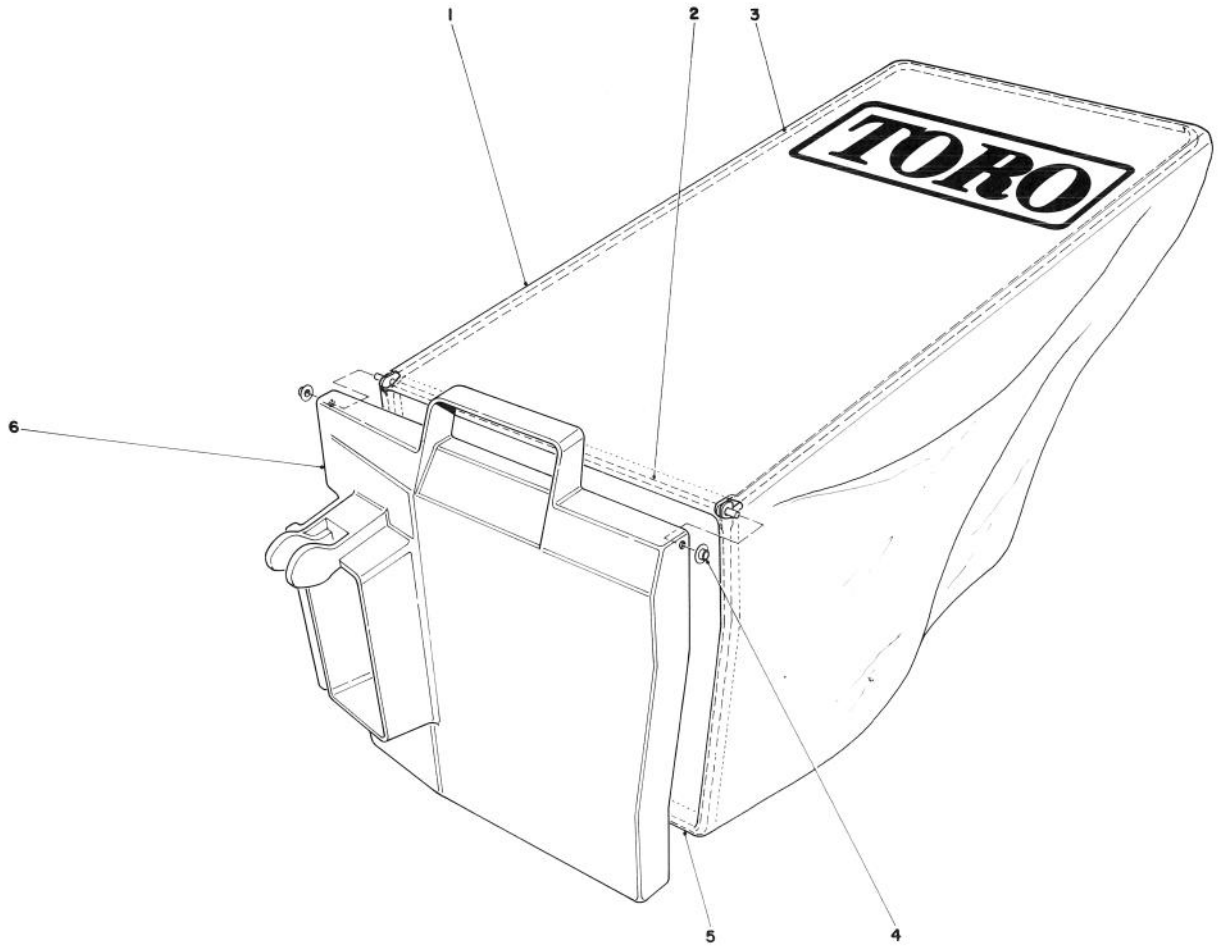

GRASS BAG ASSEMBLY NO. 11-9469

Ref. No.	Part No.	Description	No. Used
1	56-7940	Bag	1
2	50-9670	Hinge	1
3	50-9880	Frame — Bag, Upper	1
4	3290-422	Push Nut Washer Cap	2

Ref. No.	Part No.	Description	No. Used
5	33-2240	Frame Bag	1
6	33-2980	Door — Bag	1

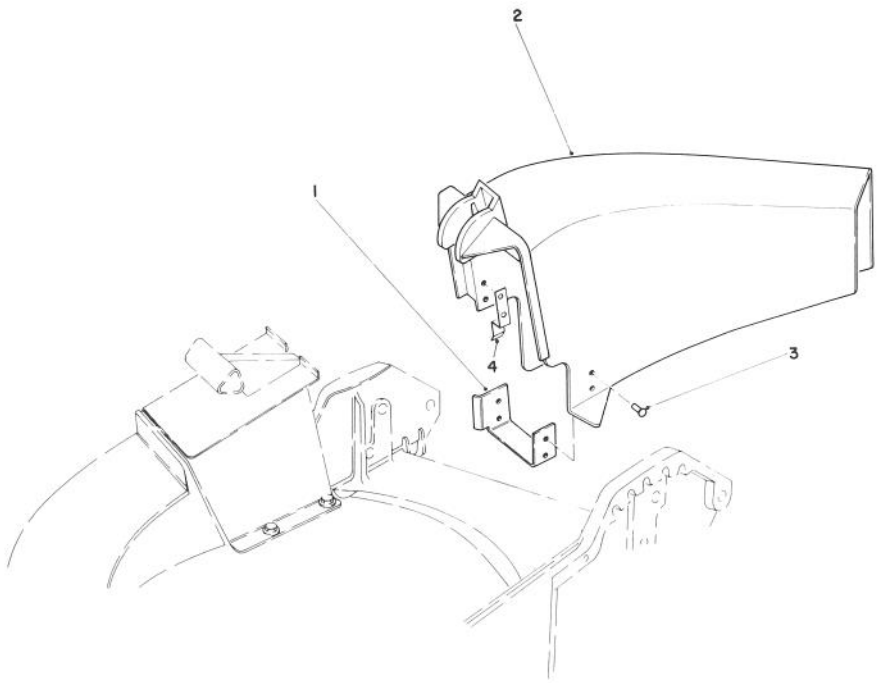

SIDE DISCHARGE KIT NO. 59107 (Optional)

Ref. No.	Part No.	Description	No. Used
1	44-2620	Chute Bracket	1
2	44-2610	Chute Discharge	1

Ref. No.	Part No.	Description	No. Used
3	3295-29	Rivet	6
4	46-6400	Tab Chute	1

ENGINE TECUMSEH MODEL NO. TNT 100 10097E

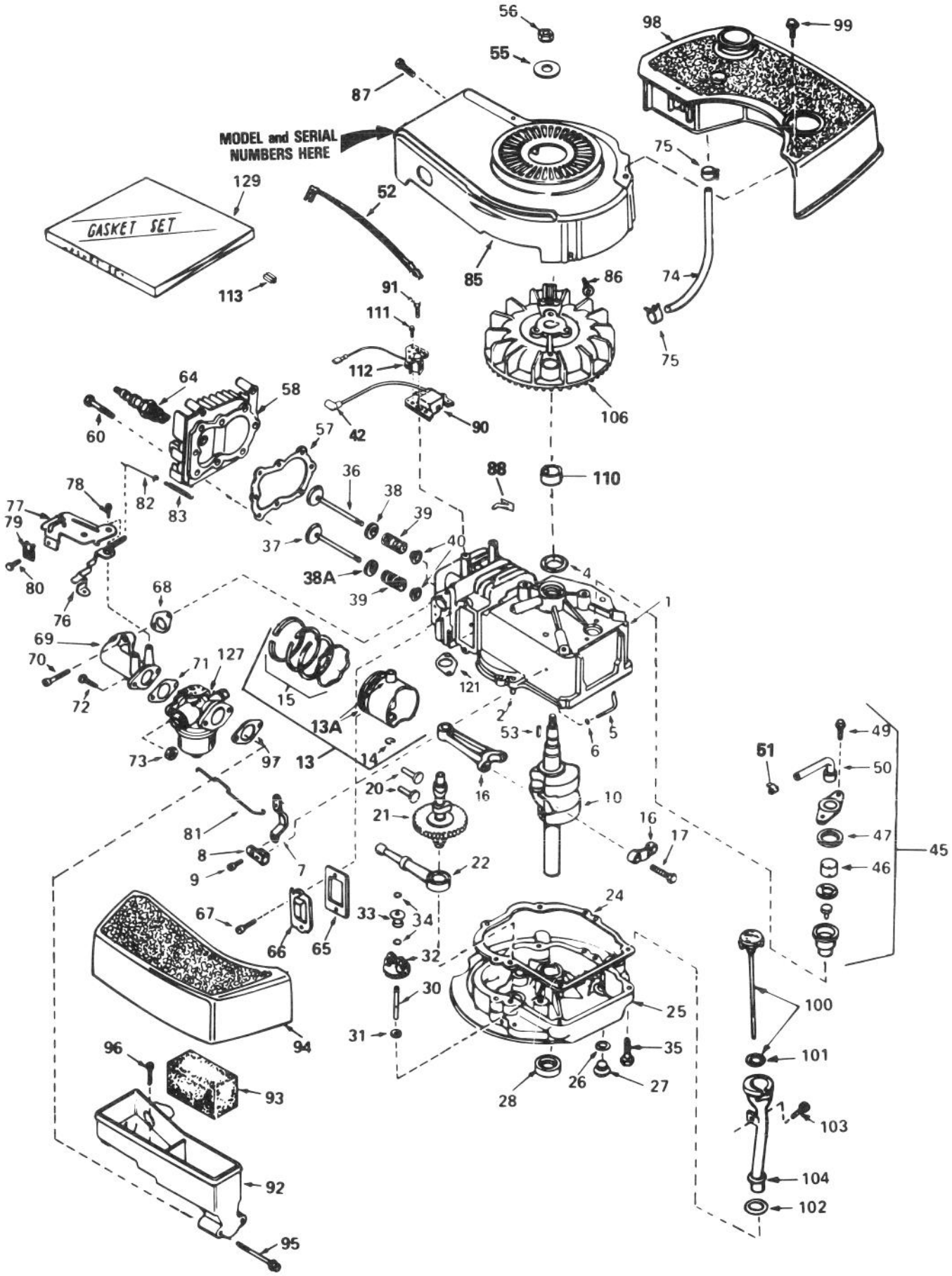

ENGINE TECUMSEH MODEL NO. TNT 100 10097E

Ref. No.	Part No.	Description	No. Used
1	34429A	Cylinder Assembly (Incl. Ref. #2 & 4	1
2	26727	Pin — Dowel	2
4	32600	Seal — Oil	1
5	30589	Rod — Governor (Incl. Ref. #6)	1
6	28277	Washer — Flat	1
7	32651	Lever — Governor	1
8	31335	Clamp — Governor Lever	1
9	650548	Screw — Hex Washer Hd.	1
10	34440	Crankshaft	1
13	34851	Piston — Pin & Ring Assy. (Std.) (Incl. Ref. #13A, 14 & 15)	1
13	34852	Piston — Pin & Ring Assembly (.010 oversize) (Incl. Ref. #13A, 14 & 15)	1
13	34853	Piston — Pin & Ring Assembly (.020 oversize) (Incl. Ref. #13A, 14 & 15)	1
13A	32603B	Piston & Pin Assembly (Std.) (Incl. Ref. #14)	1
13A	32604B	Piston & Pin Assembly (.010 oversize) (Incl. Ref. #14)	1
13A	32605B	Piston & Pin Assembly (.020 oversize) (Incl. Ref. #14)	1
14	20381	Ring — Piston Pin Retaining	2
15	34854	Ring Set — Piston (Std.)	1
15	34855	Ring Set — Piston (.010 oversize)	1
15	34856	Ring Set — Piston (.020 oversize)	1
16	30963B	Rod Assembly — Connecting (Incl. Ref. #17)	1
17	32610A	Bolt — Connecting Rod	2
20	27241	Lifter — Valve	2
21	33553	Camshaft (Mechanical Compression Release)	1
22	29914	Pump Assembly — Oil	1
24	35261*	Gasket — Mounting Flange	1
25	34831	Flange Assembly — Mounting (Incl. Ref. #26, 27, 28 & 30)	1
26*	28833	Gasket — Oil Drain Plug	1
27	27244	Plug — Oil Drain	1
28	26208	Seal — Oil	1
30	30574	Shaft — Mechanical Governor	1
31	30590A	Washer — Flat	1
32	30591	Gear Assembly — Governor (Incl. Ref. #31)	1
33	30588A	Spool — Governor	1
34	29193	Ring — Retaining	2
35	650488	Screw — Hex Hd.	6
36	29314B	Valve — Intake (Std.) (Incl. Ref. #40)	1
36	29315C	Valve — Intake (1/32" oversize) (Incl. Ref. #40)	1
37	29313C	Valve — Exhaust (Std.) (Incl. Ref. #40)	1
37	29315C	Valve — Exhaust (1/32" oversize) (Incl. Ref. #40)	1
38	35390	Seal Assembly — Intake Valve	1
38A	31671	Cap — Upper Valve Spring (Exhaust)	1
39	31672	Spring — Valve	2
40	31673	Cap — Lower Valve Spring	2
42	610118	Cover — Spark Plug	1
45	34214A	Breather Assembly (Incl. Ref. #46 thru 51)	1
46	33734	Element — Breather	1
47*	33735	Gasket — Breather	1
49	30200	Screw — Hex Washer Hd. Self-Tap	2
50	33886	Tube — Breather	1
51	33887	Clip — Breather Tube	1
52	35020	Wire — Ground	1
53	611004	Key — Flywheel	1
55	650815	Washer — Belleville	1
56	650816	Nut — Flywheel	1
57*	33015	Gasket — Cylinder Head	1
58	34342	Head — Cylinder	1
60	6021A	Screw — Hex Flange Hd.	8
64	35078	Plug — Spark (Autolite 458, Champion J-19LM or equivalent)	1
65*	27234	Gasket — Valve Spring Cover	1
66	32755	Cover — Valve Spring Box	1
67	650128	Screw — Fil. Hd.	2
68*	34690	Gasket — Intake Pipe	1
69	33004A	Pipe — Intake (Incl. Ref. #68)	1
70	650451	Screw — Hex Hd.	2
71*	31688	Gasket — Carburetor	1
72	6201	Screw — Hex Hd.	2
73	29752	Nut & Lockwasher Assembly	2
74	30705	Line — Fuel	1
75	26460	Clamp — Fuel Line	2
76	34310	Lever — Control	1
77	33889A	Control Assembly — Speed (Incl. Ref. #76 & 78)	1
78	650804	Screw — Hex Washer Hd. Shoulder, Self-Tap	1
79	27793	Clip — Conduit	1
80	28942	Screw — Hex Washer Hd.	1
81	34336	Link — Governor-to-Throttle	1
82	33151	Link — Governor Spring	1
83	33890	Spring — Governor	1
85	33891B	Housing — Blower	1
86	650561	Screw — Hex Washer Hd.	2
87	30200	Screw — Hex Washer Hd. Self-Tap	2
88	29443	Clip — Spring	1
90	34443A	Solid State Assembly	1
91	650814	Screw — Hex Hd.	2
92	33895	Body — Air Cleaner	1
93	33896	Filter — Air Cleaner	1
94	33897	Cover — Air Cleaner	1
95	650762	Screw — Fil. Hd.	2
96	650804	Screw — Hex Washer Hd. Shoulder, Self-Tap	1
97*	33051	Gasket — Air Cleaner	1
98	33904B	Tank — Fuel	1
99	28763	Screw — Hex Washer Hd.	2
100	33894A	Dipstick — Oil (Incl. Ref. #101)	1
101	33590	"O" Ring — Dipstick	1
102	34265	Gasket — Fill Tube	1
103	650562	Screw — Hex Washer Hd.	1
104	34380	Tube — Oil Fill	1
106	611050	Flywheel	1
110	34080	Spacer — Flywheel Key	1
111	650767	Screw — Hex Hd.	2
112	34990	Alternator Coil Assembly	1
113	34977	Connector — Body	1
121*	30081	Gasket — Exhaust	1
127	632050A	Carburetor (Incl. Ref. #71)	1
129	33906A	Gasket Set (Incl. Items Marked *)	1

*Indicates parts included in Gasket Set, Ref. No. 129.

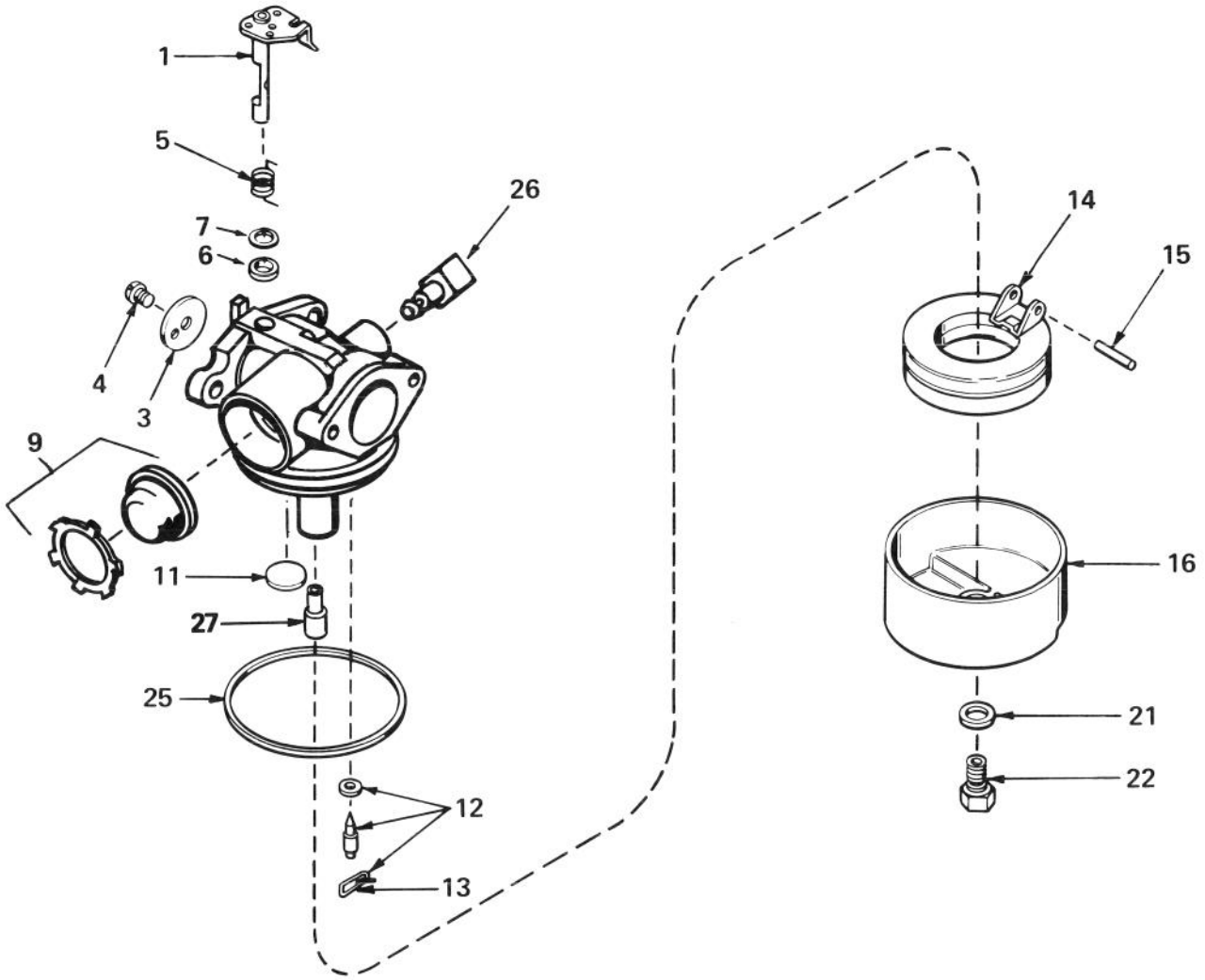

CARBURETOR NO.632050A

Ref. No.	Part No.	Description	No. Used
1	631615	Shaft & Lever Assy., Throttle	1
3	631616	Shutter — Throttle	1
4	650506	Screw — Throttle Shutter	1
5	631767	Spring — Return	1
6	631971	Seal — Dust	1
7	631184	Washer — Flat	1
9	632047	Bulb & Retainer — Primer	1
11	631027	Plug — Welch	1
12	631021	Inlet Needle — Seat & Clip Assembly (Incl. Ref. #13)	1

Ref. No.	Part No.	Description	No. Used
13	631022	Clip — Inlet Needle	1
14	632019	Float — Carburetor	1
15	631024	Shaft — Float	1
16	631700	Bowl — Float	1
21	631334	Gasket — Bowl-to-Body	1
22	631935	Nut — Float Bowl	1
25	631028	Gasket — Bowl-to-Body	1
26	631807	Fitting — Fuel Inlet	1
27	632158	Spacer	1

PRODUCT CHANGES

In an effort to make improvements available to TORO owners as quickly as possible, minor changes are incorporated into Toro's products from time to time that do not become immediately shown in the Parts Catalog. If such a change apparently has been made in your unit, which is not reflected in your manual, see your TORO Distributor or his Authorized TORO Service Dealer for information and part numbers.

IDENTIFICATION AND ORDERING

MODEL AND SERIAL NUMBERS

The Mower has two identification numbers: a model number and a serial number. The two numbers are stamped on a decal which is located on the mower housing between the rear wheels. In any correspondence concerning the mower, supply model and serial numbers to assure that correct information and replacement parts are obtained.

To order replacement parts from an Authorized TORO Service Dealer, supply the following information:

1. Model and serial number of the mower.
2. Part number, description, and quantity of part(s) desired.

Note: Do not order by reference number if a parts catalog is being used; use the PART NUMBER.

The Toro Promise

A Two Year Limited Warranty
On All Gasoline Powered Consumer Products

The Toro Company promises to repair your TORO Product if defective in materials or workmanship. The following time periods from the date of purchase apply:

Residential Product ..... 2 Years
Residential Products Used Commercially... 45 Days

The costs of parts and labor are included, but the customer pays the transportation costs. Just return any residential product to an Authorized TORO Service Dealer or TORO Distributor.

Should you feel your TORO Product is defective and wish to rely on The Toro Promise, the following procedure is recommended:

1. Contact any Authorized TORO Service Dealer, TORO Master Service Dealer, or TORO Distributor (the Yellow Pages of your telephone directory is a good reference source).
2. He will either instruct you to return the product to him or recommend another Authorized TORO Service outlet which might be more convenient.
3. Bring the product along with your original sales slip, or other evidence of purchase date, to the service dealer.
4. The servicing dealer will inspect the unit, advise you whether the product is defective and, if so, make all repairs necessary to correct the defect without extra charge to you.

If for any reason you are dissatisfied with the dealer's analysis of the defect or the service performed, you may contact us.

Write:

TORO Consumer Service Department
8111 Lyndale Avenue South
Minneapolis, Minnesota 55420

The above remedy of product defects through repair by an Authorized TORO Service Dealer is the purchaser's sole remedy for any defect.

THERE IS NO OTHER EXPRESS WARRANTY. ALL IMPLIED WARRANTIES OF MERCHANTABILITY AND FITNESS FOR USE ARE LIMITED TO THE DURATION OF THE EXPRESS WARRANTY.

Some states do not allow limitations on how long an implied warranty lasts, so the above limitation may not apply to you.

This warranty applies only to parts or components which are defective and does not cover repairs necessary due to normal wear, misuse, accidents, or lack of proper maintenance. Regular, routine maintenance of the unit to keep it in proper operating condition is the responsibility of the owner.

All warranty repairs reimbursable under The Toro Promise must be performed by an Authorized TORO Service Dealer using Toro approved replacement parts.

Repairs or attemped repairs by anyone other than an Authorized TORO Service Account are not reimbursable under The Toro Promise. In addition, these unauthorized repair attempts may result in additional malfunctions, the correction of which is not covered by warranty.

THE TORO COMPANY IS NOT LIABLE FOR INDIRECT, INCIDENTAL OR CONSEQUENTIAL DAMAGES IN CONNECTION WITH THE USE OF THE PRODUCT INCLUDING ANY COST OR EXPENSE OF PROVIDING SUBSTITUTE EQUIPMENT OR SERVICE DURING PERIODS OF MALFUNCTION OR NON-USE.

Some states do not allow the exclusion or limitation of incidental or consequential damages, so the above limitation or exclusion may not apply to you.

This warranty gives you specific legal rights, and you may also have other rights which vary from state to state.

COUNTRIES OTHER THAN THE UNITED STATES OR CANADA

Customers who have purchased TORO products exported from the United States or Canada should contact their TORO Distributor (Dealer) to obtain guarantee policies for your country, province or state. If for any reason you are dissatisfied with your Distributor's service or have difficulty obtaining guarantee information, contact the TORO importer. If all other remedies fail, you may contact us at The Toro Company.

Compliance with Radio Interference Regulations Certified.
Certifie Conforme au Reglement sur le Brouillage Radioelectrique.

MAINTENANCE RECORD

Date	Hours Used	Oil Change	Air Cleaner Service	Sharpen Blade	Winter Storage	Spring Service	Spark Plug Gap