Form No. 3353–326 Rev A

Driveshaft Replacement Kit

Groundsmaster® 580–D

Part No. 108–8045

Installation Instructions

1. Remove the bolts and nuts securing the driveshaft to the pump shaft. Discard the bolts and nuts.
2. Remove the capscrews and washers securing the drive shaft to the engine. Retain these capscrews and washers.
3. Mount the new driveshaft to the engine with the capscrews and washers previously removed (Fig. 1). Torque the capscrews to 38–42 ft–lbs.

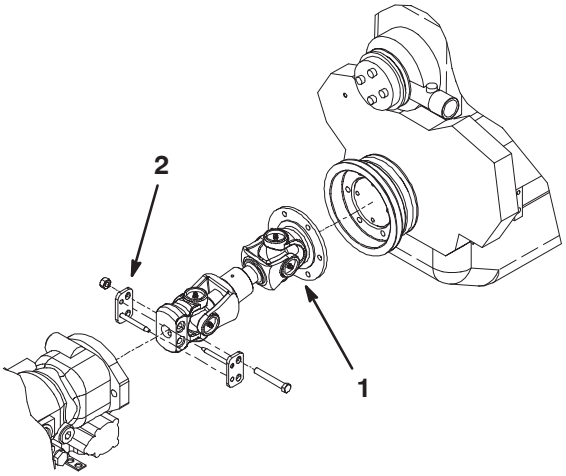

Figure 1

1. Driveshaft
2. Driveshaft keeper

4. Insert the drive shaft onto the splined pump shaft and loosely secure with driveshaft keepers, bolts and nuts as shown in figure 1. Do not tighten.
5. Pull the driveshaft away from the pump to provide clearance between the pump pilot surface and the driveshaft keeper surface (Fig. 2).
6. Tighten the driveshaft keeper nuts to 73 to 83 ft.–lbs.

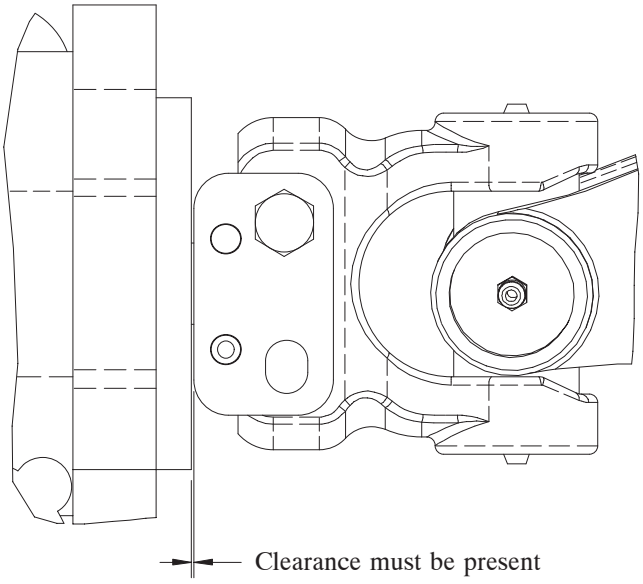

Figure 2

7. Grease all driveshaft fittings with No. 2 General Purpose Lithium Base Grease.

© 2005 by The Toro Company
8111 Lyndale Avenue South
Bloomington, MN 55420-1196

All Rights Reserved
Printed in the USA