Form No. 3353–371 Rev A

Cartridge Valve Kit

Reelmaster® 5000 & 6000 Series

Part No. 110–0000

Installation Instructions

1. Loosen the nuts securing the (2) solenoid coils to the top of the manifold as shown in figures 1 & 2. Figure 1 shows the Reelmaster 5200 & 5400 and figure 2 shows the Reelmaster 5500, 6500 & 6700.

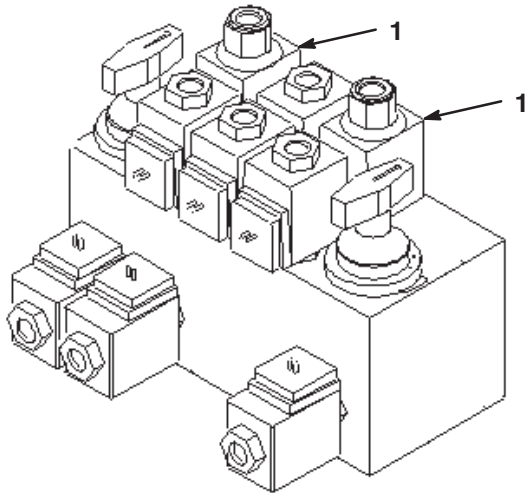

Reelmaster 5200 & 5400

Figure 1

1. Solenoid coils (2)

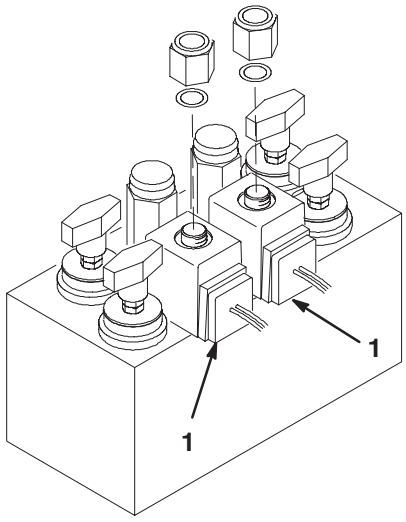

Reelmaster 5500, 6500 & 6700

Figure 2

1. Solenoid coils (2)

2. Unplug the solenoid coil wires from the wire harness connectors. Remove and discard the coils.

3. Loosen and remove both the cartridge valves from the manifold (Fig. 3). Make sure all O–rings are removed.

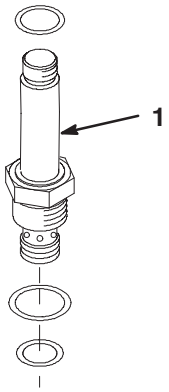

Figure 3

1. Cartridge valve

4. Thread the new cartridge valves w/O–rings into the manifold. Tighten the valves to 45 ft–lbs.

5. Install the new solenoid coils onto the valves. Install the O–rings and retaining nuts. Tighten the retaining nuts to 2 to 5 ft–lbs.

6. Connect the solenoid coil wires.

© 2005 by The Toro Company
8111 Lyndale Avenue South
Bloomington, MN 55420-1196

All Rights Reserved
Printed in the USA