CANADA FORM NO. 3313-229

TORO®

MODEL NO. 20564C-7900001 & UP

**PARTS CATALOG**

# 18″ REAR BAGGER ELECTRIC

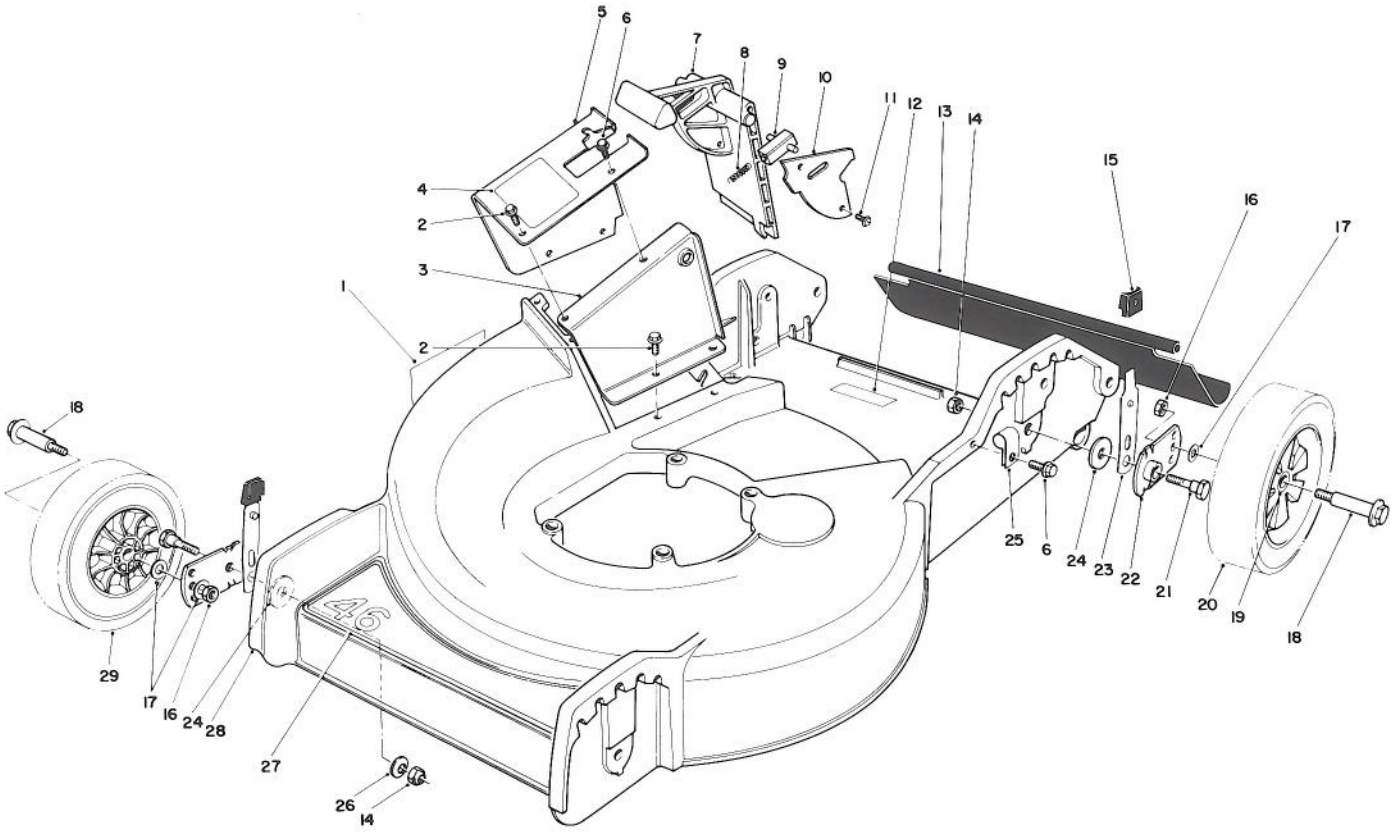

## HOUSING ASSEMBLY

| Ref. No. | Part No. | Description | No. Used |
|---|---|---|---|
| 1 | 62-3860 | Decal — Danger | 1 |
| 2 | 12-3270 | Screw — Thread Forming Hex. Washer Hd. | 6 |
| 3 | 49-8030 | Tunnel — Inner | 1 |
| 4 | 62-4060 | Decal — Danger | 1 |
| 5 | 11-8409 | Tunnel — Outer (Incl. Ref. #4) | 1 |
| 6 | 12-5450 | Screw — Thread Forming Hex. Washer Hd. | 2 |
| 7 | 33-0410 | Door — Mulching | 1 |
| 8 | 33-0450 | Spring — Latch | 1 |
| 9 | 47-5550 | Latch — Door | 1 |
| 10 | 33-0440 | Cover — Door | 1 |
| 11 | 32144-32 | Screw — Thread Forming Hex. Washer Hd. | 2 |
| 12 | 40-2850 | Decal — Made in Canada | 1 |
| 13 | 33-2380 | Rear Safety Shield | 1 |
| 14 | 3296-29 | Nut — Lock | 4 |
| 15 | 25-7740 | Knob — Arm | 4 |
| 16 | 52-3620 | Nut — Lock | 4 |
| 17 | 40-1940 | Washer — Wheel Bolt | 6 |
| 18 | 27-6230 | Bolt — Wheel Hex. Hd. | 4 |
| 19 | 27-6250 | Bushing — Wheel | 8 |
| 20 | 27-6200 | Wheel & Tire Assembly (Incl. Ref. #18) | 2 |
| 21 | 28-8880 | Screw — Pivot Hex. Hd. | 4 |
| 22 | 33-0400 | Pivot Arm Assembly | 4 |
| 23 | 25-8000 | Spring Arm Assembly | 4 |
| 24 | 33-0390 | Washer | 4 |
| 25 | 2412-89 | Clamp — R | 1 |
| 26 | 3290-456 | Washer — Bellville | 2 |
| 27 | 62-3200 | Decal — Deck | 1 |
| 28 | 12-1089 | Housing | 1 |
| 29 | 27-6210 | Wheel & Tire Assembly (Incl. Ref. #18) | 2 |

©The Toro Company — 1987

PRICE $1.00

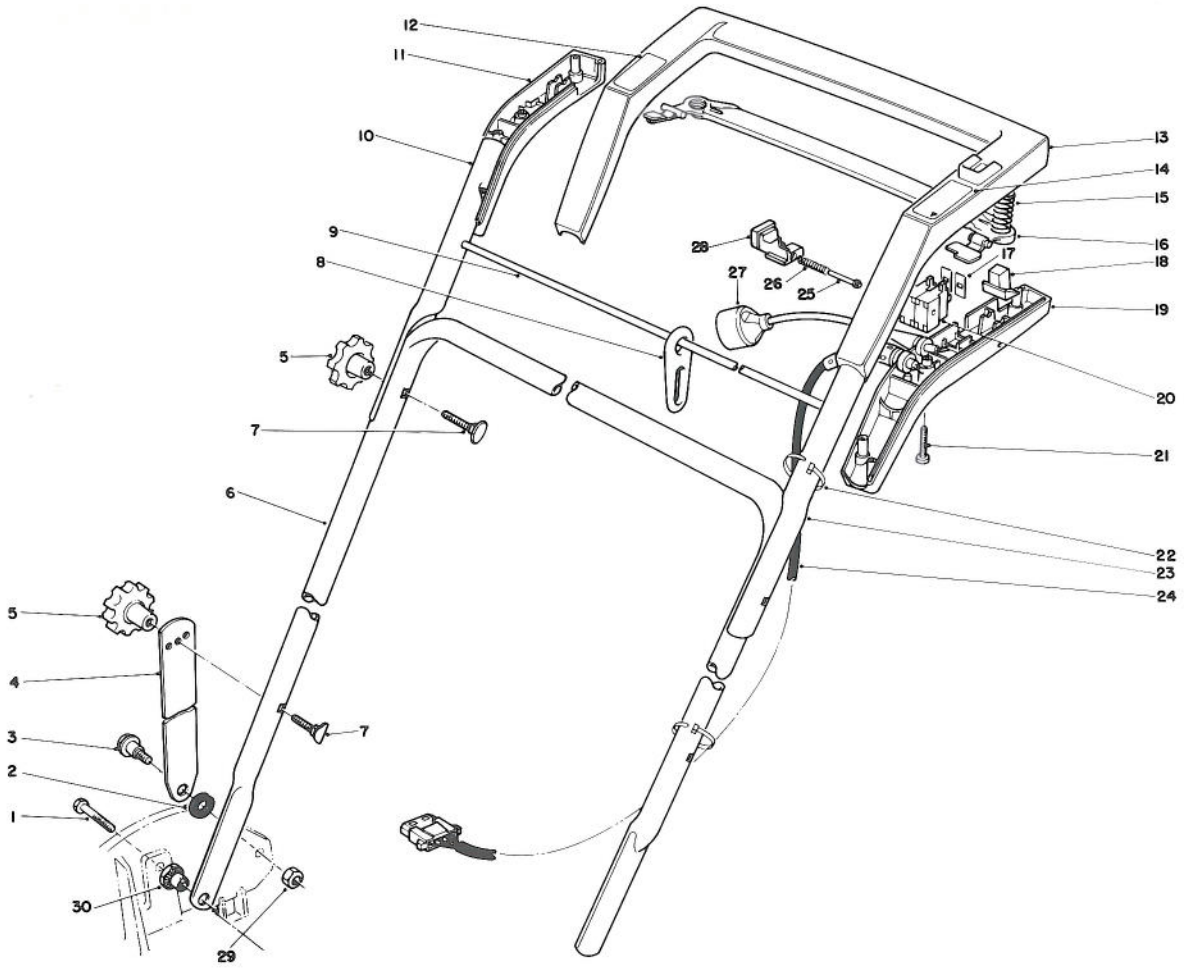


# HANDLE ASSEMBLY

| Ref. No. | Part No. | Description | No. Used |
|---|---|---|---|
| 1 | 322-6 | Screw — Cap Hex. Hd. | 2 |
| 2 | 3-3287 | Spacer — Handle Latch | 2 |
| 3 | 27-7211 | Screw — Shoulder Hex. Hd. | 2 |
| 4 | 43-1370 | Latch — Handle | 2 |
| 5 | 19-4050 | Knob — Handle | 4 |
| 6 | 50-9920 | Handle — Lower | 1 |
| 7 | 17-9421 | Screw — Handle | 4 |
| 8 | 50-9860 | Minder — Cord | 1 |
| 9 | 50-9850 | Rod — Minder, Cord | 1 |
| 10 | 50-9940 | Handle — Upper R. H. | 1 |
| 11 | 54-7830 | Cover — Handle Grip R. H. | 1 |
| 12 | 62-3260 | Decal — Shock Warning | 1 |
| 13 | 12-7069 | Grip — Handle (Incl. Ref. #12 & 14) | 1 |
| 14 | 62-3850 | Decal — Advisory | 1 |
| 15 | 34-1030 | Spring — Compression | 1 |
| 16 | 54-7810 | Lever — Squeeze | 1 |

| Ref. No. | Part No. | Description | No. Used |
|---|---|---|---|
| 17 | 55-4400 | Cover — Dust | 2 |
| 18 | 34-0320 | Button — Switch | 1 |
| 19 | 54-7820 | Cover — Handle Grip L. H. | 1 |
| 20 | 54-7800 | Switch — On & Off | 2 |
| 21 | 32104-120 | Screw — Plastic, Recess Cross Pan Hd. | 10 |
| 22† | | Cable Tie | 2 |
| 23 | 50-9930 | Handle — Upper L. H. | 1 |
| 24 | 50-9840 | Wire Harness — Motor | 1 |
| 25 | 50-9570 | Guide — Button | 1 |
| 26 | 50-9590 | Spring — Compression | 1 |
| 27 | 42-0771 | Cord — Supply | 1 |
| 28 | 54-7850 | Button — Interlock | 1 |
| 29 | 3296-29 | Nut — Lock | 2 |
| 30 | 12-2080 | Nut — Shoulder | 2 |
| * | 11-8559 | Loose Parts | 1 |

* Not Illustrated
† Obtain Locally

# MOTOR BRIGGS & STRATTON MODEL NO. 748001-0334-01

| Ref. No. | Part No. | Description | No. Used |
|---|---|---|---|
| 1 | 271711 | Filter | 1 |
| 2 | 93852 | Washer | 1 |
| 3 | 231298 | Nut — Hex. | 1 |
| 4 | 280709 | End Cap — Brush | 1 |
| 5 | 490833 | Brush Box Group (Includes: 490834 Brush & Pin Group) | 1 |
| 6 | 399995 | Housing Assembly | 1 |
| 7 | 490830 | Insulator Group — Housing | 1 |
| 8 | 490829 | Armature Group | 1 |
| 9 | 395477 | Ring Set — Retaining | 1 |
| 10 | 394770 | End Cap — Drive | 1 |
| 11 | 280478 | Fan | 1 |
| 12 | 490832 | Bolt — Thru (Includes Two Sets) | 1 |
| * | 397711 | Cover Group — Motor (Incl. Ref. #1-3) | 1 |

* Not Illustrated

## PRODUCT CHANGES

In an effort to make improvements available to TORO owners as quickly as possible, minor changes are incorporated into Toro's products from time to time that do not become immediately shown in the Parts Catalog. If such a change apparently has been made in your unit, which is not reflected in your manual, see your TORO Distributor or his Authorized TORO Service Dealer for information and part numbers.

## IDENTIFICATION AND ORDERING

### MODEL AND SERIAL NUMBERS

The Mower has two identification numbers: a model number and a serial number. The two numbers are stamped on a decal which is located on the mower housing between the rear wheels. In any correspondence concerning the mower, supply model and serial numbers to assure that correct information and replacement parts are obtained.

To order replacement parts from an Authorized TORO Service Dealer, supply the following information:

1. Model and serial numbers of the mower.
2. Part number, description, and quantity of part(s) desired.

**Note:** Do not order by reference number if a parts catalog is being used; use the PART NUMBER.

## The Toro Promise

*A Two Year Limited Warranty*
*On Model 20564C — Rear Bagger*

*The Toro Company promises to repair your TORO Product if defective in materials or workmanship. The following time periods from the date of purchase apply:*

Residential Product ..... 2 Years
Residential Products Used Commercially ..... 45 Days

*The costs of parts and labor are included, but the customer pays the transportation costs. Just return any residential product to an Authorized TORO Service Dealer or TORO Distributor.*

Should you feel your TORO Product is defective and wish to rely on The Toro Promise, the following procedure is recommended:

1. Contact any Authorized TORO Service Dealer, TORO Master Service Dealer, or TORO Distributor (the Yellow Pages of your telephone directory is a good reference source).
2. He will either instruct you to return the product to him or recommend another Authorized TORO Service outlet which might be more convenient.
3. Bring the product along with your original sales slip, or other evidence of purchase date, to the service dealer.
4. The servicing dealer will inspect the unit, advise you whether the product is defective and, if so, make all repairs necessary to correct the defect without extra charge to you.

If for any reason you are dissatisfied with the dealer's analysis of the defect or the service performed, you may contact us.

Write:

TORO Consumer Service Department
8111 Lyndale Avenue South
Minneapolis, Minnesota 55420

The above remedy of product defects through repair by an Authorized TORO Service Dealer is the purchaser's sole remedy for any defect.

THERE IS NO OTHER EXPRESS WARRANTY. ALL IMPLIED WARRANTIES OF MERCHANTABILITY AND FITNESS FOR USE ARE LIMITED TO THE DURATION OF THE EXPRESS WARRANTY.

Some states do not allow limitations on how long an implied warranty lasts, so the above limitation may not apply to you.

This warranty applies only to parts or components which are defective and does not cover repairs necessary due to normal wear, misuse, accidents, or lack of proper maintenance. Regular, routine maintenance of the unit to keep it in proper operating condition is the responsibility of the owner.

All warranty repairs reimbursable under The Toro Promise must be performed by an Authorized TORO Service Dealer using Toro approved replacement parts.

Repairs or attemped repairs by anyone other than an Authorized TORO Service Account are not reimbursable under The Toro Promise. In addition, these unauthorized repair attempts may result in additional malfunctions, the correction of which is not covered by warranty.

THE TORO COMPANY IS NOT LIABLE FOR INDIRECT, INCIDENTAL OR CONSEQUENTIAL DAMAGES IN CONNECTION WITH THE USE OF THE PRODUCT INCLUDING ANY COST OR EXPENSE OF PROVIDING SUBSTITUTE EQUIPMENT OR SERVICE DURING PERIODS OF MALFUNCTION OR NON-USE.

Some states do not allow the exclusion or limitation of incidental or consequential damages, so the above limitation or exclusion may not apply to you.

This warranty gives you specific legal rights, and you may also have other rights which vary from state to state.