Form No. 3326–205 Rev B

TORO®

Workman® 3200 & 4200

Liquid Cooled Gas Utility Vehicle

Model No. 07211—Serial No. 220000001 and Up
Model No. 07211TC—Serial No. 220000001 and Up
Model No. 07212—Serial No. 220000001 and Up
Model No. 07218—Serial No. 220000001 and Up

Operator's Manual

English (EN)

Warning

CALIFORNIA

Proposition 65 Warning

The engine exhaust from this product contains chemicals known to the State of California to cause cancer, birth defects, or other reproductive harm.

Important The engine in this product is not equipped with a spark arrester muffler. It is a violation of California Public Resource Code Section 4442 to use or operate this engine on any forest-covered, brush-covered, or grass-covered land as defined in CPRC 4126. Other states or federal areas may have similar laws.

This spark ignition system complies with Canadian ICES-002.

Ce système d'allumage par étincelle de véhicule est conforme à la norme NMB-002 du Canada.

Contents

	Page
Introduction	3
Safety	3
Specifications	10
Setup	12
Before Operating	18
Check Crankcase Oil	18
Fill Fuel Tank	19
Check Cooling System	19
Check Transaxle / Hydraulic Fluid	20
Check Front Differential Oil	20
Check Torque Of Wheel Nuts	21
Check Tire Pressure	21
Check Brake Fluid	22
Operation	23
Controls	23
Pre–starting Checks	26
Starting Engine	26
Driving Vehicle	26
Stopping Vehicle	26
Stopping Engine	27
New Vehicle Break–in	27
Check Interlock System	27
Operating Characteristics	27
Passengers	28
Speed	28
Turning	28
Braking	28
Tipovers	29
Hills	30
Loading And Dumping	30
Using The Differential Lock	31
Four Wheel Drive	31
Transporting Vehicle	31
Towing Vehicle	32
Trailer Towing	32
Remote Hydraulic Control	32
Maintenance	35
Service Interval Chart	35
Greasing Bearings And Bushings	35
Maintenance	37
Recommended Maintenance Schedule	37
Daily Maintenance Checklist	38
Heavy Duty Operation	39
Using Bed Safety Support	39
Jacking Vehicle	40
General Air Cleaner Maintenance Practices	40
Servicing Air Cleaner	40
Changing Engine Oil And Filter	41
Fuel System	41
Removing Debris From Engine Cooling System	42
Changing Engine Coolant	42
Adjusting Belts	44
Adjusting Accelerator Pedal	44
Changing Transaxle / Hydraulic Fluid	45
Replacing Hydraulic Filter	45
Change Front Differential Oil	45
Cleaning Hydraulic Strainer	46
Replacing Spark Plugs	46
Adjusting Brake Pedal	47
Adjusting Clutch Pedal	47
Adjusting Parking Brake	48
Adjusting Shift Cables	48
Adjusting High–low Cable	48
Adjusting Differential Lock Cable	48
Inspect Brakes	49
Inspect Tires	49
Front Wheel Toe–in	49
Inspect Constant Velocity Boot	49
Emergency Box Raising	49
Fuses	50
Jump Starting Procedure	50
Battery Storage	50
Battery Care	51
Hydraulic Schematic	52
Electrical Schematic	54
The Toro General Commercial Products Warranty	56

© 2001 by The Toro Company
8111 Lyndale Avenue South
Bloomington, MN 55420-1196

All Rights Reserved
Printed in the USA

Introduction

Read this manual carefully to learn how to operate and maintain your product properly. The information in this manual can help you and others avoid injury and product damage. Although Toro designs and produces safe products, you are responsible for operating the product properly and safely.

Whenever you need service, genuine Toro parts, or additional information, contact an Authorized Toro Distributor or Toro Customer Service and have the model and serial numbers of your product ready. These numbers are stamped into a plate located on the right frame member under dash.

Write the product model and serial numbers in the space below:

Model No: _____

Serial No. _____

This manual identifies potential hazards and has special safety messages that help you and others avoid personal injury and even death. ***Danger***, ***Warning***, and ***Caution*** are signal words used to identify the level of hazard. However, regardless of the hazard, be extremely careful.

Danger signals an extreme hazard that *will* cause serious injury or death if you do not follow the recommended precautions.

Warning signals a hazard that *may* cause serious injury or death if you do not follow the recommended precautions.

Caution signals a hazard that may cause minor or moderate injury if you do not follow the recommended precautions.

This manual uses two other words to highlight information. **Important** calls attention to special mechanical information and **Note:** emphasizes general information worthy of special attention.

Safety

The TORO WORKMAN meets the requirements of ANSI B56.8a–1994.

Supervisors, operators and service persons should be familiar with the following standards and publications: (The material may be obtained from the address shown).

- Flammable and Combustible Liquids Code: ANSI/NFPA 30
- National Fire Protection Association: ANSI/NFPA #505; Powered Industrial Trucks
  ADDRESS:
  National Fire Prevention Association
  Barrymarch Park
  Quincy, Massachusetts 02269 U.S.A
- ANSI/ASME B56.8 Personal Burden Carriers
  ADDRESS:
  American National Standards Institute, Inc.
  1430 Broadway
  New York, New York 10018 U.S.A.
- ANSI/UL 558; Internal Combustion Engine Powered Industrial Trucks
  ADDRESS:
  American National Standards Institute, Inc.
  1430 Broadway
  New York, New York 10018 U.S.A.
  OR
  Underwriters Laboratories
  333 Pfingsten Road
  Northbrook, Illinois 60062 U.S.A.

Safe Operating Practices

Warning

The WORKMAN is an off–highway vehicle only, and is not designed, equipped, or manufactured for use on public streets, roads or highways.

The WORKMAN was designed and tested to offer safe service when operated and maintained properly. Although hazard control and accident prevention partially are dependent upon the design and configuration of the machine, these factors are also dependent upon the awareness, concern, and proper training of the personnel involved in the operation, maintenance and storage of the machine. Improper use or maintenance of the machine can result in injury or death.

This is a specialized utility vehicle designed for off–road use only. its ride and handling will have a different feel than what drivers experience with passenger cars or trucks. So take time to become familiar with your WORKMAN.

Not all of the attachments that adapt to the WORKMAN are covered in this manual. See the specific Operator's Manual provided with attachment for additional safety instructions. READ THESE MANUALS.

TO REDUCE THE POTENTIAL FOR INJURY OR DEATH, COMPLY WITH THE FOLLOWING SAFETY INSTRUCTIONS.

Supervisor's Responsibilities

- Make sure operators are thoroughly trained and familiar with the Operator's Manual and all labels on the vehicle.
- Be sure to establish your own special procedures and work rules for unusual operating conditions (e.g. slopes too steep for vehicle operation). Use the 3rd High Lockout switch if high speed could result in a safety or vehicle abuse situation.

Before Operating

- Operate the machine only after reading and understanding the contents of this manual. A replacement manual is available by sending complete model and serial number to: The Toro Company, 8111 Lyndale Avenue South, Minneapolis, Minnesota 55420.
- Never allow children to operate the vehicle. Never allow adults to operate it without proper instructions. Only trained and authorized persons should operate this vehicle. Make sure all operators are physically and mentally capable of operating the vehicle. Anyone who operates the vehicle should have a motor vehicle license.
- This vehicle is designed to carry only you, the operator, and one passenger in the seat provided by the manufacturer. Never carry any other passengers on the vehicle.
- Never operate the vehicle when under the influence of drugs or alcohol.
- Become familiar with the controls and know how to stop the engine quickly.
- Keep all shields, safety devices and decals in place. If a shield, safety device or decal is malfunctioning, illegible, or damaged, repair or replace it before operating the machine.
- Always wear substantial shoes. Do not operate machine while wearing sandals, tennis shoes or sneakers. Do not wear loose fitting clothing or jewelry which could get caught in moving parts and cause personal injury.
- Wearing safety glasses, safety shoes, long pants and a helmet is advisable and required by some local safety and insurance regulations.
- Keep everyone, especially children and pets, away from the areas of operation.
- Before operating the vehicle, always check all parts of the vehicle and any attachments. If something is wrong, stop using vehicle. Make sure problem is corrected before vehicle or attachment is operated again.
- Since gasoline is highly flammable, handle it carefully.
  - Use an approved gasoline container.
  - Do not remove cap from fuel tank when engine is hot or running.
  - Do not smoke while handling gasoline.
  - Fill fuel tank outdoors and to about one inch below top of tank (bottom of filler neck). Do not overfill.
  - Wipe up any spilled gasoline.
- Check the safety interlock system daily for proper operation; refer to page 26. If a switch should malfunction, replace the switch before operating machine. After every two years, replace the interlock switches in the safety system, whether they are working properly or not.

While Operating

- Operator and passenger should remain seated whenever the vehicle is in motion. Operator should keep both hands on steering wheel, whenever possible and passenger should use hand holds provided. Keep arms and legs within the vehicle body at all times. Never carry passengers in box or on attachments. Remember your passenger may not be expecting you to brake or turn and may not be ready.
- Never overload your vehicle. Name plate (located under dash on passenger side) shows load limits for vehicle. Never overfill attachments or exceed the vehicle maximum GVW.

- When starting the engine:
  - Sit on operator's seat and engage parking brake.
  - Disengage PTO (if so equipped) and return hand throttle lever to OFF position (if so equipped).
  - Move shift lever to NEUTRAL and depress clutch pedal.
  - Keep foot off accelerator pedal.
  - Turn ignition key to START.
- Using the machine demands attention. Failure to operate vehicle safely may result in a accident, tip over of vehicle and serious injury or death. Drive carefully. To prevent tipping or loss of control:
  - Use extreme caution, reduce speed and maintain a safe distance around sand traps, ditches, creeks, ramps, any unfamiliar areas or other hazards.
  - Watch for holes or other hidden hazards.
  - Use caution when operating vehicle on a steep slope. Normally travel straight up and down slopes. Reduce speed when making sharp turns or when turning on hillsides. Avoid turning on hillsides whenever possible.
  - Use extra caution when operating vehicle on wet surfaces, at higher speeds or with a full load. Stopping time will increase with a full load. Shift into a lower gear before starting up or down a hill.
  - When loading bed, distribute load evenly. Use extra caution if the load exceeds the dimensions of the vehicle/bed. Operate vehicle with extra caution when handling off–center loads that cannot be centered. Keep loads balanced and secure to prevent them from shifting.
  - Avoid sudden stops and starts. Do not go from reverse to forward or forward to reverse without first coming to a complete stop.
  - Do not attempt sharp turns or abrupt maneuvers or other unsafe driving actions that may cause a loss of vehicle control.
  - When dumping, do not let anyone stand behind vehicle and do not dump load on any one's feet. Release tailgate latches from side of box, not from behind.
  - Before backing up, look to the rear and assure no one is behind. Back up slowly.
  - Watch out for traffic when near or crossing roads. Always yield the right of way to pedestrians and other vehicles. This vehicle is <u>not</u> designed for use on streets or highways. Always signal your turns or stop early enough so other persons know what you plan to do. Obey all traffic rules and regulations.
  - Never operate vehicle in or near an area where there is dust or fumes in the air which are explosive. The electrical and exhaust systems of the vehicle can produce sparks capable of igniting explosive materials.
  - Always watch out for and avoid low over hangs such as tree limbs, door jambs, over head walkways, etc. Make sure there is enough room over head to easily clear the vehicle and your head.
  - If ever unsure about safe operation, STOP WORK and ask your supervisor.
- Do not touch engine, transaxle, radiator, muffler or muffler manifold while engine is running or soon after it has stopped because these areas may be hot enough to cause burns.
- If the machine ever vibrates abnormally, stop immediately, turn engine off, wait for all motion to stop and inspect for damage. Repair all damage before commencing operation.
- Before getting off the seat:
  - Stop movement of the machine.
  - Lower bed.
  - Shut engine off and wait for all movement to stop.
  - Set parking brake.
  - Remove key from ignition.
  - Block wheels if machine is on an incline.

Maintenance

- Before servicing or making adjustments to the machine, stop engine, set parking brake and remove key from ignition to prevent accidental starting of the engine.
- Never work under a raised bed without placing bed safety support on fully extended cylinder rod.
- Make sure all hydraulic line connectors are tight, and all hydraulic hoses and lines are in good condition before applying pressure to the system.
- Keep body and hands away from pin hole leaks or nozzles that eject hydraulic fluid under high pressure. Use paper or cardboard, not hands, to search for leaks. Hydraulic fluid escaping under pressure can have sufficient force to penetrate skin and do serious damage. If fluid is injected into the skin it must be surgically removed within a few hours by a doctor familiar with this form of injury or gangrene may result.
- Before disconnecting or performing any work on the hydraulic system, all pressure in system must be relieved by stopping engine, cycling dump valve from raise to lower and/or lowering box and attachments.

Place the remote hydraulics lever in the float position. If box must be in raised position, secure with safety support.

- To make sure entire machine is in good condition, keep all nuts, bolts and screws properly tightened.
- To reduce potential fire hazard, keep the engine area free of excessive grease, grass, leaves and accumulation of dirt.
- If the engine must be running to perform a maintenance adjustment, keep hands, feet, clothing, and any parts of the body away from the engine and any moving parts. Keep everyone away.
- Do not overspeed engine by changing governor settings. Maximum engine speed is 3650 rpm. To assure safety and accuracy, have an Authorized TORO Distributor check maximum engine speed with a tachometer.
- If major repairs are ever needed or assistance is required, contact an Authorized TORO Distributor.
- To be sure of optimum performance and safety, always purchase genuine TORO replacement parts and accessories. Replacement parts and accessories made by other manufacturers could be dangerous. Altering this vehicle in any manner may affect the vehicle's operation, performance, durability or its use may result in injury or death. Such use could void the product warranty of The TORO Company.
- This vehicle should not be modified without the TORO Company's authorization. Direct any inquiries to The TORO Company, Commercial Division, Vehicle Engineering Dept., 300 West 82nd St., Bloomington, Minnesota 55420–1196. USA

Sound Pressure Level

This unit has an equivalent continuous A-weighted sound pressure at the operator ear of: 82 dB(A), based on measurements of identical machines per Directive 98/37/EC and amendments.

Vibration Level

Hand-Arm

This unit does not exceed a vibration level of 2.5 m/s^2 at the hands based on measurements of identical machines per ISO 5349 procedures.

Whole Body

This unit does not exceed a vibration level of 0.5 m/s^2 at the posterior based on measurements of identical machines per ISO 2631 procedures.

Safety and Instruction Decals

Safety decals and instructions are easily visible to the operator and are located near any area of potential danger. Replace any decal that is damaged or lost.

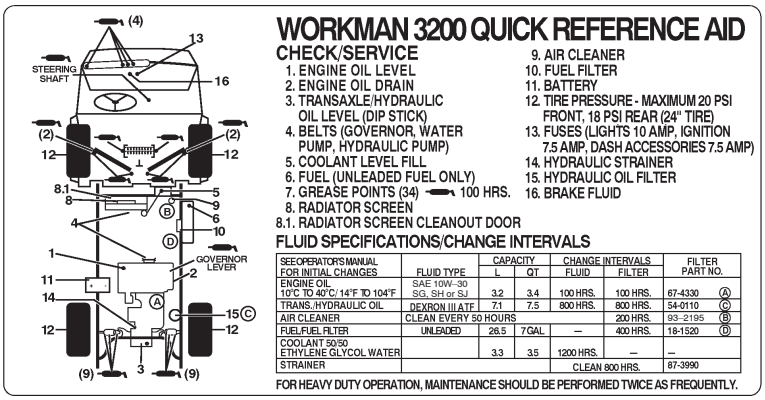

ON REAR SKIRT
(Part No. 99–1216 – 2 wheel drive)
(Part No. 99–1217 – 4 wheel drive)



ON FAN SHROUD
(Part No. 98–9335)

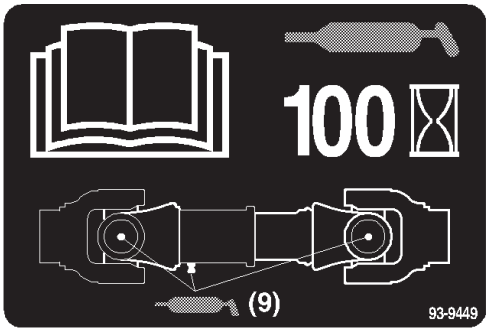

ON REAR AXLE TUBE
(Part No. 93–9449)



ON SKIRT
(Part No. 87–5920)

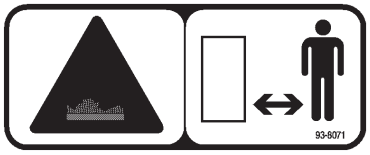

ON LEFT FRAME RAIL
(Part No. 93–8071)



ON CONSOLE
(Part No. 87–6000)

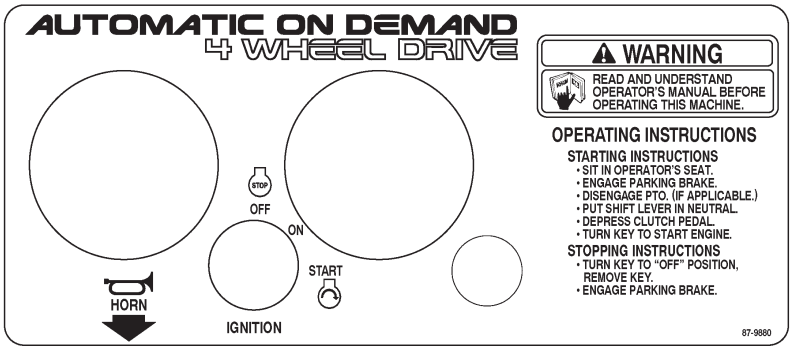

ON DASH
(Part No. 87–9880–4 wheel drive)
(Part No. 87–8520–2 wheel drive)

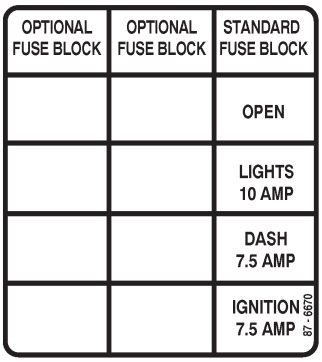

UNDER DASH NEXT TO FUSE BLOCK (Part No. 87–6670)



ON CONSOLE (Part No. 87–6020)



ON DASH (Part No. 94–5272)



ON FRONT PANEL OF BED (Part No. 92–5955) Model 07212 only



ON SUPPORT TUBE UNDER BED (Part No. 92–1312) Model 07212 only



ON SIDE PANELS OF BED (2) (Part No. 92–1319) Model 07212 only

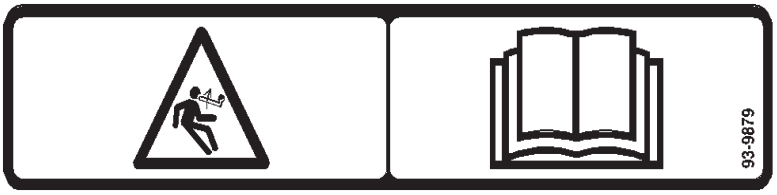

ON SPRING CRADLE (Part No. 93–9879)



ON LIFT CYLINDERS & BED SUPPORT (Part No. 93–9852)

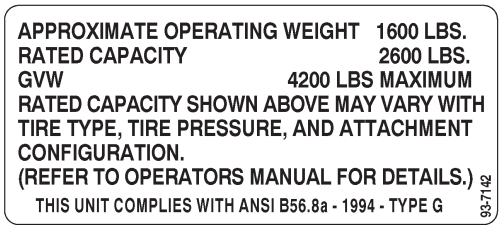

UNDER RIGHT SIDE OF DASH (Part No. 93–7142–4 wheel drive) (Part No. 87–7000–2 wheel drive)

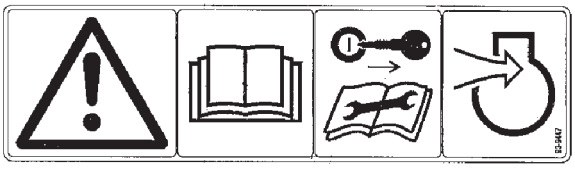

ON RADIATOR SCREEN (Part No. 93–9447)

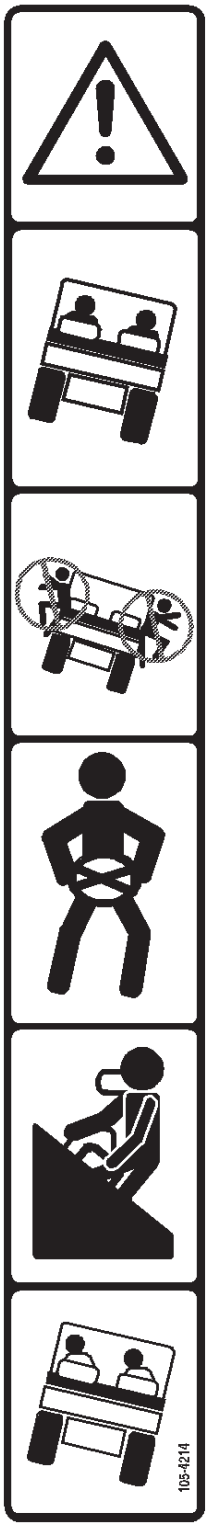

ON ROPS
(Part No. 105–4214)

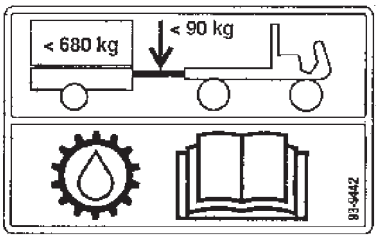

ON AXLE TUBE
(Part No. 93–9442)

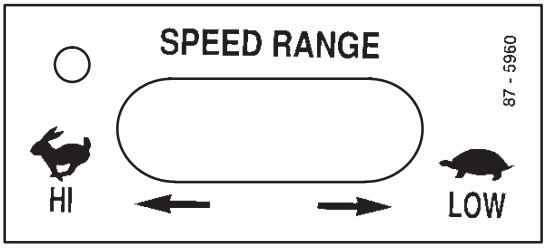

ON CONSOLE
(Part No. 87–5960)

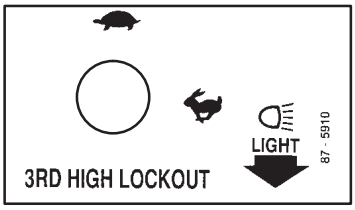

ON DASH
(Part No. 87–5910)



ON BATTERY COVER
(Part No. 93–6687)

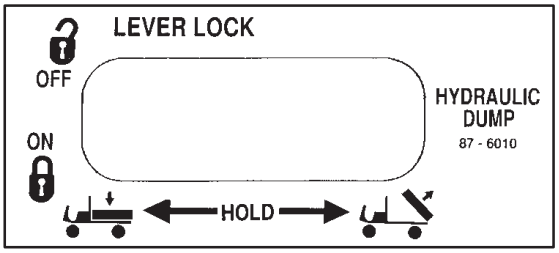

ON CONSOLE
(Part No. 87–6010)

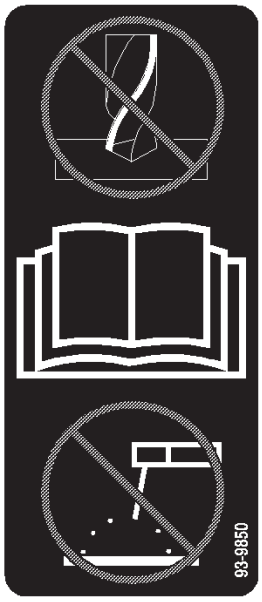

ON ROPS
(Part No. 93–9850)

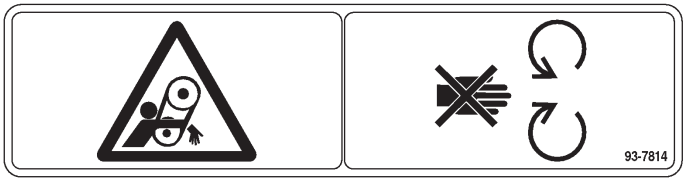

ON FAN SUPPORT
(Part No. 93–7814)

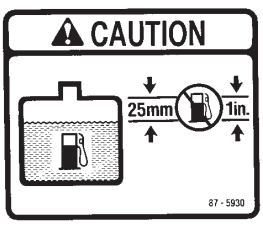

ON SKIRT
(Part No. 87–5930)

Specifications

Note: Specifications and design subject to change without notice.

General Specifications

Type	4 wheel step through, out front operator style, two person vehicle. Certified to meet ANSI Specifications B56.8a–1994.
Engine	Daihatsu 31 hp, three cylinder, liquid cooled, counterbalanced, gasoline engine; regulated to 3650 rpm by a mechanical governor. 58.1 cu. in. (952 cc) displacement. Forced lubrication by gear pump. 40 amp alternator with I/C regulator. Spin–on oil filter.
Air Cleaner	Heavy duty, 2-stage, remote mounted air cleaner.
Battery	12 volt with 650 cold cranking Amps @ 0 degrees F.
Cooling System	Mid mounted radiator with removable screen and lower clean out access. Cooling system capacity is approximately 4 qts. of 50/50 mixture of ethylene glycol anti–freeze.
Fuel System	Gasoline tank capacity is 7 gallons. 12 volt, electric fuel pump.
Transmission	Rear transaxle configuration, twin axle drive. 3 speed synchromesh, H–shift pattern with high–low range providing 6 forward and 2 reverse speeds. Manual engage differential lock. 4 wheel drive output shaft (4 wd only).
Clutch	6.7” clutch and pressure plate.
Front Differential (4wd only)	5.0 to 1 ratio
Center Differential (4wd only)	Bi–directional overrunning clutch
Frame	Welded, high strength steel channels and tubes.
Front Suspension	Independent “A” frame control arm, dual progressive rate coil springs and dual shock absorbers with anti–sway bar.
Rear Suspension	DeDion axle (weight carrying axle is independent of transaxle), leaf spring and dual shock absorbers.
Steering System	Power assist, 3 position tilt steering wheel, 3–3/4 turns lock–to–lock. 17.5 to 1 ratio, 14” diameter steering wheel.
Tires	Front tires: 20” x 10”-10, 4-ply rating, rib tread. Rear tires: 23” x 13”-12, 6-ply rating, turf tread.
Brakes	4 wheel hydraulic, dual safety circuit self adjusting drum: 7” diameter front and 8” diameter rear (2wd) 8” diameter front and rear (4wd). Hand actuated parking brake actuates rear brake shoes.
ROPS	2 post roll over protection structure with shoulder restraint.
Hydraulics	4 gpm pressure balanced gear pump provides hydraulic flow for power steering, lift and optional remote hydraulics. Lift control valve and dual cylinders for lifting dump box. Transaxle is used for reservoir for hydraulic system. 8 quart total capacity. Spin–on 25 micron hydraulic oil filter. 100 mesh strainer in transaxle.
Seat	Bucket seats with shoulder and hip restraints.
Controls	Foot operated accelerator, clutch and brake pedals. Hand operated shifter, differential lock, parking brake, high–low range shifter, hydraulic lift and tilt steering levers. Ignition switch, light switch, horn button and 3rd high lockout switch.

Gauges	Hour meter, fuel gauge, coolant temperature gauge. Warning light cluster includes engine low oil pressure and charge indicator. Tachometer optional.
Lights	Twin halogen headlights and single taillight. Rear stop light.
Tow Hitch	Hitch has hole for ball or pin.
Interlocks	Clutch pedal must be depressed to start engine.
Ground Speed	Forward Speeds w/23” Rear Tires High range: 7.6/11.5/19.8 mph Low range: 2.9/4.5/7.7 mph Reverse Speeds w/24” Tires High range: 7.2 mph Low range: 2.8 mph
Base Weight (Dry w/o flatbed)	1400 lbs. (2wd) 1600 lbs. (4wd)
Rated Capacity	2,600 lbs. (includes 200 lb. operator, 200 lb. passenger and loaded attachment).
Maximum. Gross Vehicle Weight	4,000 lbs. (2wd) 4,200 lbs. (4wd)
Tow Capacity	Tongue weight 200 lbs. Maximum trailer weight 1,500 lbs.
Ground Clearance	7” w/ no load
Wheel Base	70”
Wheel Tread (center line to center line)	Front 46” Rear 47.7”

Dimensions

Overall Width	63”
Overall Length	124.5” w/o bed 127” w/full bed 133” w/2/3 bed in rear mounting location
Height	75” to top of ROPS

Setup

Note: Determine the left and right side of the machine from the normal operating position.

Description	Qty.	Use
Fenders–Rear	2	Mount rear fenders
Capscrew 5/16–18 x 1" lg.	4	
Flatwasher .344" I.D.	4	
Locknut 5/16–18	4	
Capscrew 1/4–20 x 1" lg.	12	
Flatwasher .281" I.D.	12	
Locknut 1/4–20	12	
Truss head screw	6	
Locknut 3/8–16	6	
Wheel Nut	10	Mount wheels
Wheel–Front	2	
Wheel Nut	10	
Wheel–Rear	2	
Steering wheel	1	Install steering wheel
Foam Seal	1	
Washer	1	
Nut	1	
Cap	1	
Fenders–Front	2	Install front fenders
Phillips screw	14	
Washer	14	
Locknut 10–24	14	
ROPS	1	Mount ROPS
Capscrew 1/2–13 x 3" lg.	4	
Locknuts 1/2–13	4	
Operator's Manual (vehicle)	2	Read before operating the machine.
Parts Catalog	1	
Registration Card	1	Fill out and return to Toro.

Install Rear Fenders

1. Loosen the locknuts and capscrews securing tail light plates to right and left frame brackets (Fig. 1).
2. Pivot tail light plates rearward and tighten capscrews and locknuts.

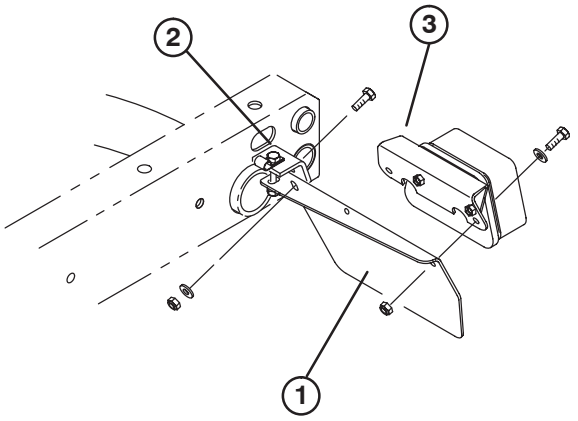

Figure 1

1. Tail light plate
2. Frame bracket
3. Tail light mounting bracket

3. Secure rear of each tail light plate to rear of frame brackets with a 5/16–18 x 1" lg. capscrew, .281" I.D. flatwasher and nut, as shown in figure 1.
4. On left side, remove (2) capscrews, washers and nuts securing tail light mounting bracket to tail light plate (Fig. 2).

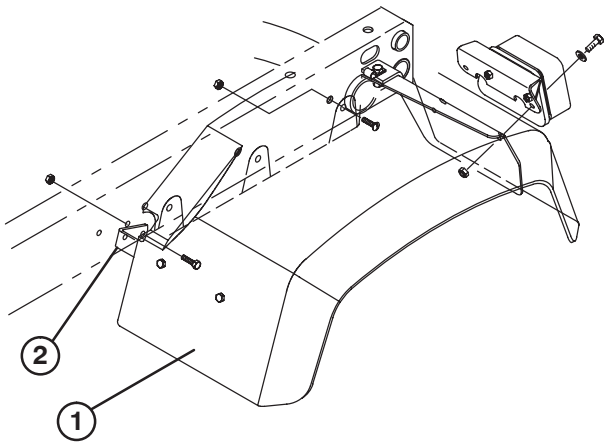

Figure 2

1. Fender
2. Fender mounting bracket

5. Position a fender over each tail light plate, aligning mounting holes.
6. On left side, loosely secure tail light mounting bracket, rear of fender and tail light plate together with (2) capscrews, washers and nuts, previously removed.
7. On right side, secure rear of fender to tail light plate with (2) 1/4–20 x 1" lg. capscrews, .281" I.D. flatwashers and nuts
8. Loosely secure front of each fender mounting bracket to frame with a 1/4–20 x 1" lg. capscrew and locknut.
9. Loosely secure side of each fender to frame (3) 3/8–16 x 1" lg. truss head screws and locknuts.

Note: Capscrews securing fronts of fenders to mounting brackets may have to be loosened to align all mounting holes.

10. Tighten all fasteners.

Install Wheels

1. Remove and discard fasteners securing wheels.
2. Mount wheels and torque nuts to 45-55 ft-lb.

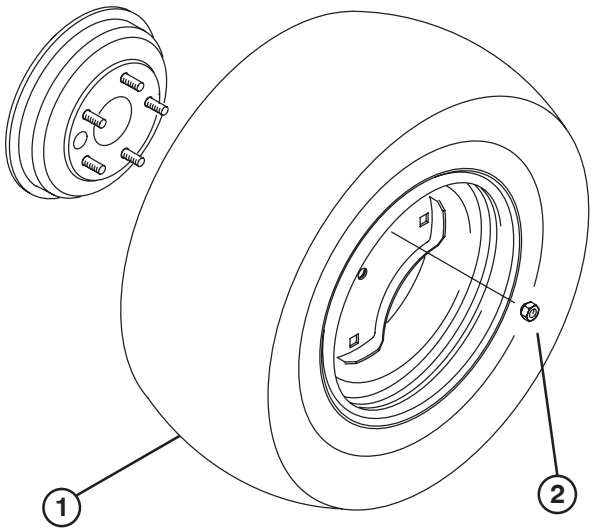

Figure 3

1. Wheel
2. Wheel nut

Install Steering Wheel

1. Remove jam nut from steering shaft. Slide foam seal, steering wheel and washer onto steering shaft.
2. Secure steering wheel to shaft with jam nut and tighten it to 10–15 ft-lb.
3. Install cap to steering wheel.

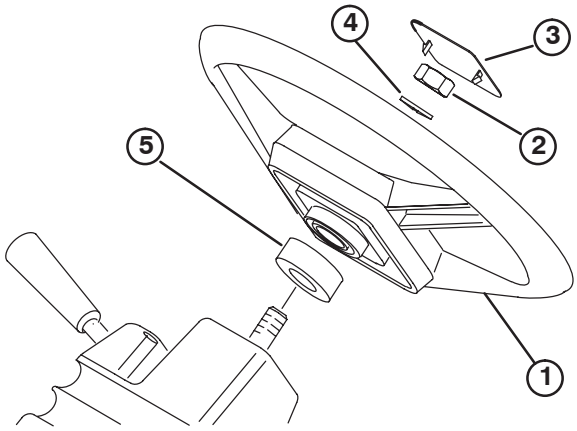

Figure 4

1. Steering wheel
2. Jam nut
3. Cap
4. Washer
5. Foam seal

Install Front Fenders

1. Mount a fender to each side of skirt with (7) 10–24 Phillips screws, flat washers and locknuts.

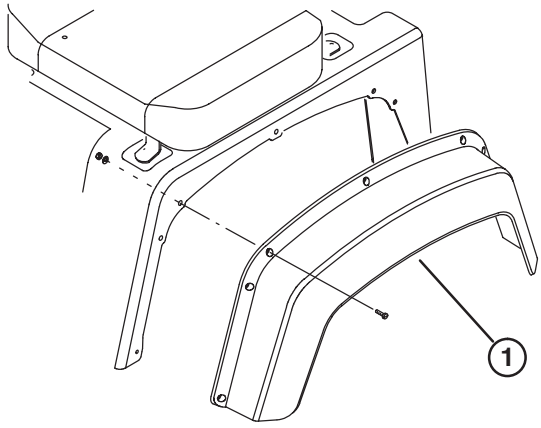

Figure 5

1. Fender

Install ROPS

1. Insert each side of ROPS into mounting bracket on each side of vehicle frame, positioning ROPS as shown in figure 6.

2. Secure each side of ROPS to mounting brackets with (2) 1/2–13 x 3" lg. capscrews and locknuts.

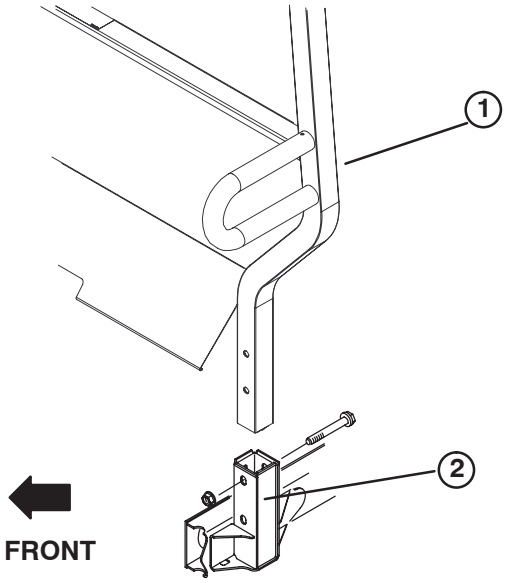

Figure 6

1. ROPS
2. Mounting bracket

Activate and Charge Battery

If battery is not filled with electrolyte or activated, it must be removed from vehicle, filled with electrolyte and charged. Bulk electrolyte with 1.260 specific gravity can be purchased from a local battery supply outlet.

Warning

CALIFORNIA

Proposition 65 Warning

Battery posts, terminals, and related accessories contain lead and lead compounds, chemicals known to the State of California to cause cancer and reproductive harm. ***Wash hands after handling.***

Danger

Battery electrolyte contains sulfuric acid which is a deadly poison and causes severe burns.

- **Do not drink electrolyte and avoid contact with skin, eyes or clothing. Wear safety glasses to shield your eyes and rubber gloves to protect your hands.**
- **Fill the battery where clean water is always available for flushing the skin.**

1. Loosen knobs securing battery cover to battery base and slide cover off.
2. Remove capscrew, washers and locknut securing battery hold down to battery base. Remove hold down and slide battery out of battery base.

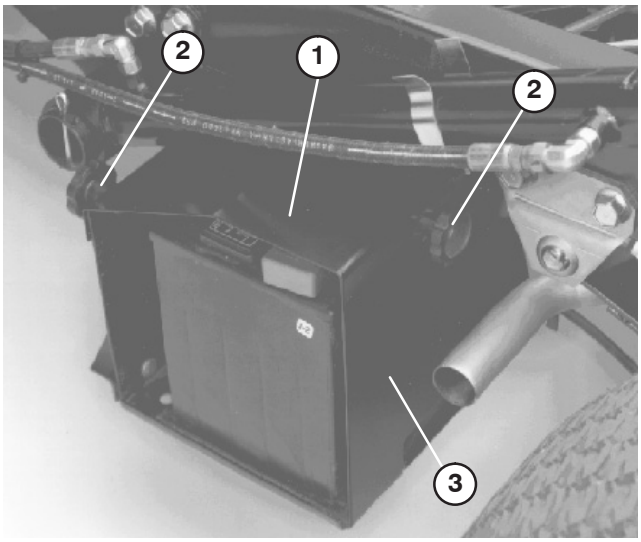

Figure 7

1. Battery cover
2. Knob
3. Battery base

3. Remove filler caps from battery and slowly fill each cell until electrolyte is just above the plates.
4. Replace filler caps and connect a 3 to 4 amp battery charger to the battery posts. Charge the battery at a rate of 3 to 4 amperes for 4 to 8 hours.

Warning

Charging the battery produces gasses that can explode.

Never smoke near the battery and keep sparks and flames away from battery.

5. When battery is charged, disconnect charger from electrical outlet and battery posts.

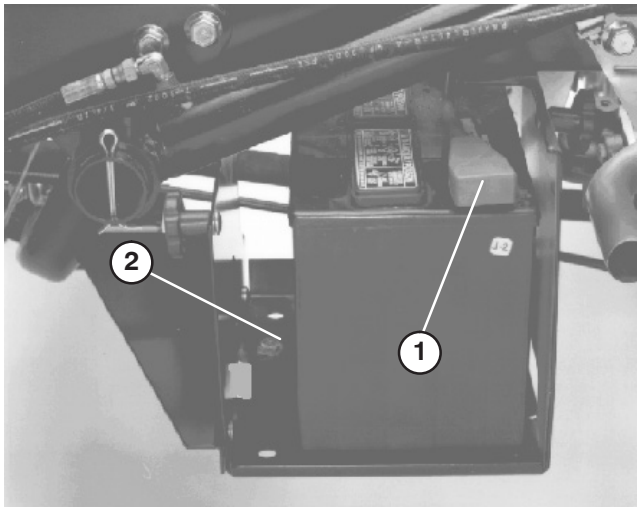

Figure 8

1. Positive (+) cable
2. Hold down

6. Remove filler caps. Slowly add electrolyte to each cell until level is up to fill ring. Install filler caps.

Important **Do not overfill battery. Electrolyte will overflow onto other parts of the vehicle and severe corrosion and deterioration will result.**

7. Slide battery into battery base so battery terminals are toward the rear of the vehicle.
8. Install the positive cable (red) to the positive (+) terminal and the negative cable (black) to the negative (—) terminal of the battery and secure with capscrews and nuts. Slide the rubber boot over the positive terminal to prevent possible short–out from occurring.

Warning

Incorrect battery cable routing could damage the machine and cables causing sparks. Sparks can cause the battery gasses to explode, resulting in personal injury.

- **Always *disconnect* the negative (black) battery cable before disconnecting the positive (red) cable.**
- **Always *connect* the positive (red) battery cable before connecting the negative (black) cable.**

9. Install battery hold down and secure to base with capscrew, washers and locknut.
10. Reinstall battery cover to battery base and tighten knobs.

Full Bed Removal

1. Start engine. Engage hydraulic lift lever and lower bed until cylinders are loose in slots. Release lift lever and turn off engine.
2. Remove lynch pins from outer ends of cylinder rod clevis pins (Fig. 9).

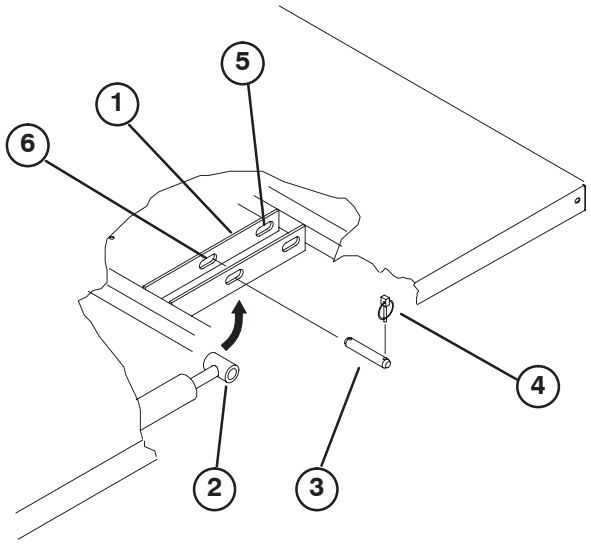

Figure 9

1. Bed mounting plate
2. Cylinder rod end
3. Clevis pin
4. Lynch pin
5. Rear slots (Full bed)
6. Front slots (2/3 bed)

3. Remove clevis pins securing cylinder rod ends to bed mounting plates by pushing pins towards inside (Fig. 10).
4. Remove lynch pins and clevis pins securing pivot brackets to frame channels (Fig. 10).
5. Lift bed off vehicle.

Caution

The full bed weighs approximately 210 pounds, so do not try to install or remove it by yourself. Get the help of two or three other people.

6. Store cylinders in storage clips. Engage hydraulic lift lock lever on vehicle to prevent accidental extension of lift cylinders.

Re–Install Full Bed

Note: If bed sides will be installed on flat bed, it is easier to install them before bed is installed on vehicle.

Note: Assure rear pivot plates are bolted to the bed frame/channel so that lower end angles to the rear (Fig. 10).

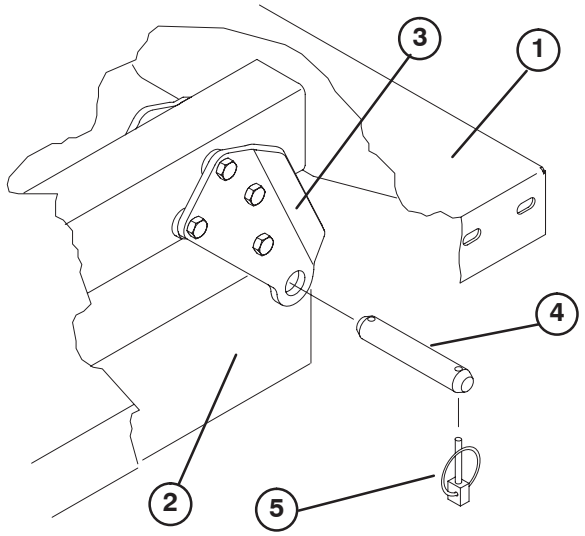

Figure 10

1. Left rear corner of bed
2. Vehicle frame channel
3. Pivot plate
4. Clevis pin
5. Lynch pin

Note: Make sure spacer brackets and wear blocks (Fig. 11) are installed or radiator cover may be damaged.

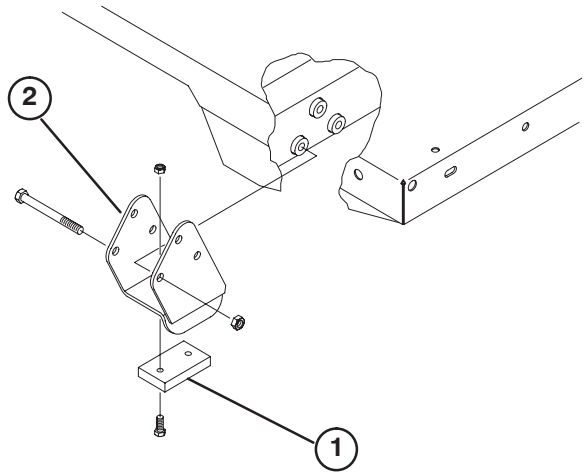

Figure 11

1. Spacer bracket
2. Wear block

1. Assure lift cylinders are fully retracted.

Caution

The full bed weighs approximately 210 pounds, so do not try to install or remove it by yourself. Get the help of two or three other people.

2. Carefully set bed onto vehicle frame aligning rear bed pivot plate holes with holes in rear frame channel and install (2) clevis pins and lynch pins (Fig. 10).

3. With bed lowered, secure each cylinder rod end, to appropriate slots in bed mounting plates with clevis pin and lynch pin. Insert clevis pin from outside of bed with lynch pin toward outside (Fig. 10). Rear slots are for full bed installation and front slots are for 2/3 bed installation.

Note: Engine may need to be started to extend or retract cylinders for alignment with holes. **Keep fingers out!**

Note: Unused slot can be plugged with a capscrew and nut to prevent assembly errors.

4. Start engine and engage hydraulic lift lever to raise bed. Release lift lever and turn off engine. Secure raised bed with a hoist or block it to prevent it from accidentally falling.

5. Install lynch pins to inside ends of clevis pins.

Note: If automatic tail gate release has been installed on bed, make sure front dump link rod has been placed on inside of left side clevis pin before lynch pin is installed.

6. Once cylinder installation has been completed, the bed safety support can be used to prevent accidental lowering of the bed. Refer to Using Bed Safety Support.

Before Operating

Caution

Before servicing or making adjustments to the machine, stop engine, set parking brake and remove key from the switch. Any load material must be removed from bed or other attachment before working under raised bed. Always rotate safety support to the down position before working under raised bed.

Check Crankcase Oil

The engine is shipped with approximately 3.5 quarts (w/ filter) of oil in the crankcase; however, level of oil must be checked before and after the engine is first started.

1. Position machine on a level surface.
2. Remove dipstick and wipe it with a clean rag. Insert dipstick into tube and make sure it is seated fully. Remove dipstick and check level of oil.

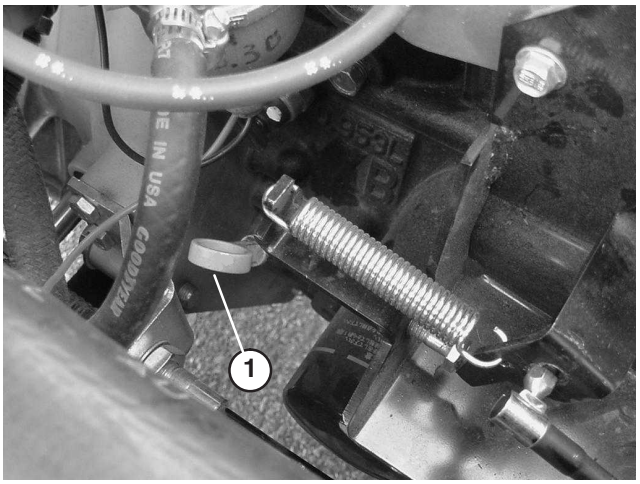

Figure 12

1. Dipstick

3. The engine uses any high-quality detergent oil having the American Petroleum Institute -API- “service classification” SH or higher. Choose a viscosity according to the table in figure 13.

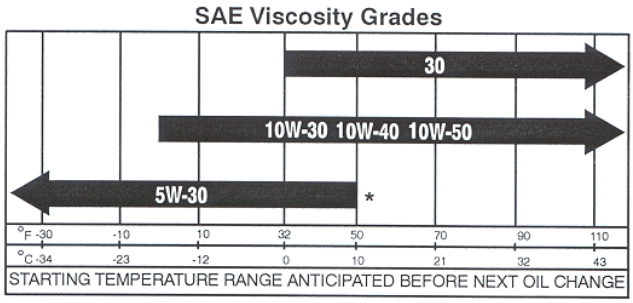

Figure 13

4. If oil level is low, remove filler cap and add enough oil to raise level to FULL mark on dipstick.

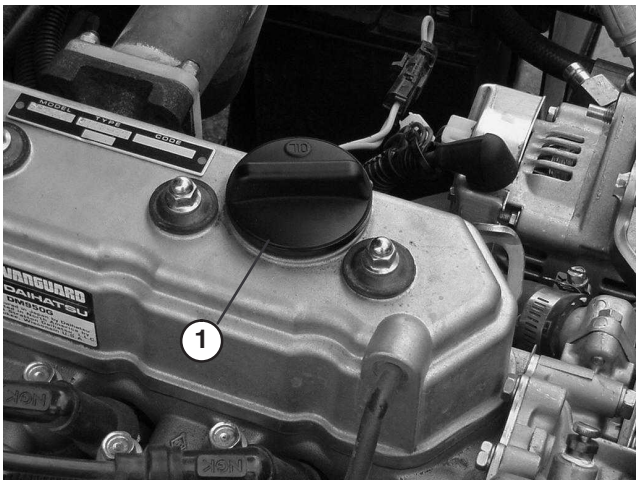

Figure 14

1. Filler cap

Note: When adding oil, remove dipstick to allow proper venting, pour oil slowly and check the level often during this process. DO NOT OVERFILL.

Important When adding engine oil or filling oil, there must be clearance between the oil fill device and the oil fill hole in the valve cover as shown in figure 15. This clearance is necessary to permit venting when filling, which prevents oil from overrunning into breather.

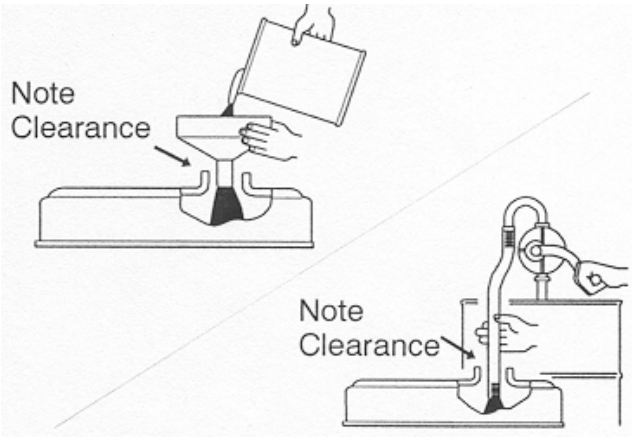

Figure 15

5. Install the dipstick firmly in place.

Important **Check level of oil every 8 operating hours or daily. Change oil and filter initially after the first 50 hours of operation, thereafter, change oil and filter every 100 hours. However, change oil more frequently when engine is operated in extremely dusty or dirty conditions.**

Note: After filling or changing oil, start and run the engine at idle for 30 seconds. Shut engine off. Wait 30 seconds and check oil level. Add enough oil to raise level to FULL mark on dipstick.

Fill Fuel Tank

Fuel tank capacity is approximately 7 gallons.

The Toro Company Strongly Recommends The Use Of Fresh, Clean, Unleaded Regular Grade Gasoline In Toro Gasoline Powered Products. Unleaded Gasoline Burns Cleaner, Extends Engine Life, And Promotes Good Starting By Reducing The Build–up Of Combustion Chamber Deposits. Minimum Octane Rating Of 87.

Note: Never Use Methanol, Gasoline Containing Methanol, Gasoline Containing More Than 10% Ethanol, Gasoline Additives, Or White Gas Because Engine Fuel System Damage Could Result.

1. Clean area around fuel tank cap.

2. Remove fuel tank cap.

Danger

Under certain conditions, diesel fuel and fuel vapors are highly flammable and explosive. A fire or explosion from fuel can burn you and others and can cause property damage.

- **Use a funnel and fill the fuel tank outdoors, in an open area, when the engine is off and is cold. Wipe up any fuel that spills.**
- **Do not fill the fuel tank completely full. Add fuel to the fuel tank until the level is 1/4 to 1/2 in. (6 to 13 mm) below the bottom of the filler neck. This empty space in the tank allows the fuel to expand.**
- **Never smoke when handling fuel, and stay away from an open flame or where fuel fumes may be ignited by a spark.**
- **Store fuel in a clean, safety-approved container and keep the cap in place.**

3. Fill tank to about one inch below top of tank, (bottom of filler neck). **DO NOT OVERFILL.** Then install cap.

4. Wipe up any fuel that may have spilled to prevent a fire hazard.

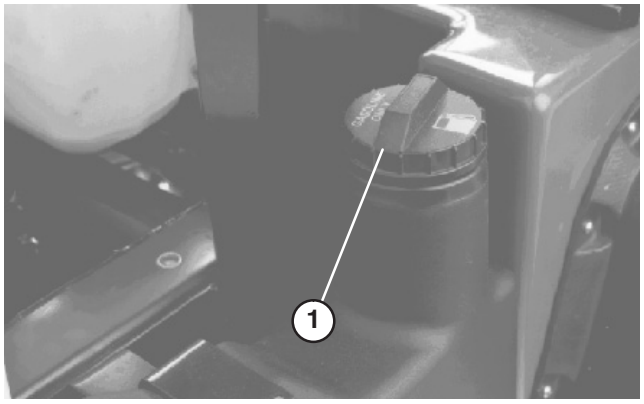

Figure 16

1. Fuel tank cap 2.

Check Cooling System

Capacity of cooling system is approximately 4 qts.

The cooling system is filled with a 50/50 solution of water and permanent ethylene glycol anti–freeze. Check level of coolant at beginning of each day before starting the engine.

1. Park machine on a level surface.

Caution

If the engine has been running, the pressurized, hot coolant can escape and cause burns.

- **Do not open the radiator cap when the engine is running.**
- **Use a rag when opening the radiator cap, and open the cap slowly to allow steam to escape.**

2. Check coolant level. Coolant should be up to COLD line on reserve tank, when engine is cold.

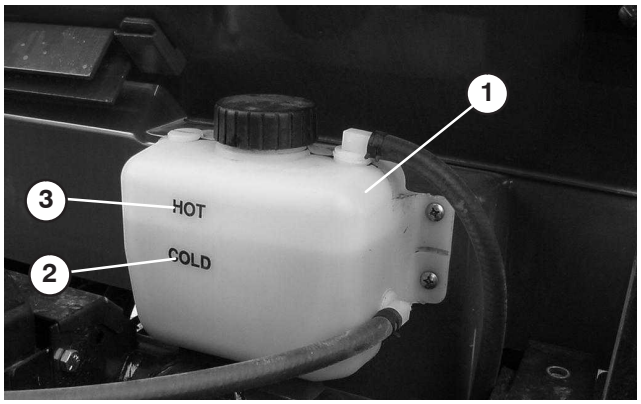

Figure 17

1. Reserve tank
2. Cold line
3. Hot line

3. If coolant is low, remove reserve tank cap and add a 50/50 mixture of water and permanent ethylene glycol anti–freeze. **DO NOT OVERFILL**.

4. Install reserve tank cap.

Check Transaxle / Hydraulic Fluid

The transaxle reservoir is filled with Dexron Ill ATF. Check level before engine is first started and every 8 hours or daily, thereafter. Capacity of system is 7.5 qt.

1. Position the vehicle on a level surface.

2. Clean area around dipstick.

3. Unscrew dipstick from top of transaxle and wipe it with a clean rag.

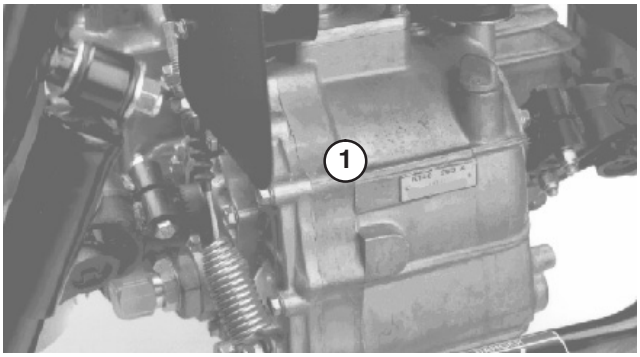

Figure 18

1. Dipstick
2.

4. Screw dipstick into transaxle and make sure it is seated fully. Unscrew dipstick and check fluid level. Fluid should be up to top of flat portion of dipstick. If level is low, add enough fluid to achieve the proper level.

Check Front Differential Oil

Four wheel drive only

The differential is filled with 10W30 oil. Check level of oil every 100 hours or monthly. Capacity of system is 1 qt.

1. Position the vehicle on a level surface.

2. Clean area around fill/check plug on side of differential.

3. Remove fill/check plug and check level of oil. Oil should be up to hole. If oil is low, add 10W30 oil.

4. Re–install fill/check plug.

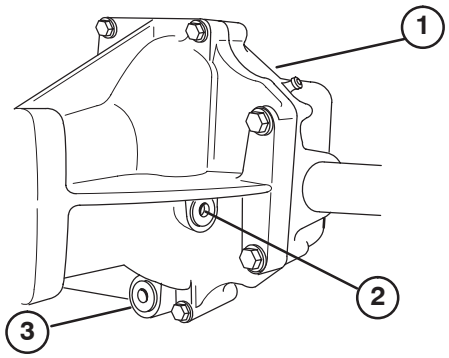

Figure 19

1. Front differential
2. Fill/check plug
3. Drain plug

Check Torque Of Wheel Nuts

Warning

Failure to maintain proper torque of the wheel nuts could result in failure or loss of wheel and may result in personal injury.

Torque the front and rear wheel nuts to 45–65 ft.-lb. (61–88 N·m) after 1–4 hours of operation and again after 10 hours of operation. Torque every 200 hours thereafter.

Check Tire Pressure

Check tire pressure every 8 hours or daily to assure proper levels.

Maximum air pressure in front tires is 20 psi and rear (24”) tires is 18 psi.

1. The air pressure needed is determined by the payload carried.
2. The lower the air pressure, the less the compaction and tire marks are minimized. Lower pressure should not be used for heavy payloads at high speeds. Tire damage may result.
3. Higher pressures should be used for heavier payloads at higher speeds. Do not exceed the maximum pressure. Use the following charts to determine correct tire pressures for tire size and payload of vehicle.

Important When replacing tires, on the 4wd vehicle, only use replacements approved for the Workman. Use of tires not approved may cause turf damage or accelerated drive train damage.

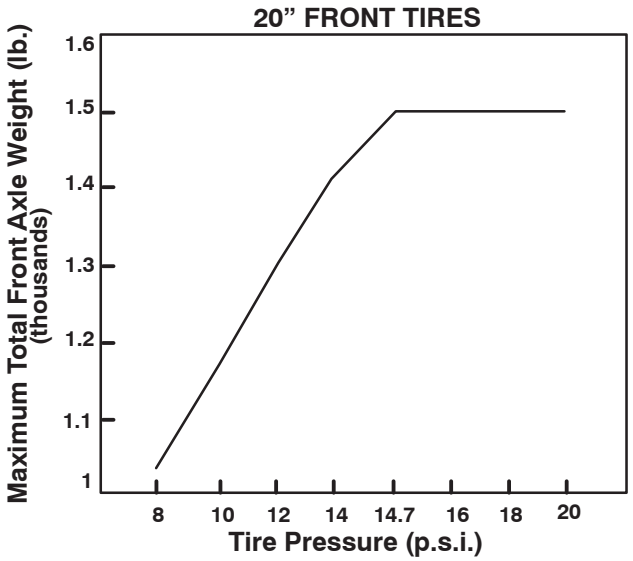

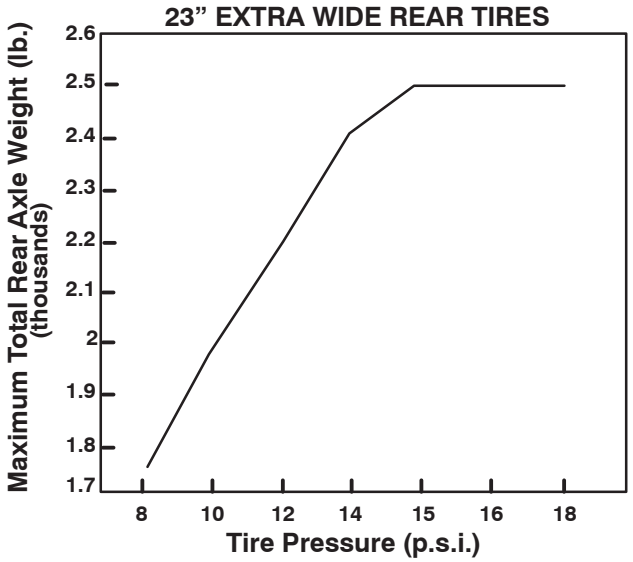

Check Brake Fluid

The brake fluid reservoir is shipped from the factory filled with “DOT 3” brake fluid. Check level before engine is first started and every 8 hours or daily, thereafter.

1. Park machine on a level surface.
2. Fluid level should be up to FULL line on reservoir.
3. If fluid level is low, clean area around cap, remove reservoir cap and fill to proper level. **DO NOT OVERFILL**.

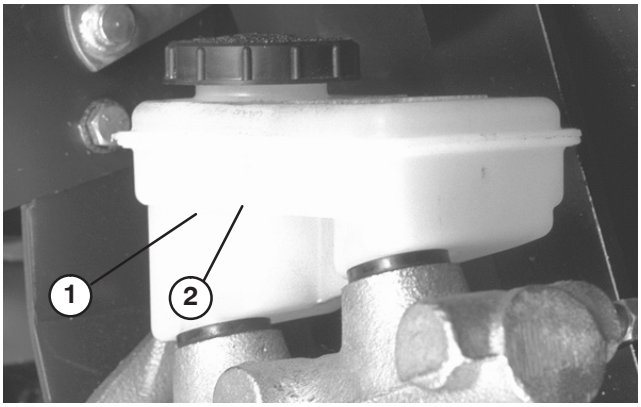

Figure 20

1. Brake fluid reservoir
2. Full line

Operation

Note: Determine the left and right side of the machine from the normal operating position.

Controls

Accelerator Pedal

The accelerator pedal (Fig. 21) gives the operator the ability to vary engine and ground speed of the vehicle, when the transmission is in gear. Depressing the pedal increases engine RPM and ground speed. Releasing pedal will decrease engine RPM and ground speed of the machine.

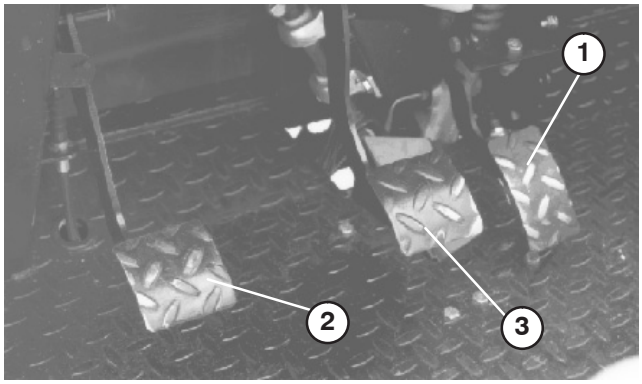

Figure 21

1. Accelerator pedal
2. Clutch pedal
3. Brake pedal

Clutch Pedal

The clutch pedal (Fig. 21) must be fully depressed to disengage clutch when starting engine or shifting transmission gears. Release pedal smoothly when transmission is in gear to prevent unnecessary wear on transmission and other related parts.

Important **Do not ride clutch pedal during operation. Clutch pedal must be fully out or clutch will slip causing friction and wear. Never hold the vehicle stopped on a hill using the clutch pedal. Damage to the clutch may occur.**

Brake Pedal

The brake pedal (Fig. 21) is used to apply service brakes to stop or slow vehicle.

Caution

Worn or misadjusted brakes may result in personal injury. If brake pedal travels to within 1–1/2" of the vehicle floor board, the brakes must be adjusted or repaired.

Gear Shift Lever

Fully depress clutch pedal and move shift lever (Fig. 22) into desired gear selection. A diagram of the shift pattern is indicated below.

Shift Pattern



Important Do not shift the transaxle to the reverse or forward gear unless the vehicle is standing still. Damage to transaxle may occur.

Caution

Down shifting from too high a speed can cause the rear wheels to skid resulting in loss of vehicle control as well as clutch and/or transmission damage. Shift smoothly to avoid grinding gears.

Differential Lock

Allows rear axle to be locked for increased traction. Differential lock (Fig. 22) may be engaged with vehicle in motion. Move lever forward and to the right to engage lock.

Note: Vehicle motion plus a slight turn is required to engage or disengage differential lock.

Caution

Turning with the differential lock on can result in loss of vehicle control. Do not operate with differential lock on when making sharp turns or at high speeds. Refer to using the differential lock.

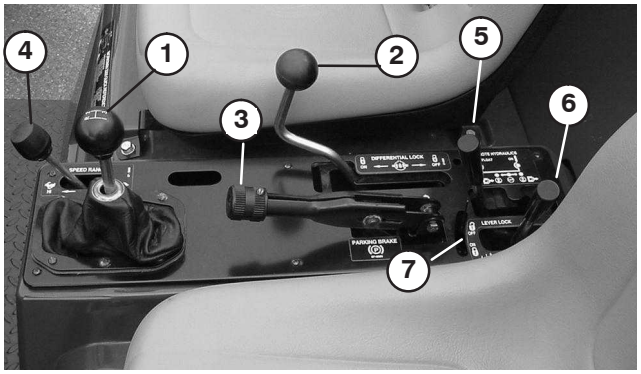

Figure 22

1. Gear shift lever
2. Differential lock
3. Parking brake
4. High–low range shifter5
5. Remote hydraulics control
6. Hydraulic bed lift
7. Hydraulic lift lock

Parking Brake

Whenever the engine is shut off, the parking brake (Fig. 22) must be engaged to prevent accidental movement of the vehicle. To engage the parking brake, pull back on lever. To disengage, push lever forward. Make sure parking brake is released before moving vehicle. If vehicle is parked on a steep grade, make sure parking brake is applied. Also, shift the transmission into 1st gear on a uphill grade or reverse on a down hill grade. Place chocks at the down hill side of wheels.

Hydraulic Lift

Raises and lowers bed. Move rearward to raise, forward to lower (Fig. 22).

Important When lowering bed, hold lever in forward position for 1 or 2 seconds after bed contacts frame to secure it in lowered position. Do not hold the hydraulic lift in either the raise or lower position, for more than 5 seconds, once the cylinders have reached the end of their travel. The hydraulic pump may over heat, resulting in pump damage.

Hydraulic Lift Lock

Locks lift lever so hydraulic cylinders do not operate when vehicle is not equipped with a bed (Fig. 22).

Remote Hydraulic Lever

Controls hydraulic flow to optional quick rear coupler (Fig. 22).

High–Low Range Shifter

Adds three additional speeds for precise speed control (Fig. 22).

- Vehicle must be completely stopped before shifting between High and Low range.
- Shift only on level ground.
- Depress clutch pedal fully.
- Move lever fully forward for High and fully rearward for Low.

HIGH is for higher speed driving on level, dry surfaces with light loads.

LOW is for low speed driving. Use this range when greater than normal power or control is required. For example, steep grades, difficult terrain, heavy loads, slow speed but high engine speed (spraying).

Note: There is a location between HIGH and LOW in which the transaxle is in neither range. This should not be used as a neutral position because the vehicle could move unexpectedly if the HIGH–LOW shifter is bumped and the gear shift lever is in gear.

Tilt Steering Lever

Lever on right side of console allows steering wheel to be adjusted for operator comfort (Fig. 23).

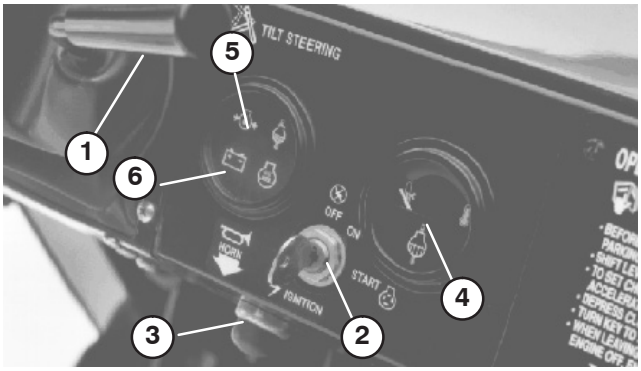

Figure 23

1. Tilt steering lever
2. Ignition switch
3. Horn button
4. Coolant temp. gauge
5. Engine low oil pressure light
6. Charge indicator

Horn Button

Pressing button activates horn (Fig. 23).

Coolant Temperature Gauge

Registers coolant temperature in engine. Operates only when ignition switch is in On position (Fig. 23).

Engine Low Oil Pressure Light

Light glows (Fig. 23) if engine oil pressure drops below a safe level while engine is running. If light flickers or remains ON, stop vehicle, turn off engine and check oil level. If oil level was low, but adding oil does not cause light to go out when engine is restarted, turn engine off immediately and contact your local TORO distributor for assistance.

Important Do not operate vehicle until repair is complete. Failure to observe this precaution may result in damage to the engine.

Ignition Switch

The ignition switch (Fig. 23), used to start and stop the engine, has three positions: OFF, RUN and START. Rotate key clockwise — START position — to engage starter motor. Release key when engine starts. The key will move automatically to the ON position. To shut engine off, rotate key counterclockwise to OFF position.

Charge Indicator

Illuminates when battery is being discharged. If light illuminates during operation, stop vehicle, turn Off engine and check for possible causes, such as alternator belt (Fig. 23).

Important If alternator belt is loose or broken, do not operate vehicle until adjustment or repair is complete. Failure to observe this precaution may result in damage to the engine.

To check operation of warning lights:

- Apply parking brake.
- Turn ignition key to “ON”, but do not start engine. The charge indicator and oil pressure lights should glow. If any light does not function, either a bulb is burned out or there is a malfunction in the system which must be repaired.

Note: Two functions of warning light cluster are not used: glow plug and high water temperature.

Hour Meter

Indicates the total hours of machine operation. The hour meter (Fig. 24) starts to function whenever the key switch is rotated to “ON” position.

Light Switch

Toggle switch (Fig. 24) to activate headlights. Push to turn lights “ON”.

Fuel Gauge

Shows amount of fuel in tank. Operates only when ignition switch is in “ON” position (Fig. 24).

3rd High Lockout Switch

Moving switch (Fig. 24) to slow– – position and removing key will prevent use of third gear when in the High range. Engine will shut off if shift lever is moved to third gear when in High range. Key is installed with teeth pointing downward. Push key in to turn. Key is removable in either position.

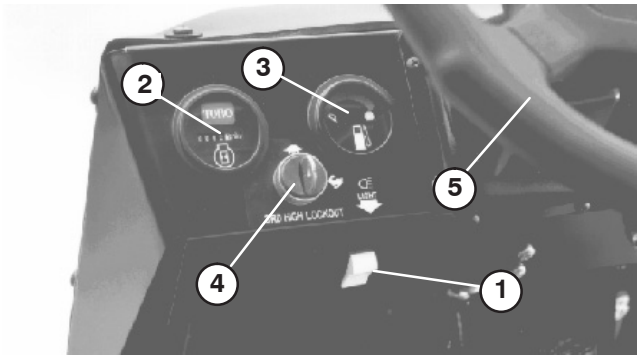

Figure 24

1. Light switch
2. Hour meter
3. Fuel gauge
4. 3rd high lockout switch
5. Steering wheel

Steering Wheel

Turns vehicle. If engine stalls or power assist fails due to a malfunction, vehicle steering will require greater effort (Fig. 24).

Passenger Hand Hold

On dashboard (Fig. 25).

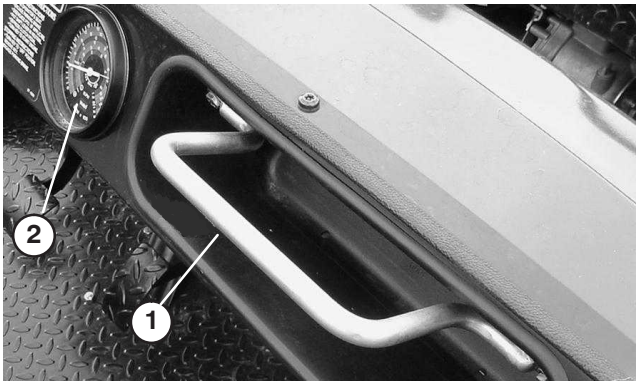

Figure 25

1. Passenger hand hold
2. Tachometer (optional)

Tachometer–Optional

Indicates engine RPM. Gear selection graphics indicates speed (Fig. 25).

Pre–starting Checks

Safe operation begins before taking the vehicle out for a day's work. You should check these items each time:

- Check tire pressure.

Note: These tires are different than car tires, they require less pressure to minimize turf compaction and damage.

- Check all fluid levels and add the appropriate amount of Toro specified fluids, if any are found to be low.
- Check brake pedal operation.
- Check to see that the lights and horn are working.
- Turn steering wheel to the left and right to check steering response.
- Check for oil leaks, loose parts and any other noticeable malfunctions. Make sure engine is off and all moving parts have stopped before checking for oil leaks, loose parts and other malfunctions.

If any of the above items are not correct, notify your mechanic or check with your supervisor before taking the vehicle out for the day. Your supervisor may want you to check other items on a daily basis, so ask what your responsibilities are.

Starting Engine

1. Sit on operator's seat and engage parking brake.
2. Disengage PTO (if so equipped) and return hand throttle lever to OFF position (if so equipped).
3. Move shift lever to NEUTRAL position and depress clutch pedal.
4. Keep foot off accelerator pedal.

- In extremely cold weather (below 0 degrees F) – fully depress and release the accelerator pedal several times before trying to start engine.
- ,If engine is hot – depress and hold the accelerator pedal about half way down while cranking engine.
- If engine is flooded – fully depress accelerator pedal and hold it to the floor until the engine starts. Never pump the accelerator pedal.

5. Insert key into ignition switch and rotate it clockwise to start the engine. Release key when engine starts.

Important **To prevent overheating of the starter motor, do not engage starter longer than 15 seconds. After 15 seconds of continuous cranking, wait 60 seconds before engaging starter motor again.**

Driving Vehicle

1. Release parking brake.
2. Fully depress clutch pedal.
3. Move gear shift lever to 1st gear.
4. Release clutch pedal smoothly while depressing accelerator pedal.
5. When vehicle gains enough speed, remove foot from accelerator pedal, fully depress clutch pedal, move gear shift lever to next gear and release clutch pedal while depressing accelerator pedal. Repeat procedure until desired speed is attained. Stop vehicle before shifting to reverse and forward.

Note: Avoid long periods of engine idling.

Note: Leaving ignition switch in "ON" position for long periods of time without running engine will discharge battery.

Important Do not hold front wheels turned against the right or left stops for longer than 5 seconds. The hydraulic pump may over heat, resulting in pump or steering gear damage.

6. Do not attempt to push or tow vehicle to get it started. Damage to drive train could result.

Stopping Vehicle

To stop machine, remove foot from accelerator pedal, depress clutch pedal, then depress brake pedal.

Stopping Engine

To stop engine, rotate ignition key to OFF and engage parking brake. Remove key from switch to prevent accidental starting.

New Vehicle Break–in

Your Workman is ready for work. To provide proper performance and long vehicle life, follow these guidelines for the first 100 operating hours.

- Check the fluid and engine oil levels regularly and be alert for indications of overheating in any component of the vehicle.
- After starting a cold engine, let it warm up for about 15 seconds before shifting into gear.
- Avoid racing the engine.
- To assure optimum performance of the brake system, burnish (break–in) the brakes before use. To burnish brakes: Operate the vehicle at full speed for 3 minutes, apply the brakes for 30 seconds while engaging the traction pedal. Repeat these steps 20 to 30 times. To verify the brakes are completely burnished remove a rear tire and inspect the brake drum for residue. The residue color should be light grey to almost white color.
- Vary vehicle speeds during operation. Avoid excessive idling. Avoid fast starts and quick stops.
- A break–in oil for engine is not required. Original engine oil is the same type specified for regular oil changes.
- Refer to Maintenance section of Operator's Manual for any special low hour checks.

Check Interlock System

The purpose of the interlock system is to prevent the engine from cranking or starting unless the clutch pedal is depressed.

Caution

If safety interlock switches are disconnected or damaged the machine could operate unexpectedly causing personal injury.

- **Do not tamper with the interlock switches.**
- **Check the operation of the interlock switches daily and replace any damaged switches before operating the machine.**
- **Replace switches every two years or 1500 hours, whichever occurs first, regardless of whether they are operating properly or not.**

To verify clutch interlock switch operation:

1. Sit on operator's seat and engage parking brake. Move shift lever to NEUTRAL position.
2. Without depressing clutch pedal, rotate key clockwise to start position.
3. If engine cranks or starts, there is a malfunction in the interlock system that must be repaired before operating vehicle.

Refer to Attachment Operator's Manual for procedure on checking attachment interlock system.

Operating Characteristics

The vehicle is designed with safety in mind. It has four wheels for added stability. It uses familiar automotive style controls, including the steering wheel, brake pedal, clutch pedal, accelerator pedal, and gear shifter. It is important to remember, however, that this vehicle is not a passenger car. It is a work vehicle and is designed for off road use only.

Warning

The WORKMAN is an off–highway vehicle only, and is not designed, equipped, or manufactured for use on public streets, roads or highways.

The vehicle has special tires, low gear ratios, a locking differential, and other features that give it extra traction. These features add to the versatility of the vehicle but, they can also get you into dangerous situations. You must keep in mind that the vehicle is not a recreation vehicle. It is not an all terrain vehicle. And, it is definitely not meant for "stunt driving" or "horsing around". It is a work vehicle, not a play vehicle. Children should not be allowed to operate the vehicle. Anyone who operates the vehicle should have a motor vehicle license.

If you are not experienced at driving the vehicle, practice driving it in a safe area away from other people. Be sure you are familiar with all the vehicle's controls, particularly those used for braking, steering and transmission shifting. Learn how your vehicle handles on different surfaces. Your operating skills will improve with experience, but as in operating any vehicle, take it easy as you begin. Be sure you know how to stop quickly in an emergency. If you need help, ask your supervisor for assistance.

Many factors contribute to accidents. You have control over several of the most important. Your actions, such as driving too fast for conditions, braking too fast, turning too sharp, and combinations of these, are frequent cause of accidents.

One of the major causes of accidents is fatigue. Be sure to take occasional breaks. It is very important that you stay alert at all times.

Never operate the vehicle, or any equipment, if you are under the influence of alcohol or other drugs. Even prescription drugs and cold medicines can cause drowsiness. Read the label on the medicine or check with your doctor or pharmacist if you are unsure about a certain medication.

One of the most important rules to follow is to go slower in unfamiliar areas. It is surprising how much damage and injury common things can cause. Tree branches, fences, wires, other vehicles, tree stumps, ditches, sand traps, streams, and other things found in most parks and golf courses can be hazardous to the operator and passenger.

Avoid driving when it is dark, especially in unfamiliar areas. If you must drive when it is dark, be sure to drive cautiously, use the head lights, and even consider adding additional lights.

Passengers

Whenever you have a passenger riding in the vehicle make sure he or she is holding on securely. Drive slower and turn less sharply because your passenger does not know what you are going to do next and may not be prepared for turning, stopping, accelerating, and bumps.

You and your passenger should remain seated at all times, keeping arms and legs inside the vehicle. The operator should keep both hands on steering wheel, whenever possible and passenger should use hand holds provided.

There should never be passengers in the dump box or on any attachments. The vehicle is meant to have one driver and only one passenger–no more.

Speed

Speed is one of the most important variables leading to accidents. Driving too fast for the conditions can cause you to lose control and have an accident. Speed can also make a minor accident worse. Driving head–on into a tree at slow speed can cause injury and damage, but, driving into a tree at high speed can destroy the vehicle and kill you and your passenger.

Never drive too fast for the conditions. If there is any doubt about how fast to drive, slow down.

When using heavy attachments (more than 1000 pounds), such as sprayers, top dressers, or spreaders, etc., operating speeds should be restricted by moving 3rd high lockout switch to slow–  – position.

Turning

Turning is another important variable leading to accidents. Turning too sharply for the conditions can cause the vehicle to lose traction and skid, or even tip over.

Wet, sandy and slippery surfaces make turning more difficult and risky. The faster you are going, the worse this situation becomes so, slow down before turning.

During a sharp turn at higher speeds, the inside rear wheel may lift off of the ground. This is not a flaw in the design, it happens with most four wheel vehicles including passenger cars. If this happens, you are turning too sharply for the speed at which you are traveling. Slow down!

Braking

It is good practice to slow down before you get near an obstacle. This gives you extra time to stop or turn away. Hitting an obstacle can damage the vehicle and its contents. More important, it can injure you and your passenger.

Gross vehicle weight has a major impact on your ability to stop and/or turn. Heavier loads and heavier attachments make a vehicle harder to stop or turn. The heavier the load, the longer it takes to stop.

The braking characteristics also change with no bed or attachment on the vehicle. Fast stops may cause the rear wheels to lock up before the front wheels lock up, which may affect the control of the vehicle. It is a good idea to decrease vehicle speed with no bed or attachment.

Turf and pavement are much slipperier when they are wet. It can take 2 to 4 times as long to stop on wet surfaces as on dry surfaces.

If you drive through standing water deep enough to get the brakes wet, they will not work well until they are dry. After driving through water, you should test the brakes to make sure they work properly. If they do not, drive slowly in first gear while putting light pressure on the brake pedal. This will dry the brakes out.

Do not downshift for braking on icy or slippery surfaces (wet grass) or while going down a hill because engine braking may cause skidding and loss of control. Shift to a lower gear before starting down a hill.

Tipovers

The TORO WORKMAN is equipped with a roll bar, hip restraints, shoulder restraints and hand hold. The ROPS system used on the vehicle will reduce the risk of serious or fatal injury in the unlikely event of a tipover, although the system cannot protect the operator from all possible injuries.



TIPOVER CAN
OCCUR IF TRUCK IS
IMPROPERLY
OPERATED.
INJURY OR DEATH
COULD RESULT

Replace a damaged ROPS, do not repair or revise. Any alteration of ROPS must be approved by manufacturer.

The best way to prevent accidents involving utility vehicles is through continuous supervision and training of operators and paying constant attention to the area in which vehicle is being operated.

The best way for operators to prevent serious injury or death to themselves or others, is to familiarize themselves with the proper operation of the utility vehicle, to stay alert and to avoid actions or conditions which could result in a accident. In the event of a tip over, the risk of serious injury or death will be reduced if the operator is using the ROPS system and follows the instructions provided.

IN CASE OF
TIPOVER

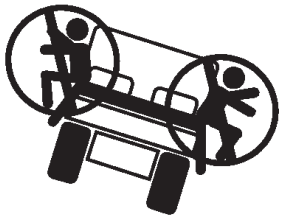

DON'T JUMP



OPERATOR HOLD
TIGHT AND BRACE
FEET



PASSENGER HOLD
HIP RESTRAINT AND
HAND HOLD, BRACE
FEET

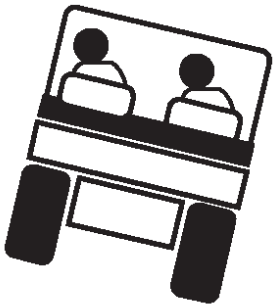

Hills

Warning

Tipping or rolling the vehicle on a hill will cause serious personal injury.

- **If engine stalls or you lose headway on a hill, never attempt to turn vehicle around.**
- **Always back straight down a hill in reverse gear.**
- **Never back down in neutral or with the clutch depressed, using only the brakes.**
- **Never drive across a steep hill, always drive straight up or down.**
- **Avoid turning on a hill**
- **Don't "drop the clutch" or slam on the brakes. Sudden speed change can initiate tipover.**

Use extra care when on hills. Never go on hills that are extremely steep. Stopping while going down a hill will take longer than on level ground. Turning while going up or down a hill is more dangerous than turning on the level. Turns while going down hill, especially with the brakes on, and, turning up hill while traversing a hill are particularly dangerous. Even at a slow speed and without a load, tip overs are more likely if you turn on a hill.

Slow down and shift into a lower gear before starting up or down a hill. If you have to turn while on a hill, do it as slowly and cautiously as possible. Never make sharp or fast turns on a hill.

If you stall or begin to lose headway while climbing a steep hill, quickly apply the brakes, shift to neutral, restart the engine and shift to reverse. At idle speed, engine and transaxle drag will aid the brakes in controlling the vehicle on the hill and help you back down the hill more safely.

Reduce the weight of the load if it is a steep hill or if the load has high center of gravity. Remember, loads can shift. Secure them.

Note: The Workman has excellent hill climbing ability. The differential lock will increase this ability. Hill climbing traction can also be increased by adding weight to the rear of the vehicle in one of the following ways:

- Adding weight to inside of box, making sure it is secured.
- Mounting wheel weights to rear wheels.
- Adding liquid ballast (calcium chloride) to rear tires.
- Traction will increase with no passenger in front seat.

Loading And Dumping

The weight and position of the cargo and passenger can change the vehicle center of gravity and vehicle handling. To avoid loss of control resulting in personal injury, follow these guidelines.

Do not carry loads which exceed the load limits described on the vehicle weight label.

Warning

The bed will lower whenever the dump lever is pushed down, even when the engine is off. Turning off the engine will NOT prevent the box from lowering. Always place the safety support on extended lift cylinder to hold box up if you are not going to lower it right away.

Warning

When lowering the box it is possible for you or others to get their hands or other body parts in the wrong spot and have them crushed. Take extra care that no one will get hurt. Also, do not dump on anyone's feet. It may seem funny but, it can be dangerous.

The vehicle has several combinations of boxes, platforms, and attachments available. These can be used in various combinations that allow for maximum capacity and versatility. The full sized box is 55 inches wide by 65 inches long and can hold up to 2000 pounds of evenly distributed cargo.

Loads vary in how they are distributed. Sand spreads out evenly and quite low. Other items, such as bricks, fertilizer or landscape timbers, stack higher in the box.

The height and weight of the load has a significant influence on tip overs. The higher a load is stacked, the more likely the vehicle is to tip over. You may find that 2000 pounds stacks too high for safe operation. Reducing

the total weight is one way to reduce the risk of a tip over. Distributing the load as low as possible is another way to reduce the risk of a tip over.

If the load is positioned toward one of the sides, it will make the vehicle much more likely to tip over on that side. This is especially true when turning if the load is on the outside of the turn.

Never position heavy loads behind the rear axle. If the load is positioned so far to the rear that it is behind the rear axle, it will reduce the weight on the front wheels and this will reduce steering traction. With the load all the way to the back, the front wheels can even come off of the ground when going over bumps or up a hill. This will result in a loss of steering and may lead to the vehicle tipping over.

As a general rule, position the weight of the load evenly from front to rear and evenly from side to side.

If a load is not secured, or you are transporting a liquid in a large container such as a sprayer, it can shift. This shifting happens most often while turning, going up or down hills, suddenly changing speeds or while driving over rough surfaces. Shifting loads can lead to tip overs. Always secure loads so that they do not shift. Never dump the load while the vehicle is sideways on the hill.

Heavy loads increase stopping distance and reduce your ability to turn quickly without tipping over.

The rear cargo space is intended for load carrying purposes only, not for passengers.

Caution

When raising or lowering bed or implement, hydraulic oil will bypass over a relief valve when cylinders reach the end of their travel, stopping power assist to steering gear and increasing steering effort. Release lift levers to NEUTRAL after bed or implement is raised or lowered, to regain assist to power steering.

Using The Differential Lock

The differential lock increases the vehicle's traction by locking the rear wheels so one wheel will not spin out. This can help when you have heavy loads to haul on wet turf or slippery areas, going up hills and on sandy surfaces. It is important to remember however, that this extra traction is only for temporary limited use. Its use does not replace the safe operation, already discussed concerning steep hills and heavy loads.

The differential lock causes the rear wheels to spin at the same speed. When using differential lock your ability to make sharp turns is somewhat restricted and may scuff the turf. Use the differential lock only when needed, at slower speeds and only in first or second gear.

Warning

Tipping or rolling the vehicle on a hill will cause serious injury.

- **The extra traction available with the differential lock can be enough to get you into dangerous situations such as climbing slopes that are too steep to turn around. Be extra careful when operating with the differential lock on, especially on steeper slopes.**
- **If the differential lock is on when making a sharp turn at a higher speed and inside rear wheel lifts off the ground, there may be a loss of control which could cause vehicle to skid (Refer to section on Differential Lock Operation). Use the differential lock only at slower speeds.**

Four Wheel Drive

Four Wheel Drive Only

The "Automatic on Demand" four wheel drive feature, on this vehicle does not require operator activation. The front wheel drive is not engaged (no power delivered to front wheels) until the rear wheels begin to lose traction. The bi–directional clutch senses the rear wheels slipping, engages the front wheel drive and delivers power to the front wheels. The four wheel drive system continues to deliver power to the front wheels until the rear wheels have enough traction to move the vehicle without slipping. Once this occurs, the system stops delivering power to the front wheels and the handling characteristics become similar to that of a two wheel drive vehicle. The four wheel drive system functions in both froward and reverse, however, when turning the the rear wheels will slip slightly more before power is delivered to the front wheels.

Warning

Tipping or rolling the vehicle on a hill will cause serious injury.

- **The extra traction available with the four wheel drive feature can be enough to get you into dangerous situations such as climbing slopes that are too steep to turn around. Be careful when operating, especially on steeper slopes.**

Transporting Vehicle

For moving the vehicle long distances, a trailer should be used. Make sure the vehicle is secured to the trailer. Refer to Figures 26 and 27 for location of tie down points.

Towing Vehicle

In case of emergency, the vehicle can be towed for a short distance. However, Toro does not recommend this as a standard procedure.

Warning

Towing at excessive speeds could cause vehicle to lose steering control. Never tow vehicle faster than 5 MPH.

Towing the vehicle is a two person job. Affix a tow line to holes in front frame member. Move shifter to Neutral and release parking brake. If machine must be moved a considerable distance, transport it on a truck or trailer.

Note: The power steering will not function, making it difficult (increase effort) to steer.

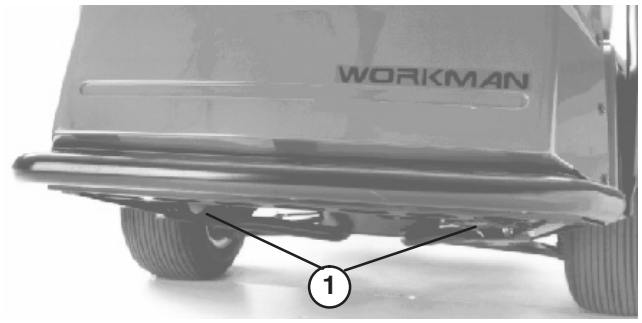

Figure 26

1. Eye holes in frame

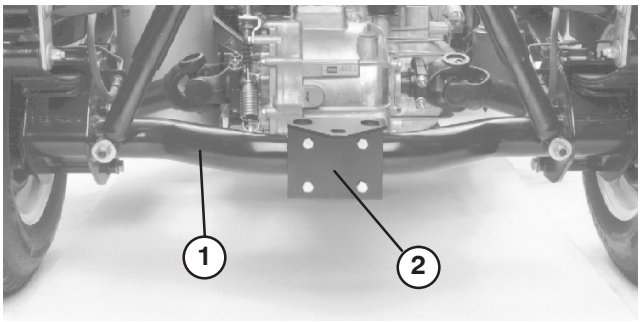

Figure 27

1. Axle tube
2. Hitch plate

Trailer Towing

The Workman is capable of pulling trailers and attachments of greater weight than the vehicle itself.

Several types of tow hitches are available for the Workman, depending on your application. Contact your Authorized TORO Distributor for details.

When equipped with a tow hitch bolted onto rear axle tube, your Workman can tow trailers or attachments with a Gross Trailer Weight (GTW) up to 1500 lbs. Always load a trailer with 60% of the cargo weight in the front of the trailer. This places approximately 10% (200 lbs. max.) of the Gross Trailer Weight (GTW) on the tow hitch of the vehicle.

When towing either standard tongue or 5th wheel trailers having a Gross Trailer Weight (GTW) in excess of 1500 lbs., use either a chassis mounted draw bar hitch (rated for 3500 lb. GTW) or 5th wheel kit with brakes. Trailer brakes are required whenever a trailer over 1500 lbs. GTW is towed behind a Workman vehicle.

When hauling cargo or towing a trailer (attachment), do not overload your vehicle or trailer. Overloading can cause poor performance or damage to the brakes, axle, engine, transaxle, steering, suspension, body structure or tires.

Important To reduce potential for drive line damage, use low range.

When towing 5th wheel attachments, like a fairway aerator, always install the ”wheely bar”(included with the 5th wheel kit) to prevent the front wheels from lifting off the ground if the towed attachments movement is suddenly impaired.

Remote Hydraulic Control

Model 07211TC only

The remote hydraulic control kit supplies “live” hydraulic power from the vehicle pump whenever the engine is running. The power can be used through the the quick couplers at the rear of the vehicle.

CONTROL LEVER POSITIONS

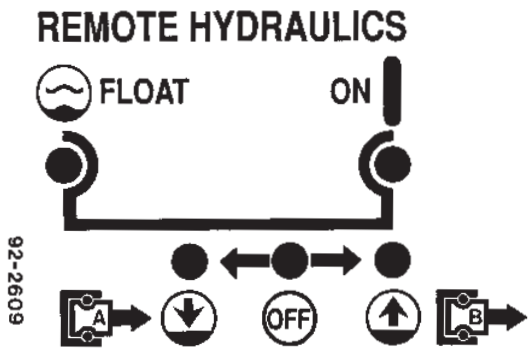

Off Position

This is the normal position for the control valve when it is not being used. This position allows the oil leaving the dump valve to flow through the remote hydraulic valve to

the power steering circuit. In this position the work ports of the control valve are blocked and any load will be held by the check valves in both directions.

Raise (Quick Coupler ”B” Position)

This is the position which will lift the rear hitch attachment or apply pressure to quick coupler ”B”. This also allows return oil from Quick coupler ”A” to flow back into the valve and then out to the power steering circuit. This is a momentary position and when the lever is released it spring returns to the center off position.

Important Use double acting cylinders only. Using a single acting cylinder does not allow return flow of hydraulic oil and makes steering more difficult. Using a single acting cylinder can lower oil level in transaxle and cause damage to hydraulic pump and transaxle.

On Position

This position is similar to Raise (quick coupler ”B” position). It also directs oil to quick coupler ”B” except that the lever is held in this position by a detent notch in the control panel. This allows oil to flow continuously to equipment that uses a hydraulic motor. This position must only be used on attachments with a hydraulic motor attached.

Note: If hydraulic motor is used, it may see 1000 psi back pressure.

Important If used with a hydraulic cylinder or no attachment, the Raise or On position causes the oil flow to go over a relief valve which can damage the hydraulic system. Additionally this condition does not allow return flow to supply the power steering circuit, which makes steering more difficult. Use these positions only momentarily or with a motor attached.

Lower (Quick Coupler ”A” Position)

This position will lower the rear hitch attachment or apply pressure to quick coupler ”A”. This also allows return oil from quick coupler ”B” to flow back into the valve and then out to the power steering circuit. This is a momentary position and when the lever is released it spring returns to the center off position. Momentarily holding and then releasing the control lever in this position will provide flow to quick coupler ”A” which provides power down on the rear hitch. When released, it will hold the down pressure on the hitch.

Important If used with a hydraulic cylinder, holding the control lever in the lower position causes the oil flow to go over a relief valve which can damage the hydraulic system.

Float Position

This valve position allows oil to flow in and out of the work ports and is connected to the inlet and outlet ports at the same time. This allows for attachments as the rear hitch to ”float” up and down. The same pressure is applied to both quick couplers due to back pressure from the steering circuit.

Caution

Use caution when moving lever to the float position because it will allow rear implement to lower unimpeded.

Important Check hydraulic oil level after installation of attachment. Check operation of attachment by cycling attachment several times to purge air from system, then recheck hydraulic oil level. Attachment cylinder will slightly affect transaxle oil level. Operation of vehicle with low oil level can damage pump, remote hydraulics, power steering and vehicle transaxle.

Caution

Hydraulic fluid escaping under pressure can have sufficient force to penetrate skin and do serious damage. Care must be used when connecting or disconnecting hydraulic quick couplers. Stop engine, apply parking brake, lower attachment and place remote hydraulic valve in float detent position to relieve hydraulic pressure before connecting or disconnecting quick couplers.

Quick Coupler Operation

Connection

Important Clean dirt from quick couplers before connecting. Dirty couplers can introduce contamination to hydraulic system.

Insert hose nipple into coupler until it snaps into position.

Note: When attaching remote hydraulic cylinders to the quick couplers, determine which side of the remote cylinder requires pressure, then attach that hose to quick coupler “B”. Only connect double acting cylinders (two hoses).

Disconnection

Pull hose firmly from coupler

Important Clean and install dust plug and dust covers to quick coupler ends when not in use.

Remote Hydraulic Control Trouble Shooting:

- Difficulty in connecting or disconnecting quick couplers.
    - Pressure not relieved (Quick coupler under pressure).
    - Engine running.
    - Remote hydraulic valve not placed in float.
- Power steering hard.
    - Remote valve not in neutral or float position.
    - Remote hydraulic valve linkage out of adjustment.
    - Hydraulic oil level low.
    - Hydraulic oil hot.
- Hydraulic leaks.
    - Fittings loose.
    - Fitting missing o–ring.
- Attachment does not function.
    - Quick couplers not fully engaged.
    - Quick couplers are interchanged.
- Squealing noise.
    - Remote valve left in ON detent position causing hydraulic oil to flow over relief valve.

Maintenance

Note: Determine the left and right side of the machine from the normal operating position.

Service Interval Chart

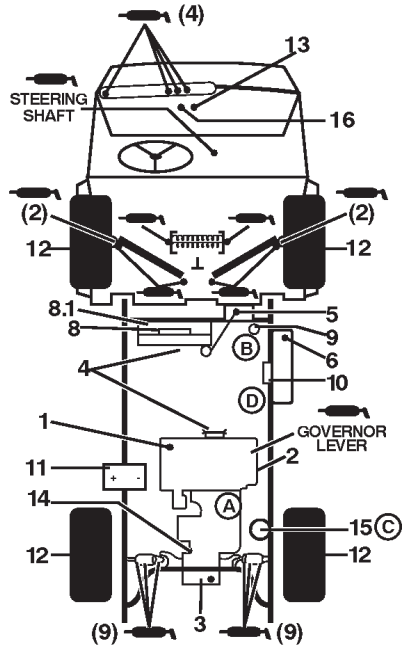

WORKMAN 3200 QUICK REFERENCE AID

CHECK/SERVICE

1. ENGINE OIL LEVEL
2. ENGINE OIL DRAIN
3. TRANSAXLE/HYDRAULIC OIL LEVEL (DIP STICK)
4. BELTS (GOVERNOR, WATER PUMP, HYDRAULIC PUMP)
5. COOLANT LEVEL FILL
6. FUEL (UNLEADED FUEL ONLY)
7. GREASE POINTS (34) — 100 HRS.
8. RADIATOR SCREEN

8.1. RADIATOR SCREEN CLEANOUT DOOR

9. AIR CLEANER
10. FUEL FILTER
11. BATTERY
12. TIRE PRESSURE - MAXIMUM 20 PSI FRONT, 18 PSI REAR (24" TIRE)
13. FUSES (LIGHTS 10 AMP, IGNITION 7.5 AMP, DASH ACCESSORIES 7.5 AMP)
14. HYDRAULIC STRAINER
15. HYDRAULIC OIL FILTER
16. BRAKE FILLER

FLUID SPECIFICATIONS/CHANGE INTERVALS

SEE OPERATOR'S MANUAL FOR INITIAL CHANGES	FLUID TYPE	CAPACITY L	CAPACITY QT	CHANGE INTERVALS FLUID	CHANGE INTERVALS FILTER	FILTER PART NO.
ENGINE OIL 10°C TO 40°C/ 14°F TO 104°F	SAE 10W–30 SG, SH or SJ	3.2	3.4	100 HRS.	100 HRS.	67-4330 (A)
TRANS./HYDRAULIC OIL	DEXRON III ATF	7.1	7.5	800 HRS.	800 HRS.	54-0110 (C)
AIR CLEANER	CLEAN EVERY 50 HOURS				200 HRS.	93–2195 (B)
FUEL/FUEL FILTER	UNLEADED	26.5	7 GAL	—	400 HRS.	18-1520 (D)
COOLANT 50/50 ETHYLENE GLYCOL WATER		3.3	3.5	1200 HRS.	—	—
STRAINER				CLEAN 800 HRS.		87-3990

FOR HEAVY DUTY OPERATION, MAINTENANCE SHOULD BE PERFORMED TWICE AS FREQUENTLY.

2 Wheel Drive Shown

Greasing Bearings And Bushings

The vehicle has grease fittings that must be lubricated regularly with No. 2 General Purpose Lithium Base Grease. If machine is operated under normal conditions, lubricate all bearings and bushings after every 100 hours of operation. More frequent lubrication is required if used for heavy duty vehicle operations.

The grease fitting locations and quantities are: Tie rod ends (4) (Fig. 28), Front ball joints (4) (Fig. 28), Rear drive shafts (18) (Fig. 29), Mid drive shaft – 4 wd only (3) (Fig. 30) Pedal Pivots (4) (Fig. 31); Steering shaft (1) (Fig. 32), Front pivot bushings (2) (Fig. 33) and Throttle pivot (1) (Fig. 34).

Important When greasing drive shaft universal shaft bearing crosses, pump grease until it comes out of all 4 cups at each cross.

1. Wipe grease fitting clean so foreign matter cannot be forced into the bearing or bushing.
2. Pump grease into the bearing or bushing.
3. Wipe off excess grease.

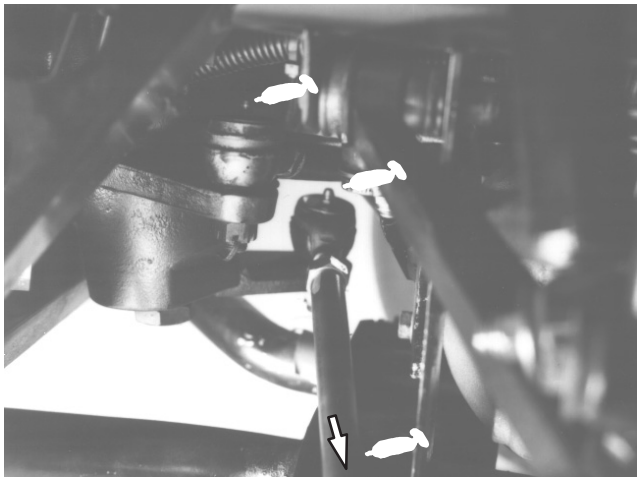

Figure 28

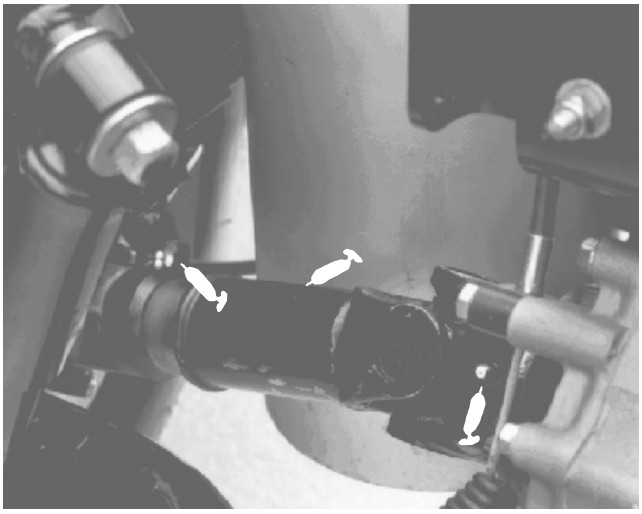

Figure 29

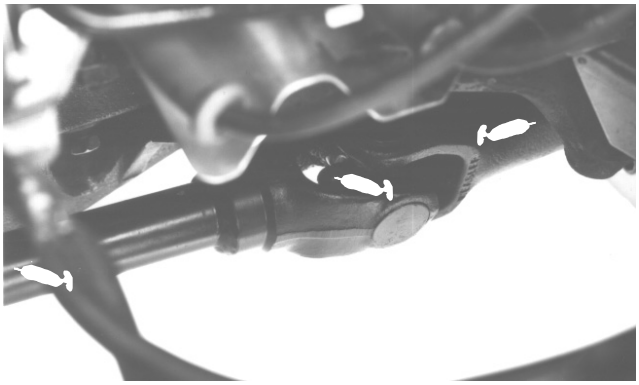

Figure 30

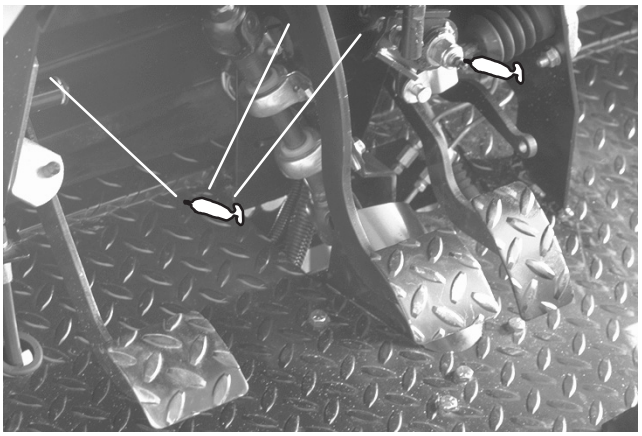

Figure 31



Figure 32



Figure 33

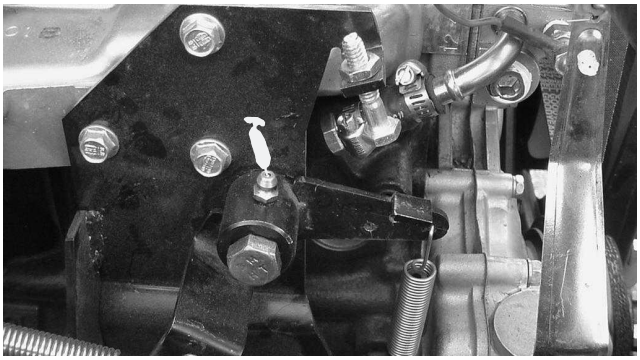

Figure 34

Maintenance

Recommended Maintenance Schedule

Maintenance Service Interval	Maintenance Procedure
After first 10 hours	• Check cable adjustments • Torque wheel lug nuts • Replace transaxle filter
After first 50 hours	• Replace the engine oil and filter.
Every 50 hours	• Check the battery fluid level. • Check the battery cable connections. • Service the air cleaner.
Every 100 hours	• Lubricate all grease fittings • Inspect condition and wear of tires • Check front differential oil level (4WD) • Replace engine oil and filter • Inspect cooling system hoses • Check governor oil level
Every 200 hours	• Check cable adjustments • Check alternator, governor and fan belts • Change air cleaner filter • Check front axle CV boot joint (4WD) • Check engine RPM (idle and full throttle) • Torque wheel lug nuts
Every 400 hours	• Check front wheel alignment • Inspect service and parking brakes • Inspect fuel lines • Replace fuel filter • Adjust valves • Replace spark plugs and check timing
Every 800 hours	• Replace transaxle filter • Change transaxle oil • Clean transaxle strainer • Pack front wheel bearings • Change front differential oil (4WD)
Every 1200 hours or 2 years (whichever occurs first)	• Replace all interlock switches • Coolant System – flush/replace fluid • Change brake fluid
Every 2000 hours or 2 years (whichever occurs first)	• Replace engine timing belt

[1]immediately after **every** washing, regardless of the interval listed

Important Refer to your engine operator's manual for additional maintenance procedures.

Daily Maintenance Checklist

Duplicate this page for routine use.

Maintenance Check Item	For the week of:						
	Mon.	Tues.	Wed.	Thurs.	Fri.	Sat.	Sun.
Check the safety interlock operation.							
Check service and park brake operation.							
Check the fuel level.							
Check the accelerator operation							
Check the clutch and shifter operation							
Check the engine oil level.							
Check the transaxle oil level.							
Check the cooling system fluid level[1]							
Check the brake fluid level							
Check the air cleaner[2]							
Check for any unusual engine noises.							
Check for any unusual operating noises.							
Check the tire pressure.							
Check the radiator screen/clean out door[2]							
Check the hydraulic hoses for damage.							
Check for fluid leaks.							
Check the instrument operation.							
Lubricate all grease fittings.[3]							
Touch up damaged paint.							

[1]Inspect at overflow tank

[2]More often when conditions are dry

[3]immediately after **every** washing, regardless of the interval listed

Notation for Areas of Concern

Inspection performed by:		
Item	**Date**	**Information**
1		
2		
3		
4		
5		
6		
7		
8		
9		

Caution

If you leave the key in the ignition switch, someone could accidently start the engine and seriously injure you or other bystanders.

Remove the key from the ignition before you do any maintenance.

Heavy Duty Operation

Important If the vehicle is subjected to any of the conditions listed below, maintenance should be performed twice as frequently:

- Desert operation
- Cold climate operation (below 32 degrees F)
- Trailer towing
- Frequent operation on dusty roads
- Construction work
- After extended operation in mud, sand, water, or similar dirty conditions, have your brakes inspected and cleaned as soon as possible. This will prevent any abrasive material from causing excessive wear.
- Under frequent heavy duty operating conditions, lubricate all grease fittings.

Caution

Only qualified and authorized personnel shall be permitted to maintain, repair, adjust or inspect the vehicle.

Avoid fire hazards and have fire protection equipment present in the work area. Do not use an open flame to check level or leakage of fuel, battery electrolyte or coolant. Do not use open pans of fuel or flammable cleaning fluids for cleaning parts.

Many of the subjects covered in this maintenance section require raising and lowering the bed. The following precautions must be taken or serious injury or death could result.

Warning

Before servicing or making adjustments to the machine, stop engine, set parking brake and remove key from ignition switch. Any load material must be removed from bed or other attachment before working under raised bed. Never work under a raised bed without positioning safety support on a fully installed cylinder rod.

After maintenance is completed, remove safety support, slide it onto storage stud and lower bed.

Using Bed Safety Support

1. Raise bed until lift cylinders are fully extended.
2. Remove bed support from storage brackets on back of ROPS panel (Fig. 35).

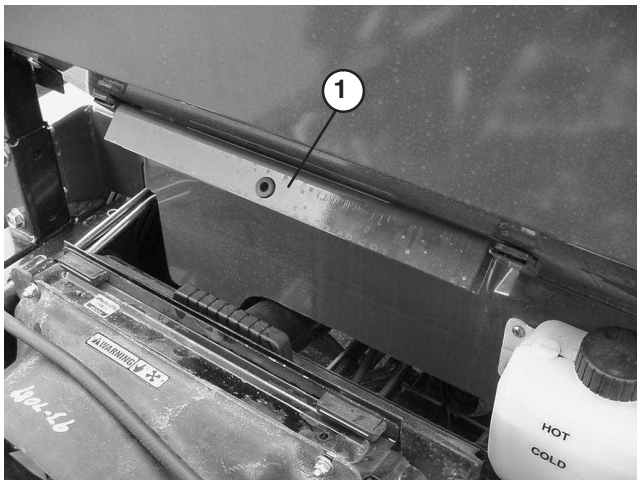

Figure 35

1. Bed support

3. Push bed support onto cylinder rod, making sure support end tabs rest on end of cylinder barrel and on cylinder rod end (Fig. 36).

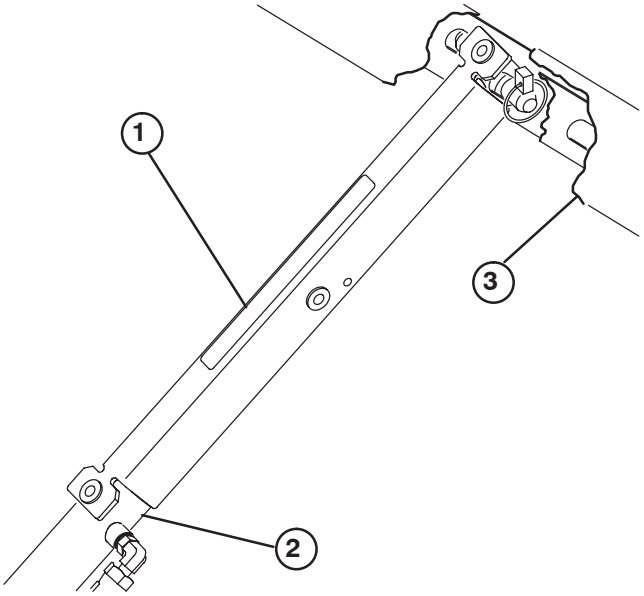

Figure 36

1. Bed support
2. Cylinder barrel
3. Bed

4. To store bed support, remove bed support from cylinder and insert into brackets on back of ROPS.
5. Always install or remove bed support from outside of bed.
6. Do not try to lower bed with bed safety support on cylinder.

Jacking Vehicle

Danger

A vehicle on a jack may be unstable and slip off of the jack, injuring anyone beneath it.

- **Do not start the vehicle while the vehicle is on a jack.**
- **Always remove the key from the switch before getting off of the vehicle.**
- **Block the tires when the vehicle is on a jack.**

1. Do not start engine while vehicle is on jack, because engine vibration or wheel movement could cause vehicle to slip off jack.
2. Do not work under vehicle without jack stands supporting it. The vehicle could slip off jack, injuring any one beneath it.
3. The jacking point at the front of the vehicle is under the front center frame support and at the rear it is under the axle tube.
4. When jacking up front of vehicle, always place a 2x4 block (or similar material) between jack and vehicle frame.

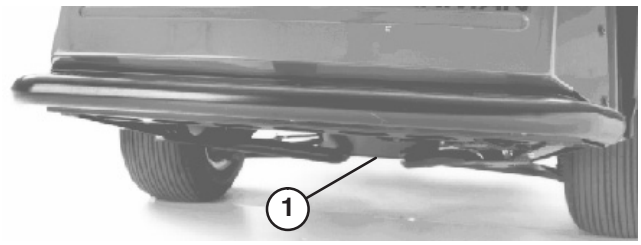

Figure 37

1. Front jacking point

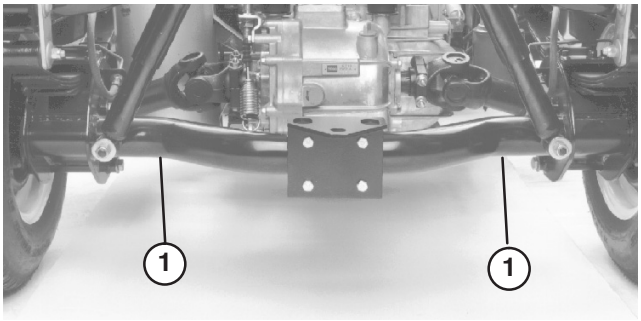

Figure 38

1. Rear jacking points

General Air Cleaner Maintenance Practices

- Inspect air cleaner and hoses periodically to maintain maximum engine protection and to ensure maximum service life.
- Check air cleaner body for damage which could possibly cause an air leak. Replace a damaged air cleaner body.
- Clean the air cleaner filter every 50 hours and change every 200 hours (more frequently in extreme dusty or dirty conditions).

Servicing Air Cleaner

1. Release latches securing air cleaner cover to air cleaner body. Separate cover from body. Clean inside of air cleaner cover.

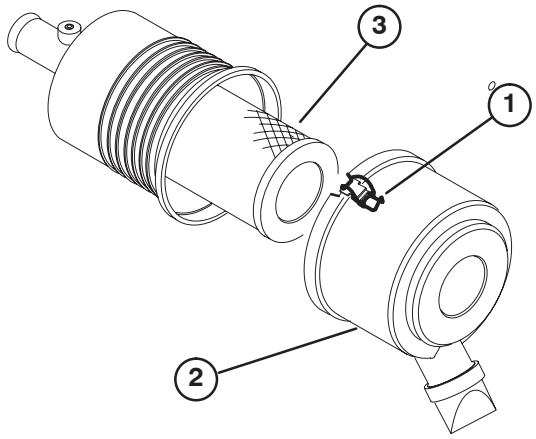

Figure 39

1. Air cleaner latches
2. Dust cup
3. Filter

2. Gently slide filter out of air cleaner body to reduce the amount of dust dislodged. Avoid knocking filter against air cleaner body.

3. Inspect filter and discard if damaged. Do not wash or reuse a damaged filter. Clean the filter as follows:

- Blow compressed air from inside to the outside of dry filter element. Do not exceed 100 psi to prevent damage to the element.
- Keep air hose nozzle at least 2” from filter and move nozzle up and down while rotating the filter element. Inspect for holes and tears by looking through the filter toward a bright light.

4. Inspect new filter for shipping damage. Check sealing end of filter. Do not install a damaged filter.

5. Insert new filter properly into air cleaner body. Make sure filter is sealed properly by applying pressure to outer rim of filter when installing. Do not press on flexible center of filter.

6. Reinstall cover and secure latches.

Changing Engine Oil And Filter

Change oil and filter initially after the first 50 hours of operation, thereafter, change oil and filter every 100 hours.

1. Raise bed (if so equipped) and place safety support on extended lift cylinder to hold up bed.

2. Remove drain plug and let oil flow into drain pan. When oil stops, install drain plug.

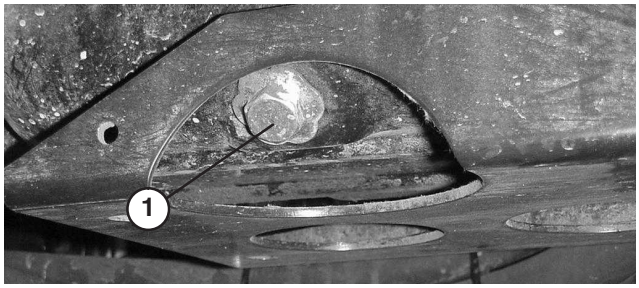

Figure 40

1. Engine oil drain plug

3. Remove oil filter. Apply a light coat of clean oil to the new filter seal before screwing it on. Screw filter on until gasket contacts mounting plate, then tighten 1/2 to 2/3 of a turn. DO NOT OVER–TIGHTEN.

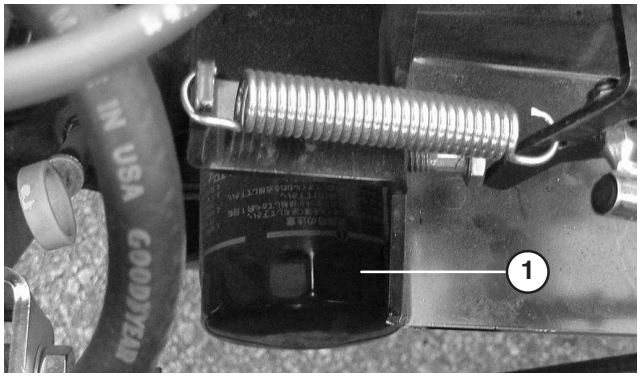

Figure 41

1. Engine oil filter

4. Add oil to crankcase, refer to Check Engine Oil.

Fuel System

Fuel Lines and Connections

Check lines and connections every 600 hours or yearly, whichever comes first. Inspect for deterioration, damage, or loose connections.

Fuel Filters

Replace filter canisters after every 600 hours of operation.

1. Raise bed (if so equipped) and place safety support on extended lift cylinder to hold up bed.

2. Place a clean container under fuel filters.

3. Loosen R–clamps securing filters to frame.

4. Remove clamps securing fuel filters to fuel lines.



Figure 42

1. Fuel filter

5. Install new fuel filters to fuel lines with clamps previously removed. Filters to be mounted so arrow points toward carburetor.

Removing Debris From Engine Cooling System

Remove debris from engine area and radiator daily, clean more frequently in dirty conditions.

1. Turn engine off. Clean engine area thoroughly of all debris.
2. Lift and remove radiator screen from front of radiator.
3. Clean radiator and screen thoroughly with compressed air.

Note: Blow debris away from radiator.

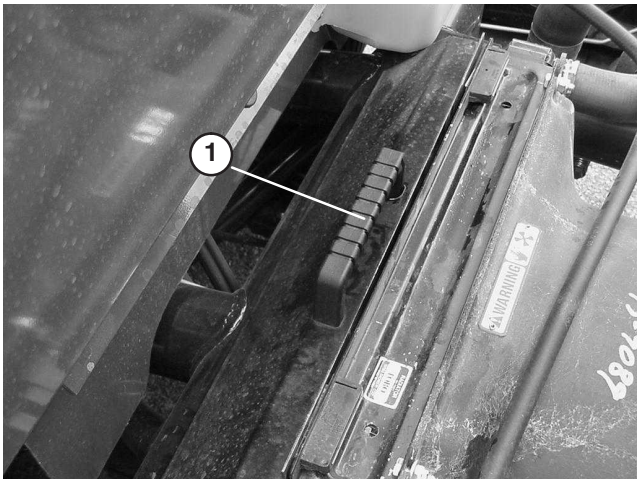

Figure 43

1. Radiator screen

Changing Engine Coolant

1. Park machine on a level surface.
2. Raise bed (if so equipped) and place safety support on extended lift cylinder to hold up bed.

Caution

If the engine has been running, the pressurized, hot coolant can escape and cause burns.

- **Do not open the radiator cap when the engine is running.**
- **Allow engine to cool at least 15 minutes or until the radiator cap is cool enough to touch without burning hand.**
- **Use a rag when opening the radiator cap, and open the cap slowly to allow steam to escape.**

3. Remove radiator cap.



Figure 44

1. Radiator cap

4. Remove reserve tank cap.

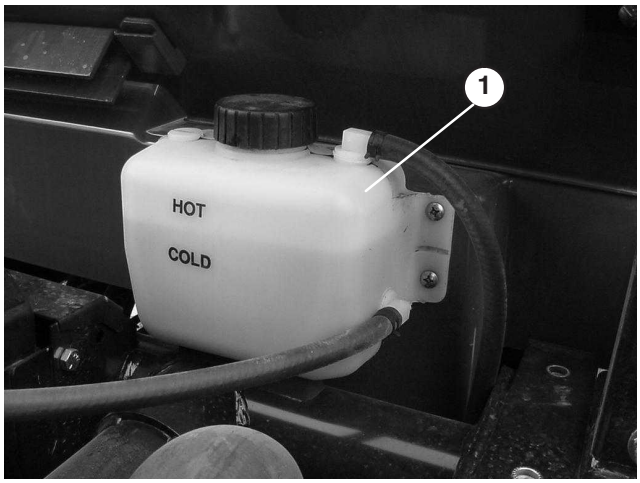

Figure 45

1. Reserve tank cap

5. Open coolant drain cock at bottom of radiator and allow coolant to flow into drain pan. When coolant stops, close drain cock.

6. Open bleed screw on top of water pump (Fig. 46).

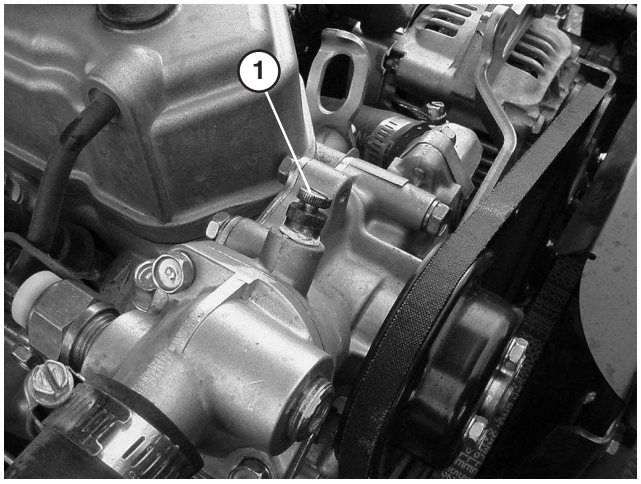

Figure 46

1. Bleed screw

7. Remove coolant drain plug from engine and allow coolant to flow into drain pan. When coolant stops, install drain plug.

8. Slowly fill radiator with a 50/50 mixture of water and permanent ethylene glycol anti–freeze. Install radiator cap.

9. Slowly fill reserve tank until level reaches COLD line. **DO NOT OVERFILL**. Install reserve tank cap.

10. Start engine and operate until warm. Tighten water pump bleed screw when water appears at the bleed screw.

11. Stop engine. Recheck level and replenish, if required.

Adjusting Belts

Check condition and tension of all belts after first day of operation and every 200 operating hours thereafter. Raise bed (if so equipped) and position safety support on extended lift cylinder to hold up bed.

Alternator belt

1. Check tension by depressing belt at mid span of crankshaft and alternator pulleys with 22 lbs. of force. A new belt should deflect .3–.5 in. A used belt should deflect .4–.55 in. If deflection is incorrect, proceed to next step. If correct, continue operation.
2. To adjust belt tension:

- Loosen (2) alternator mounting bolts.

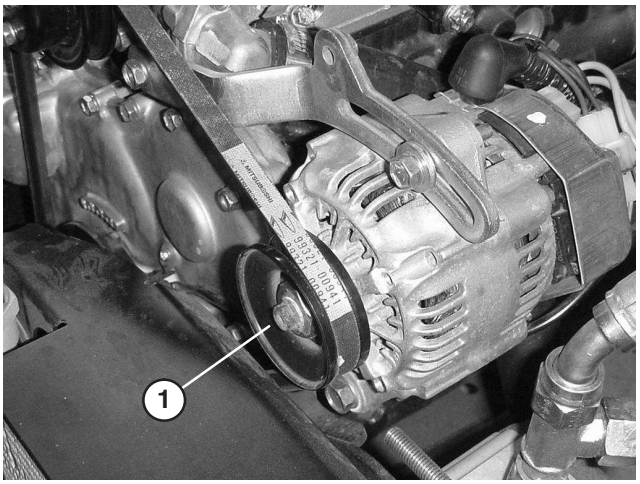

Figure 47

1. Alternator

- Using a bar, rotate alternator until proper belt tension is attained, then tighten mounting bolts.

Fan belt

1. Check tension by depressing belt at mid span of fan and drive shaft pulleys with 22 lbs. of force. A new belt should deflect .48–.58 in. A used belt should deflect .55–.65 in. If deflection is incorrect, proceed to next step. If correct, continue operation.
2. To adjust belt tension:

- Loosen idler pulley mounting nut, move pulley to increase tension and tighten nut.

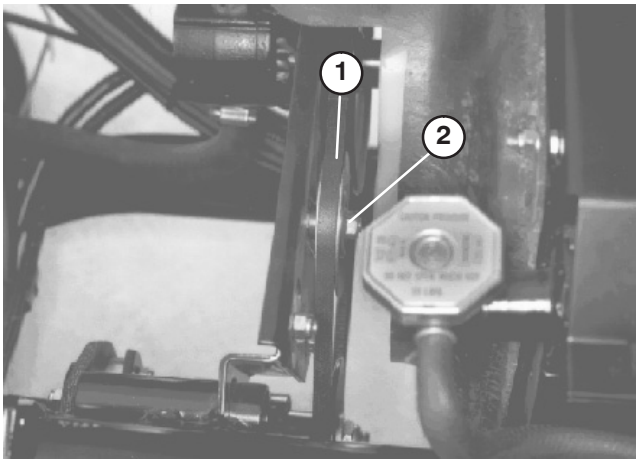

Figure 48

1. Fan belt
2. Idler pulley

Adjusting Accelerator Pedal

1. Position vehicle on level surface, stop engine and engage the parking brake.
2. Adjust ball joint on accelerator cable to allow .200”–.350” of clearance between accelerator pedal arm and top of diamond tread floor plate, when a 20 lb. force is applied to center of pedal. Tighten locknut.

Note: Engine must not be running and return spring must be attached.

Warning

Governor is preset at the factory to a maximum engine speed of 3650 rpm. If speed is not correct, contact your authorized Toro Dealer/Distributor.

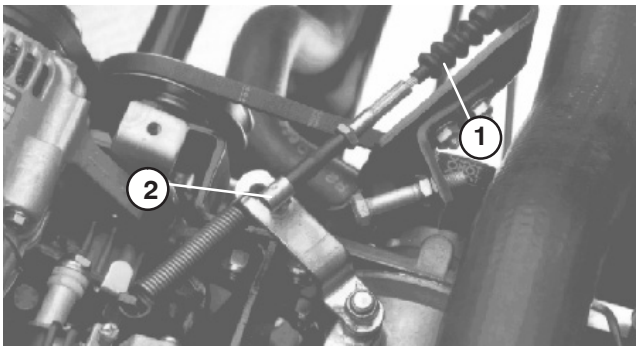

Figure 49

1. Accelerator cable
2. Ball joint

Changing Transaxle / Hydraulic Fluid

Change Transaxle hydraulic fluid, filter and clean strainer every 800 hours.

1. Position the vehicle on a level surface, stop engine, engage the parking brake and remove key from ignition switch.
2. Remove drain plug from side of reservoir and let hydraulic fluid flow into drain pan. Reinstall and tighten plug when hydraulic fluid stops draining.

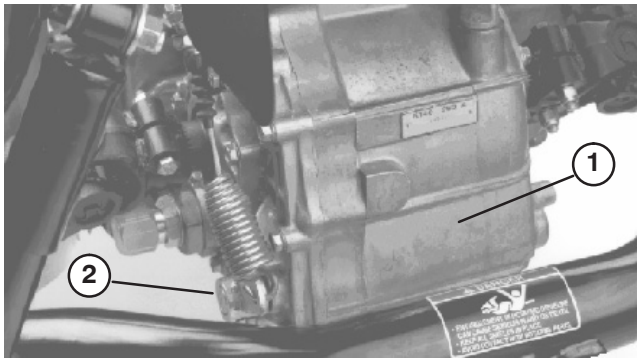

Figure 50

1. Hydraulic reservoir
2. Drain plug

3. Fill reservoir with approximately 7.5 qt. of Dexron III ATF. Refer to Checking Hydraulic Fluid.
4. Start engine and operate to fill hydraulic system. Recheck oil level and replenish, if required.

Important Use only hydraulic fluids specified. Other fluids could cause system damage.

Replacing Hydraulic Filter

Initially, replace the hydraulic filter after 10 operating hours, thereafter, replace filter every 800 hours.

Use the Toro replacement filter (Part No. 54–0110).

Important Use of any other filter may void the warranty on some components.

1. Position vehicle on a level surface, stop engine, engage the parking brake and remove key from ignition switch.
2. Clean area around filter mounting area. Place drain pan under filter and remove filter.
3. Lubricate new filter gasket.

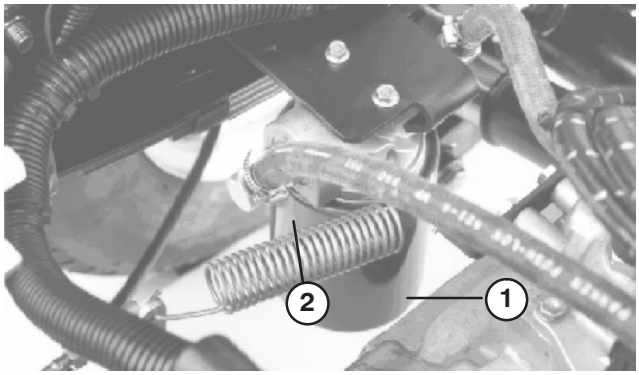

Figure 51

1. Hydraulic filter
2. Gasket

4. Assure filter mounting area is clean. Screw filter on until gasket contacts mounting plate. Then tighten filter one–half turn.
5. Start engine and let run for about two minutes to purge air from the system. Stop the engine and check the hydraulic oil level and for leaks.

Change Front Differential Oil

Front Wheel Drive Only

Change front differential oil every 800 hours.

1. Position vehicle on a level surface, stop engine, engage parking brake and remove key from ignition switch.
2. Clean area around drain plug on side of differential. Place drain pan under drain plug.

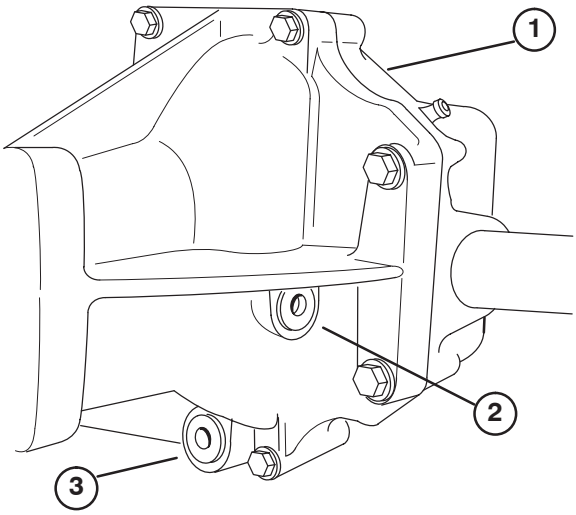

Figure 52

1. Front differential
2. Fill/check plug
3. Drain plug

3. Remove drain plug and let oil flow into drain pan. Reinstall and tighten plug when oil stops draining.
4. Clean area around fill/check plug on side of differential.
5. Remove fill/check plug and add 10W30 oil until oil is up to hole.
6. Re–install fill/check plug.

Cleaning Hydraulic Strainer

Clean hydraulic strainer every 800 hours.

1. Position the vehicle on a level surface, stop engine, engage the parking brake and remove key from ignition switch.
2. Remove drain plug (Fig. 52) from side of reservoir and let hydraulic fluid flow into drain pan.
3. Note orientation of hydraulic hose and 90 °fitting connected to strainer on side of reservoir. Remove hydraulic hose and 90 degree fitting.
4. Remove strainer and clean by back flushing with a clean degreaser. Allow to air dry before reinstalling.

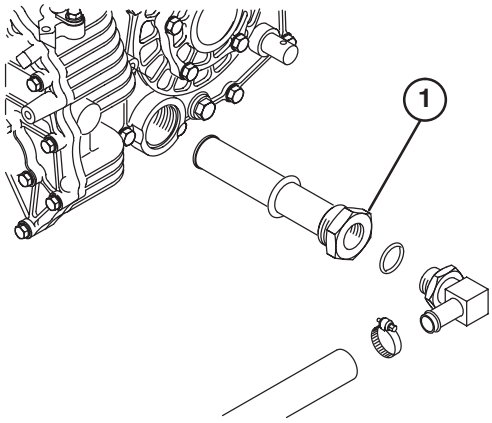

Figure 53

1. Hydraulic strainer

5. Reinstall strainer.
6. Reinstall hydraulic hose and 90 degree fitting to strainer in same orientation.
7. Reinstall and tighten drain plug.
8. Fill reservoir with approximately 7.5 qt. of Dexron III ATF. Refer to Checking Hydraulic Fluid.

Replacing Spark Plugs

Replace spark plugs after every 400 operating hours to assure proper engine performance and reduce exhaust emission level.

Correct spark plug to use is a Champion RC 14YC or NGK BPR 4ES.

Recommended air gap is .032”.

Note: The spark plug usually lasts a long time; however, the plug should be removed and checked whenever the engine malfunctions.

1. Clean area around spark plugs so foreign matter cannot fall into cylinder when spark plug is removed.
2. Pull spark plug wires off spark plugs and remove plugs from cylinder head.
3. Check condition of side electrode, center electrode, and center electrode insulator to assure there is no damage.

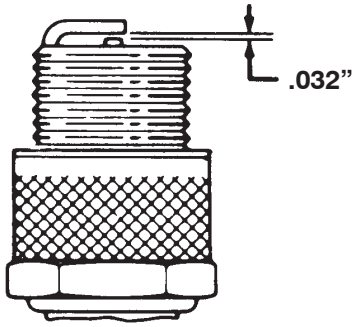

Figure 54

Important **A cracked, fouled, dirty or otherwise malfunctioning spark plug must be replaced. Do not sand blast, scrape, or clean electrodes by using a wire brush because grit may eventually release from the plug and fall into the cylinder. The result is usually a damaged engine.**

4. Set air gap between center and side of electrodes at .040”. Install correctly gapped spark plug and tighten plug to 15–20 ft–lb. If torque wrench is not used, tighten plug firmly.
5. Install spark plug wires.

Adjusting Brake Pedal

Check adjustment every 200 hours.

1. Loosen jam nut on link rod ball joint.
2. Rotate rod until gap between brake pedal and up stop is .020–.080".
3. Tighten jam nut after adjustment has been attained.

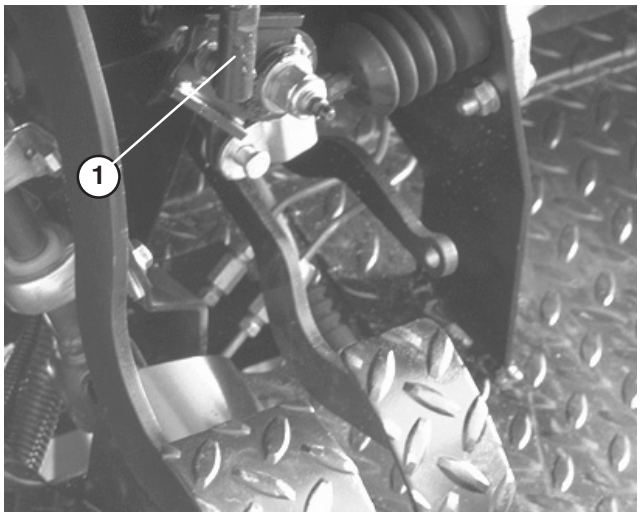

Figure 55

1. Link rod ball joint

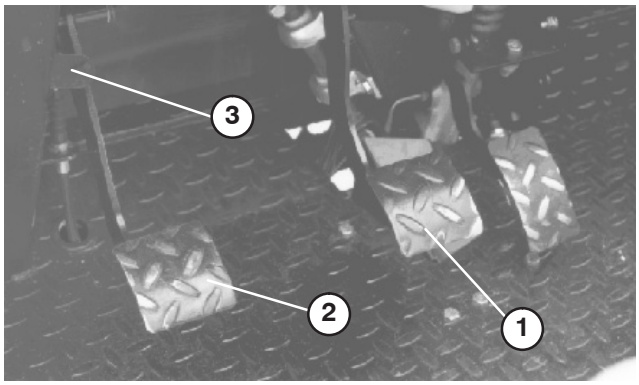

Figure 56

1. Brake pedal
2. Clutch pedal
3. Clutch pedal upstop

Adjusting Clutch Pedal

Check adjustment every 200 hours.

1. Loosen jam nuts securing clutch cable to bracket on bell housing.

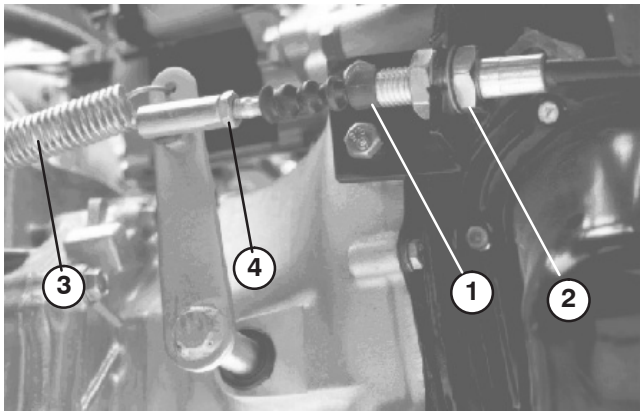

Figure 57

1. Clutch cable
2. Jam nuts
3. return spring
4. Ball joint

Note: Ball joint may be removed and rotated, if additional adjustment is required.

2. Disconnect return spring from clutch lever.
3. Adjust jam nuts/or ball joint until bottom rear edge of clutch pedal is 3.75" ± .12" from top of floor plate diamond pattern, when an 4 lb. force is applied to pedal.

Note: Force is applied so release bearing lightly contacts pressure plate fingers.

4. Reconnect return spring to clutch lever.
5. Verify that rear edge of clutch pedal is 5.5" ± .12" from top of floor plate diamond pattern. If dimension is not attained, adjust clutch pedal upstop.

Note: The clutch free play should never be less than .75".

6. Tighten jam nuts after adjustment has been attained.
7. Recheck clutch safety switch adjustment (Fig. 58). Engine must not crank unless clutch pedal is 1.25" ±.12" from floor. If an adjustment is required, loosen switch jam nuts and adjust up or down.

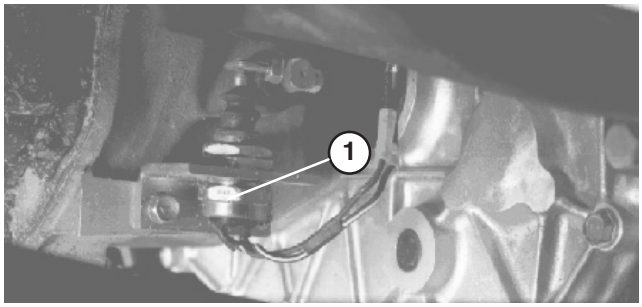

Figure 58

1. Clutch switch

Adjusting Parking Brake

Check adjustment every 200 hours.

1. Loosen set screw securing knob to parking brake lever.
2. Rotate knob until a force of 35–45 lbs. for 2 wheel drive or 45–55 lbs. for 4 wheel drive is required to actuate lever.
3. Tighten set screw after adjustment has been attained.

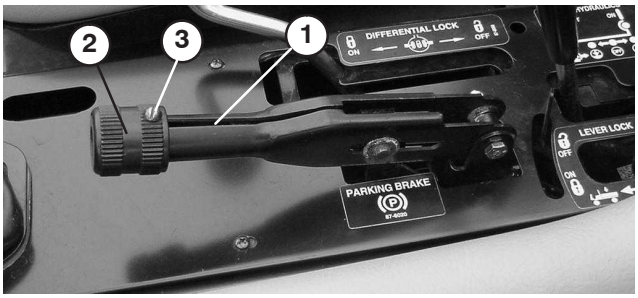

Figure 59

1. Parking brake lever
2. Knob
3. Set screw

Adjusting Shift Cables

Check adjustment every 200 hours.

1. Move shift lever to Neutral position.
2. Remove clevis pins securing shift cables to transaxle shift arms.

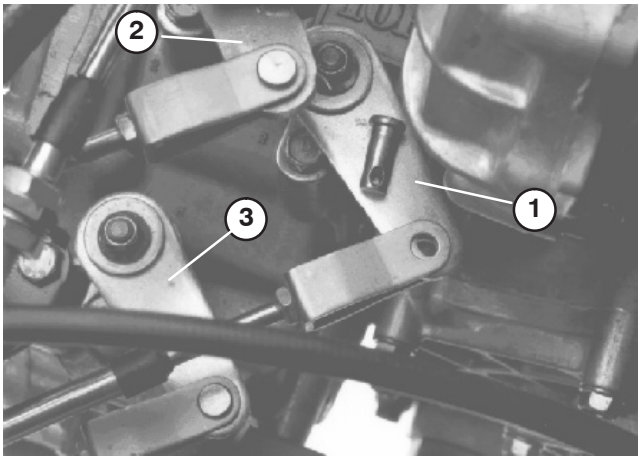

Figure 60

1. Shift arm (1st – Rev.)
2. Shift arm (2nd – 3rd)
3. Shift arm (High–low)

3. Loosen clevis jam nuts and adjust each clevis so cable free play is equal forward and backward relative to hole in transaxle shift arm (With transaxle lever free play taken up in same direction).
4. Reinstall clevis pins and tighten jam nuts after adjustments have been attained.

Adjusting High–low Cable

Check adjustment every 200 hours.

1. Remove clevis pin securing High–Low cable to transaxle.
2. Loosen clevis jam nut and adjust clevis so clevis hole aligns with hole in transaxle bracket.
3. Reinstall clevis pin and tighten jam nut after adjustment has been attained.

Adjusting Differential Lock Cable

Check adjustment every 200 hours.

1. Move differential lock lever to Off position.
2. Loosen jam nuts securing differential lock cable to bracket on transaxle.

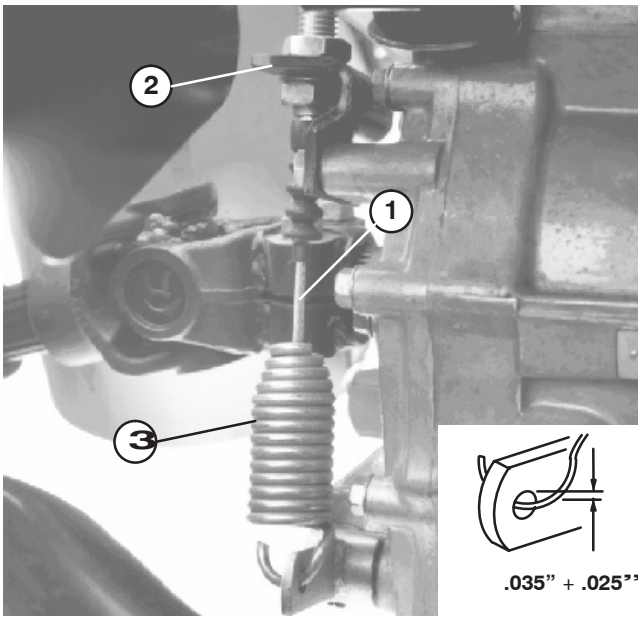

Figure 61

1. Differential lock cable
2. Transaxle bracket
3. Spring

3. Adjust jam nuts to obtain .035” ± .025” gap between spring hook and O.D. of hole in transaxle lever.
4. Tighten jam nuts after adjustment has been attained.

Inspect Brakes

Visually inspect brakes for worn brake shoes after every 600 hours of operation.

Inspect Tires

Check tire condition at least every 200 hours of operation. Operating accidents, such as hitting curbs, can damage a tire or rim and also disrupt wheel alignment, so inspect tire condition after an accident.

Front Wheel Toe–in

After every 400 operating hours or annually, check front wheel toe–in.

1. Measure center–to–center distance (at axle height) at front and rear of steering tires. Front measurement must be equal to the rear measurement ±1/8 in..

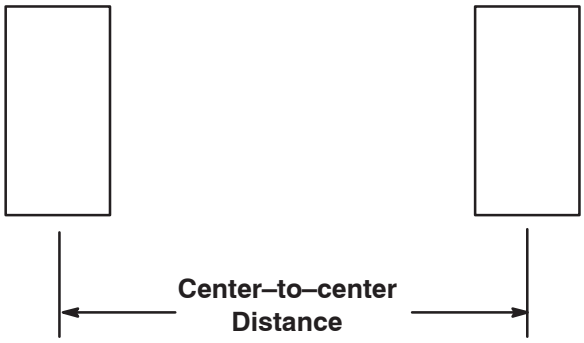

Figure 62

2. To adjust**,** loosen jam nuts at both ends of tie rod.

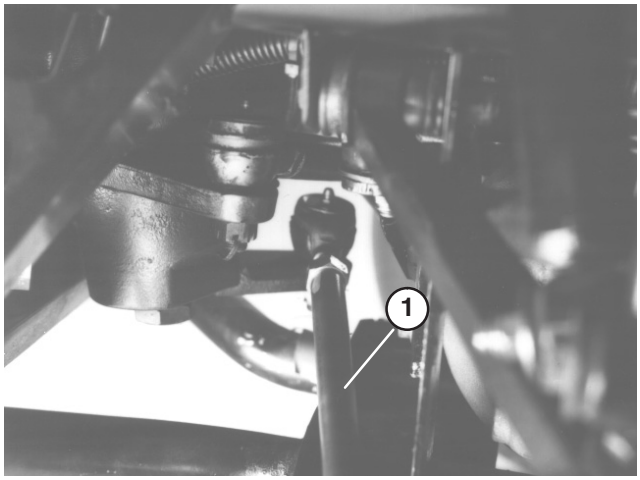

Figure 63

1. Tie rod

3. Rotate tie rod to move front of tire inward or outward.
4. Tighten tie rod jam nuts when adjustment is correct.

Inspect Constant Velocity Boot

Front Wheel Drive Only

After every 200 operating hours, inspect constant velocity boot for cracks, holes or a loose clamp.

Emergency Box Raising

(without starting engine)

The box can be raised in an emergency by cranking starter and holding lift lever. Run starter for 15 seconds then wait 60 seconds before engaging starter again.

If engine will not crank, the load and box (attachment) must be removed to service engine or transaxle.

Fuses

There are 3 fuses in the machine's electrical system. They are located under right side of dash panel.

FUSES	
OPEN	—
LIGHTS & HORN	10A
DASH	7.5A
IGNITION	7.5A

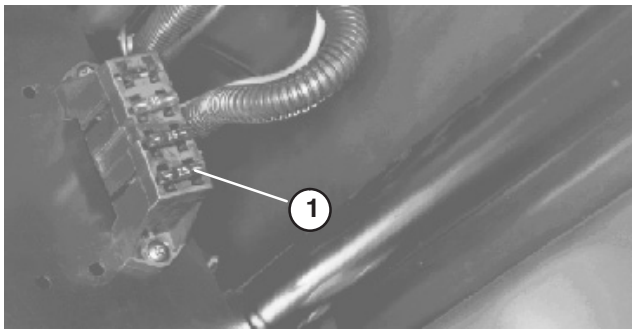

Figure 64

1. Fuse block

Jump Starting Procedure

Warning

Jump starting can be dangerous. To avoid personal injury or damage to electrical components in vehicle, observe the following warnings:

- **Never jump start with a voltage sources greater than 15 volts D.C. This will damage the electrical system.**
- **Never attempt to jump start a discharged battery that is frozen. It could rupture or explode during jump starting.**
- **Observe all battery warnings while jump starting your vehicle.**
- **Be sure your vehicle is not touching the jump start vehicle.**
- **Connecting cables to the wrong post could result in personal injury and/or damage to the electrical system.**

1. Loosen knobs securing battery cover to battery base and slide cover off.
2. Connect a jumper cable between the positive posts of the two batteries. The positive post may be identified by a "+" sign on top of battery cover.

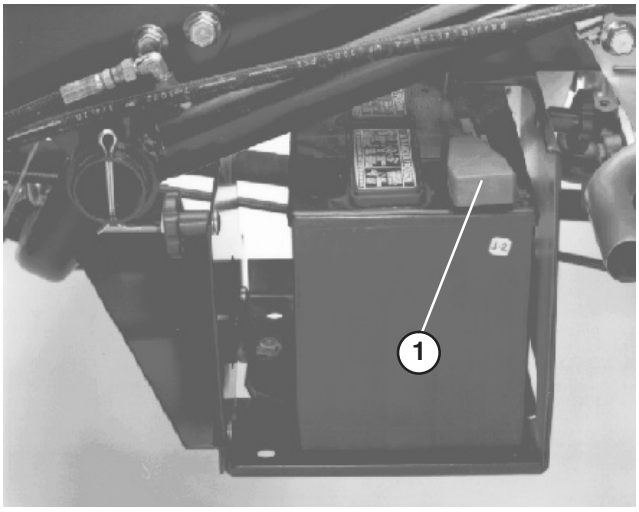

Figure 65

1. Positive (+) cable

3. Connect one end of the other jumper cable to the negative terminal of the battery in the other vehicle. The negative terminal has "NEG" on the battery cover. Do not connect the other end of the the jumper cable to the negative post of the discharged battery. Connect it to the engine. Do not connect the jumper cable to the fuel system.
4. Start the engine in the vehicle providing the jump start. Let it run a few minutes, then start your engine.
5. Remove the negative jumper cable first from your engine, then the battery in the other vehicle.
6. Reinstall battery cover to battery base and tighten knobs.

Battery Storage

Warning

CALIFORNIA

Proposition 65 Warning

Battery posts, terminals, and related accessories contain lead and lead compounds, chemicals known to the State of California to cause cancer and reproductive harm. ***Wash hands after handling.***

If the machine will be stored for more than 30 days, remove the battery and charge it fully. Either store it on the shelf or on the machine. Leave the cables disconnected if stored on the machine. Store the battery in a cool atmosphere to avoid quick deterioration of the charge in the battery. To prevent battery from freezing, make sure it is fully charged. The specific gravity of a fully charged battery is 1.250.

Battery Care

1. Battery electrolyte level must be properly maintained and the top of the battery kept clean. lf the machine is stored in a location where temperatures are extremely high, the battery will run down more rapidly than if the machine is stored in a location where temperatures are cool.

Danger

Battery electrolyte contains sulfuric acid which is a deadly poison and causes severe burns.

- **Do not drink electrolyte and avoid contact with skin, eyes or clothing. Wear safety glasses to shield your eyes and rubber gloves to protect your hands.**
- **Fill the battery where clean water is always available for flushing the skin.**

2. Keep top of battery clean by washing periodically with a brush dipped in ammonia or bicarbonate of soda solution. Flush the top surface with water after cleaning. Do not remove the fill cap while cleaning.
3. Battery cables must be tight on terminals to provide good electrical contact.
4. If corrosion occurs at terminals,remove battery cover, disconnect cables, negative (–) cable first and scrape clamps and terminals separately. Reconnect cables, positive (+) cable first and coat terminals with petroleum jelly.
5. Check the electrolyte level every 50 operating hours or, if machine is in storage, every 30 days.
6. Maintain cell level with distilled or demineralized water. Do not fill cells above the bottom of the fill ring inside each cell.

Hydraulic Schematic

(Base Vehicle)

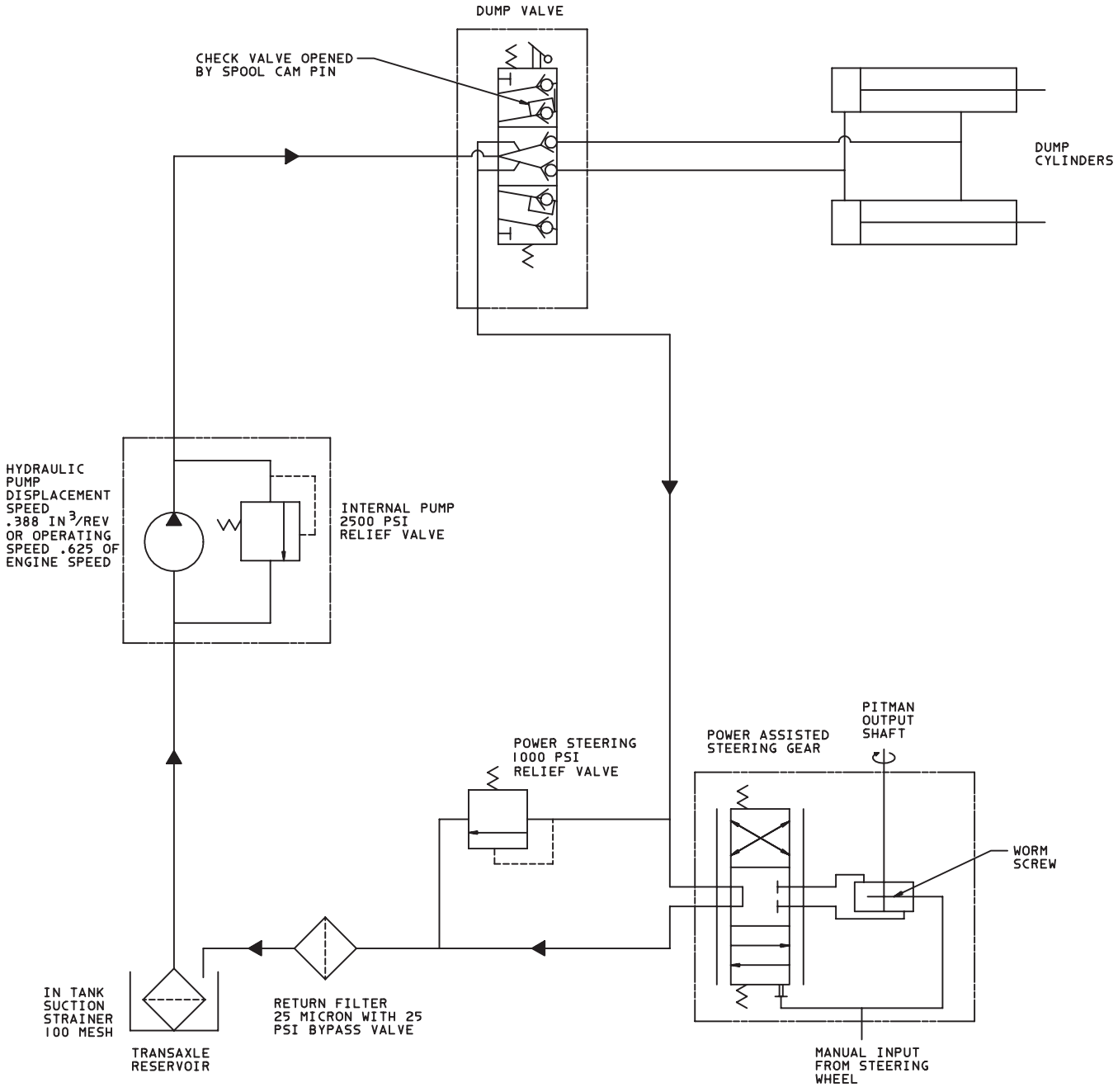

Hydraulic Schematic

(Vehicle w/ Remote Hydraulic Kit)
(Model 07211 TC Only)

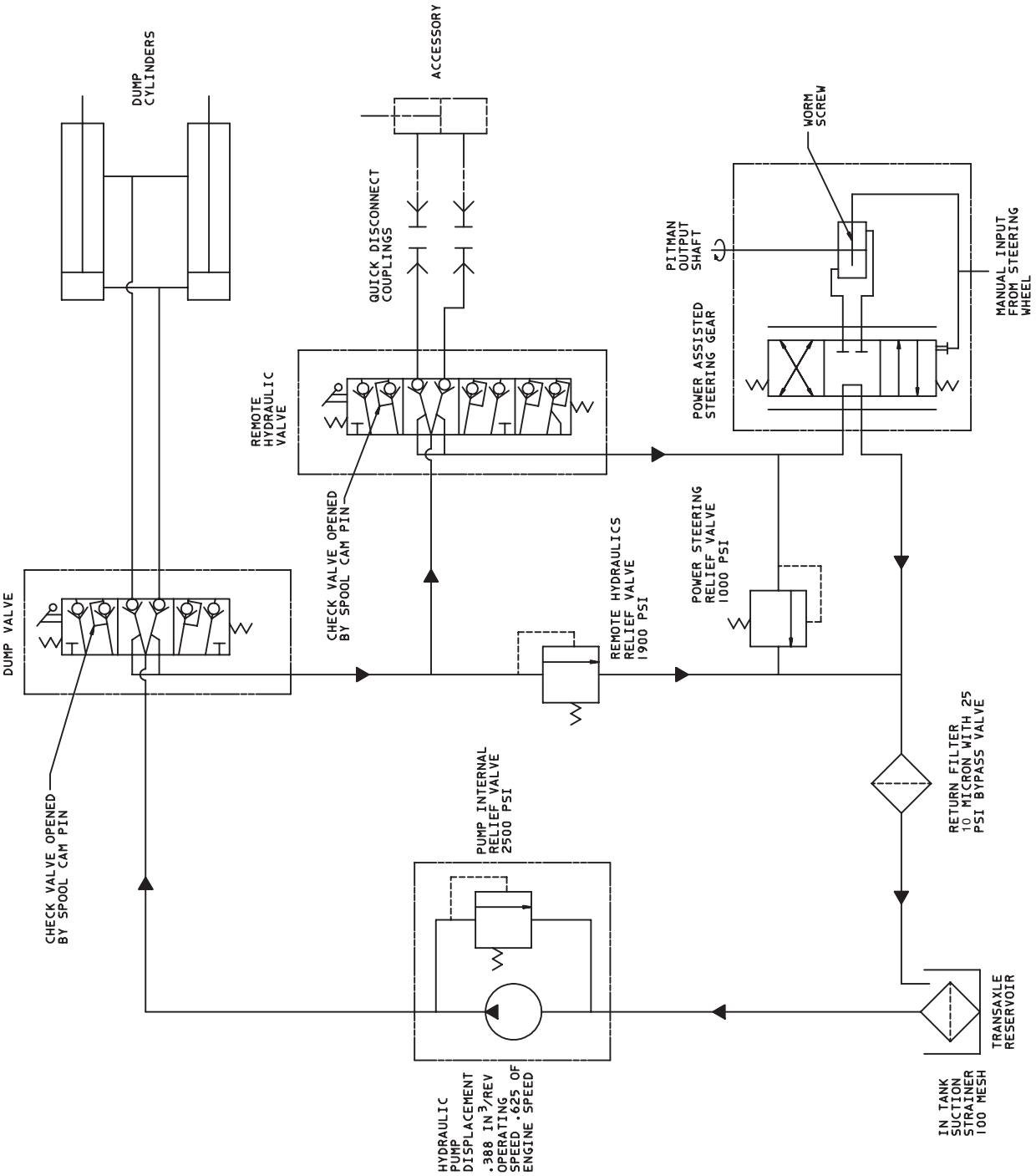

Electrical Schematic

(Base Vehicle)

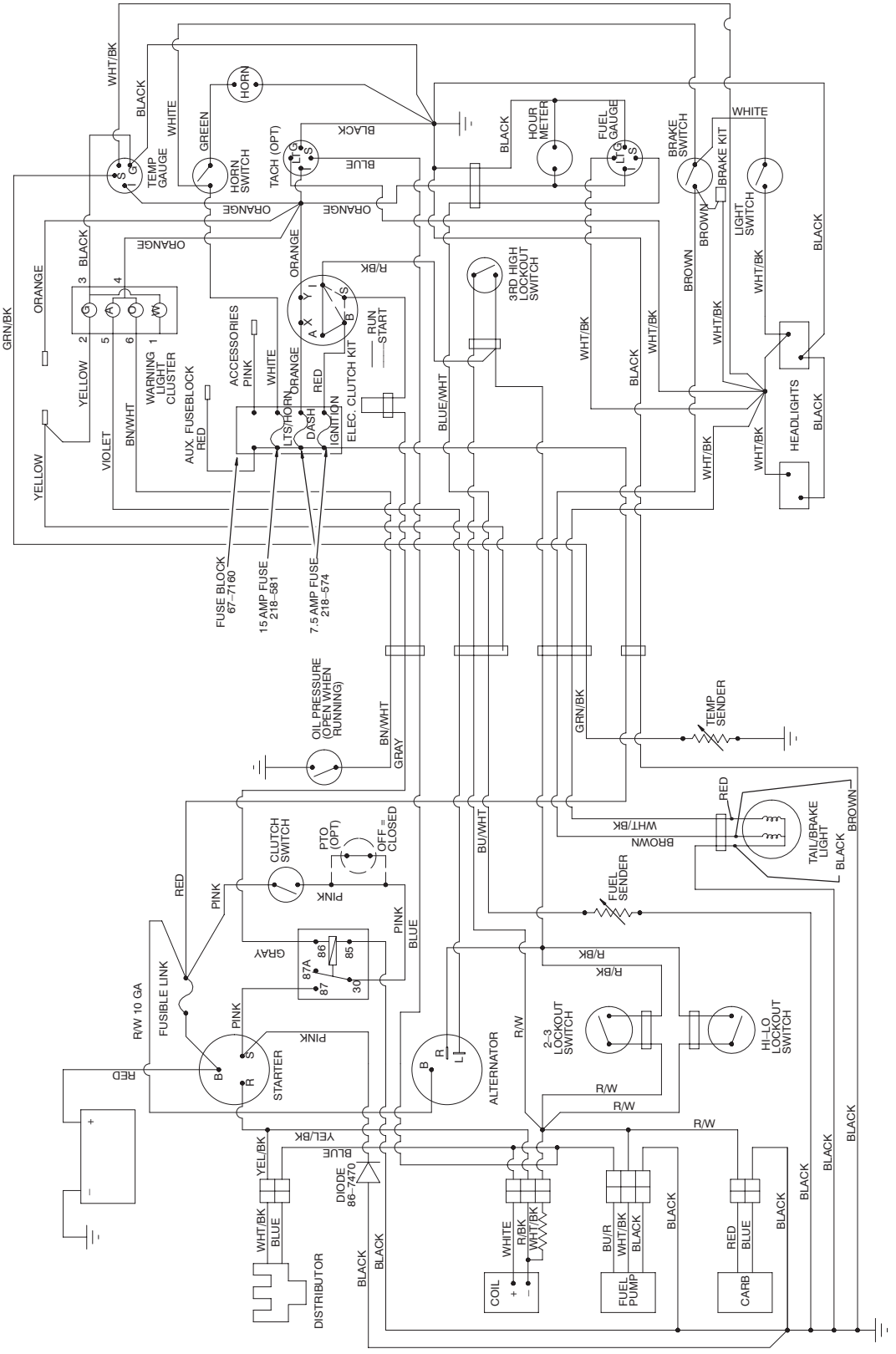

Electrical Schematic

(Vehicle w/ Remote Hydraulic Kit)
(Model 07211 TC Only)

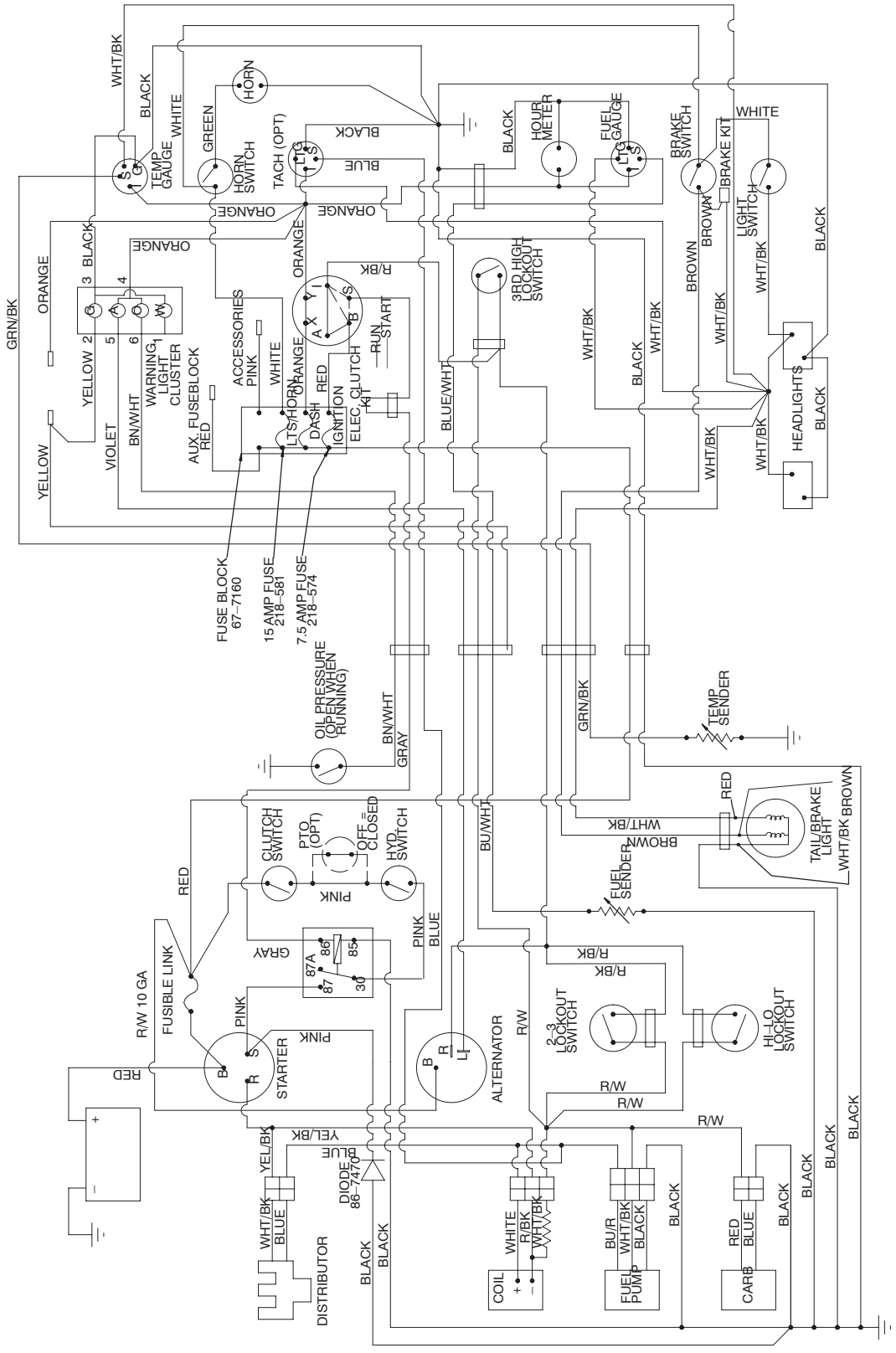

The Toro General Commercial Products Warranty

A Two-Year Limited Warranty

Conditions and Products Covered

The Toro Company and its affiliate, Toro Warranty Company, pursuant to an agreement between them, jointly warrant your 1996 or newer Toro Commercial Product ("Product") purchased after January 1, 1997, to be free from defects in materials or workmanship for two years or 1500 operational hours*, whichever occurs first. Where a warrantable condition exists, we will repair the Product at no cost to you including diagnosis, labor, parts, and transportation. This warranty begins on the date the Product is delivered to the original retail purchaser.

* Product equipped with hour meter

Instructions for Obtaining Warranty Service

You are responsible for notifying the Commercial Products Distributor or Authorized Commercial Products Dealer from whom you purchased the Product as soon as you believe a warrantable condition exists.

If you need help locating a Commercial Products Distributor or Authorized Dealer, or if you have questions regarding your warranty rights or responsibilities, you may contact us at:

Toro Commercial Products Service Department
Toro Warranty Company
8111 Lyndale Avenue South
Bloomington, MN 55420-1196
952-888-8801 or 800-982-2740
E-mail: commercial.service@toro.com

Owner Responsibilities

As the Product owner, you are responsible for required maintenance and adjustments stated in your operator's manual. Failure to perform required maintenance and adjustments can be grounds for disallowing a warranty claim.

Items and Conditions Not Covered

Not all product failures or malfunctions that occur during the warranty period are defects in materials or workmanship. This express warranty does not cover the following:

- Product failures which result from the use of non-Toro replacement parts, or from installation and use of add-on, modified, or unapproved accessories
- Product failures which result from failure to perform required maintenance and/or adjustments
- Product failures which result from operating the Product in an abusive, negligent or reckless manner
- Parts subject to consumption through use unless found to be defective. Examples of parts which are consumed, or used up, during normal Product operation include, but are not limited to, blades, reels, bedknives, tines, spark plugs, castor wheels, tires, filters, belts, etc.
- Failures caused by outside influence. Items considered to be outside influence include, but are not limited to, weather, storage practices, contamination, use of unapproved coolants, lubricants, additives, or chemicals, etc.
- Normal "wear and tear" items. Normal "wear and tear" includes, but is not limited to, damage to seats due to wear or abrasion, worn painted surfaces, scratched decals or windows, etc.

Parts

Parts scheduled for replacement as required maintenance are warranted for the period of time up to the scheduled replacement time for that part.

Parts replaced under this warranty become the property of Toro. Toro will make the final decision whether to repair any existing part or assembly or replace it. Toro may use factory remanufactured parts rather than new parts for some warranty repairs.

General Conditions

Repair by an Authorized Toro Distributor or Dealer is your sole remedy under this warranty.

Neither The Toro Company nor Toro Warranty Company is liable for indirect, incidental or consequential damages in connection with the use of the Toro Products covered by this warranty, including any cost or expense of providing substitute equipment or service during reasonable periods of malfunction or non-use pending completion of repairs under this warranty. Except for the Emissions warranty referenced below, if applicable, there is no other express warranty. All implied warranties of merchantability and fitness for use are limited to the duration of this express warranty.

Some states do not allow exclusions of incidental or consequential damages, or limitations on how long an implied warranty lasts, so the above exclusions and limitations may not apply to you.

This warranty gives you specific legal rights, and you may also have other rights which vary from state to state.

Note regarding engine warranty: The Emissions Control System on your Product may be covered by a separate warranty meeting requirements established by the U.S. Environmental Protection Agency (EPA) and/or the California Air Resources Board (CARB). The hour limitations set forth above do not apply to the Emissions Control System Warranty. Refer to the Engine Emission Control Warranty Statement printed in your operator's manual or contained in the engine manufacturer's documentation for details.

Countries Other than the United States or Canada

Customers who have purchased Toro products exported from the United States or Canada should contact their Toro Distributor (Dealer) to obtain guarantee policies for your country, province, or state. If for any reason you are dissatisfied with your Distributor's service or have difficulty obtaining guarantee information, contact the Toro importer. If all other remedies fail, you may contact us at Toro Warranty Company.

Part No. 374-0031 Rev. –