FORM NO. 3313-267

TORO

MODEL NO. 38310-8000001 & UP

PARTS CATALOG

TORO POWER SHOVEL

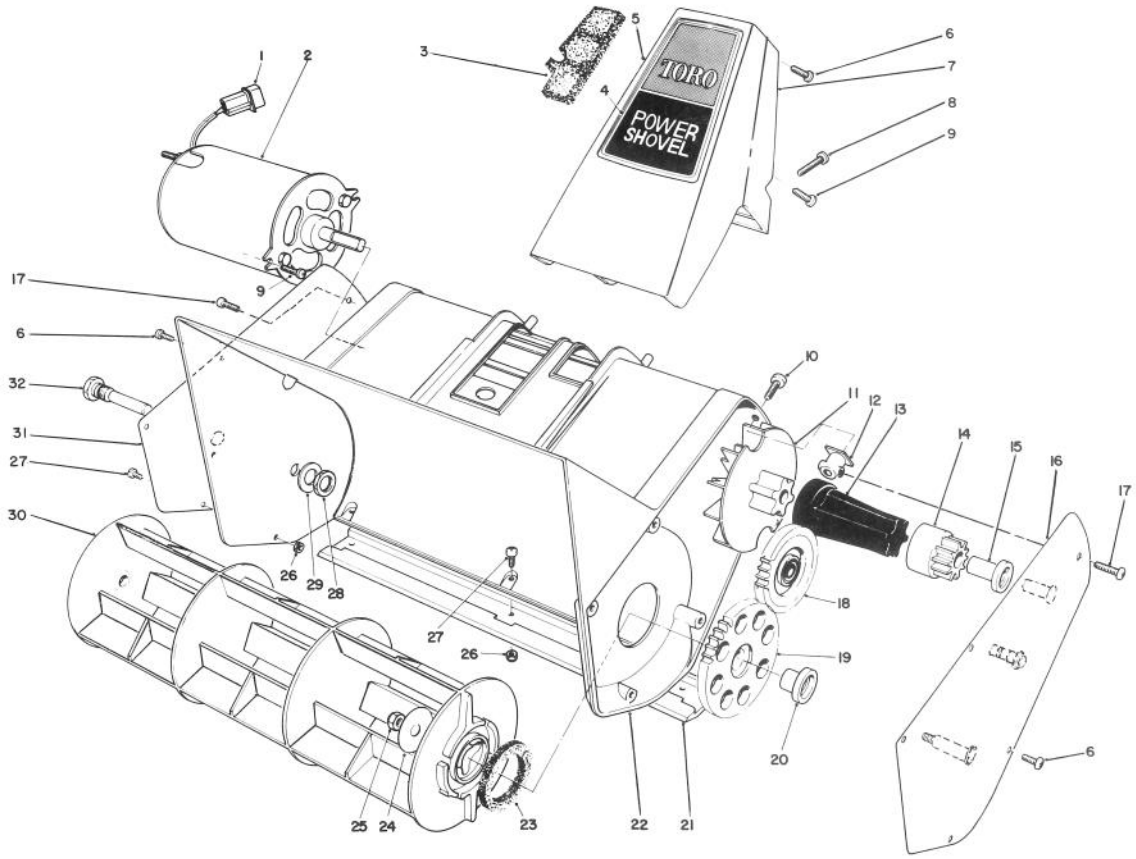

ROTOR HOUSING ASSEMBLY

Ref. No.	Part No.	Description	No. Used
1	218-551	Pin - Housing	1
2	53-4400	Motor	1
3	42-0050	Filter - Foam	1
4	41-9840	Decal - Handle Support	1
5	42-2850	Handle Support - Front	1
6	32104-118	Screw - Pan Head	9
7	42-2860	Handle Support - Back	1
8	3250-20	Screw - Pan Head	2
9	32144-36	Screw - Pan Head	4
10	32144-66	Screw - Phillips Head	2
11	41-9820	Fan	1
12	53-9390	Block - Mounting	2
13	38-8570	Coupling - Drive	1
14	42-0240	Drive Gear (Incl. Ref. #15)	1
15	42-0010	Bushing - Drive Gear	1
16	53-9300	Gear - Carrier	1
17	32104-121	Screw - Pan Head	2

Ref. No.	Part No.	Description	No. Used
18	56-6770	Idler Gear Assembly	1
19	42-0230	Rotor Gear Assembly (Incl. Ref. #20)	1
20	41-9890	Bushing - Rotor	1
21	41-9830	Scraper	1
22	53-9380	Housing	1
23	38-8580	Washer - Felt	1
24	42-0070	Washer - Rotor	1
25	3296-13	Locknut	1
26	3296-54	Locknut - Thin	5
27	3250-19	Screw - Pan Head	5
28	32152-8	Nut - Lock	1
29	3256-24	Flat - Washer	1
30	38-8170	Rotor	1
31	41-9960	Cover - Right Side	1
32	38-8210	Pin - Rotor	1

©The TORO Company - 1987

PRICE $1.00

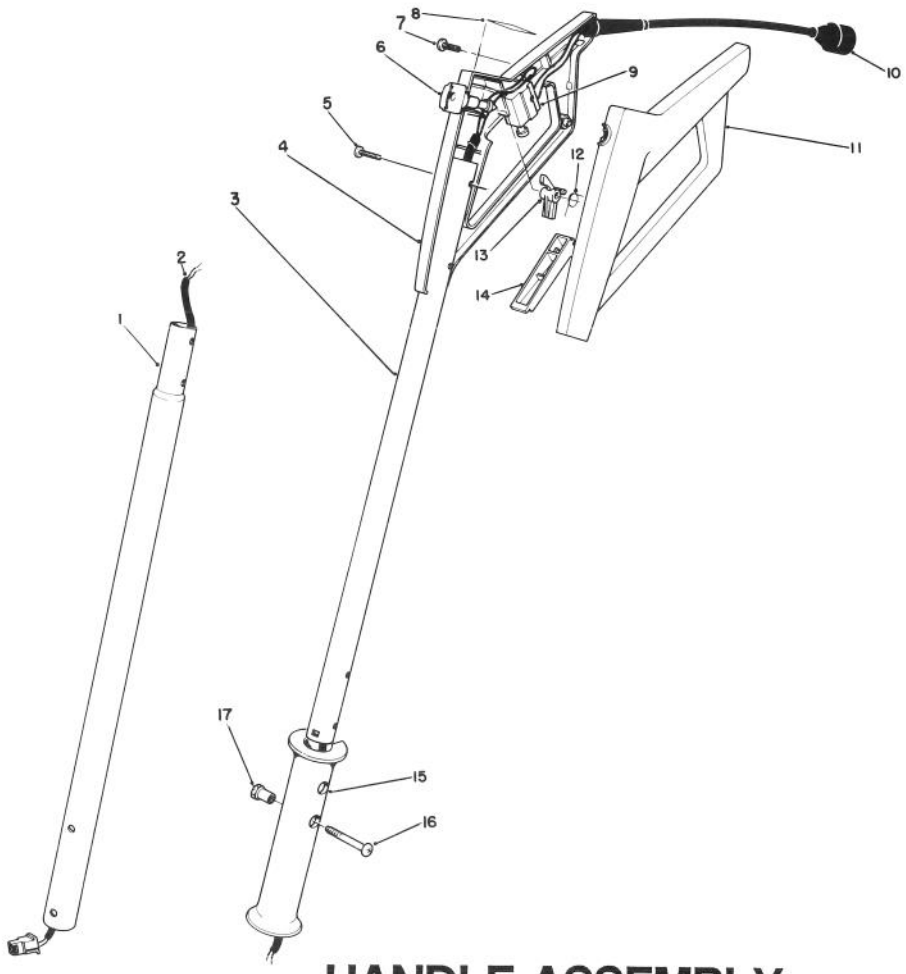

HANDLE ASSEMBLY

Ref. No.	Part No.	Description	No. Used
1	41-9850	Tube – Lower Handle	1
2	56-6050	Wire Harness	1
3	41-9860	Tube – Upper Handle	1
4	42-2830	Grip – Control R.H.	1
5	32104-121	Screw – Pan Head	4
6	38-8310	Key	2
7	32104-118	Screw – Pan Head	1
8	38-8340	Decal – Control Grip	1
9	36-8340	Switch	1

Ref. No.	Part No.	Description	No. Used
10	42-0770	Cord – Supply	1
11	42-2840	Grip – Control L.H.	1
12	38-8330	Spring	1
13	41-9870	Lockout	1
14	42-2870	Switch Bar	1
15	41-9880	Grip – Handle	1
16	39-3720	Screw – Pan Head Special	2
17	39-3710	Nut – Hex Special	2
*	60-9650	Loose Parts	1

* Not Illustrated