FORM NO. 3313-275

TORO®

MODEL 38065 — 8000001 & Up

PARTS CATALOG

624 SNOWTHROWERS

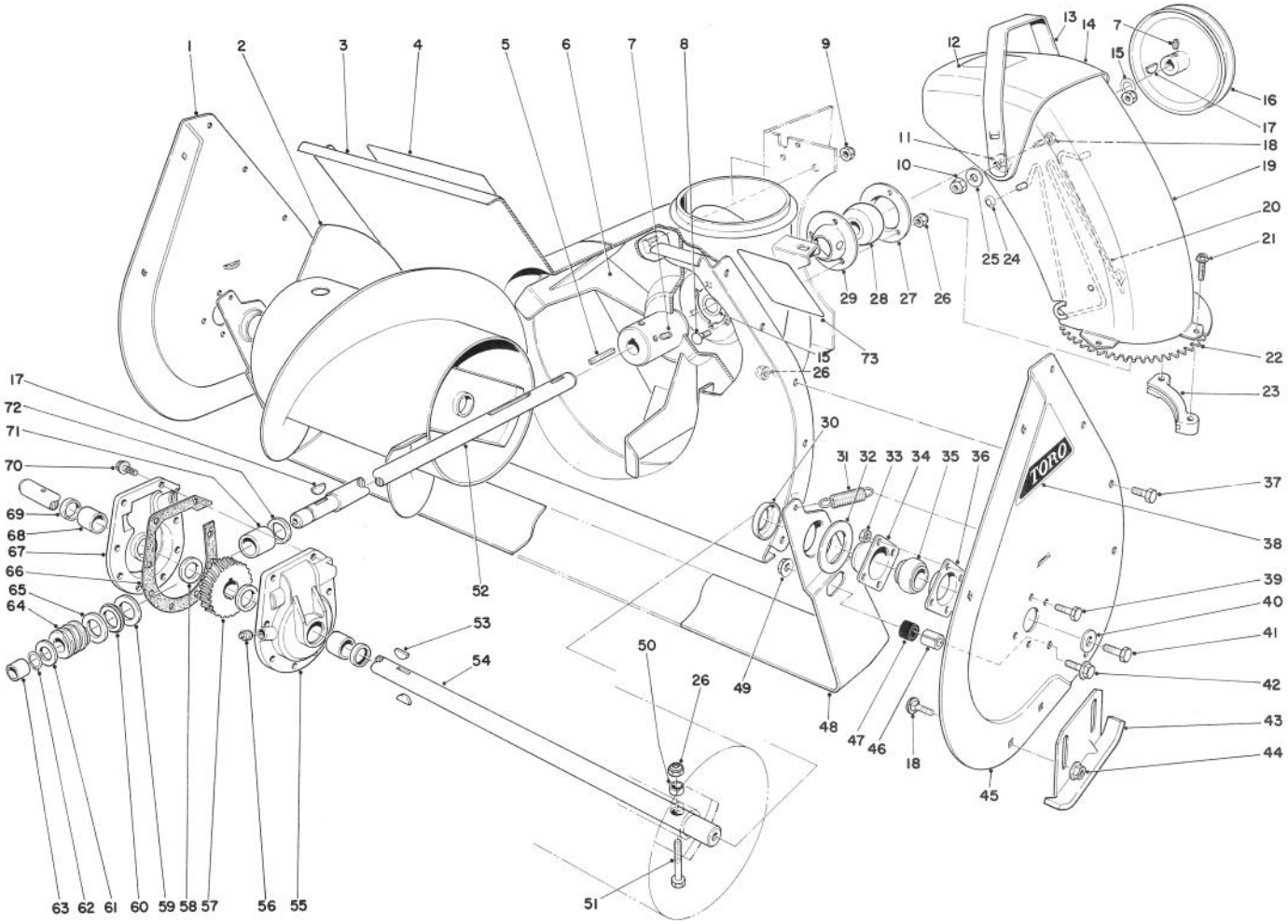

AUGER ASSEMBLY

Ref. No.	Part No.	Description	No. Used
1	43-7440	Sideplate Auger Right	1
2	26-6140	Auger Right	1
*	26-6150	Auger Left	1
3	40-8120	Auger Housing	1
4	54-9910	Decal — Auger Warning	1
5	6-8590	Key — Impeller	1
6	20-1260	Impeller	1
7	3242-4	Set Screw	4
8	3230-1	Carriage Bolt	3
9	3296-39	Locknut	4
10	32152-2	Nut — Lock	2
11	20-4320	Washer Rubber	2
12	63-3760	Decal — Discharge	1

Ref. No.	Part No.	Description	No. Used
13	20-1410	Handle Deflector	1
14	11-9379	Deflector Chute (Incl. Ref. #12)	1
15	3-0737	Thrust Washer	2
16	20-1310	Pulley Impeller	1
17	3257-23	Woodruff Key	2
18	3231-27	Carriage Bolt	6
19	56-2450	Chute	1
20	54-9770	Wire Chute	1
21	27-0210	Special Screw	4
22	43-7470	Swivel Gear Chute	1
23	40-8150	Retainer Chute	2
24	3290-326	Pushnuts	2
25	3290-340	Washer Belleville	2

*Not Illustrated

©The Toro Company — 1987

PRICE $1.00

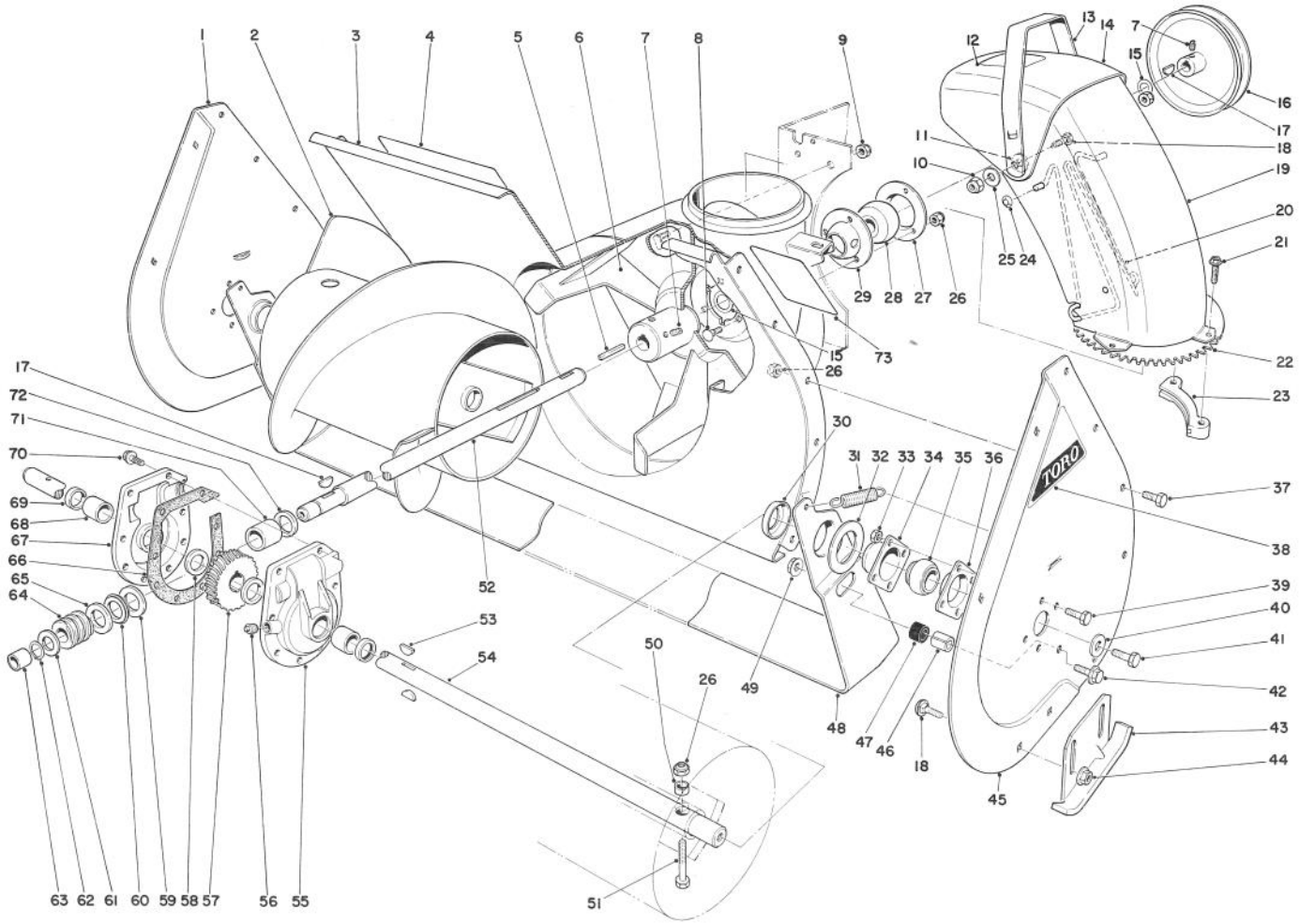

AUGER ASSEMBLY (Continued)

Ref. No.	Part No.	Description	No. Used
26	3296-29	Locknut	15
27	26-6120	Bearing Flange Rear	1
28	26-6100	Bearing Impeller	1
29	26-6110	Bearing Flange Front	1
30	26-6400	Positioner — Scraper Blade	2
31	5-7290	Spring — Scraper Blade	2
32	20-0300	Spacer — Scraper Blade	2
33	32152-4	Locknut	8
34	20-0990	Bearing Flange Auger	2
35	20-0980	Bearing Auger	2
36	20-1000	Bearing Flange Auger	2
37	322-2	Capscrew	10
38	17-6500	Decal — Auger Side Plate	2
39	321-3	Capscrew	8
40	3-0750	Flat Washer	2
41	323-6	Capscrew	2
42	3234-11	Hex Flange Bolt	2
43	20-2840	Skid	2
44	3290-357	Flange Nut	4
45	43-7430	Sideplate Auger Left	1
46	25-5140	Standoff — Scraper Blade	2

Ref. No.	Part No.	Description	No. Used
47	25-5150	Bumper — Scraper Blade	2
48	20-1320	Scraper Blade	1
49	32128-21	Locknut	2
50	25-5090	Spacer Auger Hub	2
51	17-7030	Bolt Auger	2
52	36-2580	Shaft Impeller	1
53	3257-33	Key Woodruff	2
54	20-1170	Shaft Auger	1
55	37-8860	Gear Case (Incl. Ref. #68 & 69)	1
56	281-1	Pipe Plug	1
57	5-7180	Gear Worm	1
58	252-71	Thrust Bearing	2
59	252-78	Thrust Washer	1
60	252-76	Thrust Bearing	1
61	3-8664	Thrust Washer	1
62	32120-72	Retaining Ring	1
63	256-32	Bushing	1
64	5-7170	Worm	1
65	252-77	Thrust Washer	1
66	51-0460	Gasket	1

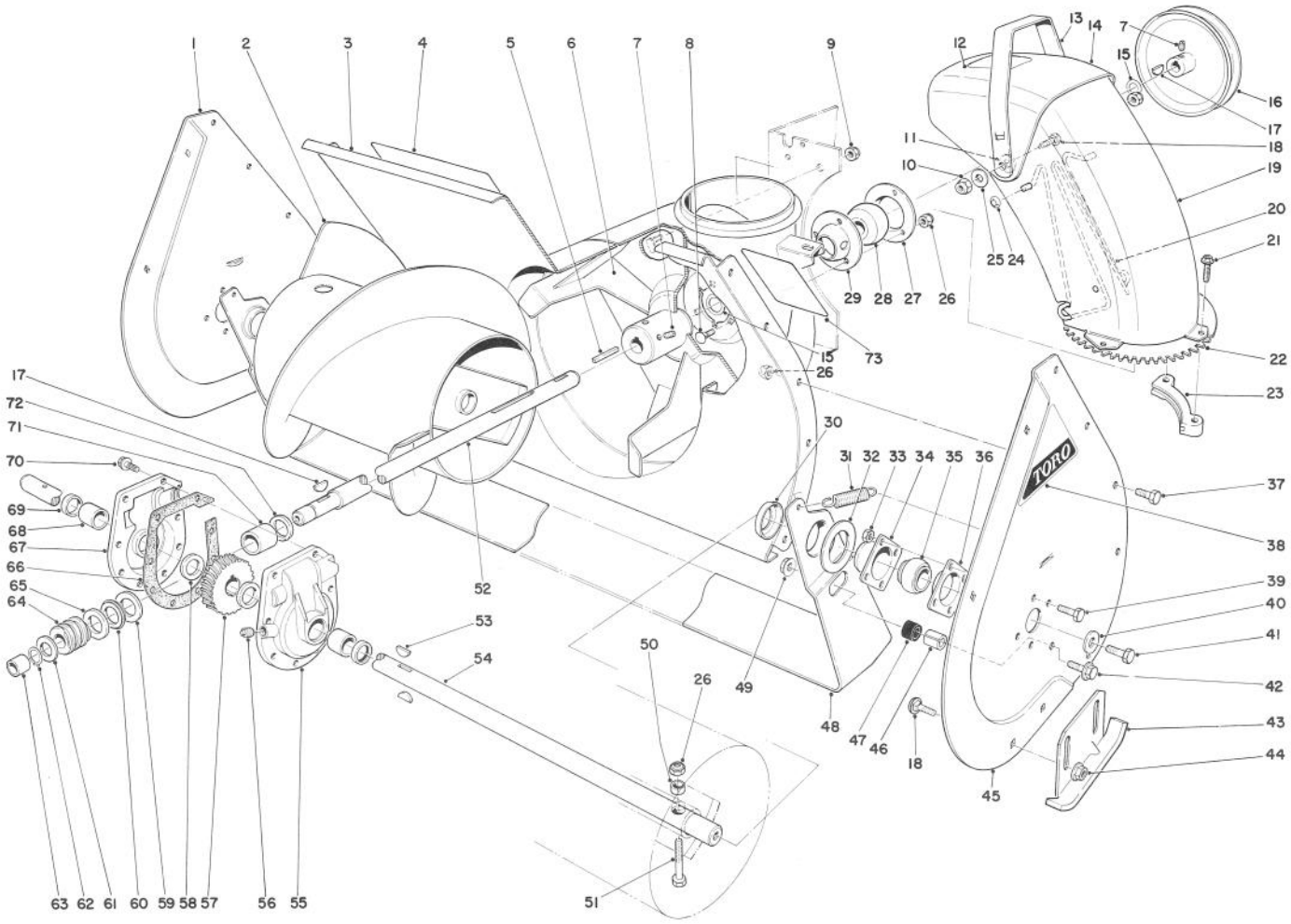

AUGER ASSEMBLY (Continued)

Ref. No.	Part No.	Description	No. Used
67	37-8850	Gear Case	
		(Incl. Ref. #68 & 69)	1
68	256-237	Bushing	2
69	7-0045	Oil Seal	2
70	32144-41	Thread Form Screw	8

Ref. No.	Part No.	Description	No. Used
71	20-3210	Bushing	1
72	237-87	Seal	1
73	53-7670	Decal — Auger Warning	1
*	19-7000	Gear Case Assembly Complete	1
*	20-0690	Drift Breaker Kit (Optional)	1

*Not Illustrated

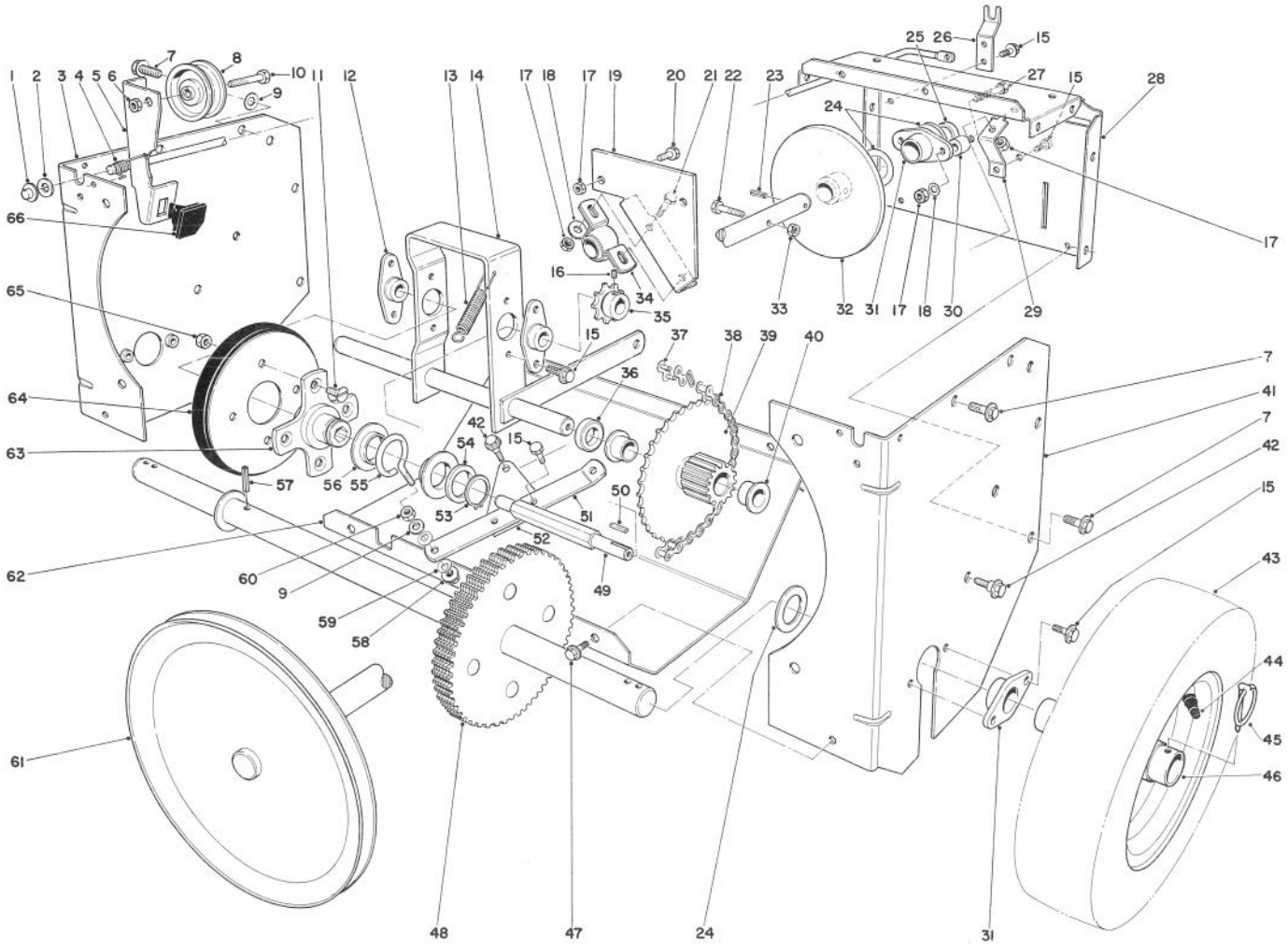

TRACTION ASSEMBLY

Ref. No.	Part No.	Description	No. Used
1	3290-383	Pushnut	1
2	3256-25	Flat Washer	1
3	20-1420	Side Plate Traction	1
4	20-1160	Torsion Spring Clutch	1
5	8-9019	Clutch Rod (Incl. Ref. #66)	1
6	3296-44	Locknut	1
7	32144-69	Hex Hd. Thread Forming Screw	8
8	3-4244	Idler Pulley	1
9	3256-45	Flat Washer	2
10	323-8	Capscrew	1
11	32108-94	Screw Flat Head	4
12	20-1620	Bearing Friction Wheel	2
13	11-4640	Spring — Clutch Control	1
14	20-1580	Pivot Shaft	1
15	32144-11	Screw Thread Forming	13
16	3245-32	Set Screw	2
17	3296-29	Locknut	7
18	3256-23	Washer	4
19	36-9990	Bracket — Shaft Support	1
20	322-2	Capscrew	2
21	322-3	Capscrew	2

Ref. No.	Part No.	Description	No. Used
22	321-33	Capscrew	1
23	32121-6	Roll Pin	1
24	3-0737	Thrust Washer	5
25	26-6370	Spacer Drive Shaft	1
26	20-1080	Support Clutch Rod	1
27	322-9	Capscrew	2
28	26-6360	Frame Center	1
29	20-1760	Pivot Bracket	1
30	26-6380	Standoff Drive Shaft	2
31	20-1730	Bearing Axle	3
32	20-1550	Friction Plate	1
33	32152-4	Locknut	1
34	36-9980	Bearing — Pillow Block	1
35	5-9820	Sprocket	1
36	3-7384	Spacer	1
37	2710-6	Connecting Link	1
38	20-1810	Chain	1
39	20-1640	Gear & Bushing (Incl. Ref. #40)	1
40	3-1506	Bushing — Flanged	2
41	20-1430	Side Plate Traction	1
42	11-8140	Shoulder Screw	3

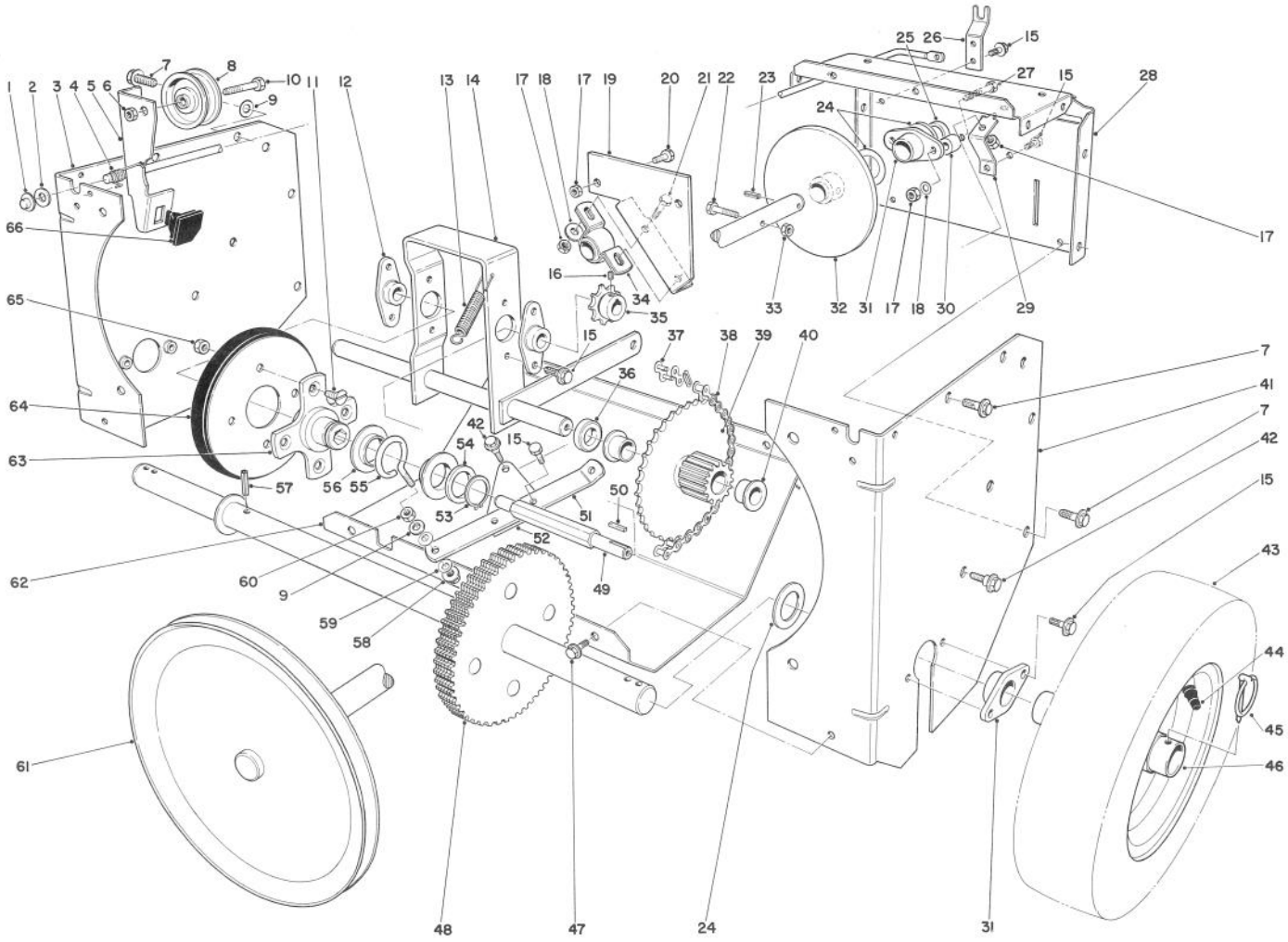

TRACTION ASSEMBLY (Continued)

Ref. No.	Part No.	Description	No. Used
43	231-120	Tire	2
44	232-46	Tube	2
45	3290-243	Klik Pin	2
46	241-124	Wheel	2
47	32144-10	Screw Thread Forming	4
48	20-1680	Axle & Gear	1
49	20-1630	Shaft Friction Wheel	1
50	3-6168	Square Key	1
51	20-1780	Linkage Shift	1
52	20-1770	Pivot Plate	1
53	32151-36	Snap Ring	1
54	252-71	Thrust Bearing	1
55	11-8050	Slider Ring Collar	1

Ref. No.	Part No.	Description	No. Used
56	11-8080	Ring — Slider	2
57	32121-9	Roll Pin	1
58	32128-12	Flange Nut	1
59	3290-212	Spring Washer	2
60	3296-6	Nut	1
61	22-7930	Drive Shaft	1
62	20-1840	Lower Shield	1
63	20-3310	Hub — Traction Disc	1
64	40-8170	Friction Wheel	1
65	3296-47	Nut — Lock	4
66	40-8140	Brake Pad — Molded	1
*†	56-2700	Tire Chain Kit	1
*	12-0169	Loose Parts	1

*Not Illustrated

†Optional Equipment

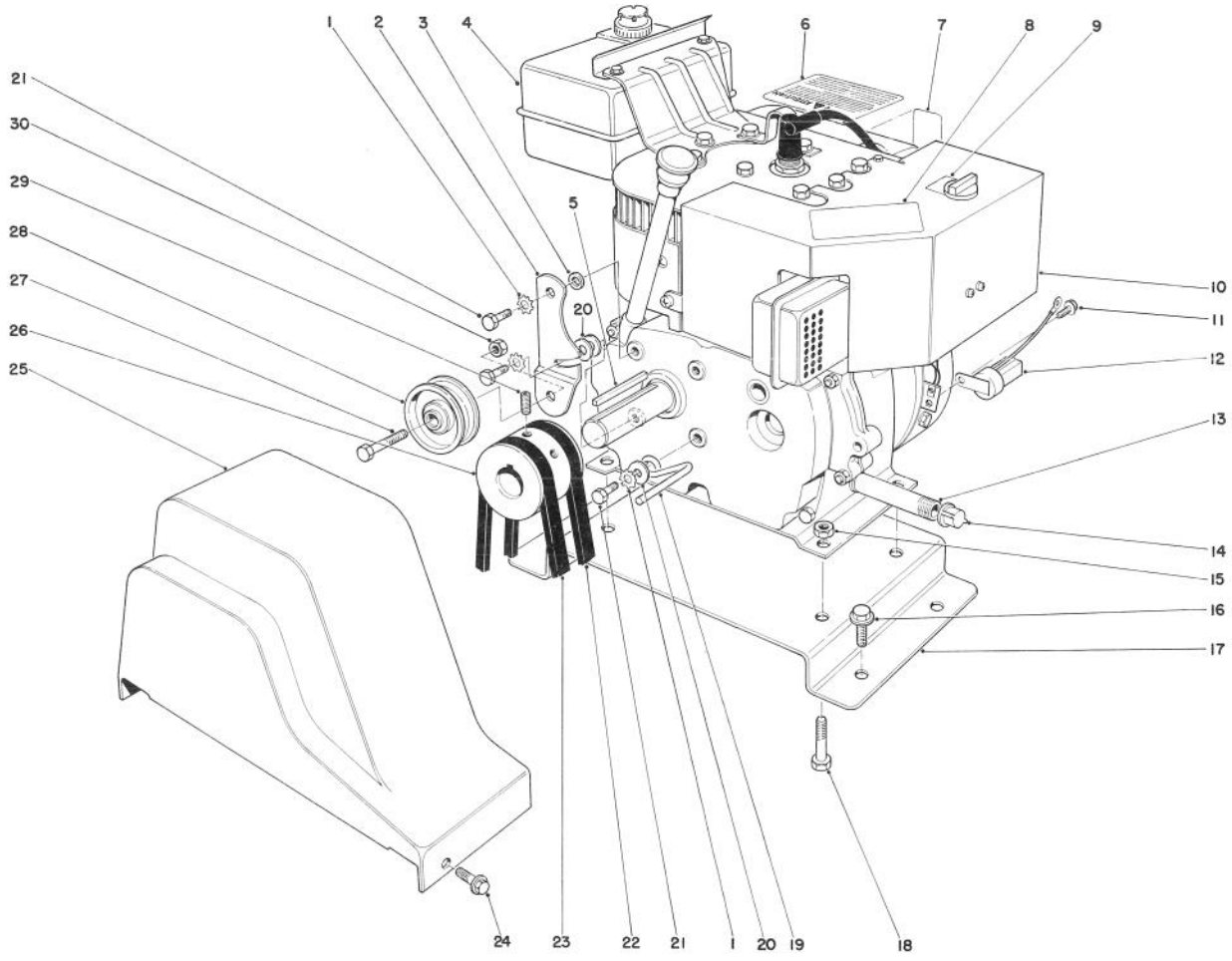

ENGINE ASSEMBLY

Ref. No.	Part No.	Description	No. Used
1	3255-8	Lockwasher	3
2	20-1800	Idler Arm	1
3	40-8490	Spacer	1
4	52-2680	Fuel Tank w/Cap	1
5	5-0930	Key	1
6	63-3730	Decal — Hazards Caution	1
7	62-5760	Decal — Primer	1
8	53-7680	Decal — Hot Surface Warning	1
9	39-3840	Decal — Choke	1
10		Engine	1
11	32144-4	Screw — Thread Forming	1
12	41-8601	Interlock Module	1
13	289-34	Pipe Nipple	1
14	288-2	Pipe Cap	1
15	3296-29	Locknut	4

Ref. No.	Part No.	Description	No. Used
16	32144-69	Hex Form Screw	4
17	25-5990	Plate — Engine Mounting	1
18	322-2	Capscrew	4
19	17-5530	Belt Retainer	1
20	3256-23	Washer	3
21	3210-3	Capscrew	3
22	20-1820	V-Belt Traction	1
23	26-9670	V-Belt Auger	1
24	32144-10	Screw Thread Forming	2
25	20-1830	Belt Guard	1
26	21-4100	Pulley	1
27	323-8	Capscrew	1
28	3-4244	Idler Pulley	1
29	3246-18	Set Screw	2
30	3296-44	Locknut	1

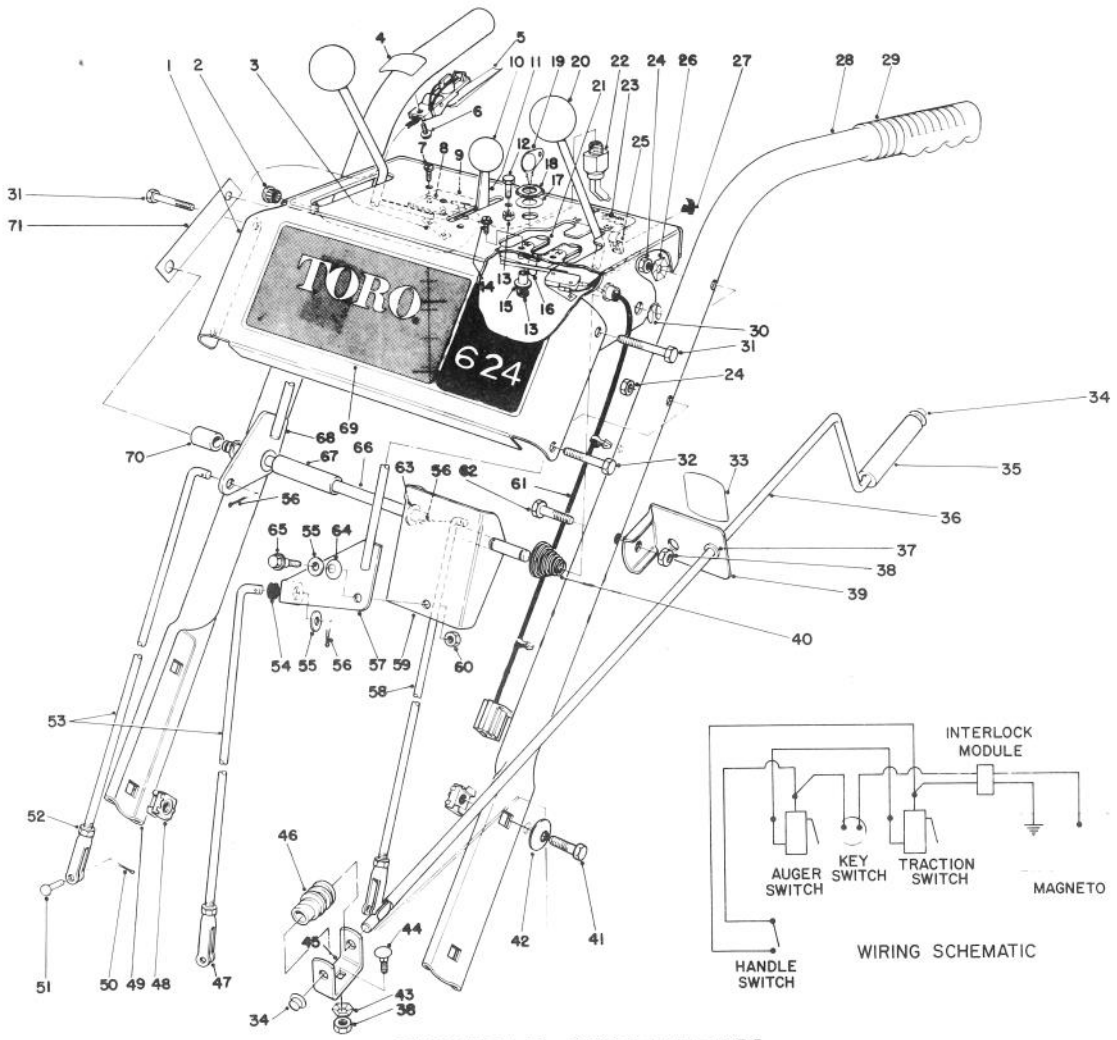

HANDLE ASSEMBLY

Ref. No.	Part No.	Description	No. Used
1	40-8470	Escutcheon Plate	1
2	237-130	Snap Bushing	1
3	3290-354	Clip	2
4	29-6360	Decal — Safety Interlock	1
5	40-9690	Interlock Handle & Switch	1
6	12-3270	Screw — Self Tapping	1
7	3290-313	Pan Head Machine Screw	4
8	40-8200	Micro Switch	2
9	22-7950	Switch Mounting Pad	1
10	233-36	Knob	1
11	40-8480	Throttle Control	1
12	32140-99	Hex Head Screw	2
13	3296-2	Locknut	4
14	3251-5	Machine Screw	2
15	22-9740	Spacer Interlock	2
16	22-9730	Spring Interlock	1
17	3254-5	Lockwasher	1
18	218-461	Hex Nut	1
19	62-7770	Key	2
20	233-21	Knob	2
21	22-9750	Slide Interlock	1
22	40-8240	On-Off Switch (Incl. Ref. #17 & 18)	1
23	29-6340	Decal — Instruction	1

Ref. No.	Part No.	Description	No. Used
24	32152-4	Locknut	4
25	43-7450	Wire Clamp	5
26	3290-257	Washer — Pyramidal	2
27	43-7460	Stud — Mounting	5
28	25-6040	Handle — Left	1
29	6-0450	Handle Grip	2
30	32151-43	Klip Ring	2
31	321-11	Capscrew	3
32	321-9	Capscrew	1
33	63-3510	Decal — Chute Direction	1
34	3290-320	Push-On Speed Nut	2
35	40-8230	Chute Control Grip	1
36	40-8380	Rod — Chute Control	1
37	256-249	Nyliner	1
38	3296-29	Locknut	2
39	12-7739	Chute Control Rod Mounting (Incl. Ref. #33 & 37)	1
40	17-5630	Spring — Conical	1
41	323-4	Hex Screw	4
42	3290-461	Washer — Belleville	4
43	3290-238	Washer Pyramidal	1
44	3230-2	Carriage Bolt	1
45	40-8280	Worm Bracket	1

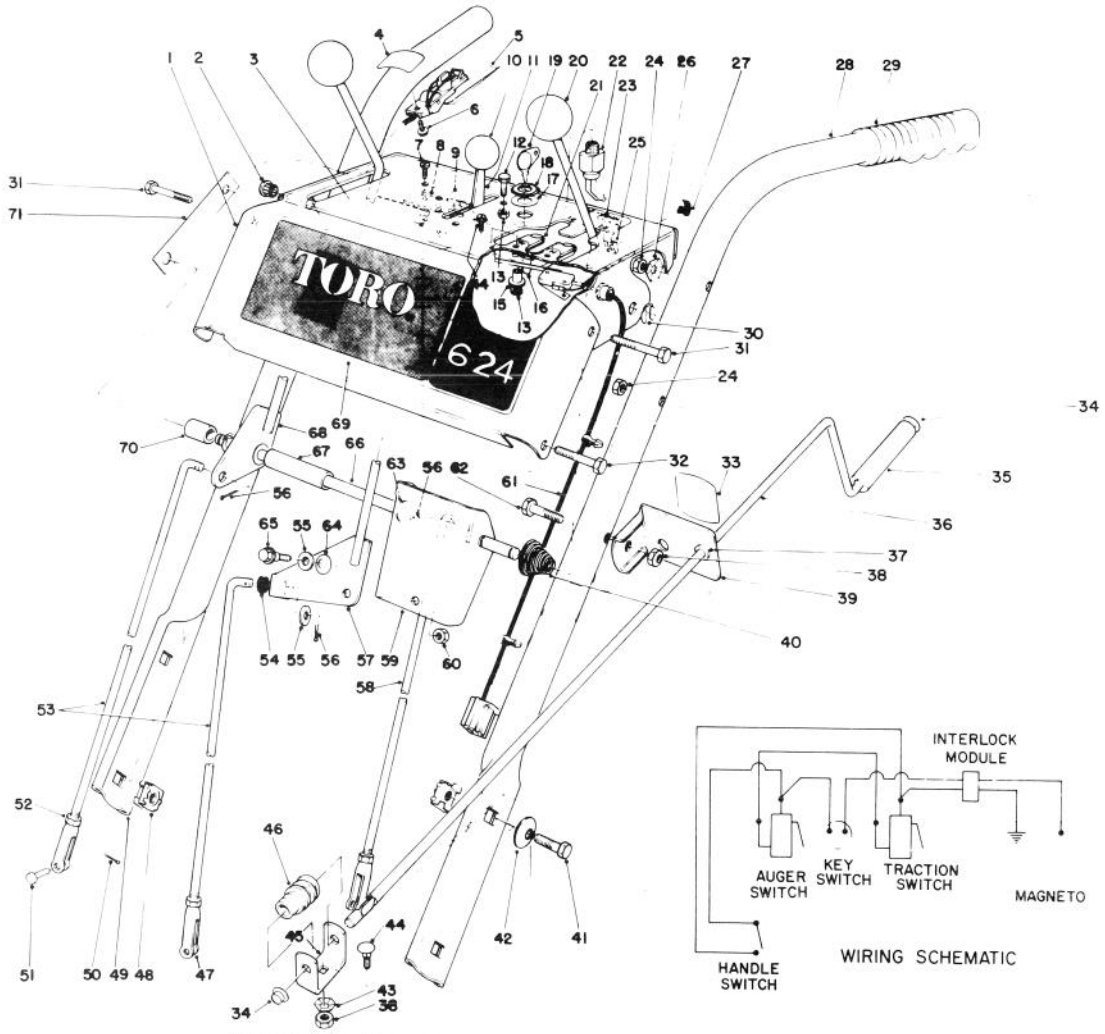

HANDLE ASSEMBLY (Continued)

Ref. No.	Part No.	Description	No. Used
46	40-8250	Worm — Chute	1
47	40-8180	Clevis	3
48	3290-398	Retainer Nut	4
49	40-8430	Handle — Right	1
50	3272-5	Cotter Pin	3
51	283-1	Clevis Pin	3
52	3220-3	Jam Nut	3
53	20-1980	Control Rod — Speed Select	2
54	237-89	Rubber — Grommet	1
55	3256-24	Washer	2
56	3272-6	Cotter Pin	3
57	20-2020	Shift Lever	1
58	20-1970	Control Rod — Traction	1
59	20-2010	Bracket — Shift	1

Ref. No.	Part No.	Description	No. Used
60	32152-1	Locknut	1
61	40-8630	Wire Harness — Interlock	1
62	322-9	Capscrew	1
63	3256-25	Washer	2
64	3290-213	Spring Washer	1
65	11-8140	Shoulder Screw	1
66	20-1910	Pivot Rod	1
67	28-5660	Spacer — Shift Lever	1
68	20-1920	Lever	1
69	63-3680	Decal — Escutcheon	1
70	28-5670	Spacer — Auger Lever	1
71	25-9760	Strap — Escutcheon Support	1
*	3290-378	Tie Wrap	2

*Not Illustrated

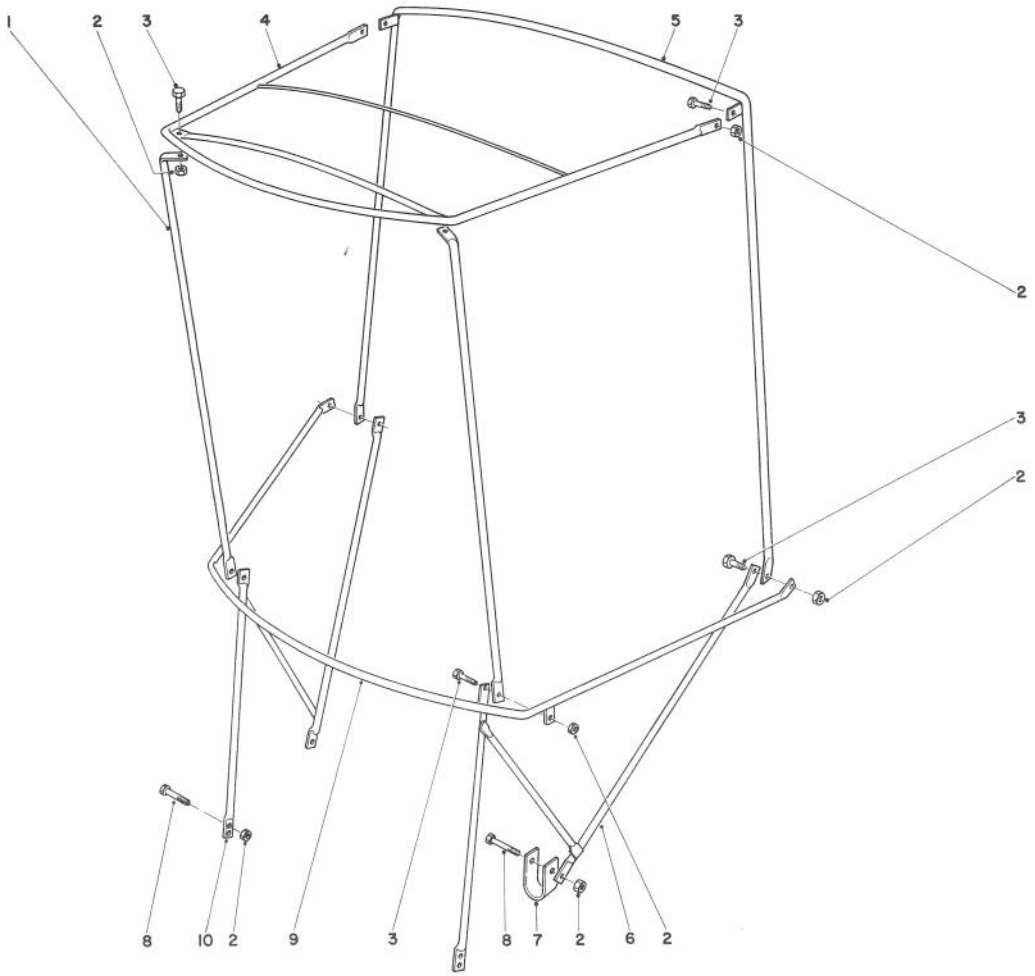

SNOW CAB ASSEMBLY MODEL 42-3380 (Optional)

Ref. No.	Part No.	Description	No. Used
1	12-8040	Front Corner Post	2
2	32153-4	Locknut	12
3	321-4	Capscrew	8
4	12-8010	Top Frame	1
5	12-8030	Rear Vertical Bow	1
6	42-4060	Attaching Bracket L.H.	1

Ref. No.	Part No.	Description	No. Used
7	12-8050	"U" Clamp	2
8	321-11	Capscrew	4
9	12-8020	Horizontal Curved Bow	1
10	42-4050	Attaching Bracket R.H.	1
*		Vinyl Cover	1

*Not Illustrated

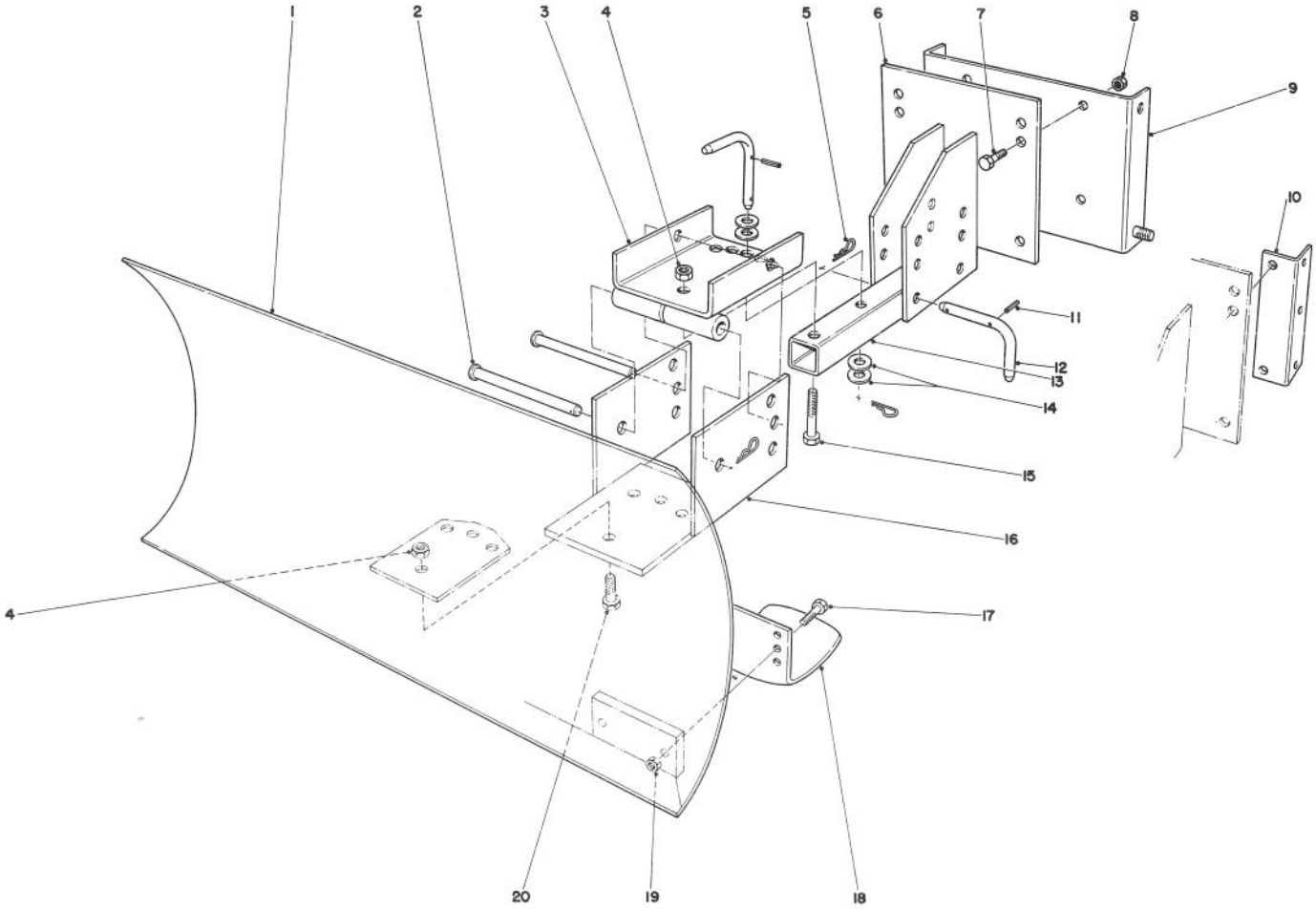

GRADER BLADE ASSEMBLY MODEL 59099 (Optional)

Ref. No.	Part No.	Description	No. Used
1	7-4374	Blade	1
2	283-38	Clevis Pin	2
3	20-5090	Swivel Bracket	1
4	32152-3	Locknut	5
5	3290-322	Hairpin Cotter	5
6	20-5170	Mounting Plate	1
7	323-6	Capscrew	4
8	32152-2	Locknut	4
9	22-4920	Mounting Plate (Used with 826 & 1132 Units only)	1
10	39-7850	Mounting Rail (Used with 3521 & 521 Units only)	2
11	32121-45	Roll Pin	3
12	20-5210	Pivot Pin (Incl. Ref. #11)	3
13	20-5140	Tongue Blade	1

Ref. No.	Part No.	Description	No. Used
14	3256-5	Flat Washer	4
15	325-11	Capscrew	1
16	20-5130	Blade Adjustment Plate	1
17	322-6	Capscrew	4
18	7-1023	Skid	2
19	32152-1	Locknut	4
20	325-5	Capscrew	4
*		Air Cleaner Kit (Tecumseh)	1
*†	650152	Screw	2
*†	31752	Decal	1
*†	31692	Body	1
*†	30727	Element	1
*†	28820	Screw With Lockwasher	2
*†	31691	Bracket	1
*†	27277	Gasket	1

*Not Illustrated
†Obtain from your local Tecumseh dealer

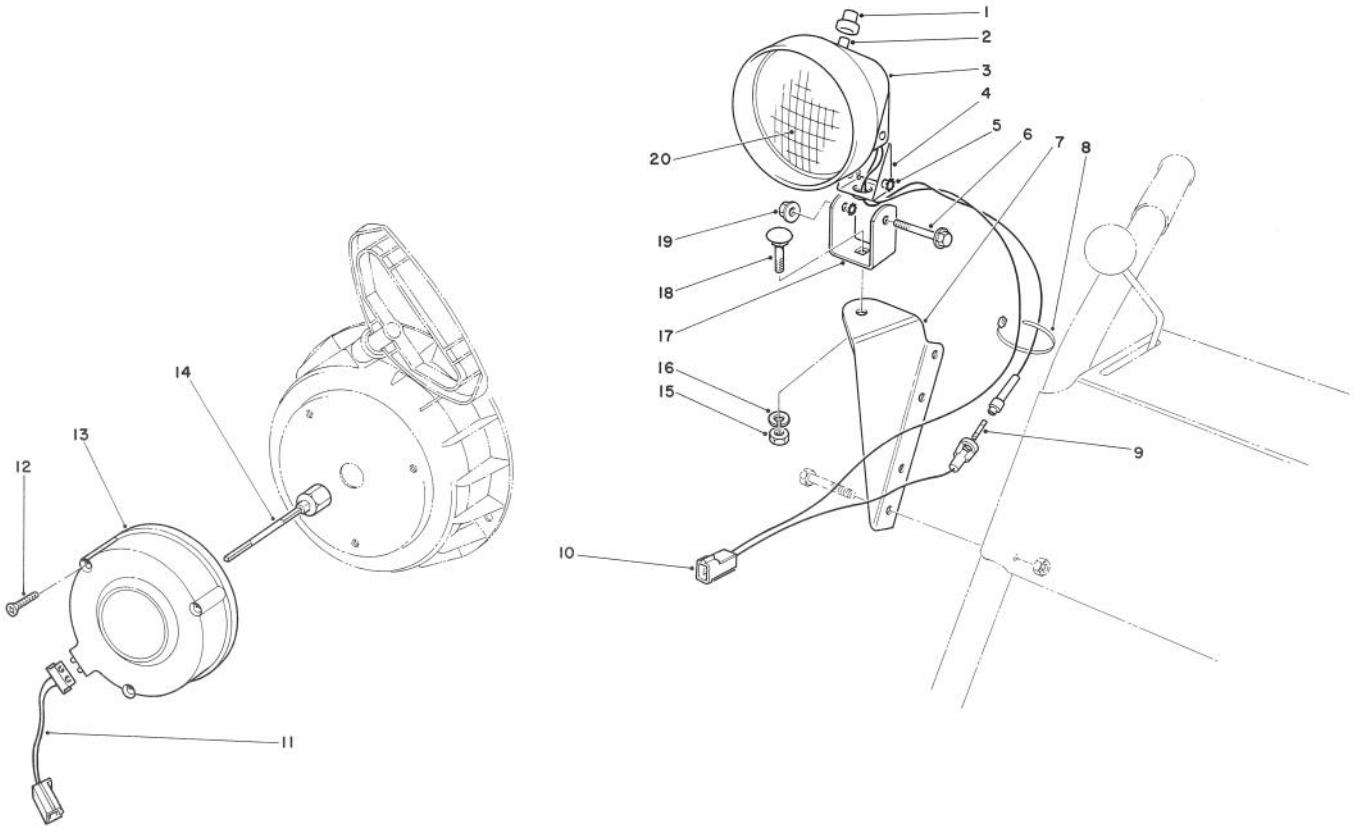

LIGHT KIT NO. 54-9821 (Optional)

Ref. No.	Part No.	Description	No. Used
1	218-473	Boot — Switch	1
2	218-553	Switch Assembly	1
3	218-552	Bucket — Headlamp	1
4	218-554	Bracket	1
5	3255-8	Washer — Lock	2
6	322-13	Screw — Hex. Flange Hd.	1
7	54-9830	Mount — Lamp	1
8	3290-378	Tie Wrap	2
†9		Fuse — 7½ Amp	1
10	218-555	Wire Assembly	1
11	2210-272	Connector — Light	1
12	2210-273	Screw — Self Tapping	3
13	2210-274	Alternator	1

Ref. No.	Part No.	Description	No. Used
14	2210-268	Shaft — Alternator — 3"	1
*	2210-269	Shaft — Alternator — 4" (Used with 824 Units Only)	1
15	3217-7	Nut — Hex	1
16	3253-21	Washer — Lock	1
17	218-556	Bracket — U	1
18	3231-2	Bolt — Carriage	1
19	32128-35	Nut — Flange Lock	1
20	218-16	Lens — Sealed Beam	1
*	54-9871	Headlamp Assembly Complete (Incl. Ref. #1-6, 9-10 & 15-20)	1

*Not Illustrated
†Obtain Locally

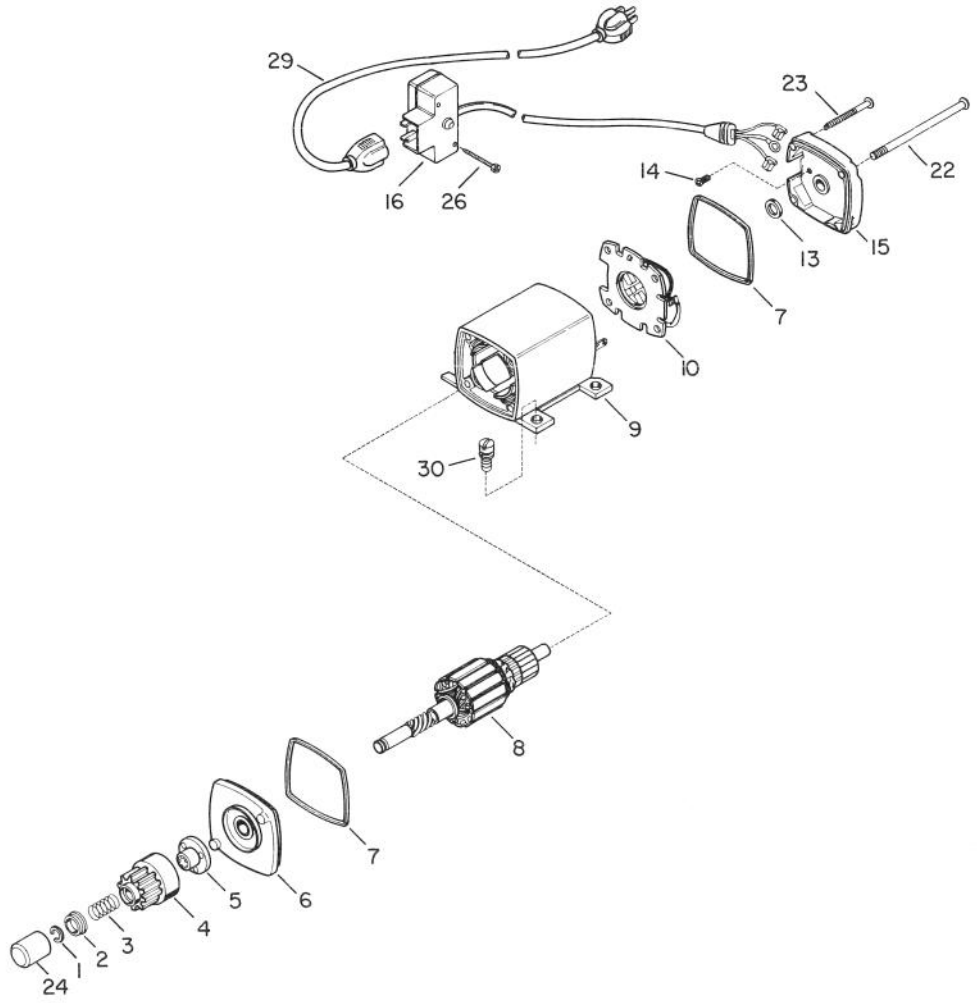

STARTER MOTOR KIT - MODEL 38-7590 (Optional)

Ref. No.	Part No.	Description	No. Used
1	33842	Ring, Retainer	1
2	33430	Retainer, Spring	1
3	33431	Spring, Anti-drift	1
4	33432	Gear	1
5	33433	Nut, Engaging	1
6	35449	Cap Assy., Drive End (Incl. Ref. #7)	1
7	35450	"O" Ring	2
8	33436A	Armature	1
9	35457	Housing Assembly	1
10	35452	Card Assembly, Brush	1

Ref. No.	Part No.	Description	No. Used
13	590500	Washer, Thrust	1
14	33441	Screw, Ground	1
15	35453	Cap Assembly, Commutator End (Incl. Ref. #7)	1
16	35454	Box Assembly, Switch	1
22	35458	Bolt, Case	2
23	35456	Screw, Grounding	1
24	33451	Cover, Dust	1
26	650819	Screw, Hex Hd. Self-Tap	2
29	32450A	Cord, Extension (10'6")	1
30	30063	Screw, Hex Washer Hd. Sems	4

Note: Order individual parts from your local Tecumseh dealer.

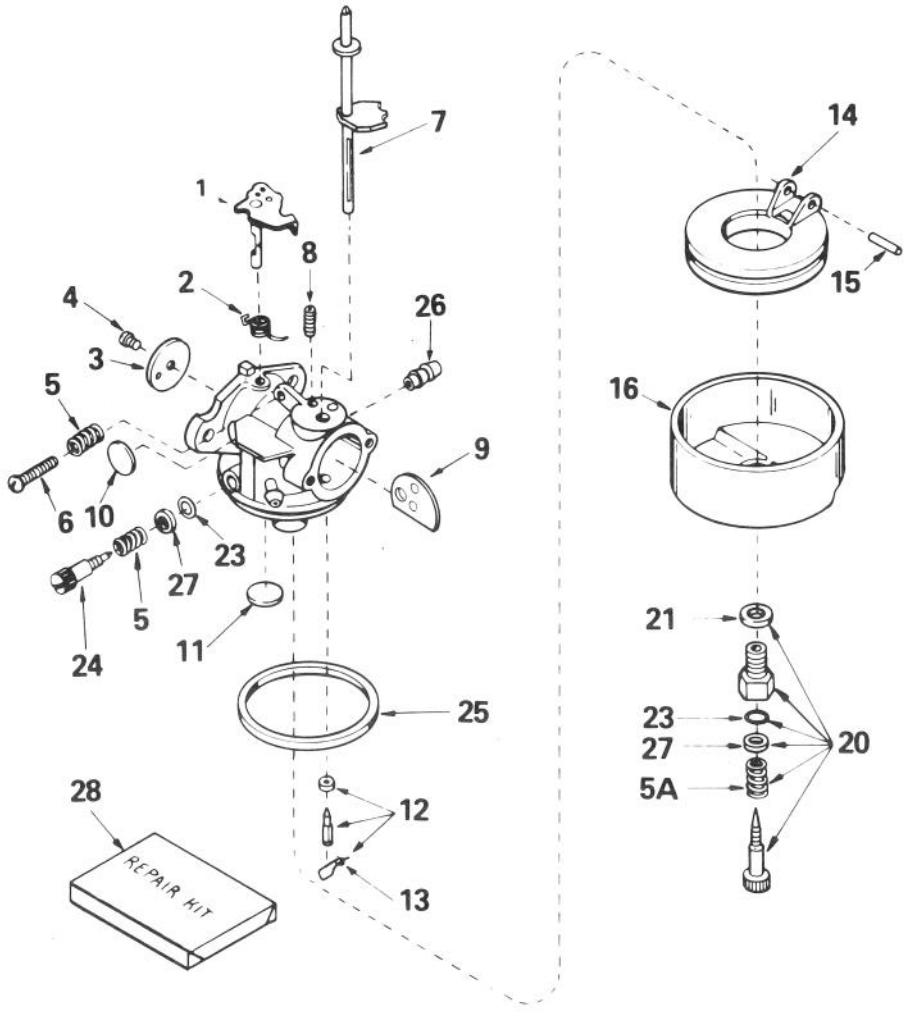

CARBURETOR NO. 632379

Ref. No.	Part No.	Description	No. Used
1	31834	Shaft & Lever Assy., Throttle	1
2	631767	Spring, Throttle Return	1
3	631036	Shutter, Throttle	1
4	650506	Screw, Throttle & Choke Shutter	1
5	630766	Spring, Regulating Screw	1
5A	630738	Spring, Main Adjustment Screw	1
6	650417	Screw, Idle Regulating	1
7	632373	Shaft & Lever Assy., Choke	1
8	630735	Spring, Choke Positioning	1
9	632372	Shutter, Choke	1
10	*630748	Plug, Welch	1
11	*631027	Plug, Welch	1
12	*631021	Inlet Needle, Seat & Clip Assy., (Incl. Ref. #13)	1

Ref. No.	Part No.	Description	No. Used
13	631022	Clip, Inlet Needle	1
14	632019	Float, Carburetor	1
15	*631024	Shaft, Float	1
16	631867	Bowl, Float	1
20	*31839	Adjustment Screw Assy., Main (Incl. Ref. #5A, 21, 23 & 27)	1
21	27110	Gasket, Bowl-to-Body	1
23	*630740	"O" Ring, Adjustment Screw	1
24	*631838	Screw, Idle Adjustment	1
25	*631028	Gasket, Bowl-to-Body	1
26	632164	Fitting, Fuel Inlet	1
27	630739	Washer, Flat	1
28	31840	Repair Kit (Incl. Items Marked *)	1

*Included in Repair Kit, Ref. #28.

ENGINE, TECUMSEH MODEL NO. H60-75503V

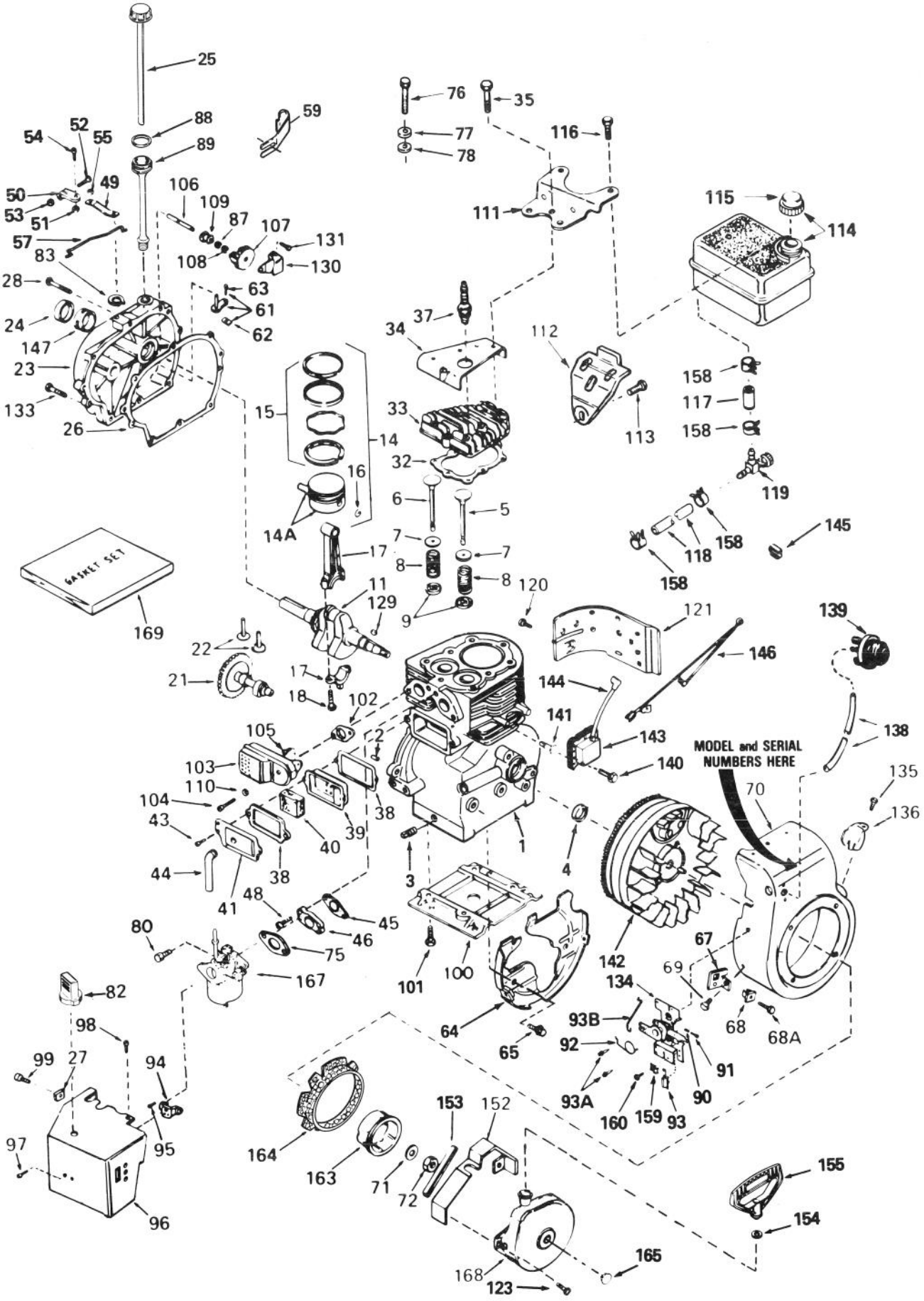

ENGINE TECUMSEH MODEL NO. H60-75503V

Ref. No.	Part No.	Description	No. Used
1	34919A	Cylinder Assy. (Incl. Ref. #2, 3 & 4)	1
2	27652	Pin, Dowel	2
3	27642	Plug. Sq. Hd. Pipe	2
4	32630	Seal, Oil	1
5	32783	Valve, Intake (Std.) (Incl. Ref. #9)	1
5	32784	Valve, Intake (1/32" oversize) (Incl. Ref. #9)	1
6	27878A	Valve, Exhaust (Std.) (Incl. Ref. #9)	1
6	27880A	Valve, Exhaust (1/32" oversize) (Incl. Ref. #9)	1
7	27882	Cap, Upper Valve Spring	2
8	27881	Spring, Valve	2
9	32581	Cap, Lower Valve Spring	2
11	35190	Crankshaft Assy. (Incl. Ref. #12 & 13)	1
14	34531	Piston, Pin & Ring Assy. (Std.) (Incl. Ref. #14A, 15 & 16)	1
14	34532	Piston, Pin & Ring Assy. (.010 oversize) (Incl. Ref. #14A, 15 & 16)	1
14	34533	Piston, Pin & Ring Assy. (.020 oversize) (Incl. Ref. #14A, 15 & 16)	1
14A	33312B	Piston & Pin Assy. (Std.) (Incl. Ref. #16)	1
14A	33313B	Piston & Pin Assy. (.010 oversize) (Incl. Ref. #16)	1
14A	33314B	Piston & Pin Assy. (.020 oversize) (Incl. Ref. #16)	1
15	34854	Ring Set, Piston (Std.)	1
15	34855	Ring Set, Piston (.010 oversize)	1
15	34856	Ring Set, Piston (.020 oversize)	1
16	27888	Ring, Piston Pin Retaining	2
17	31380C	Rod Assy., Connecting (Incl. Ref. #18)	1
18	650662C	Screw, Connecting Rod (2 each)	2
21	32115	Camshaft (Compress. Release)	1
22	34034	Lifter, Valve	2
23	31303B	Cover, Cylinder (Incl. Ref. #24, 106 & 147)	1
24	28427	Seal, Oil	1
25	35555	Dipstick, Oil	1
26	*30684	Gasket, Cylinder Cover	1
27	650764	Nut, "U" Type	1
28	650488	Screw, Hex Hd.	7
32	*28938B	Gasket, Cylinder Head	1
33	30938A	Head, Cylinder (Incl. 3 of No. 35)	1
34	30939A	Cover, Cylinder Head	1
35	650697A	Screw, Hex Flange Hd.	8
37	35395	Spark Plug, Resistor Champion RJ-19LM)	1

Ref. No.	Part No.	Description	No. Used
38	*27896	Gasket, Valve Spring Cover	2
39	28423	Body Assy., Breather	1
40	28424	Element, Breather	1
41	28425	Cover, Valve Spring	1
43	650128	Screw, Fil. Hd.	2
44	35350	Tube, Breather	1
45	*27915	Gasket, Intake	1
46	34712	Flange, Carburetor (Incl. Ref. #80)	1
48	30196	Screw, Fil. Hd.	2
49	33454	Lever, Governor	1
50	29916	Clamp, Governor Lever	1
51	30322	Locknut, Hex.	1
52	29826	Screw, Hex Washer Hd.	1
53	29216	Locknut, Hex.	1
54	650548	Screw, Hex Washer Hd.	1
55	29918	Lockwasher	1
57	34661	Link, Governor	1
59	35540	Clip, Fill Tube	1
61	30699C	Rod Assy., Governor (Incl. Ref. #62 & 63)	1
62	30700	Yoke, Governor	1
63	650494	Screw, Fil. Hd.	1
64	35326	Baffle, Blower Housing	1
65	650561	Screw, Hex Washer Hd.	2
67	34126	Bracket, Grommet Mounting	1
68	28545	Grommet, Plastic	1
68A	650643	Screw, Pan Hd. Self-Tap	1
69	29747B	Screw, Fil. Hex. Hd.	2
70	35260	Housing, Blower (Incl. Ref. #135 & 136)	1
71	650815	Washer, Belleville	1
72	650871	Nut, Flywheel	1
75	*31688	Gasket, Carburetor	1
76	650697A	Screw, Hex Flange	1
77	650690	Washer, Belleville	1
78	650691	Washer, Flat	1
80	650372	Screw, Hex Hd.	2
82	35439	Knob, Choke	1
83	29642	Ring, Retaining	1
87	30590A	Washer, Flat	1
88	35499	"O" Ring	1
89	35554	Tube, Oil Fill	1
90	31342	Spring, Compression	1
91	650549	Screw, Fil. Hd.	1
92	34663	Spring, Speed Control	1
93	610973	Terminal Assy.	1
93A	650821	Screw, Hex Washer Hd. Thread Cutting	2
93B	34662	Link, Throttle	1
94	32398	Bracket, Choke	1
95	28820	Screw, Fil. Hd.	2
96	35060	Cover, Carburetor	1
97	650257	Screw, Pan Hd.	2
98	650765	Screw, Hex Washer Hd. Self Drilling	1

*Included in Gasket Set, Ref. #169.

ENGINE, TECUMSEH MODEL NO. H60-75503V (Continued)

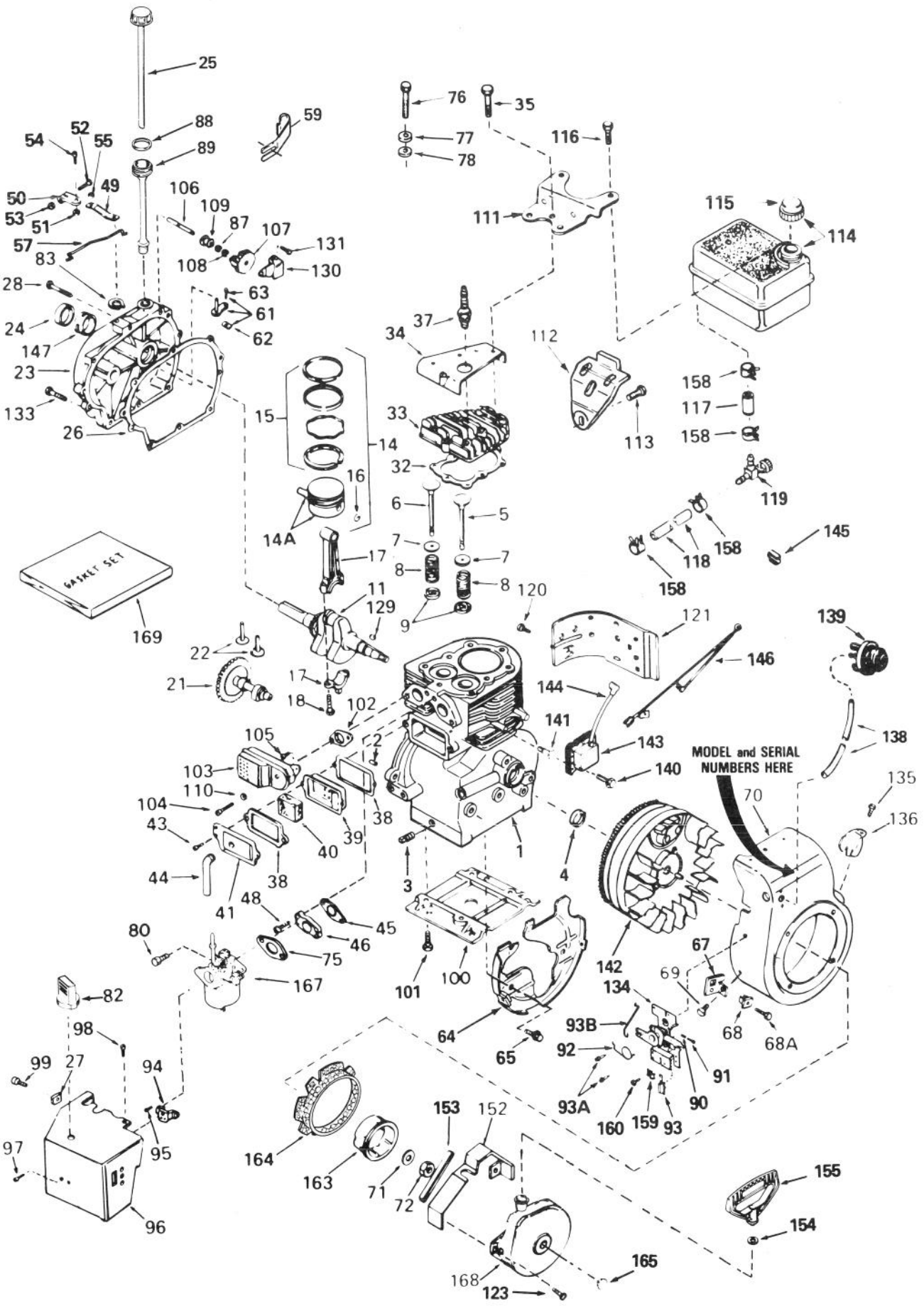

ENGINE TECUMSEH MODEL NO. H60-75503V (Continued)

Ref. No.	Part No.	Description	No. Used
99	650760	Screw, Pan Hd. Taptite	1
100	29538	Base, Engine Mounting	1
101	650542	Screw, Hex Hd.	4
102	*27930	Gasket, Muffler	1
103	32401	Muffler	1
104	650694A	Screw, Hex Flange Hd.	1
105	30196	Screw, Fil. Hd.	1
106	31845	Shaft, Mechanical Governor	1
107	30591	Gear Assy., Governor (Incl. Ref. #87)	1
108	29193	Ring, Retaining	1
109	30588A	Spool, Governor	1
110	26073	Washer, Flat	1
111	33166A	Bracket, Fuel Tank Mounting	1
112	34816	Bracket, Fuel Tank Mounting	1
113	650561	Screw, Hex Washer Hd.	1
114	34711	Tank, Fuel (Incl. Ref. #115)	1
115	34210	Cap, Fuel Tank	1
116	650665	Screw, Hex Washer Hd. Thread Cutting	2
117	30962	Line, Fuel	1
118	29774	Line, Fuel	1
119	32961	Valve, Fuel Shut-Off	1
120	650128	Screw, Fil. Hd.	1
121	30622A	Extension, Blower Housing	1
123	29716	Screw, Pan Hd.	4
129	32589	Key, Flywheel	1
130	31843A	Bracket, Governor Gear	1
131	650836	Screw, Hex Washer Hd., Thread Forming	2

Ref. No.	Part No.	Description	No. Used
133	650493	Screw, Hex Hd.	1
134	34664	Control Assy., Remote Speed (Incl. Ref. #90 thru 93)	1
135	650760	Screw, Pan Hd.	1
136	33013	Cover, Starter Bubble	1
138	32180C	Line, Primer	1
139	570682	Primer Assy.	1
140	650814	Screw, Hex Hd.	2
141	650872	Stud, Lamination Mounting	2
142	611085	Flywheel	1
143	34443A	Solid State Assy.	1
144	610118	Cover, Spark Plug	1
145	29443	Clip, Spring	1
146	35253	Wire, Ground	1
147	31546	Bushing, Crankshaft	1
152	34127	Guard, Starter	1
153	32576	Seal, Snow Guard	1
154	650168	Washer, Flat	1
155	590574	Starter Handle, Mitten Grip	1
158	26460	Clamp, Fuel Line	4
159	27793	Clip, Conduit	1
160	28942	Screw, Hex Washer Hd.	1
163	32125	Cup, Starter	1
164	35354	Screen, Starter	1
165	35161	Plug, Starter	1
167	632379	Carburetor (Incl. Ref. #75)	1
168	590604	Starter Assy., Rewind	1
169	33235	Gasket Set (Incl. Items Marked *)	1

*Included in Gasket Set, Ref. #169.

†Obtain from your local Tecumseh dealer.

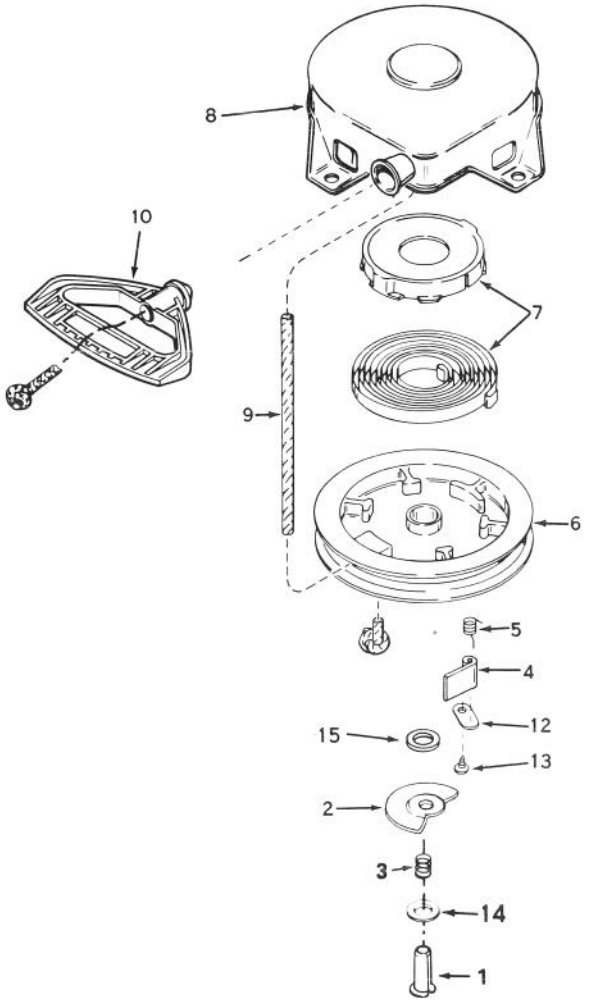

REWIND STARTER NO. 590604

Ref. No.	Part No.	Description	No. Used
1	590599A	Pin, Spring (Incl. Ref. #15)	1
2	590603	Cam, Dog	1
3	590598	Spring, Brake	1
4	590148	Dog, Starter	1
5	590475	Spring, Dog	1
6	590478	Pulley	1
7	590414	Spring & Keeper Assy.	1
8	590605	Housing, Starter	1

Ref. No.	Part No.	Description	No. Used
9	590451A	Rope, Starter	1
10	590574	Starter Handle, Mitten Grip (Not Included with Starter)	1
12	590476	Retainer, Dog	1
13	590477	Screw, No. 6 x 5/16	1
14	590600	Washer	1
15	590601	Washer	1

MAINTENANCE RECORD

Date	Hours Used	Oil Change	Lubrication	Summer Storage	Fall Service	Spark Plug Gap

IDENTIFICATION AND ORDERING

MODEL AND SERIAL NUMBERS

The Snowthrower has two identification numbers: a model number and a serial number. The two numbers are stamped on a decal which is located on back of engine mounting plate. In any correspondence concerning the Snowthrower, supply model and serial numbers to assure that correct information and replacement parts are obtained.

To order replacement parts from an Authorized TORO Service Dealer, supply the following information:

1. Model and serial numbers of the Snowthrower.
2. Part number, description, and quantity of part(s) desired.

Note: Do not order by reference number if a parts catalog is being used; use the PART NUMBER.

The Toro Promise

A Two Year Limited Warranty
On All
Gasoline Powered Consumer Products

The Toro Company promises to repair any TORO Product if defective in materials or workmanship. The following time periods from the date of purchase apply:

Residential Product . . . . . 2 Year
Residential Products Used Commercially . . . 45 Days

The costs of parts and labor are included, but the customer pays the transportation costs. Just return any residential product to an Authorized TORO Service Dealer or TORO Distributor.

Should you feel your TORO Product is defective and wish to rely on The Toro Promise, the following procedure is recommended:

1. Contact any Authorized TORO Service Dealer, TORO Master Service Dealer, or TORO Distributor (the Yellow Pages of your telephone directory is a good reference source).
2. He will either instruct you to return the product to him or recommend another Authorized TORO Service outlet which might be more convenient.
3. Bring the product along with your original sales slip, or other evidence of purchase date, to the service dealer.
4. The servicing dealer will inspect the unit, advise you whether the product is defective and, if so, make all repairs necessary to correct the defect without extra charge to you.

If for any reason you are dissatisfied with the dealer's analysis of the defect or the service performed, you may contact us.

Write:

TORO Consumer Service Department
8111 Lyndale Avenue South
Minneapolis, Minnesota 55420

The above remedy of product defects through repair by an Authorized TORO Service Dealer is the purchaser's sole remedy for any defect.

THERE IS NO OTHER EXPRESS WARRANTY. ALL IMPLIED WARRANTIES OF MERCHANTABILITY AND FITNESS FOR USE ARE LIMITED TO THE DURATION OF THE EXPRESS WARRANTY.

Some states do not allow limitations on how long an implied warranty lasts, so the above limitation may not apply to you.

This warranty applies only to parts or components which are defective and does not cover repairs necessary due to normal wear, misuse, accidents, or lack of proper maintenance. Regular, routine maintenance of the unit to keep it in proper operating condition is the responsibility of the owner.

All warranty repairs reimbursable under The Toro Promise must be performed by an Authorized TORO Service Dealer using Toro approved replacement parts.

Repairs or attemped repairs by anyone other than an Authorized TORO Service Account are not reimbursable under The Toro Promise. In addition, these unauthorized repair attempts may result in additional malfunctions, the correction of which is not covered by warranty.

THE TORO COMPANY IS NOT LIABLE FOR INDIRECT, INCIDENTAL OR CONSEQUENTIAL DAMAGES IN CONNECTION WITH THE USE OF THE PRODUCT INCLUDING ANY COST OR EXPENSE OF PROVIDING SUBSTITUTE EQUIPMENT OR SERVICE DURING PERIODS OF MALFUNCTION OR NON-USE.

Some states do not allow the exclusion or limitation of incidental or consequential damages, so the above limitation or exclusion may not apply to you.

This warranty gives you specific legal rights, and you may also have other rights which vary from state to state.

COUNTRIES OTHER THAN THE UNITED STATES OR CANADA

Customers who have purchased TORO products exported from the United States or Canada should contact their TORO Distributor (Dealer) to obtain guarantee policies for your country, province or state. If for any reason you are dissatisfied with your Distributor's service or have difficulty obtaining guarantee information, contact the TORO importer. If all other remedies fail, you may contact us at The Toro Company.

Compliance with Radio Interference Regulations Certified.
Certifie Conforme au Reglement sur le Brouillage Radioelectrique.

V33-832

Litho in U.S.A.