Form Number 3353-514 Rev A

826LE Power Max
Snowthrower

Model No. 38621 - 250000001 and up.

Parts Catalog

Ordering Replacement Parts

To order replacement parts, please supply the part number, the quantity, and the description of each part desired.

Understanding Reference Numbers

Each Identified part in an illustration has a reference number. The reference number for a part also appears in the parts list, along with other information about the part.

This catalog uses two special reference number formats, one to indicate parts in a service assembly and another to indicate the quantity of a given part in an illustration.

Service Assembly Reference Numbers

Parts in service assemblies have reference numbers in the form a:b. The a represents the reference number of the entire service assembly and the b represents a sequential number unique to each part within the service assembly.

For example, a wheel assembly might be identified by reference number 6, the tire by 6:1, the valve by 6:2, and the wheel by 6:3. When you order the assembly identified by reference number 6, you receive all parts identified by reference numbers 6:1, 6:2, and 6:3. However, you may also order any part individually. Reference numbers of this type appear in illustrations and in part lists.

Reference Numbers Indicating Quantity

In an illustration, if a reference number indicates more than one part, the reference number has the form nX y. The n represents the quantity of the part, the X is the multiplication symbol, and the y represents the reference number.

For example, in an illustration, the reference number 2X 37 means that two of the parts identified by reference number 37 are indicated.

©The Toro Company - 2005
All Rights Reserved

Register your product at www.Toro.com

Contents

Description	Page
Auger and Housing Assembly	3
Auger Gearcase Assembly No. 106-4580	4
Chute Assembly	5
Chain Drive Assembly	6
Frame Assembly	7
Handle Control Assembly	9
Handle and Control Assembly	10
Chute Control Assembly	11
Engine Assembly	12
Carburetor Assembly No. 640052 Tecumseh HMSK-80 155724X	13
Engine Assembly No. 1 Tecumseh HMSK-80 155724X	14
Engine Assembly No. 2 Tecumseh HMSK-80 155724X	16
220 Volt Electric Starter Assembly No. 37102 Tecumseh HMSK-80 155724X	18
Rewind Starter Assembly No. 590749 Tecumseh HMSK-80 155724X	19
Rewind Starter Assembly No. 590733 (Optional) Tecumseh HMSK-80 155724X	20

Part Description Abbreviations

Part descriptions in this catalog may include the following abbreviations.

AR	as required
ASM	assembly
CARR	carriage
DEG	degrees
EXT	external
FH	flat head
GA	gauge
HF	hex flange
HH	hex head
HHF	hex head flange
HHFTF	hex head flange thread forming
HJ	hex jam
HLH	hex lag head
HOC	height-of-cut
HS	hex
HSBH	hex socket button head
HSFH	hex socket flat head
HSH	hex socket head
HWH	hex washer head
HWHTF	hex washer head thread forming
HYD	hydraulic
INC	incorporated
LH	left hand
NI	nylon insert
NPTF	national pipe thread fine
PPH	phillips pan head
PRH	phillips round head
PTH	phillips truss head
PTO	power take off
RH	right hand
ROPS	roll over protection system
SFH	slotted fillister head
SHH	slotted hex head
SHWH	slotted hex washer head
SPH	slotted pan head
SQH	square head
SRH	slotted round head
STD	standard

Footnotes

❶ Not illustrated

❷ Not serviced separately

❸ Obtain parts from your local Tecumseh dealer

❹ Included in Gasket Set 36450C

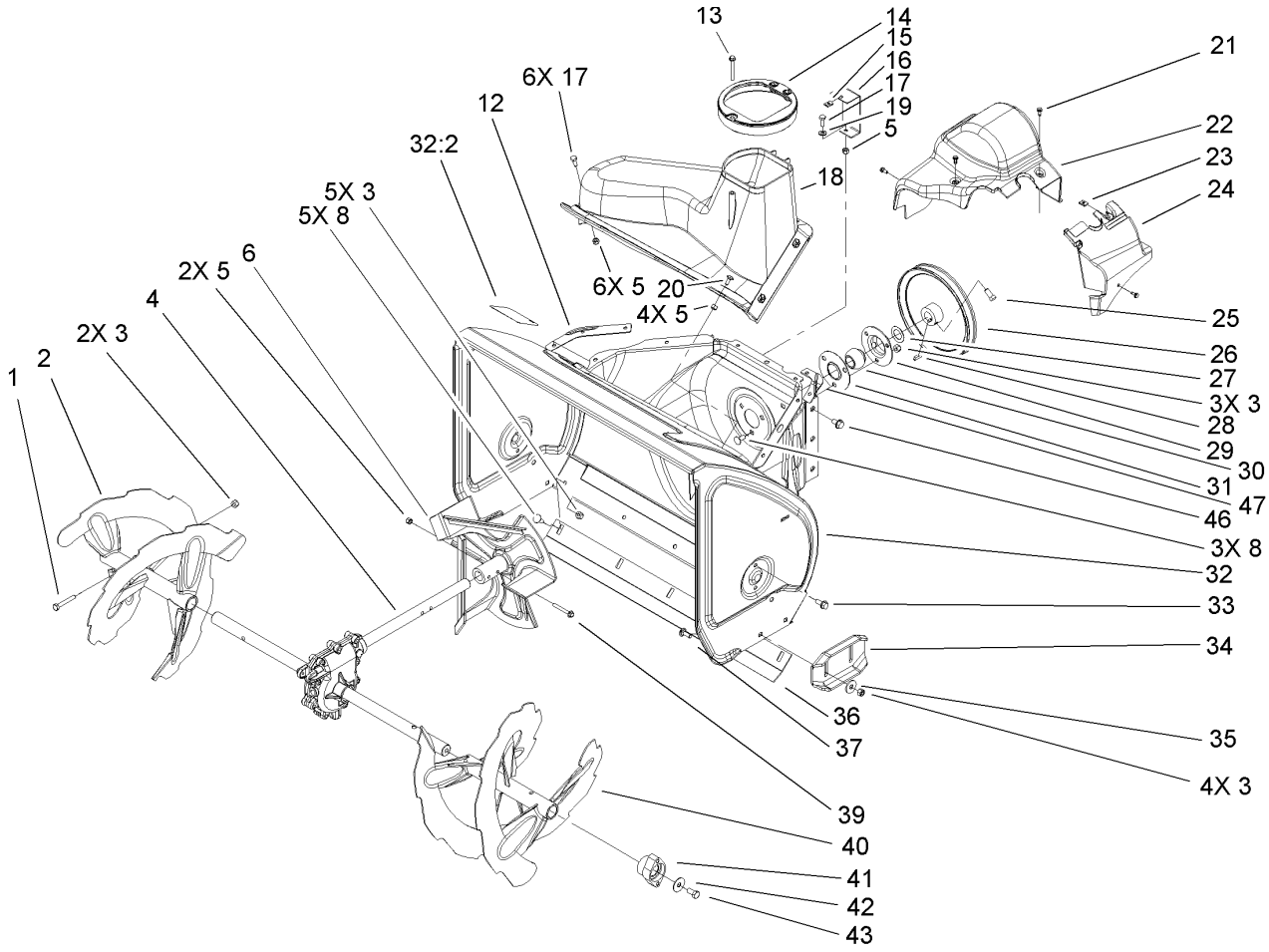

Auger and Housing Assembly

Ref	Part No.	Qty.	Description
1	322-10	2	Screw-HH
2	106-7289-03	1	RH Auger ASM
3	3296-29	14	Nut-Lock, NI
4	106-4580	1	26in Auger Gearcase ASM
5	3296-42	13	Nut-Lock, NI
6	106-4576-03	1	Impeller ASM
8	3230-23	8	Screw-CARR
12	107-1017-03	1	Seal-Flange, Cover
13	107-3003	1	Screw-Plastite
14	107-3006	1	Guide-Chute
15	107-1013	1	Nut-Speed, U-Type
16	107-1014-03	1	Bracket-Cover, Clip Nut
17	321-4	7	Screw-HH
18	108-0017	1	Cover
19	3256-22	1	Washer-Flat
20	3229-1	4	Screw-CARR
21	32144-112	4	Screw-HWH
22	107-1001	1	Cover-Belt
23	701493	1	Nut-Speed
24	107-1016	1	Cover-Extension, Belt
25	3242-4	2	Screw-Set, SQH
26	62-1300	1	Pulley-Impeller
27	252-80	1	Washer-Thrust
28	3257-23	1	Key-Woodruff

Ref	Part No.	Qty.	Description
29	26-6110	1	Flange-Cup, Bearing
30	63-3450	1	Bearing-Ball
31	26-6120	1	Flange-Cup, Bearing
32	107-3822	1	26in Auger Housing ASM
32:2	107-3040	1	Decal-Danger, Auger
33	32144-70	4	Screw-HH
34	106-4588-01	2	Skid
35	52-2861	4	Washer
36	105-9976-01	1	Scraper-Fixed
37	3230-16	4	Screw-CARR
39	321-44	2	Screw-HHF
40	106-7299-03	1	26in LH Auger ASM
41	106-4570	2	Auger-Bearing
42	3-0750	2	Washer
43	323-4	2	Screw-HH
46	32144-14	6	Screw-HWH
47	108-0039-03	1	Seal

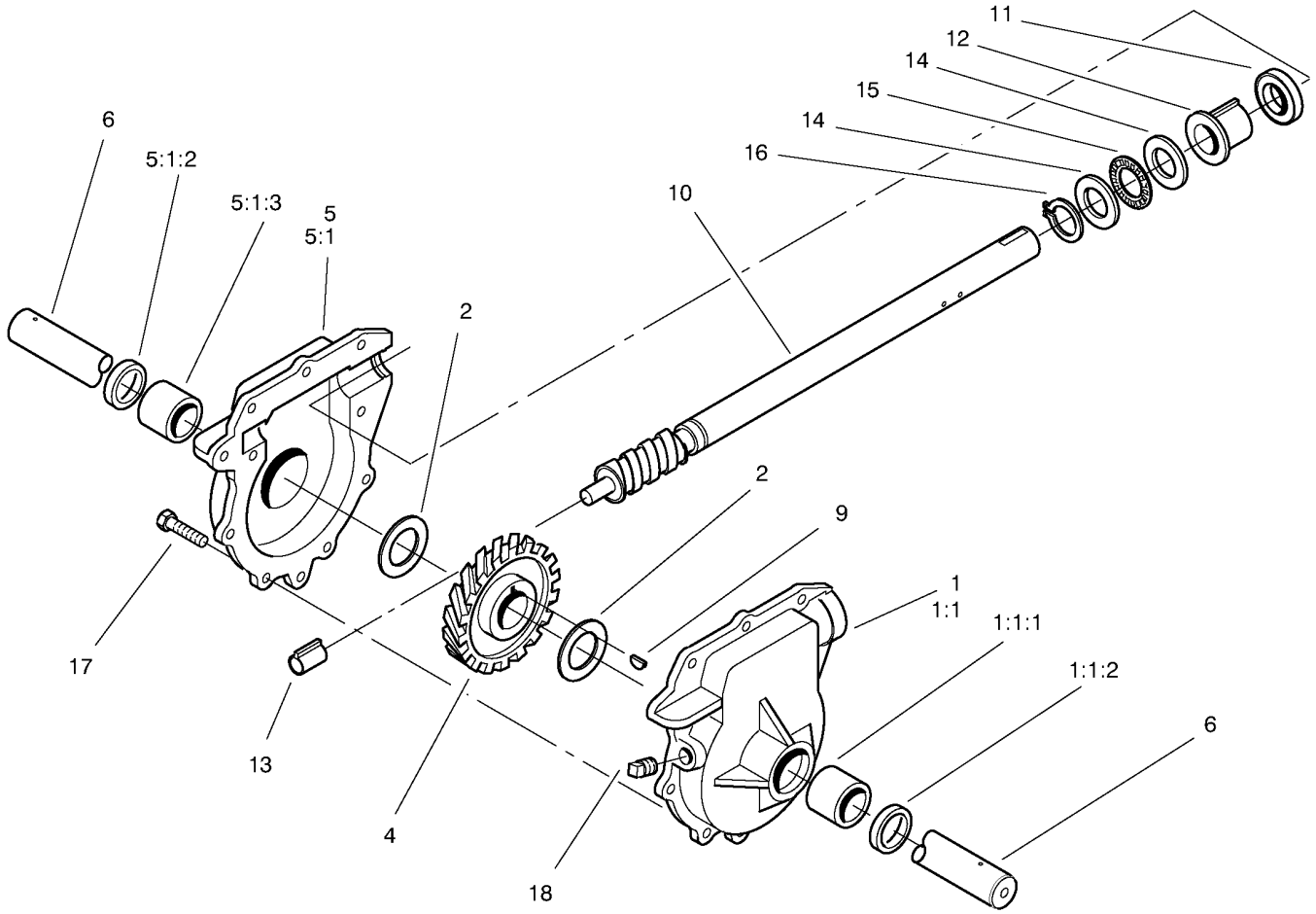

Auger Gearcase Assembly No. 106-4580

Ref	Part No.	Qty.	Description
1	74-1570	1	LH Auger Gearcase ASM
❷1:1		1	LH Auger Gearcase ASM
1:1:1	256-237	1	Bushing
1:1:2	7-0045	1	Seal-Oil
2	252-71	2	Washer-Thrust
4	62-0120	1	Gear-Helical
5	74-1580	1	RH Auger Gearcase ASM
❷5:1		1	RH Auger Gearcase ASM
5:1:2	7-0045	1	Seal-Oil
5:1:3	256-237	1	Bushing
6	106-4579	1	Shaft-Auger
9	3257-10	1	Key-Woodruff
10	66-7811	1	Shaft-Impeller
11	253-149	1	Seal-Oil
12	37-6560	1	Bushing-Input
13	62-1150	1	Bushing-Worm
14	252-78	2	Bearing-Thrust
15	252-76	1	Bearing-Thrust
16	32151-33	1	Ring-Retaining, Ext
17	32144-110	9	Screw-HWH
18	281-1	1	Plug-Pipe, SQH

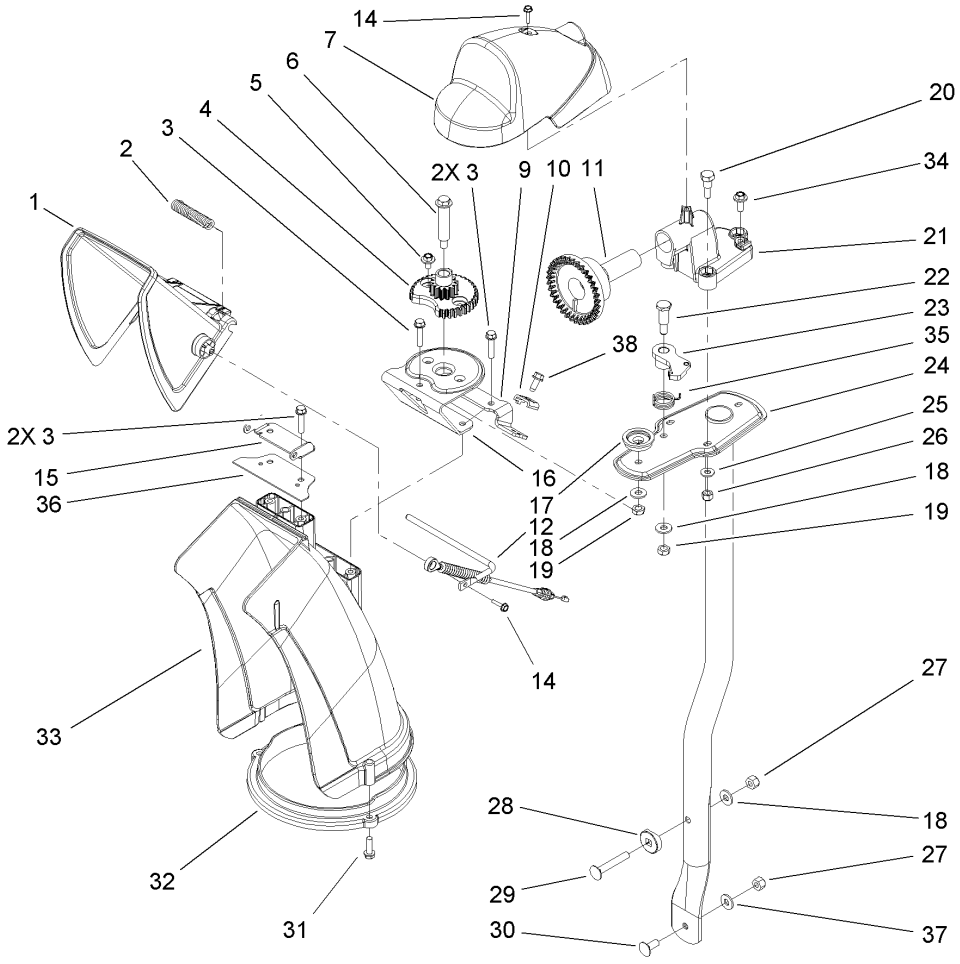

Chute Assembly

Ref	Part No.	Qty.	Description
1	106-7309	1	Deflector-Chute
2	106-4594	1	Spring-Torsion
3	46-8092	5	Screw-Plastite
4	106-4472	1	Gear-Chute
5	46-6810	2	Screw And Washer ASM
6	100-9880	1	Bolt-Shoulder
7	106-4585	1	Cover-Gear, Chute
9	106-7296	1	Bracket-Cable, Clamp
10	106-7297	1	Clamp-Cable
11	106-4471	1	Gear-Face
12	107-1021	1	Rod-Deflector
14	98-1375	2	Screw-HWH
15	106-7266	1	Bracket-Deflector
16	106-4582-03	1	Bracket-Support, Chute
17	106-4422	1	Spacer-Chute
18	3256-2	3	Washer-Flat
19	3296-47	2	Nut-Lock, NI
20	106-7276	3	Screw-Shoulder
21	106-7257	1	Mount-Gear, Face
22	63-2650	1	Screw-Shoulder
23	106-4476	1	Latch-Chute
24	106-7253-03	1	Tube-Support ASM
25	3256-22	3	Washer-Flat
26	3296-42	3	Nut-Lock, NI

Ref	Part No.	Qty.	Description
27	3296-29	2	Nut-Lock, NI
28	106-7260	1	Washer-Curved
29	3230-5	1	Screw-CARR
30	3230-23	1	Screw-CARR
31	46-8091	3	Screw-HWH
32	105-9991	1	Ring-Chute
33	106-4440	1	Chute-Discharge
34	46-6811	1	Screw-HWH
35	106-4475	1	Spring-Torsion
36	107-1019	1	Seal-Chute
37	3290-456	1	Washer-Belleville
38	32144-10	1	Screw-HWH

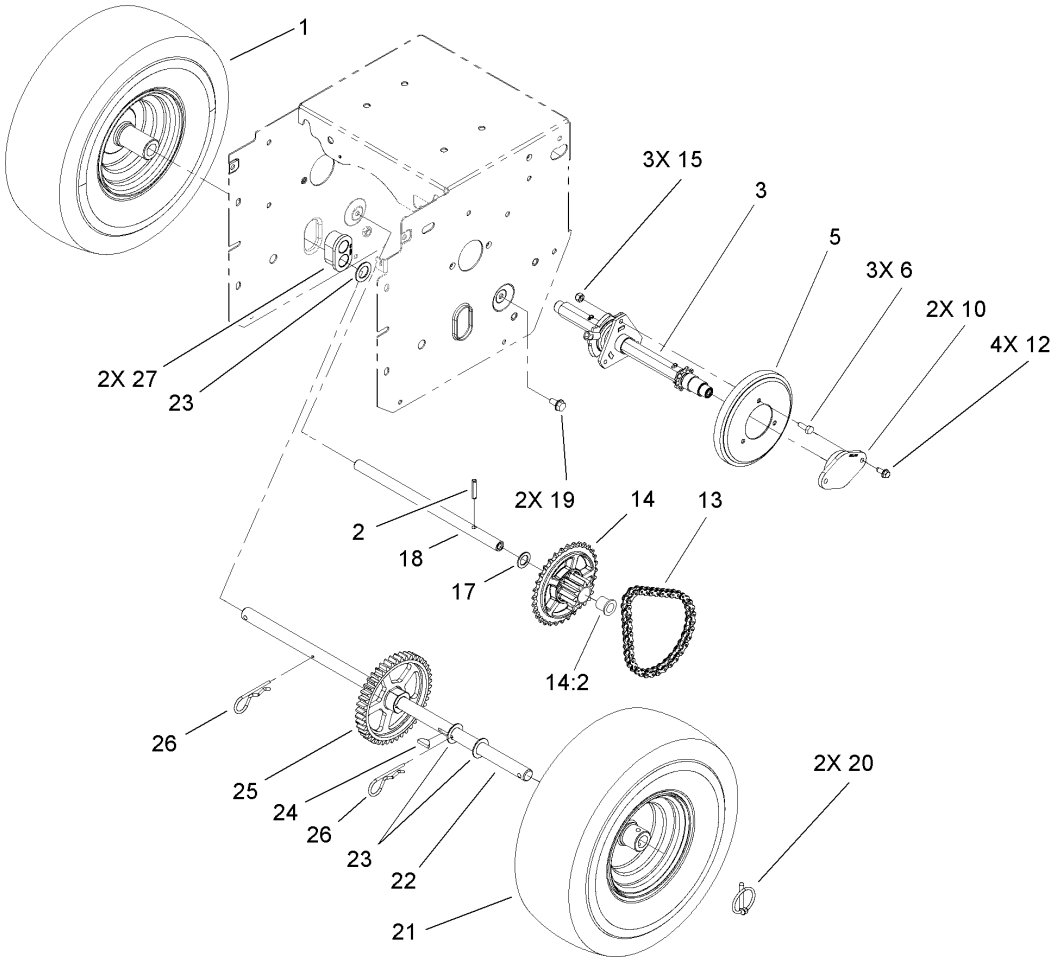

Chain Drive Assembly

Ref	Part No.	Qty.	Description
1	107-3042	1	Tire
1	107-3043	1	Rim-Tire
2	32121-9	1	Pin-Roll, Slotted
❷3		1	Hexshaft ASM
5	106-4480	1	Wheel-Friction
6	321-4	3	Screw-HH
10	108-2981	2	Retainer-Bearing
12	32144-10	4	Screw-HWH
13	108-0016	1	Chain-Roller
13	2710-6	1	Link-Connecting
14	108-0013	1	Sprocket ASM
14:2	108-2974	2	Bushing-Flange
15	3296-42	3	Nut-Lock, NI
17	107-3041	1	Washer-Flat
18	106-4592	1	Shaft-Intermediate
19	32144-14	2	Screw-HWH
20	107-3039	2	Klik Pin ASM
21	107-3042	1	Tire
21	107-3043	1	Rim-Tire
22	106-4449	1	Shaft-Axle
23	3-8664	3	Washer-Thrust
24	3257-7	1	Key-Woodruff
25	106-4572	1	Gear-Axle, 44 Tooth
26	3290-343	2	Pin-Hair

Ref	Part No.	Qty.	Description
27	106-4558	2	Bearing-Axle

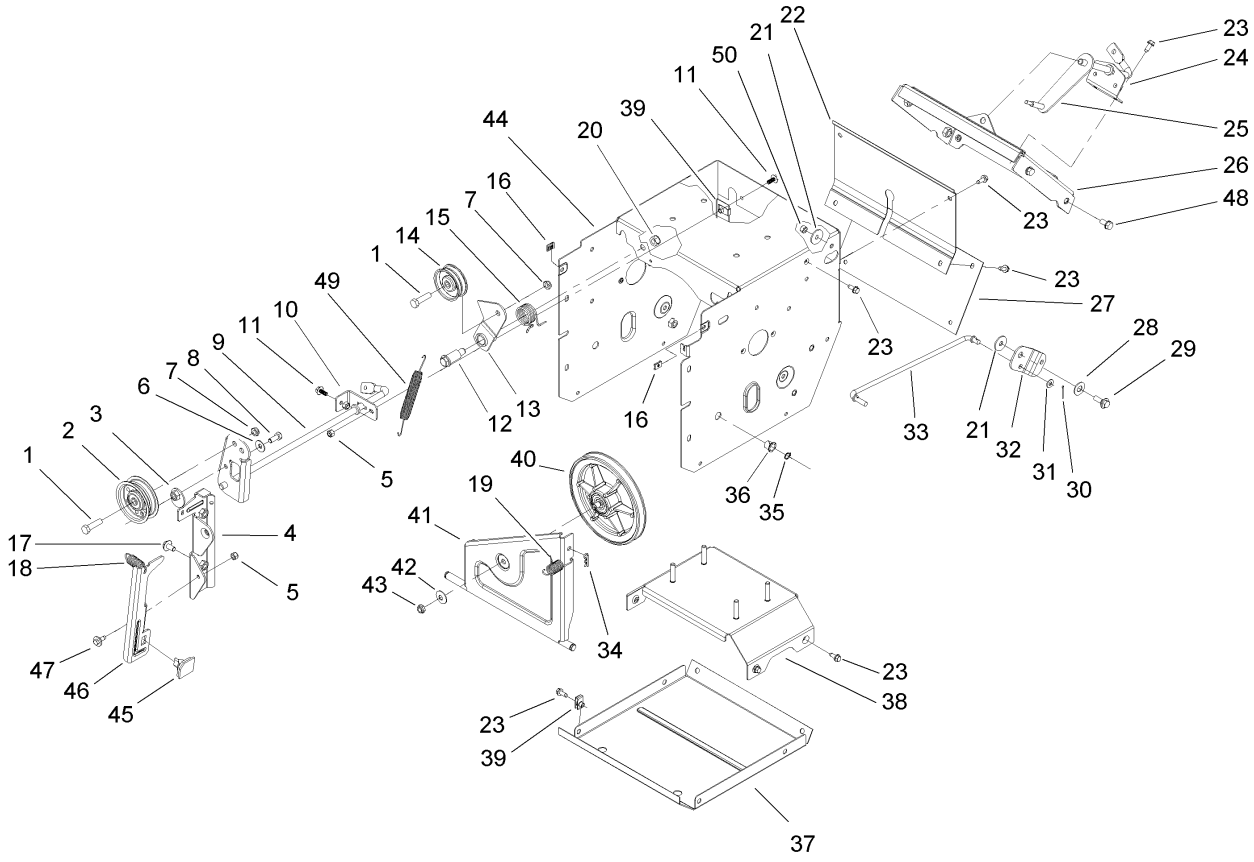

Frame Assembly

Ref	Part No.	Qty.	Description
1	323-8	2	Screw-HH
2	92-7104	1	Pulley-Idler
3	107-1047	1	Nut ASM
4	107-1039	1	Bracket-Idler, Impeller
5	3296-42	3	Nut-Lock, NI
6	3290-456	1	Washer-Belleville
7	3296-59	2	Nut-Lock, NI
8	322-3	1	Screw-HH
9	107-3838-03	1	Impeller Clutch ASM
10	106-7341	1	Bracket-Rear, Clutch
11	99-6810	2	Screw-HH
12	107-1022	1	Bolt-Shoulder
13	108-0011	1	Arm-Idler, Traction
14	3-4244	1	Pulley-Idler
15	108-0010	1	Spring-Torsion
16	107-1013	2	Nut-Speed, U-Type
17	3234-7	2	Screw-HHF
18	107-1045	1	Spring-Extension
19	107-1003	1	Spring-Extension
20	3296-76	1	Nut-Lock, NI
21	5-4460	2	Washer-Pivot
22	106-4556-01	1	Cover-Upper
23	32144-10	17	Screw-HWH
24	108-0036	1	Bracket-Shift Rod

Ref	Part No.	Qty.	Description
25	106-7268	1	Lever-Control, Traction
26	108-0026-01	1	Shift Plate ASM
27	106-7345-01	1	Cover-Lower
28	25-5640	1	Washer
29	27-0410	1	Screw-Shoulder
30	3272-4	1	Pin-Cotter
31	3256-23	1	Washer-Flat
32	107-1011	1	Bellcrank-Drive
33	106-4467	1	Link-Control, Speed
34	3290-307	1	Pin-Hair
35	32151-61	2	Ring-Retaining
36	256-257	2	Bushing-Nyliner
37	106-7330-01	1	Pan-Bottom
38	106-7315	1	Brace Frame ASM
39	107069	8	Clip
40	108-0031	1	Traction Pulley ASM
41	108-0032	1	Pulley Pivot ASM
42	3290-340	1	Washer-Belleville
43	3296-5	1	Nut-Lock
44	108-0019-01	1	Traction Frame ASM
45	66-8060	1	Pad-Brake
46	107-1000	1	Arm-Brake
47	92-9698	1	Screw-Shoulder
48	32144-14	4	Screw-HWH

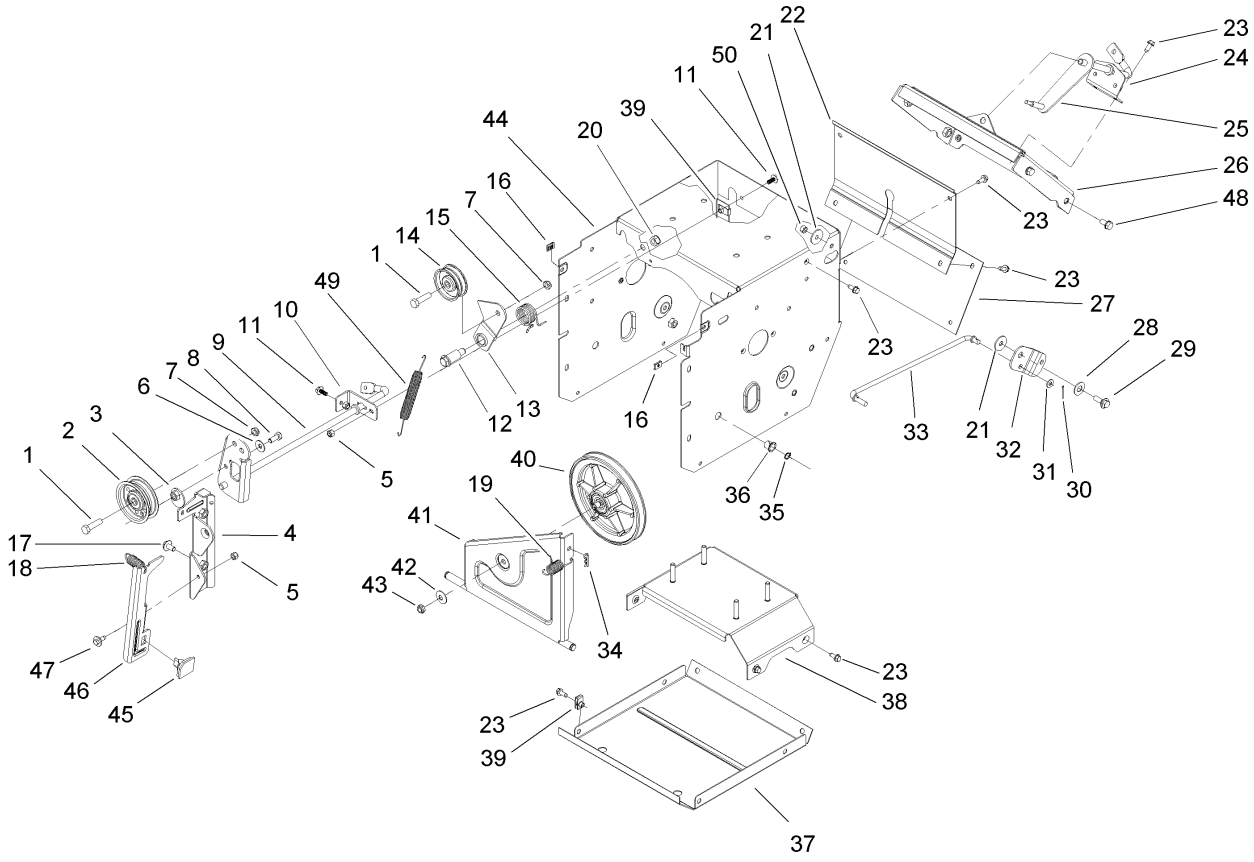

Frame Assembly (continued)

Ref	Part No.	Qty.	Description
49	108-2976	1	Spring-Extension
50	3296-29	1	Nut-Lock, NI

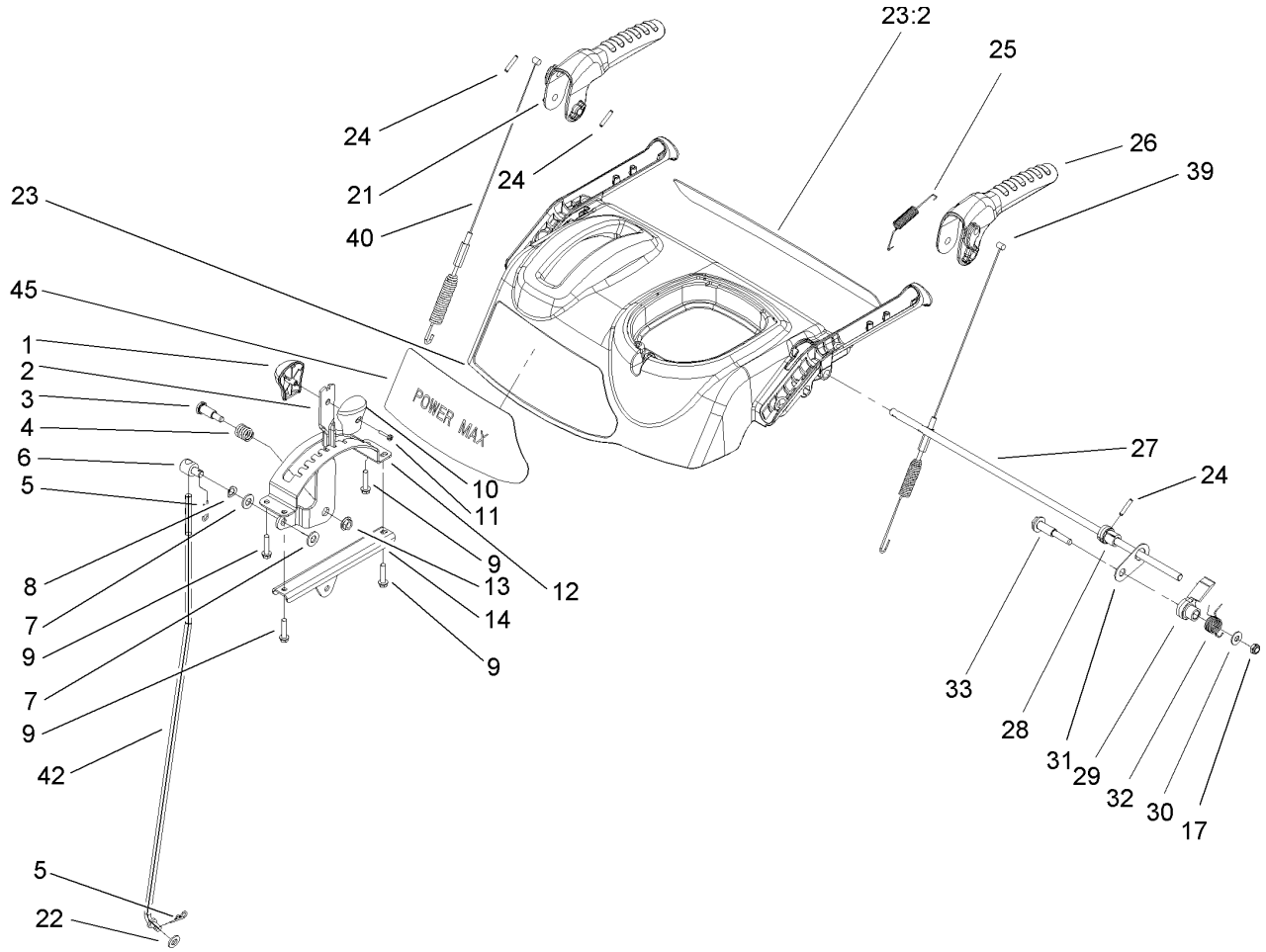

Handle Control Assembly

Ref	Part No.	Qty.	Description
1	106-4423	1	Knob-Shift, RH
2	106-7278-03	1	Selector-Speed
3	63-2650	1	Screw-Shoulder
4	107-3017	1	Spring-Compression
5	3290-307	2	Pin-Hair
6	101161	1	Trunnion
7	3256-24	2	Washer-Flat
8	612586	1	Washer-Spring
9	46-8092	4	Screw-Plastite
10	105-9999	1	Knob-Shift, LH
11	94-4496	1	Screw-PPH
12	106-7277-03	1	Guide-Selector, Speed
13	32128-13	1	Nut-HF
14	106-7279-03	1	Mount-Selector, Speed
17	3296-72	1	Nut-Lock, NI
21	106-4413	1	Lever-Auger
22	3256-38	1	Washer-Flat
23	107-3826	1	Control Panel ASM
23:2	106-4523	1	Decal-Panel, Back Control
24	32121-125	3	Pin-Spring
25	107-3001	1	Spring-Tension
26	106-4410	1	Lever-Traction
27	105-9996	1	Rod-Lockout
28	107-1043	1	Cam-Lockout

Ref	Part No.	Qty.	Description
29	108-0023	1	Latch-Lockout
30	98-3499	1	Washer-Flat
31	107-3000	1	Link-Lockout
32	108-0024	1	Spring-Torsion
33	106-4412	1	Screw-Shoulder
39	106-4563	1	Cable-Traction
40	106-4599	1	Cable-Auger
42	107-1005	1	Rod-Shift
45	106-4518	1	Decal

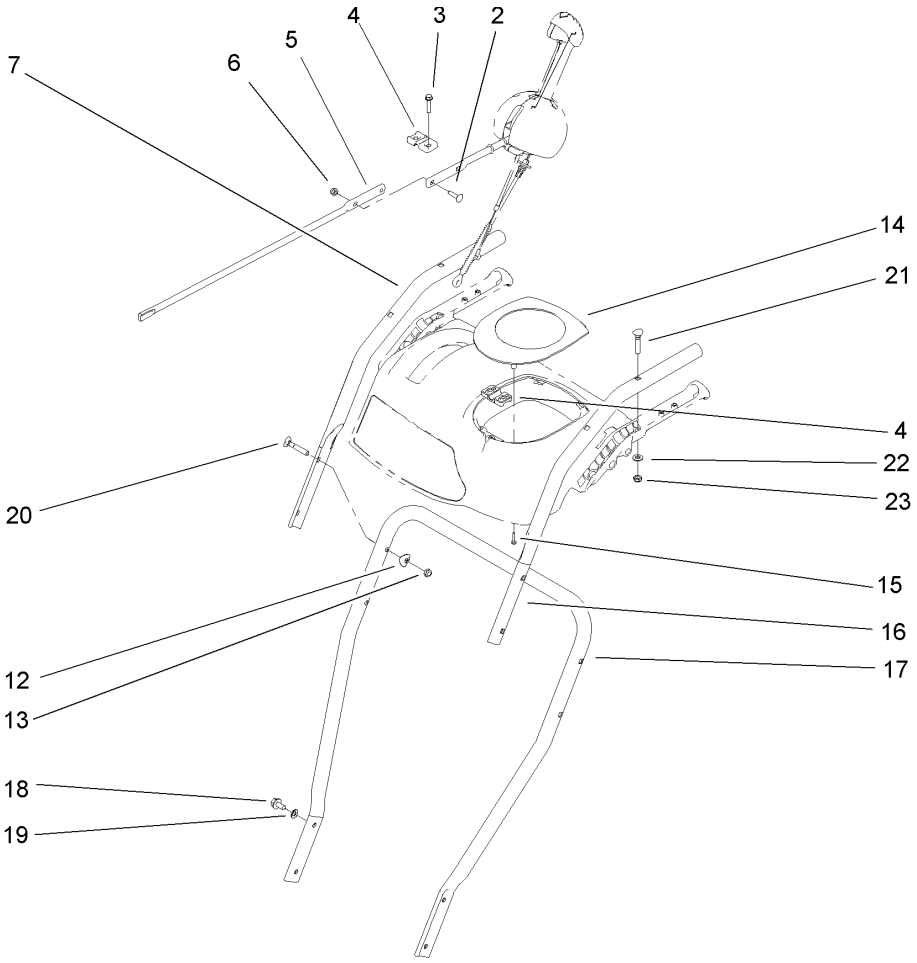

Handle and Control Assembly

Ref	Part No.	Qty.	Description
2	3229-30	2	Screw-CARR
3	46-8092	2	Screw-Plastite
4	105-9987	2	Support-Rod
5	106-7283	1	Rod-Chute, Front
6	3296-73	2	Nut-Lock, NI
7	108-0038-03	1	Handle-Upper, RH
12	107-3844	4	Washer
13	3296-72	4	Nut-Lock, NI
14	106-4586	1	Cover-Panel, Control
15	94-4496	2	Screw-PPH
16	108-0037-03	1	Handle-Upper, LH
17	105-9981-03	1	Handle-Lower
18	32144-14	4	Screw-HWH
19	3290-475	4	Washer-Belleville
20	92-2260	4	Screw-Handle
21	107-3018	4	Screw-Handle
22	3256-70	4	Washer-Flat
23	3296-72	4	Nut-Lock, NI

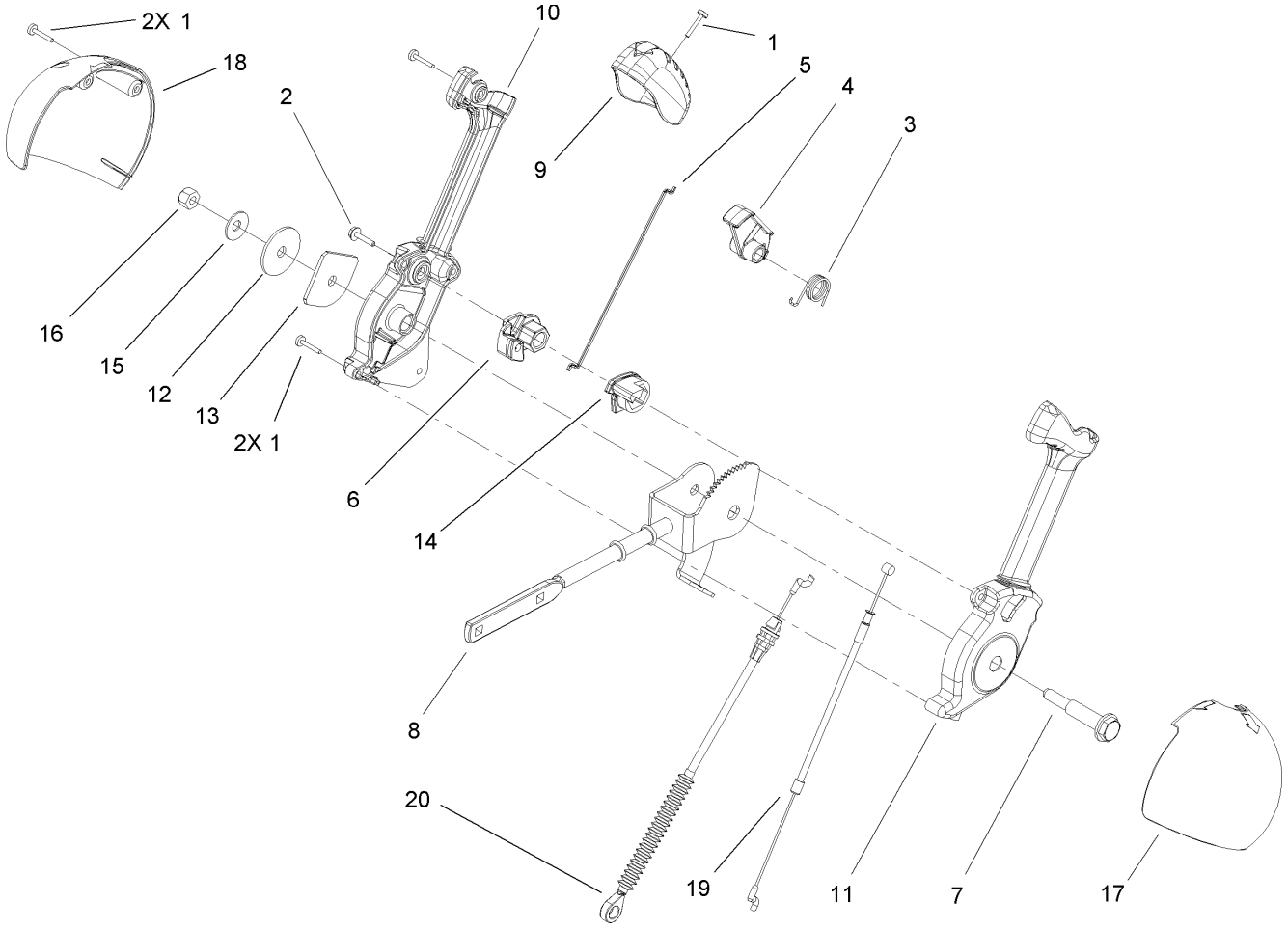

Chute Control Assembly

Ref	Part No.	Qty.	Description
1	94-4496	5	Screw-PPH
2	98-1375	1	Screw-HWH
3	105-9982	1	Spring-Torsion
4	105-9984	1	Trigger-Latch
5	105-9985	1	Link-Latch
6	105-9988	1	Lever-Cable, Deflector
7	105-9995	1	Screw-Shoulder
8	106-4479	1	Rod-Control, Chute
9	106-7280	1	Cap-Lever
10	106-7281	1	Lever-Chute Control, RH
11	106-7282	1	Lever-Chute Control, LH
12	107-3002	1	Washer-Nylon
13	106-7295	1	Plate-Friction
14	106-7310	1	Pawl-Latch
15	3290-456	1	Washer-Belleville
16	3296-29	1	Nut-Lock, NI
17	105-9986	1	Cover-Chute Lever, LH
18	106-7292	1	Cover-Chute Lever, RH
19	105-9989	1	Cable-Chute Release
20	105-9990	1	Cable-Control, Deflector

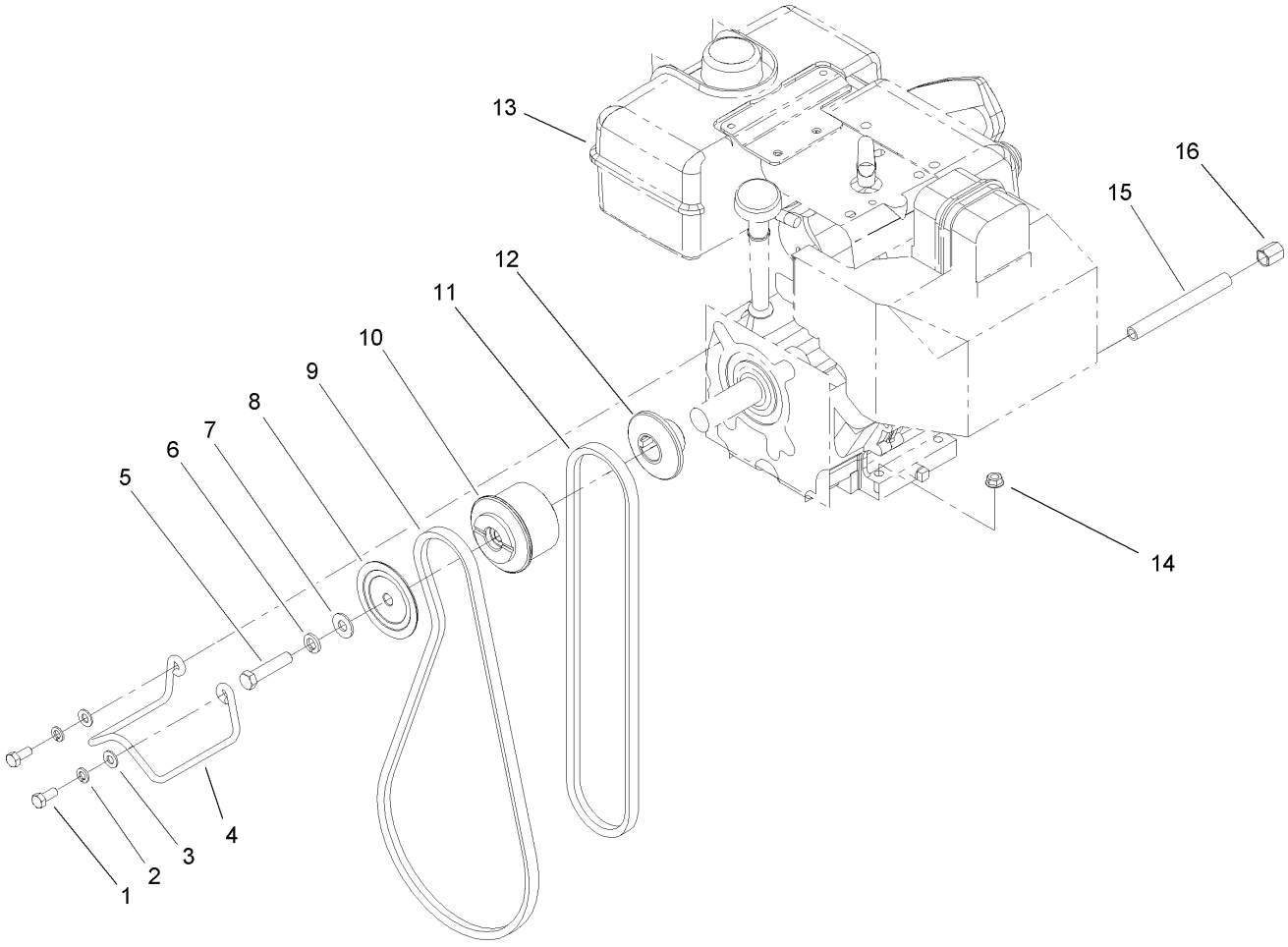

Engine Assembly

Ref	Part No.	Qty.	Description
1	3210-3	2	Screw-HH
2	3253-4	2	Washer-Lock
3	3256-23	2	Washer-Flat
4	107-3835	1	Guide-Belt
5	3212-8	1	Screw-HH
6	3253-6	1	Washer-Lock
7	3256-4	1	Washer-Flat
8	62-0940	1	Sheave-Half, Impeller
9	106-4498	1	Belt-V
10	106-7333	1	Pulley-Engine, Center
11	94-8812	1	V Belt-Traction
12	106-7334	1	Sheave-Half, Traction
❷13		1	Engine-Tecumseh, Hmsk-80 155724x
14	32128-20	4	Nut-HF
15	289-34	1	Nipple-Pipe
16	288-2	1	Cap-Pipe

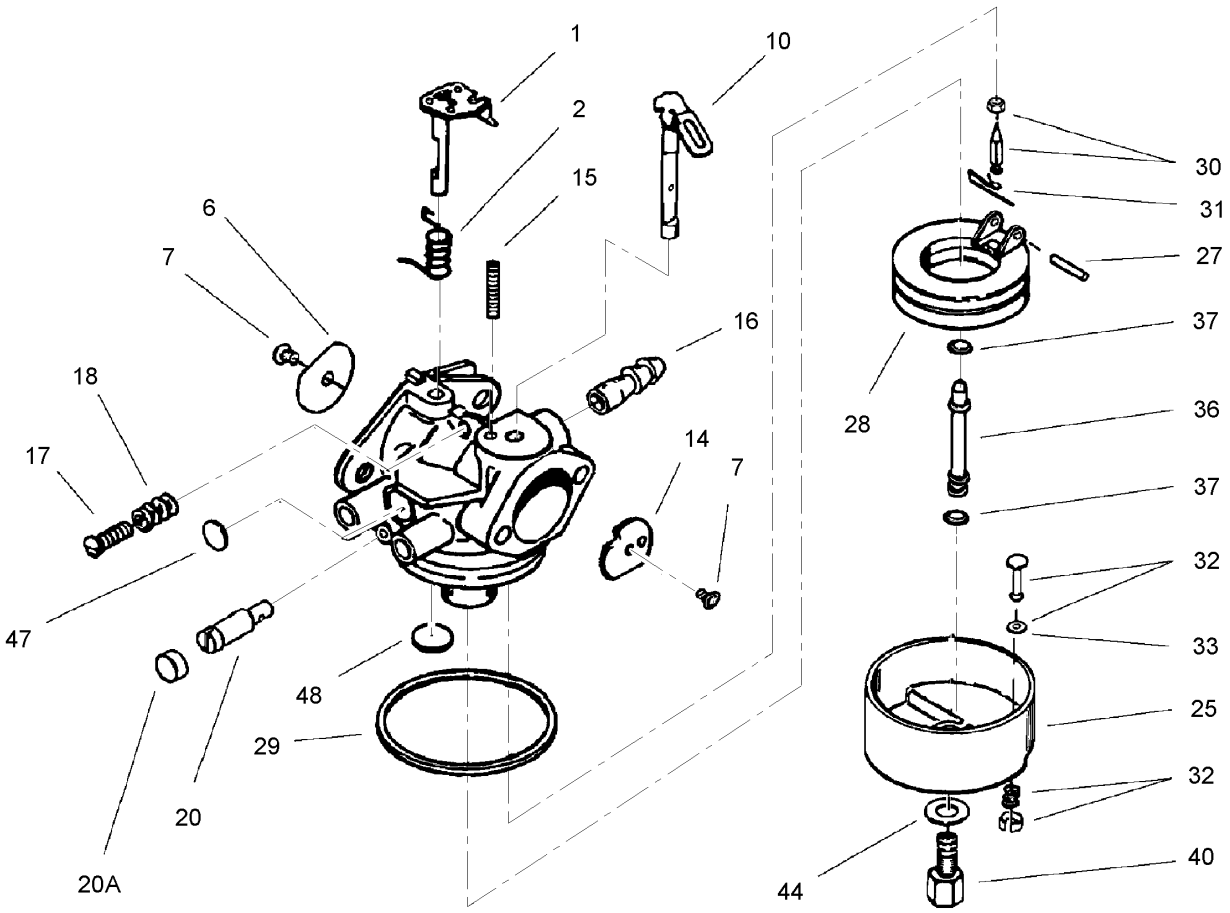

Carburetor Assembly No. 640052
Tecumseh HMSK-80 155724X

Ref	Part No.	Qty.	Description
❸1	631776A	1	Throttle Shaft And Lever ASM
❸2	631970	1	Spring-Return, Throttle
❸6	631778	1	Shutter-Throttle
❸7	650506	2	Screw-Shutter
❸10	632112	1	Choke Shaft And Lever ASM
❸14	632174	1	Shutter-Choke
❸15	630735	1	Spring-Positioning, Choke
❸16	632164	1	Fitting-Fuel
❸17	650417	1	Throttle Crack Screw/idle Speed Screw
❸18	630766	1	Spring-Tension
❸20	640016	1	Screw-Restrictor, Idle
❸20A	640053	1	Cap-Idle Restrictor Screw
❸25	631951	1	Float Bowl ASM (Incl. Ref. # 32 And 33)
❸27	631024	1	Shaft-Float
❸28	632019	1	Float
❸29	631028	1	O-Ring, Float Bowl
❸30	631021	1	Inlet Needle, Seat And Clip (Incl. Ref. # 31)
❸31	631022	1	Clip-Spring
❸32	27136A	1	Bowl Drain ASM
❸33	27554	1	Gasket-Drain Plunger
❸36	640005	1	Tube-Nozzle, Main
❸37	632547	2	O-Ring (Main Nozzle Tube)

Ref	Part No.	Qty.	Description
❸40	640055	1	Nut-High Speed, Bowl
❸44	27110	1	Gasket
❸47	630748	1	Plug-Welch, Idle Mixture Well
❸48	631027	1	Plug-Welch, Atmospheric Vent

Engine Assembly No. 1
Tecumseh HMSK-80 155724X

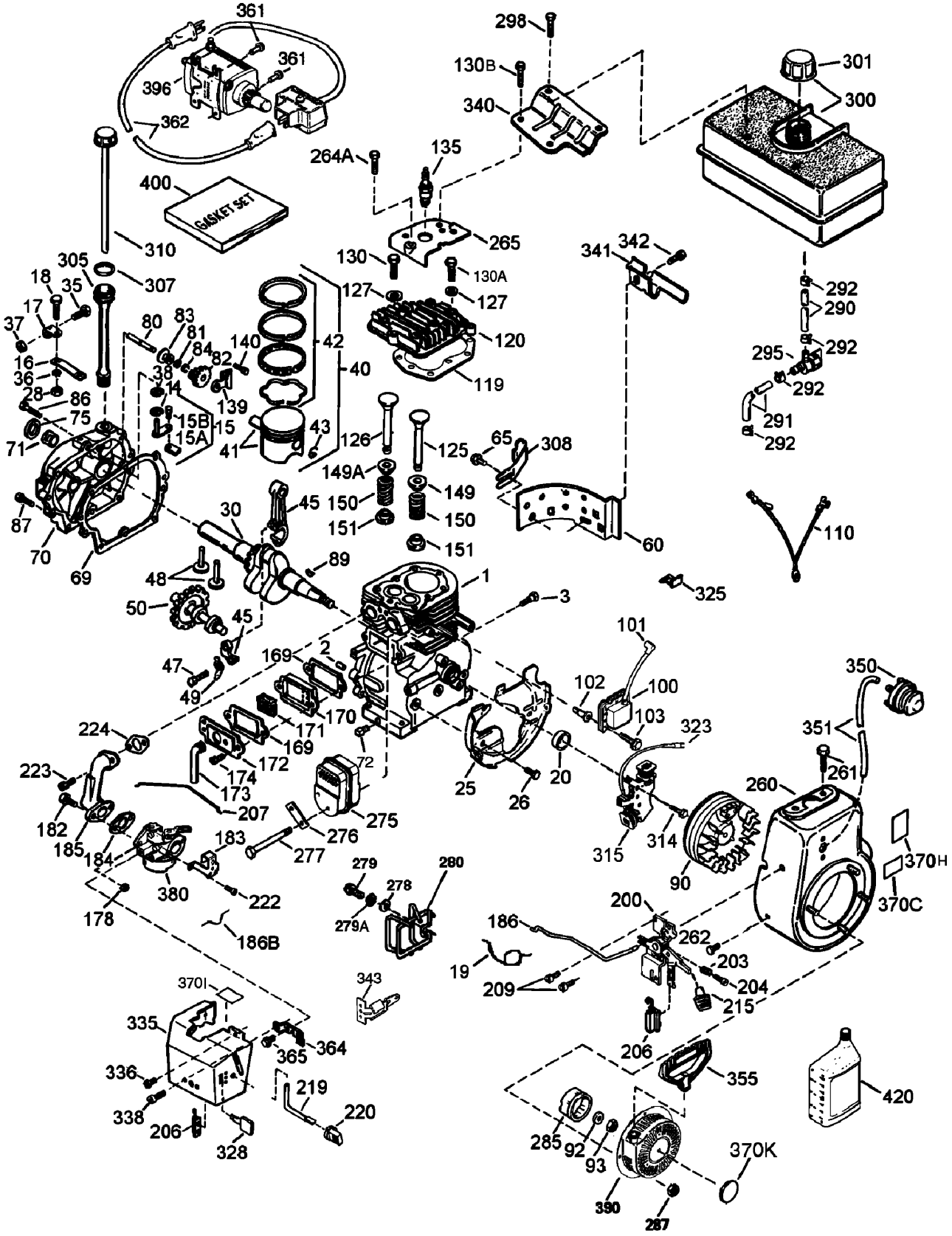

Engine Assembly No. 1
Tecumseh HMSK-80 155724X

Ref	Part No.	Qty.	Description
❸1	35385	1	Cylinder ASM (Incl. Ref. # 2, 20 And 72)
❸2	27652	2	Pin-Dowel
❸3	650820	2	Screw, 1/4-20 X 1/2in
❸14	28277	1	Washer
❸15	30699C	1	Rod-Governor (Incl. Ref. # 15a And 15b)
❸15A	30700	1	Yoke-Governor
❸15B	650494	1	Screw, 6-40 X 5/16in
❸16	33454A	1	Lever-Governor
❸17	29916	1	Clamp-Lever, Governor
❸18	651028	1	Screw, Torx T-15, 8-32 X 3/8in
❸19	34663	1	Spring- Control, Speed
❸20	35319	1	Seal-Oil
❸25	36460	1	Baffle-Housing, Blower
❸26	650561	2	Screw, 1/4-20 X 5/8in
❸28	30322	1	Lock Nut, 8-32
❸30	35571A	1	Shaft-Crank
❸35	29826	1	Screw, 10-32 X 3/4in
❸36	29918	1	Washer-Lock
❸37	29216	1	Lock Nut, 10-32
❸38	29642	1	Ring-Retaining
❸40	40011	1	Piston, Pin And Ring Set (Std.)
❸40	40012	1	Piston, Pin And Ring Set (.010" Os)
❸41	40009	1	Piston And Pin ASM (Std.) (Incl. Ref. #43)
❸41	40010	1	Piston And Pin ASM (.010" Os) (Incl. Ref. #43)
❸42	40013	1	Ring Set (Std.)
❸42	40014	1	Ring Set (.010 Os)
❸43	27888	2	Ring-Retaining, Piston Pin
❸45	36897	1	Connecting Rod Asm. (Incl. Ref. # 47 And 49)
❸47	651033	2	Bolt-Connecting Rod
❸48	34034	2	Lifter-Valve
❸49	36896	1	Dipper-Oil
❸50	35375	1	Camshaft
❸60	33273A	1	Extension-Housing, Blower
❸65	650128	1	Screw, 10-24 X 1/2in
❸69	37342	1	Gasket-Cylinder Cover
❸70	35376A	1	Cylinder Cover (Incl. Ref. # 71, 75, 80-84)
❸71	35377	1	Bushing-Crankshaft
❸72	27642	1	Plug-Drain, Oil
❸75	35319	1	Seal-Oil
❸80	37587	1	Shaft-Governor
❸81	651080	1	Washer
❸82	37588	1	Governor Gear ASM (Incl. Ref. # 81)
❸83	30588A	1	Spool-Governor
❸84	29193	1	Ring-Retaining
❸86	650833	7	Screw, 1/4-20 X 1-3/16in
❸87	650832	1	Screw, 1/4-20 X 1-11/16in

Ref	Part No.	Qty.	Description
❸89	32589	1	Key-Flywheel
❸90	611093	1	Flywheel (W/ring Gear)
❸92	650880	1	Washer-Lock
❸93	650881	1	Nut-Flywheel
❸100	35135A	1	Solid State Ignition (Incl. Ref. # 101)
❸101	610118	1	Cover-Spark Plug
❸102	651024	2	Solid State Mounting Stud
❸103	651007	2	Screw
❸110	35187	1	Wire-Ground
❶❸110A	37047	1	Wire-Ground
❸119	36448	1	Gasket-Head, Cylinder
❸120	36449	1	Head-Cylinder
❸125	27878A	1	Exhaust Valve (Std.) (Incl. Ref. # 151)
❸125	27880A	1	Exhaust Valve (1/32" Os) (Incl. Ref. #151)
❸126	34035	1	Intake Valve (Std.) (Incl. Ref. # 151)
❸127	650691	2	Washer
❸130	6021A	7	Screw (5/16–18 X 1–7/16in)
❸130A	650727	2	Screw, 5/16-18 X 1-25/32in
❸130B	651055	2	Screw, 5/16-18 X 39/64in
❸135	35395	1	Spark Plug-Resistor
❸139	33369	1	Bracket-Gear, Governor
❸140	650836	2	Screw, 10-24 X 1/2in
❸149	27882	1	Cap-Spring, Valve
❸149A	35862	1	Cap-Spring, Valve
❸150	27881	2	Spring-Valve
❸151	32581	2	Keeper-Spring, Valve
❸❹169	27896A	2	Gasket-Valve Cover
❸170	28423	1	Body-Breather
❸171	28424	1	Element-Breather
❸172	28425	1	Cover-Valve
❸173	35350	1	Tube-Breather
❸174	650128	2	Screw, 10-24 X 1/2in
❸178	29752	2	Nut And Lock Washer ASM
❸182	30088A	2	Screw, 1/4-28 X 1in
❸183	34587A	1	Bracket-Choke
❸❹184	33263	1	Gasket-Carburetor To Intake Pipe
❸185	33877	1	Pipe-Intake
❸186	34667	1	Link-Governor
❸186B	36652	1	Spring-Choke
❸200	34677	1	Control Bracket (Incl. Ref. # 19, 203, 204 And 206)

Engine Assembly No. 2
Tecumseh HMSK-80 155724X

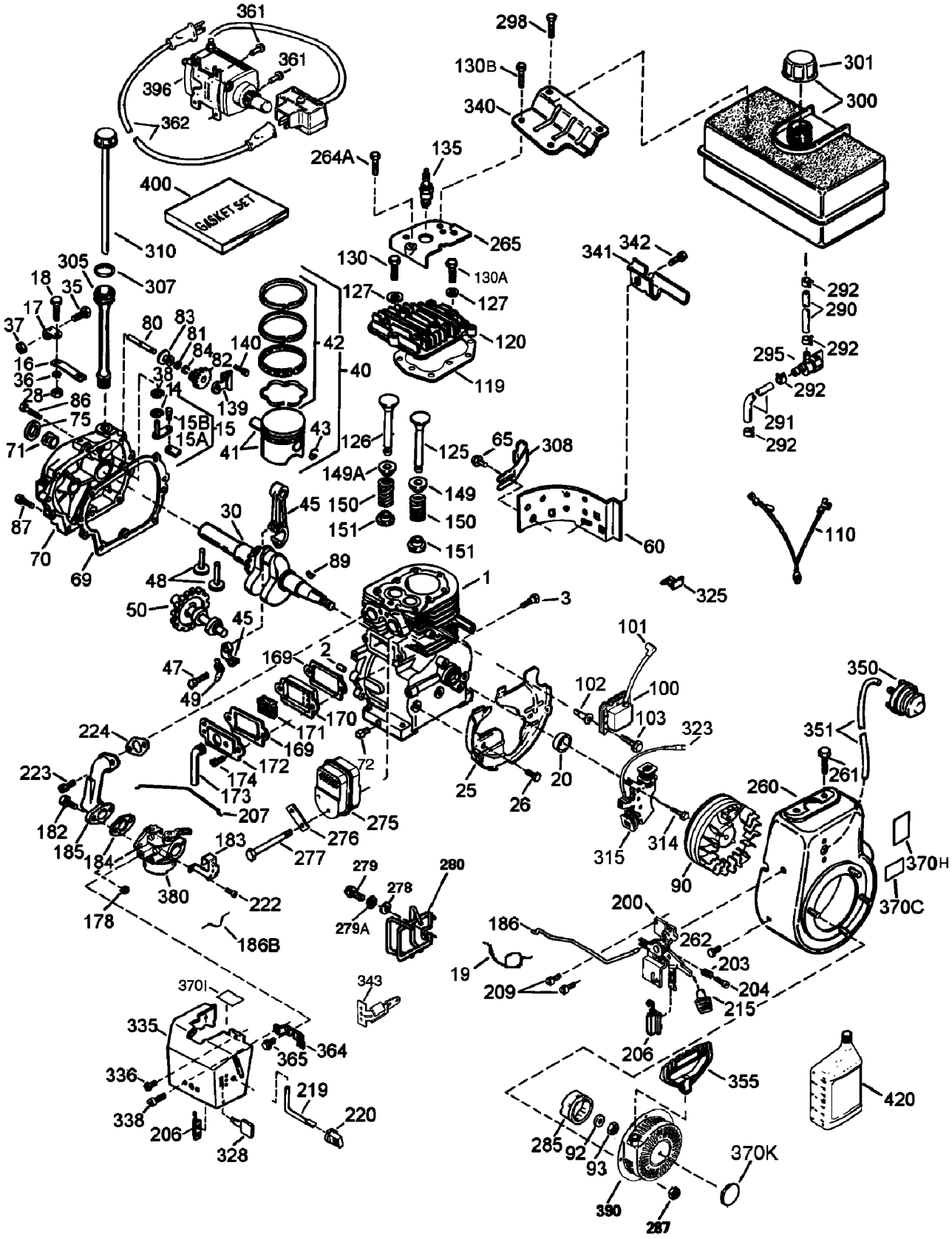

Engine Assembly No. 2
Tecumseh HMSK-80 155724X

Ref	Part No.	Qty.	Description
❸203	31342	1	Spring-Compression
❸204	651029	1	Screw, 5-40 X 7/16in
❸206	610973	1	Terminal
❸207	33878	1	Link-Throttle
❸209	650821	2	Screw, 10-32 X 1/2in
❸215	35440	1	Knob-Control
❸219	34586	1	Rod-Choke
❸220	35438	1	Knob-Choke
❸222	28820	2	Screw, 10-32 X 1/2in
❸223	650378	2	Screw, Torx T-30, 5/16-18 X 1-1/8in
❸224	27915A	1	Gasket-Pipe, Intake
❸260	35447A	1	Housing-Blower
❸261	650788	2	Screw, 5/16-18 X 3/4in
❸262	29747B	2	Screw
❸264A	650802	1	Screw, 1/4-20 X 5/8in
❸265	33272D	1	Cover-Head, Cylinder
❸275	35056	1	Muffler
❸276	31588	1	Plate-Locking
❸277	651002	2	Screw, 5/16-18 X 4-3/16in
❸278	650147	2	Washer-Flat
❸279	650980	2	Screw, 10-16 X 47/64
❸279A	650979	2	Washer-Lock
❸280	36294	1	Muffler Heat Shield ASM
❸285	35985B	1	Cup-Starter
❸287	29752	4	Nut And Lock Washer ASM
❸290	29774	1	Line-Fuel
❸291	30962	1	Line-Fuel
❸292	26460	4	Clamp-Line, Fuel
❸295	35857	1	Fuel Shut-Off Valve ASM (Incl. Ref. # 292)
❸298	650665	2	Screw, 1/4-15 X 3/4in
❸300	34156A	1	Fuel Tank (Incl. Ref. # 292 And 301)
❸301	36246	1	Cap-Fuel
❸305	35554	1	Tube-Fill, Oil
❸307	35499	1	O–ring
❸308	35540	1	Clip-Tube, Fill
❸310	36205	1	Gage Oil Assembly
❸314	650873	1	Screw, 1/4-20 X 3/4in
❸315	611111	1	Alternator Coil ASM (18 Watt)(Incl. Ref. #322)
❸323	611118	1	Terminal
❸325	29443	1	Clip-Wire
❸328	35062	2	Key-Ignition
❶❸329	610973	1	Terminal
❸335	36547	1	Cover-Carburetor
❸336	650765	1	Screw, 10-32 X 1/2in
❸338	28942	2	Screw, 10-32 X 3/8in
❸340	34154	1	Bracket-Tank, Fuel
❸341	34155	1	Bracket-Tank, Fuel
❸342	650561	1	Screw, 1/4-20 X 5/8in

Ref	Part No.	Qty.	Description
❸343	35079A	1	Key Switch Bracket (Incl. Ref. #343a)
❶❸343A	651060	1	Screw, 10-32 X 23/64in
❸350	570682A	1	Primer ASM
❸351	32180C	1	Line-Primer
❸355	590574	1	Handle-Mitten Grip (Not Included With Starter)
❸361	650990	2	Screw, T-30, 1/4-20 X 15/32in
❸364	33377	1	Bracket-Carburetor
❸365	650767	2	Screw, 8-32 X 27/64in
❸370C	36501	1	Decal-Primer
❸370H	35077	1	Decal-Instruction
❸370I	37119	1	Decal-Warning
❸370K	36695	1	Decal-Starter
❶❸371D	36534	1	Decal-Caution
❸380	640052	1	Carburetor (Incl. Ref. #184)
❸390	590749	1	Rewind Starter
❸396	37102	1	Electric Motor ASM (220 Volt)
❸400	36450C	1	Gasket Set
❸420	730226A	1	Oil, Sae 5w30 (Quart)

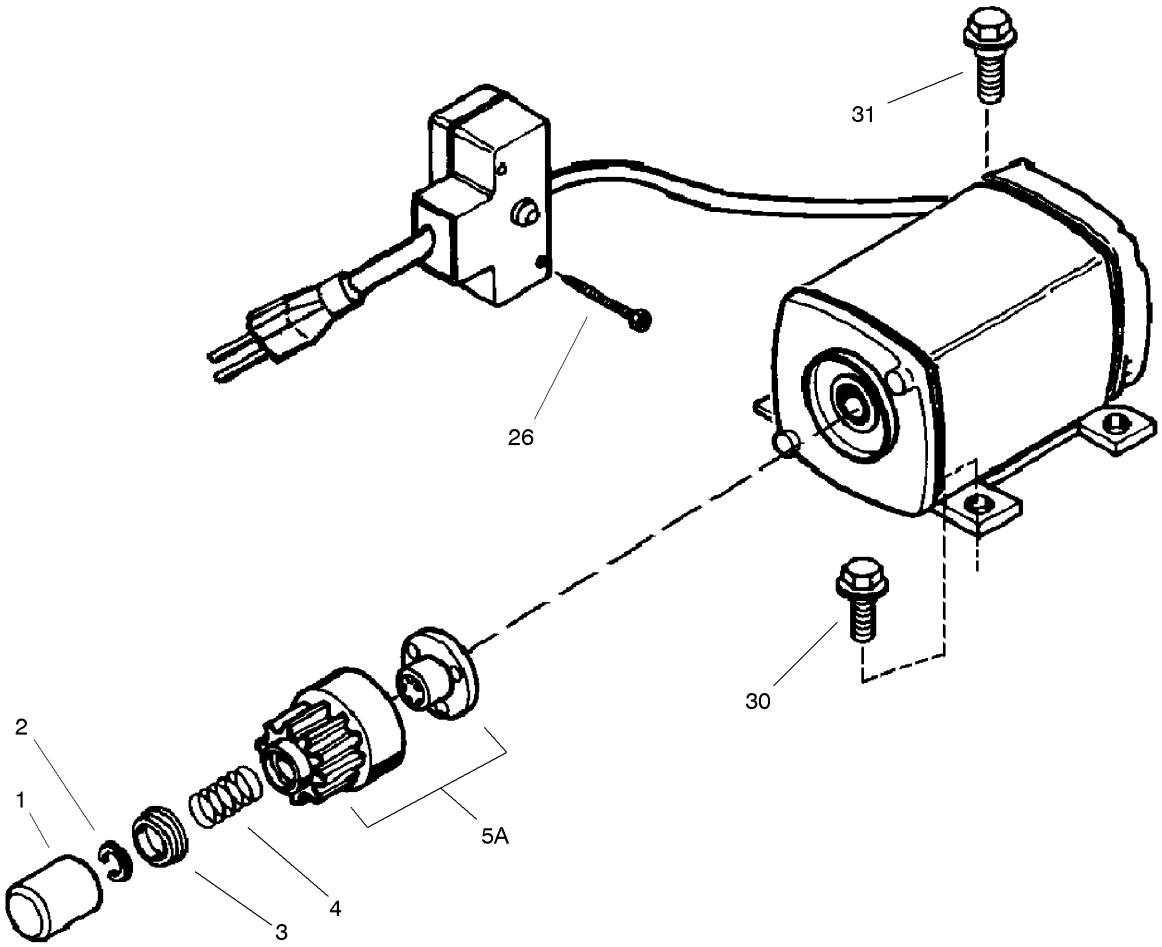

220 Volt Electric Starter Assembly No. 37102
Tecumseh HMSK-80 155724X

Ref	Part No.	Qty.	Description
❸1	33451	1	Cover-Dust
❸2	33842	1	Ring-Retainer
❸3	33430	1	Retainer-Spring
❸4	33431	1	Spring-Anti-Drift
❸5A	37050	1	Gear And Nut (Incl. Ref. # 2)
❸26	650819	2	Screw, 6-32 X 2-1/2in
❸26	651032	2	Screw, 12-16 X 5/8in
❸30	30063	2	Screw, Torx T-30, 1/4-20 X 1/2in
❸31	650820	2	Screw, 1/4-20 X 1/2in

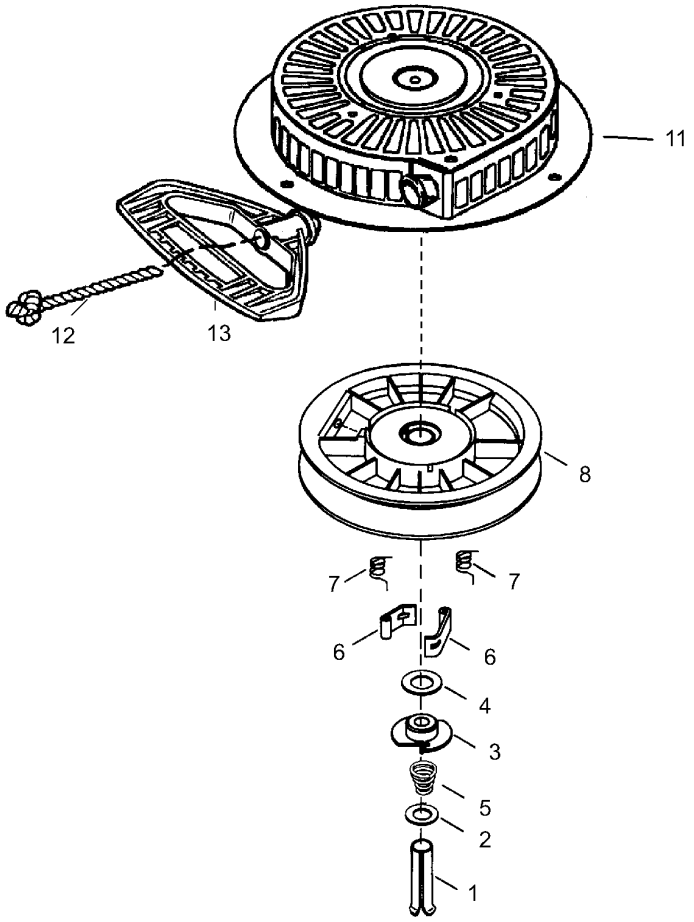

Rewind Starter Assembly No. 590749
Tecumseh HMSK-80 155724X

Ref	Part No.	Qty.	Description
❸1	590599A	1	Spring Pin ASM
❸2	590600	1	Washer
❸3	590679	1	Retainer
❸4	590601	1	Washer
❸5	590678	1	Spring-Brake
❸6	590680	2	Dog-Starter
❸7	590412	2	Spring-Dog
❸8	590682	1	Pulley And Rewind Spring ASM
❸11	590750A	1	Starter Housing ASM
❸12	590535	1	Rope-Starter (98in X 9/64in Diameter)
❸13	590574	1	Handle-Mitten Grip (Not Included With Starter)

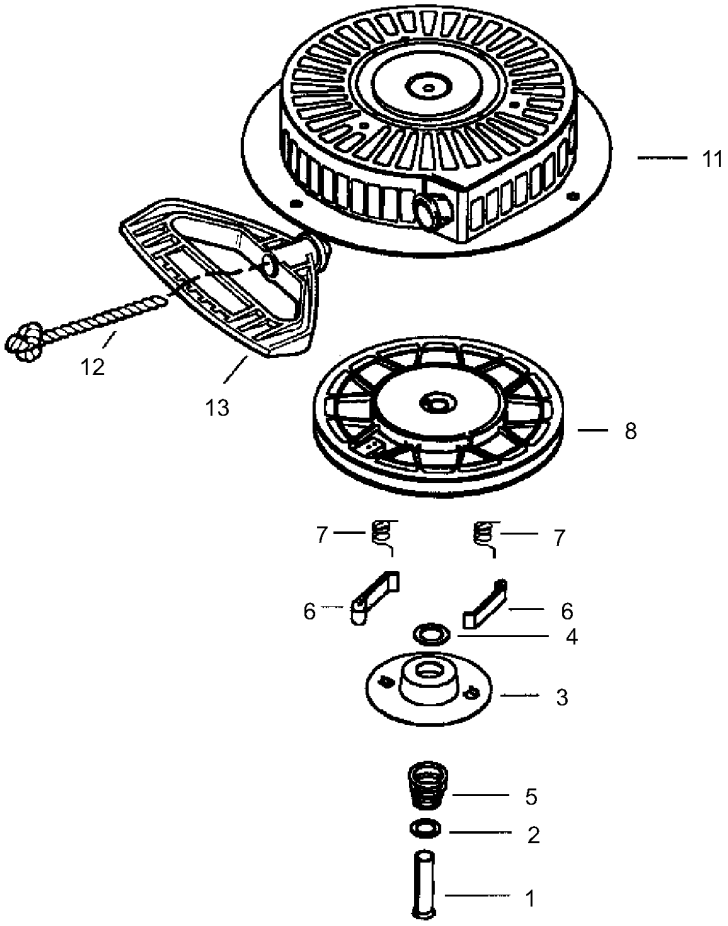

Rewind Starter Assembly No. 590733 (Optional)
Tecumseh HMSK-80 155724X

Ref	Part No.	Qty.	Description
❸1	590599A	1	Pin-Spring (Incl. Ref # 4)
❸2	590600	1	Washer
❸3	590696	1	Retainer
❸4	590601	1	Washer
❸5	590697	1	Spring-Brake
❸6	590698	2	Dog-Starter
❸7	590699	2	Spring-Dog
❸8	590709	1	Pulley And Rewind Spring ASM
❸11	590734A	1	Starter Housing ASM
❸12	590535	1	Rope-Starter (98in X 9/64in Diameter)
❸13	590574	1	Handle-Mitten Grip (Not Included With Starter)

NOTES

NOTES

NOTES


TORO®