FORM NO. 3313-979

TORO

MODEL NO. 38545-8000001 & UP

PARTS CATALOG

828 SNOWTHROWER

ONLY COPY
DO NOT REMOVE
Tech. Publications

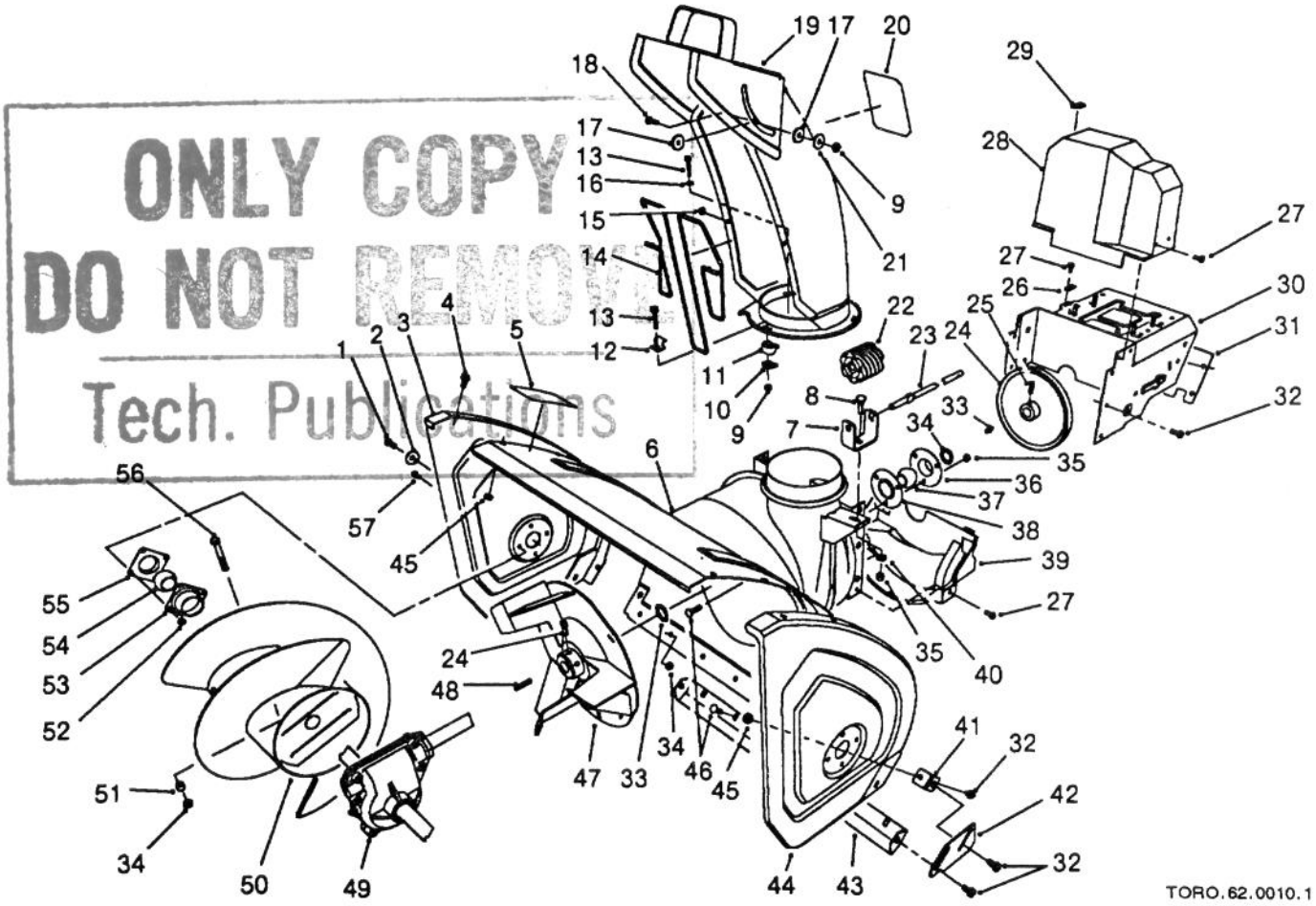

HOUSING & CHUTE ASSEMBLY

Ref. No.	Part No.	Description	No. Used
1	323-6	Screw - Cap Hex Hd.	2
2	3-0750	Washer - Retaining	2
3	62-0600	Plate - Side R.H.	1
4	3234-28	Screw - Hex Flange Hd.	10
5	53-7670	Decal - Danger Auger	1
6	62-0721	Housing - 28"	1
7	63-2180	Bracket - Gear	1
8	3230-2	Bolt - Carriage	1
9	3296-2	Nut - Lock	4
10	63-2670	Plate - Chute Retainer	3
11	62-1430	Retainer - Chute	3
12	63-3130	Bracket - Chute Guard	1
13	3274-13	Screw - Machine	3
14	63-3020	Guard - Chute	1
15	3290-326	Nut - Push	2

Ref. No.	Part No.	Description	No. Used
16	3256-14	Washer - Flat	1
17	63-2900	Washer - Plastic	2
18	32122-32	Screw	1
19	62-0840	Chute Assembly	1
20	53-7660	Decal - Danger Chute	1
21	3256-61	Washer - Flat	1
22	62-0820	Gear - Worm	1
23	62-1720	Rod - Chute Gear	1
24	62-1300	Pulley - Impeller	1
25	3242-4	Screw - Set Sq. Hd.	4
26	63-2300	Retainer - Cable	1
27	32144-4	Screw - Hex Flange Hd.	7
28	63-2080	Cover - Belt (Upper)	1
29	63-3290	Cover - Cable	1
30	62-0742	Frame - Engine	1

© The TORO Company - 1987

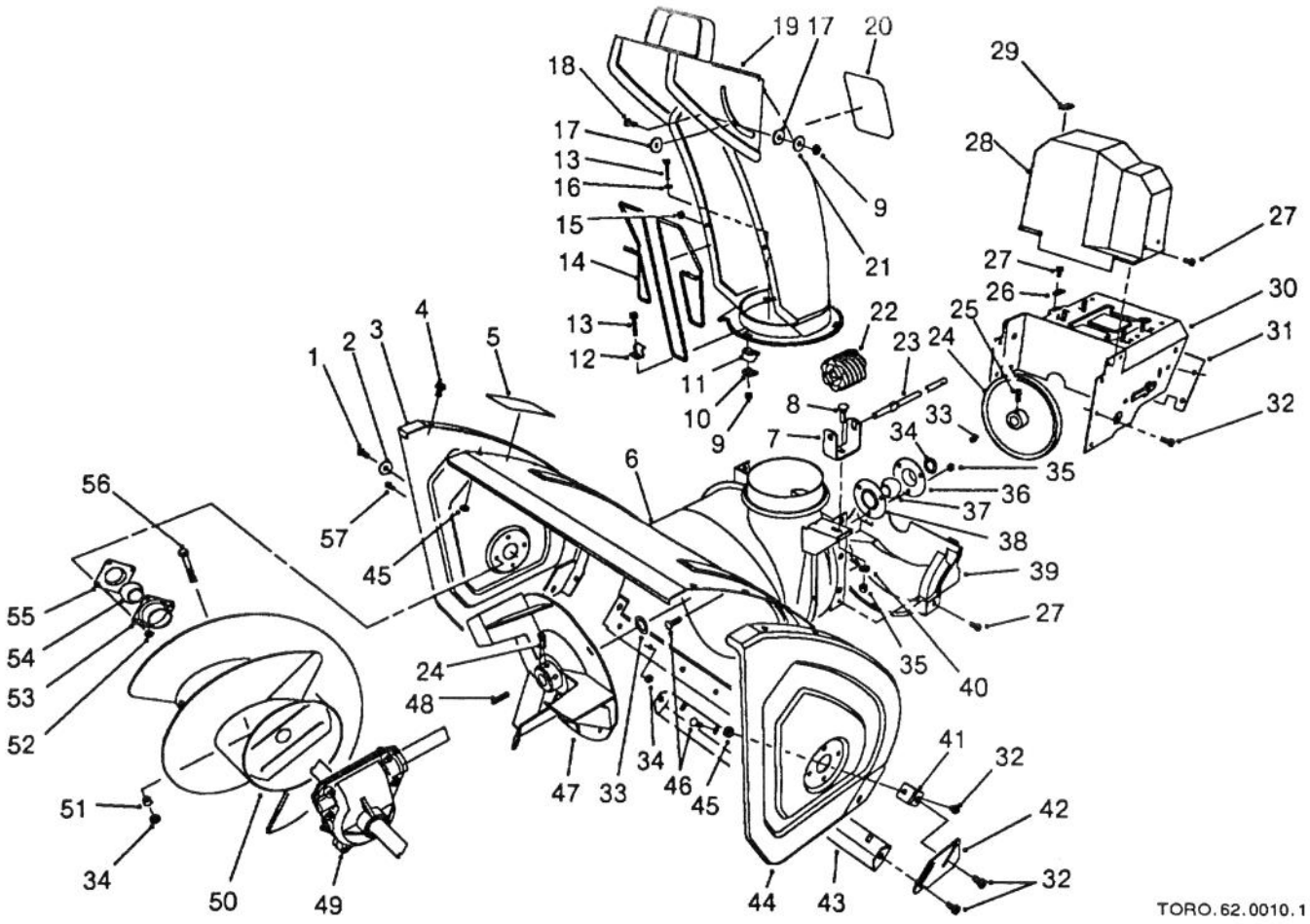

HOUSING & CHUTE ASSEMBLY (Continued)

Ref. No.	Part No.	Description	No. Used
31	62-1440	Cover - Engine Frame	1
32	3234-7	Screw - Hex. Washer Hd.	12
33	3257-23	Key - Woodruff	1
34	252-80	Washer - Thrust	2
35	3296-29	Nut - Lock	12
36	26-6120	Flange - Bearing (Rear)	1
37	63-3450	Bearing - Impeller	1
38	26-6110	Flange - Bearing (Front)	1
39	62-1400	Cover - Belt (Lower)	1
40	3256-23	Washer - Flat	1
41	62-1240	Bracket - Skid	2
42	62-0980	Plate - Skid L.H.	1
*	62-0990	Plate - Skid R.H.	1
43	62-0680	Blade - Scraper	1
44	62-0590	Plate - Side L.H.	1

Ref. No.	Part No.	Description	No. Used
45	3296-47	Nut - Lock	12
46	3230-23	Screw - Carriage	9
47	63-2590	Impeller	1
48	6-8590	Key - Impeller	1
49	62-0441	Auger Gearbox Assembly	1
50	63-2751	Auger - R.H.	1
*	63-2761	Auger - L.H.	1
51	25-5090	Spacer - Auger Hub	2
52	32152-4	Nut - Lock	8
53	20-0990	Flange - Bearing (Inner)	2
54	20-0980	Bearing - Auger	2
55	20-1000	Flange - Bearing (Outer)	2
56	17-7030	Bolt - Auger	2
57	321-3	Screw - Cap Hex Hd.	8

*Not Illustrated

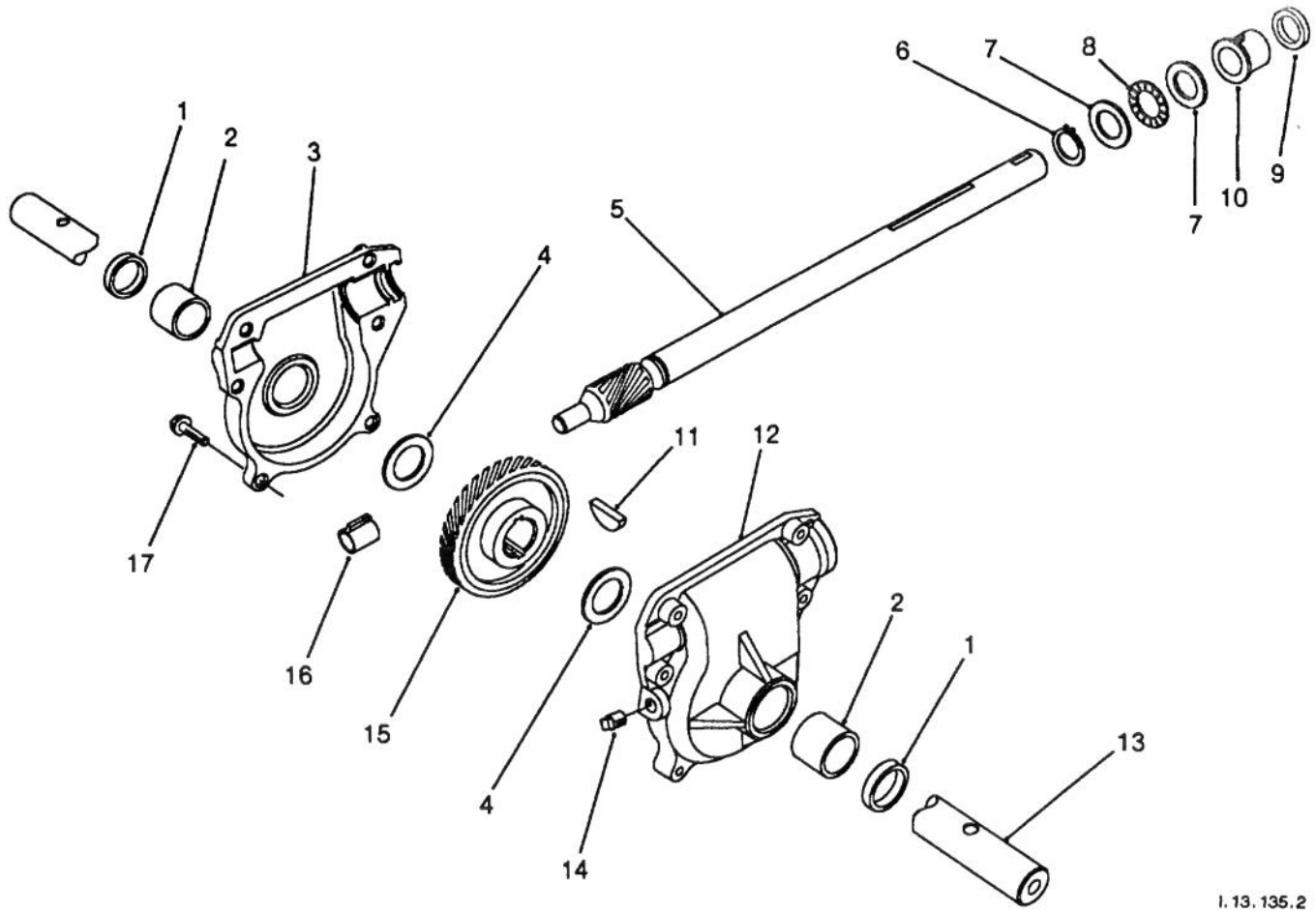

28" AUGER GEARCASE ASSEMBLY NO. 62-0441

Ref. No.	Part No.	Description	No. Used
1	7-0045	Seal - Oil	2
2	256-237	Bushing - Sleeve	2
3	62-0570	Gearcase Assembly - R.H. (Incl. Ref. # 1-2)	2
4	252-71	Bearing - Thrust	2
5	62-1420	Shaft - Impeller	1
6	32151-33	Ring - Snap	1
7	252-78	Washer - Thrust	2
8	252-76	Bearing - Thrust	1
9	253-149	Seal - Input	1

Ref. No.	Part No.	Description	No. Used
10	37-6560	Bushing - Input	1
11	3257-10	Key - Woodruff	1
12	62-0580	Gearcase Assembly - L.H. (Incl. Ref. # 1-2)	1
13	62-1531	Shaft - Auger (28")	1
14	281-1	Plug - Pipe Sq. Hd.	1
15	62-0120	Gear - Helical	1
16	62-1150	Bushing - Worm	1
17	32144-22	Screw - Hex Washer Hd.	6

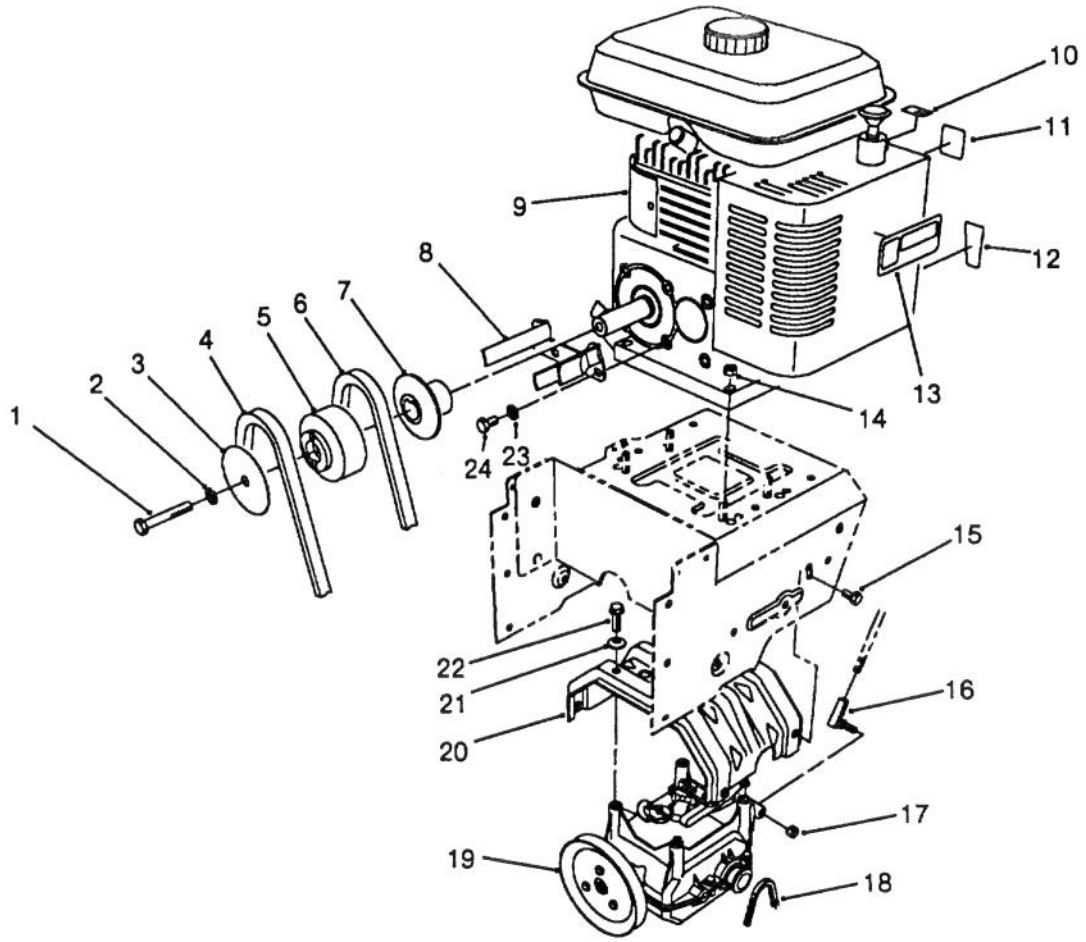

TORO.62.0010.3

ENGINE ASSEMBLY

Ref. No.	Part No.	Description	No. Used
1	3211-9	Screw - Cap Hex. Hd.	1
2	3253-21	Washer - Lock	1
3	62-0910	Sheave Half - Impeller	1
4	63-2963	Belt - Impeller	1
5	62-0900	Hub - Sheave	1
6	63-2952	Belt - Traction	1
7	62-0890	Sheave Half - Traction	1
8	63-2980	Guide - Belt	1
9	63-3010	Engine - 8 hp.	1
10	63-3490	Decal - Choke	1
11	63-2470	Decal - Primer	1
12	63-3190	Decal - Throttle	1

Ref. No.	Part No.	Description	No. Used
13	63-2310	Decal - Hot Surface	1
14	32128-20	Nut - Lock	4
15	3234-7	Screw - Hex Flange Hd.	4
16	63-2640	Joint- Ball	1
17	3296-6	Nut - Lock	1
18	63-2930	Chain - Drive	1
19	62-0190	Transmission Assembly	1
20	63-2990	Frame - Transmission	1
21	3290-461	Washer - Belleville	4
22	11-0590	Screw - Cap Hex Hd.	4
23	3253-4	Washer - Lock	2
24	3210-1	Screw - Cap Hex Hd.	2

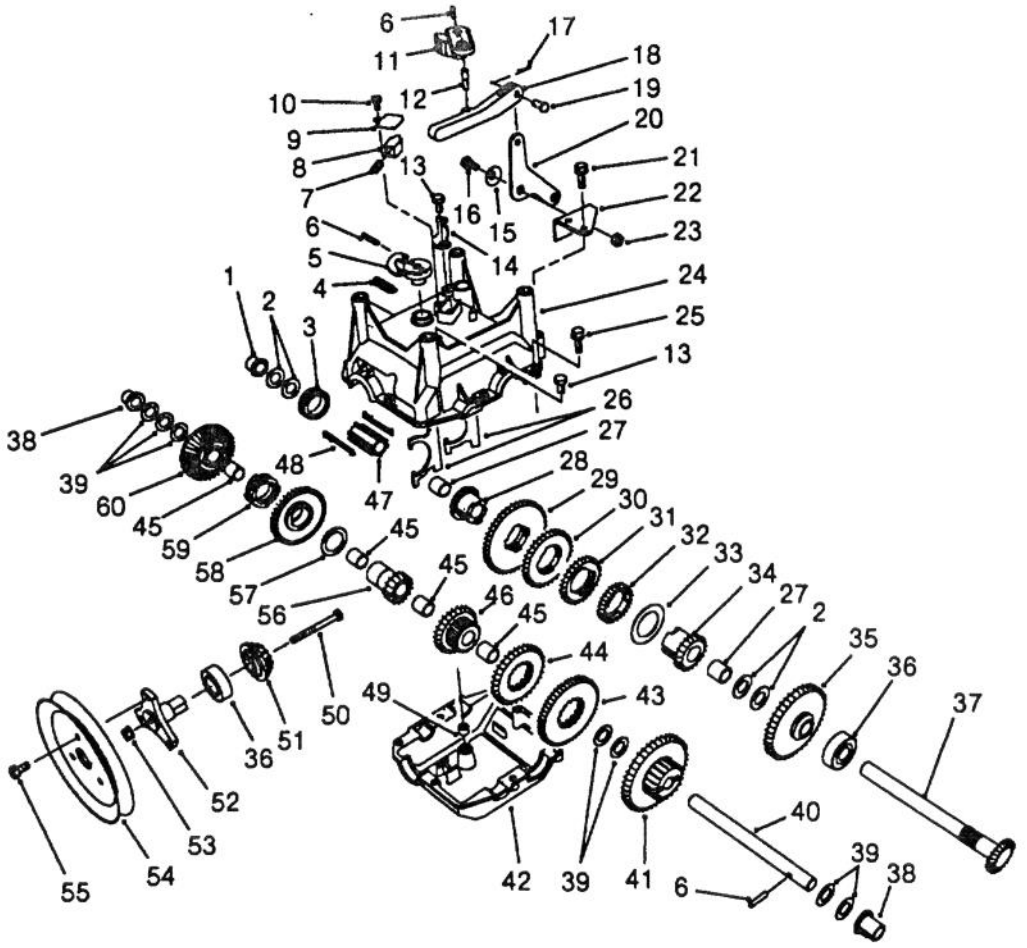

I.13.135.7

TRANSMISSION ASSEMBLY NO. 62-0190

Ref. No.	Part No.	Description	No. Used
1	62-1180	Bushing - Output (Flange)	1
2	252-59	Washer - Thrust	4
3	62-0430	Collar - Shift (Speed)	1
4	63-2920	Spring - Extension (F/R Return)	1
5	62-0880	Lever - Direction Shift	1
6	32121-106	Pin - Coil	3
7	63-2890	Spring - Compression (Detent)	1
8	62-1020	Button - Detent	1
9	62-1690	Cover - Detent	1
10	32104-71	Screw - Pan Hd.	1
11	62-0870	Lever - Gear Shift	1
12	63-2190	Pin - Gearshift Link	1
13	32144-4	Screw - Self Tapping	2
14	62-1740	Bracket - Cable	1
15	3290-477	Washer - Curved	1
16	63-3410	Bolt - Shoulder	1
17	3272-1	Pin - Cotter	1
18	62-0860	Link - Gearshift	1
19	283-3	Pin - Clevis	1
20	63-2600	Bellcrank	1
21	32104-95	Screw - Hex Washer Hd.	2

Ref. No.	Part No.	Description	No. Used
22	62-1190	Bracket - Bellcrank	1
23	3296-42	Nut - Lock	1
24	62-0490	Gear Case - Upper	1
25	32144-22	Screw - Hex Washer Hd.	6
26	62-1040	Yoke-Shift	2
27	62-1350	Bushing - Output	2
28	62-0320	Sleeve	1
29	62-0240	Gear - 45T	1
30	62-0220	Gear - 34T	1
31	62-0200	Gear - 27T	1
32	62-0250	Gear - 29T	1
33	63-2280	Washer - Thrust	1
34	62-0340	Sleeve - Gear 19T	1
35	62-0370	Gear - 41T	1
36	38-7820	Bearing - Ball	2
37	62-1080	Shaft - Output	1
38	62-1170	Bushing - Flange	2
39	257-10	Washer - Thrust	7
40	62-0330	Shaft - Imtermediate	1
41	62-0360	Gear - Compound 19T/41T	1
42	62-0480	Gear Case - Lower	1
43	62-0260	Gear - 51T	1
44	62-0210	Gear - 33T	1

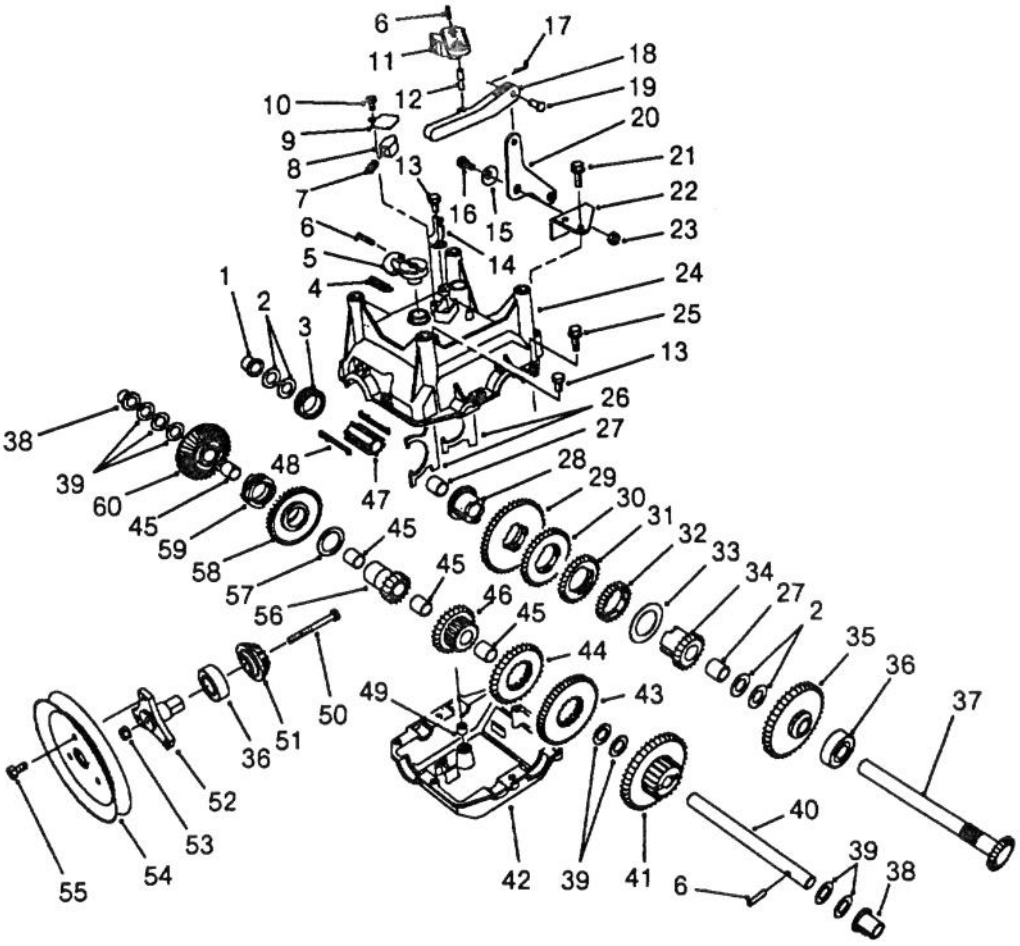

I.13.135.7

TRANSMISSION ASSEMBLY NO. 62-0190 (Continued)

Ref. No.	Part No.	Description	No. Used
45	62-1160	Bushing - Intermediate	4
46	62-0230	Gear - 26T	1
47	62-1030	Sleeve - Shift	1
48	62-0310	Key - Shift	2
49	29-9570	Bushing - Yoke	1
50	321-15	Screw - Cap Hex Hd.	1
51	62-0350	Pinion - Bevel 19T	1
52	62-0380	Hub - Pulley	1

Ref. No.	Part No.	Description	No. Used
53	32128-32	Nut - Flange Lock	1
54	62-1310	Pulley - Traction	1
55	12-3270	Screw	3
56	62-0500	Gear - 15T	1
57	63-2290	Washer - Thrust	1
58	62-0400	Gear - Bevel 36T	1
59	62-0390	Collar - Shift	1
60	62-0410	Gear - Bevel Reverse 36T	1

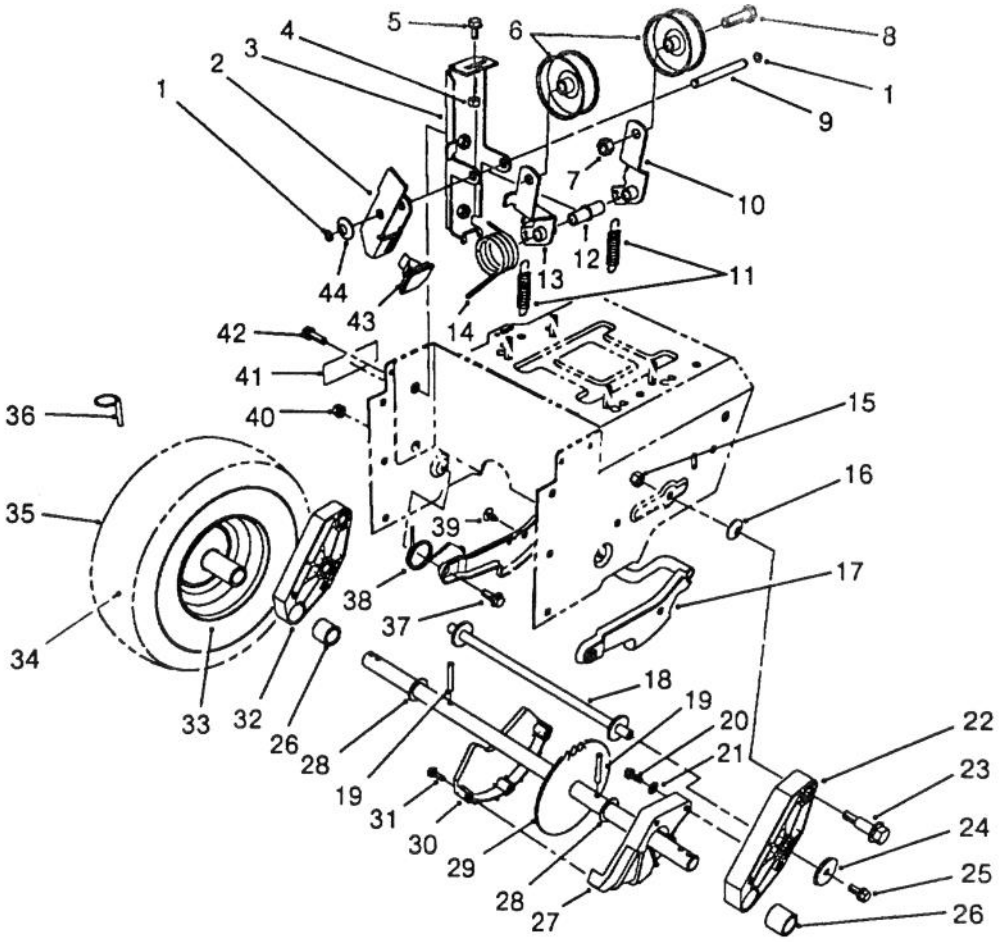

TRACTION DRIVE ASSEMBLY

Ref. No.	Part No.	Description	No. Used
1	32120-46	Ring - Retaining	2
2	63-2820	Arm - Brake	1
3	63-2850	Bracket - Idler Arm	1
4	3296-42	Nut - Lock	1
5	3234-13	Screw - Cap Hex. Hd.	1
6	3-4244	Pulley - Idler	2
7	3296-59	Nut - Lock	2
8	323-7	Screw - Cap Hex Hd.	2
9	62-0970	Pin - Idler	1
10	62-1260	Arm - Traction Idler	1
11	63-2870	Spring - Extension	2
12	62-1210	Bushing - Idler	1
13	62-1280	Arm - Impeller Idler	1
14	63-2881	Spring - Torsion	1
15	3296-39	Nut - Lock	2
16	3290-461	Washer - Belleville	2
17	62-0470	Latch - Arm	1
18	63-3440	Tube - Pivot	1
19	32121-9	Pin - Roll	2
20	32144-4	Screw - Hex Flange Hd.	2
21	3256-1	Washer - Flat	2
22	62-0150	Pivot Arm Assembly L.H. (Incl. Ref. # 26)	1
23	62-1330	Bolt - Shoulder	2

Ref. No.	Part No.	Description	No. Used
24	63-3360	Washer	2
25	32144-41	Screw - Cap Hex. Hd.	2
26	63-2250	Bushing - Axle	2
27	62-1010	Guard - Chain L.H.	1
28	252-80	Washer - Thrust	2
29	63-2112	Axle Assembly	1
30	62-1000	Guard - Chain R.H.	1
31	32104-118	Screw - Hex Flange Hd.	3
32	63-3150	Pivot Arm Assembly R.H. (Incl. Ref. #26)	1
33	241-125	Rim - Wheel	2
34	232-48	Tube - Inner	2
35	231-123	Tire	2
36	3290-243	Pin - Klik	2
37	5-2490	Bolt - Shoulder	2
38	63-2740	Spring - Torsion	1
39	3290-476	Fastener - Panel	1
40	3296-47	Nut - Lock	2
41	63-3470	Decal - Adjustment	1
42	3234-7	Screw - Hex Flange Hd.	2
43	40-8140	Pad - Brake	1
44	3290-477	Washer - Bellville	1
*	62-1090	Wheel & Tire Assembly (Incl. Ref. #33-35)	1

*Not Illustrated

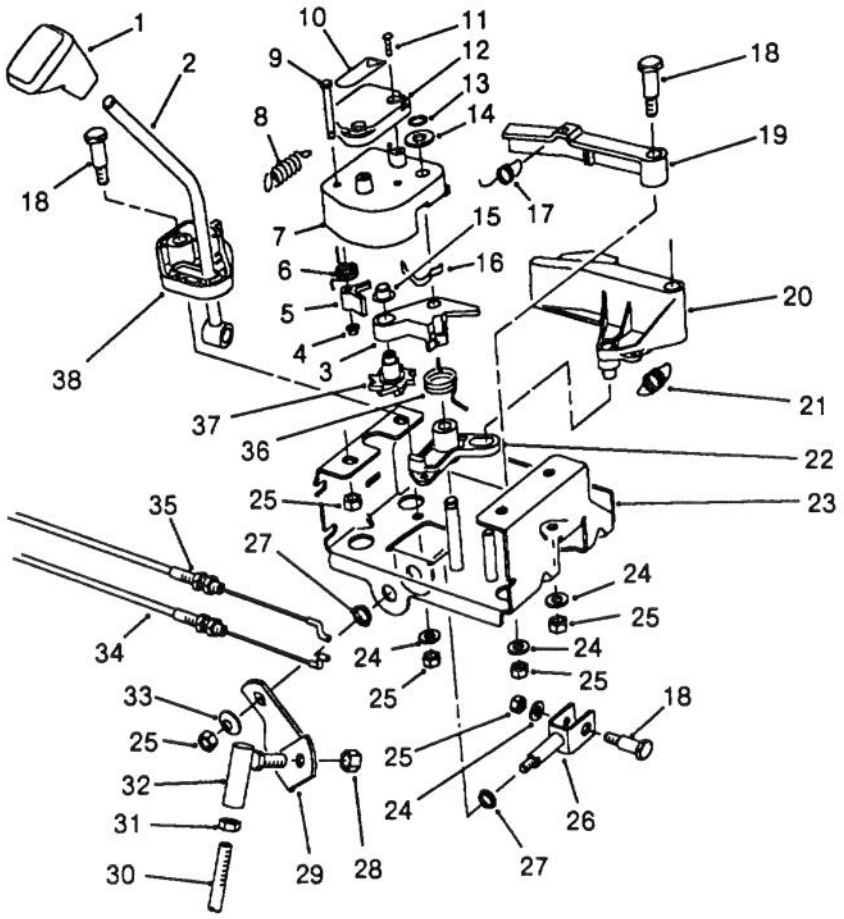

TORO.62.0010.4

TRACTION LINKAGE ASSEMBLY

Ref. No.	Part No.	Description	No. Used
1	62-1290	Knob - Shift	1
2	62-1580	Rod - Shift (Upper)	1
3	62-1110	Lever - Index Wheel	1
4	3290-422	Nut - Push	1
5	62-0180	Tang - Index	1
6	62-1650	Spring - Torsion	1
7	62-1100	Lever - Latch	1
8	63-2220	Spring - Extension (Latch Lever)	1
9	63-2610	Pin - Tang	1
10	63-2480	Decal - #2	1
11	32104-118	Screw - Pan Hd.	2
12	62-1140	Cover - Latch	1
13	32120-46	Ring - Retaining	1
14	257-9	Washer - Thrust	1
15	3290-320	Nut - Push	1
16	62-1710	Spring - Flat	1
17	63-2240	Spring - Extension (Lockout)	1
18	63-2650	Screw - Shoulder	3
19	62-1700	Lever - Lockout	1

Ref. No.	Part No.	Description	No. Used
20	62-1130	Lever - Reverse	1
21	63-2230	Spring - Extension (Reverse Lever)	1
22	62-1120	Lever - Reverse	1
23	63-2150	Frame - Control	1
24	3256-23	Washer - Flat	4
25	3296-29	Nut - Lock	8
26	62-1610	Clevis	1
27	256-296	Bushing - Nyliner	2
28	3296-6	Nut - Lock	1
29	63-2630	Bracket - Shift	1
30	63-2620	Rod - Shift (Lower)	1
31	3220-3	Nut - Jam	2
32	63-2640	Joint - Ball	1
33	3290-456	Washer - Belleville	1
34	63-2210	Cable - Gearbox	1
35	63-2200	Cable - Latch	1
36	63-2270	Spring - Torsion	1
37	62-0170	Wheel - Index	1
38	62-1470	Base - Lockout	1

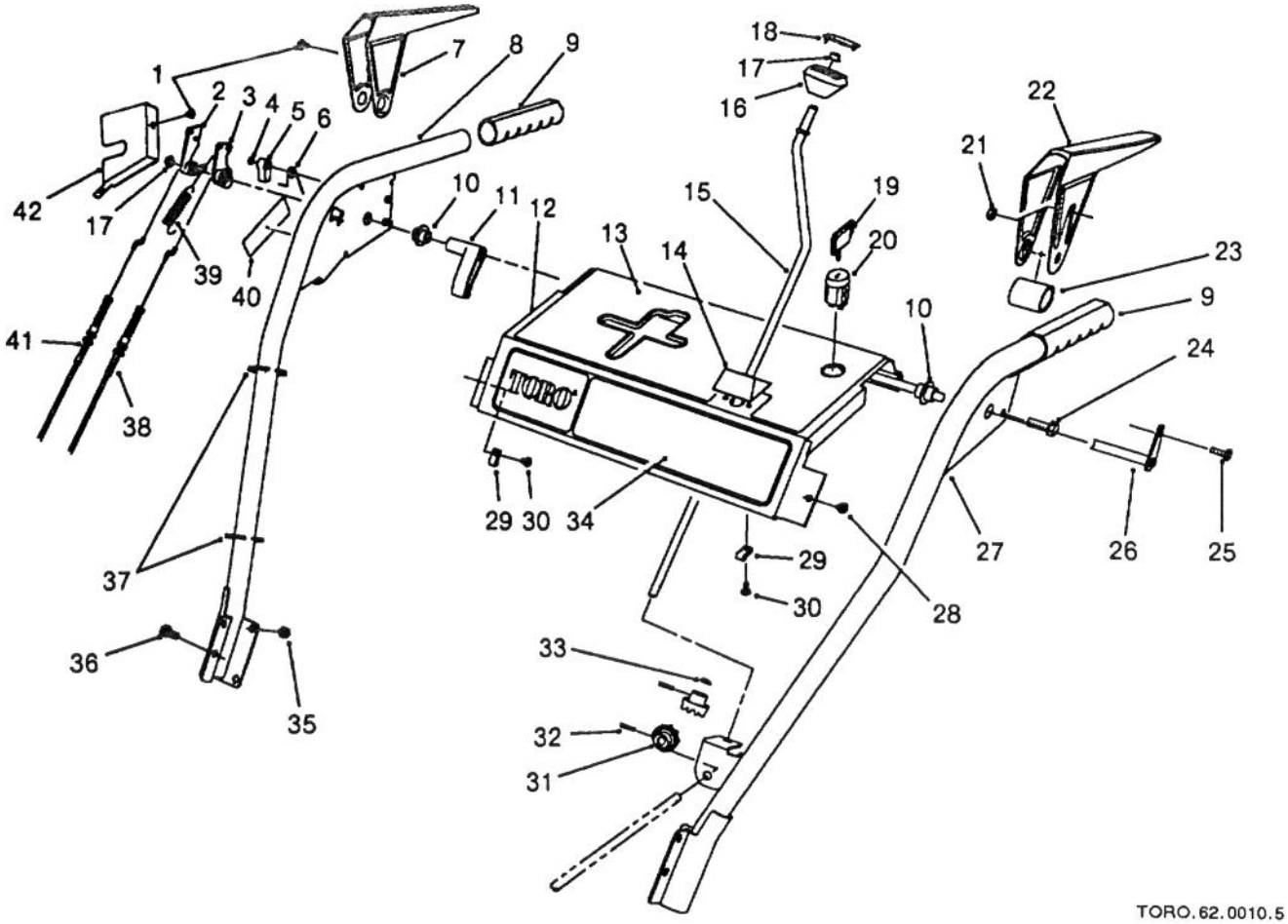

HANDLE ASSEMBLY

Ref. No.	Part No.	Description	No. Used
1	2210-250	Screw	3
2	62-0300	Tang - Locking	1
3	62-0290	Cam - Release	1
4	32151-66	Ring - Retaining	1
5	62-0280	Latch - Lock	1
6	63-2910	Spring - Torsion	1
7	62-1050	Lever - Impeller	1
8	62-1381	Handle - R.H.	1
9	62-1480	Handlegrip	2
10	62-1070	Bushing - Lever	2
11	62-1640	Lever - Trip	1
12	63-2000	Panel - Control	1
13	63-2550	Decal - Panel Top	1
14	62-1490	Plate - Guide	1
15	63-2160	Rod - Chute Crank	1
16	62-1320	Knob - Chute Control	1
17	3290-320	Nut - Push	2
18	62-1520	Cover - Knob	1
19	62-7770	Key - Switch	1
20	40-5940	Switch - On/Off	1
21	3296-2	Nut - Lock	1
22	62-1060	Lever - Traction	1

Ref. No.	Part No.	Description	No. Used
23	63-3380	Spacer - Traction Lever	1
24	3234-29	Screw - Hex Flange Hd.	2
25	3290-359	Screw	1
26	63-2030	Rod - Cross	1
27	62-1391	Handle - L.H.	1
28	32104-76	Screw - Self Tapping	2
29	2412-101	Clip - Wire	2
30	32104-118	Screw - Pan Hd.	2
31	62-1460	Gear - Universal	2
32	32121-50	Pin - Roll	2
33	62-1230	Washer - Rubber	1
34	63-2520	Decal - Panel Front	1
35	3296-47	Nut - Lock	4
36	3234-7	Screw - Hex Flange Hd.	4
37	3290-378	Tie - Cable	2
38	63-2710	Cable - Traction	1
39	63-2720	Spring - Extension	1
40	63-3470	Decal - Adjustment	1
41	63-2700	Cable - Impeller	1
42	63-2170	Cover - Lever Lock	1
*	63-3430	Harness - Wire	1

*Not Illustrated

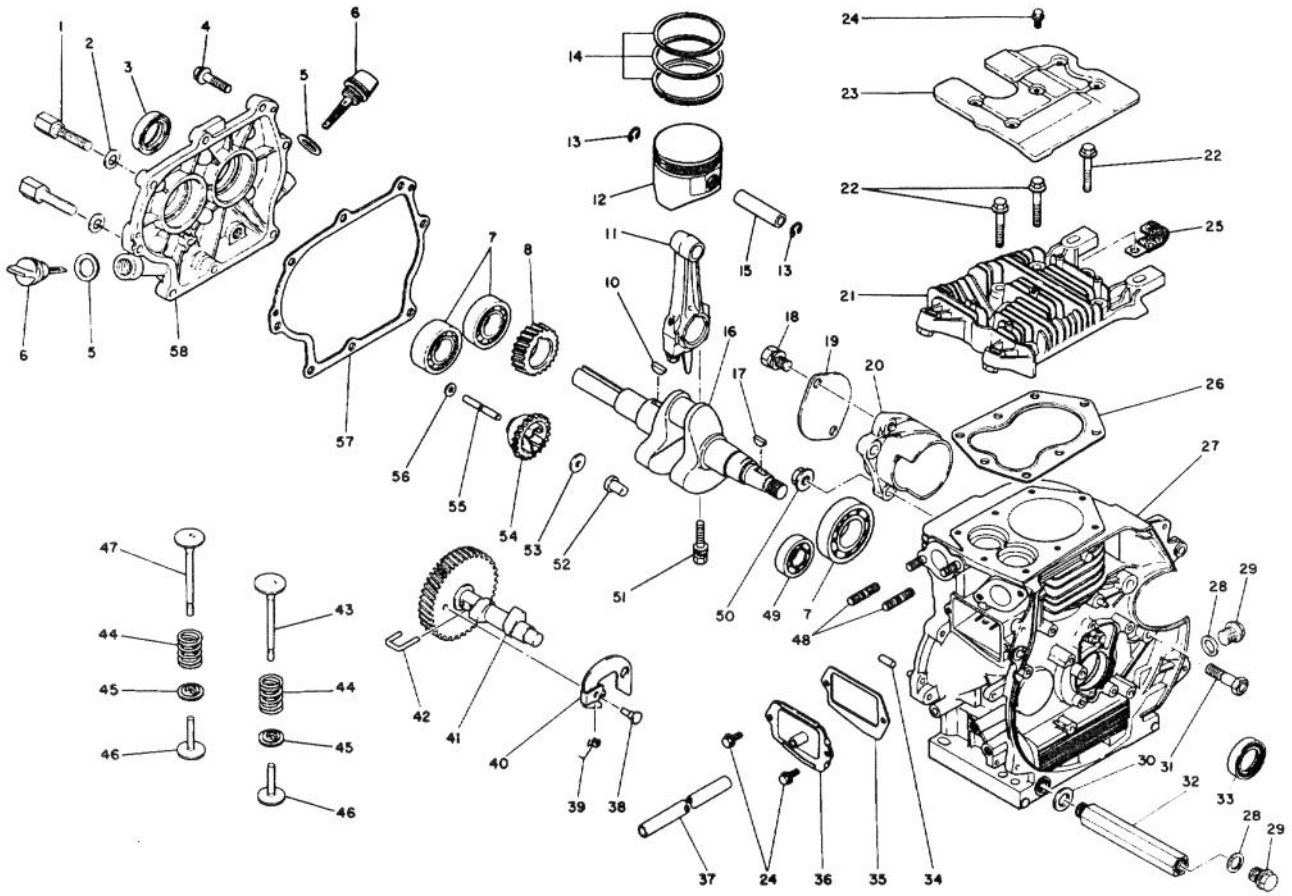

CRANKCASE ASSEMBLY

Ref. No.	Part No.	Description	No. Used
1	65-1460	Bolt - Shoulder	1
2	65-1470	Washer	2
3	65-2140	Seal - Oil	1
4	65-0480	Bolt - Flange	6
5	65-0510	Gasket	2
6	65-0500	Gauge - Oil (Incl. Ref. #5)	2
7	65-0030	Bearing - Ball	3
8	65-0170	Gear - Crankshaft	1
10	65-0180	Key - Woodrufff	1
11	65-2100	Connecting Rod Assembly (Std.) (Incl. Ref #51)	1
*	65-2110	Connecting Rod Assembly (US. .25) (Incl. Ref #51)	1
*	65-2120	Connecting Rod Assembly (US. .50) (Incl. Ref. #51)	1
12	65-2050	Piston Assembly (Std.) (Incl. Ref. #15)	1
13	65-2040	Clip - Piston Pin	2
14	65-1990	Piston Ring Set (Std.)	1
15	65-2130	Pin - Piston	1
16	65-1930	Crankshaft	1
17	65-0200	Key - Woodruff	1
18	65-1440	Bolt & Washer	2
19	65-1410	Cover	1
20	65-1400	Bracket	1

Ref. No.	Part No.	Description	No. Used
21	65-1890	Head - Cylinder	1
22	65-0130	Bolt - Head	8
23	65-0120	Cover - Head	1
24	65-0050	Bolt - Flange	3
25	65-0160	Clamp - Cable	1
†26	65-1920	Gasket - Head	1
27	65-1910	Cylinder Block Assembly (Incl. Ref. #34 & 48)	1
28	65-0090	Gasket	2
29	65-0100	Plug - Drain	2
30	65-0960	Gasket	1
31	65-1390	Bolt - Reamer	2
32	65-0970	Nipple - Oil Drain	1
33	65-0110	Seal - Oil	1
34	65-0080	Pin - Dowel	2
†35	65-0070	Gasket - Breather	1
36	65-0060	Breather Valve Assembly	1
37	65-0770	Tube - Breather	1
38	65-0310	Pin	1
39	65-0300	Spring - Return	1
40	65-0290	Flyweight	1
41	65-1970	Camshaft Assembly (Incl. Ref. #38, 39, 40 & 42)	1
42	65-1980	Pin	1
43	65-1960	Valve - Intake	1

*Not Illustrated
†Included in Gasket Kit No. 65-2350

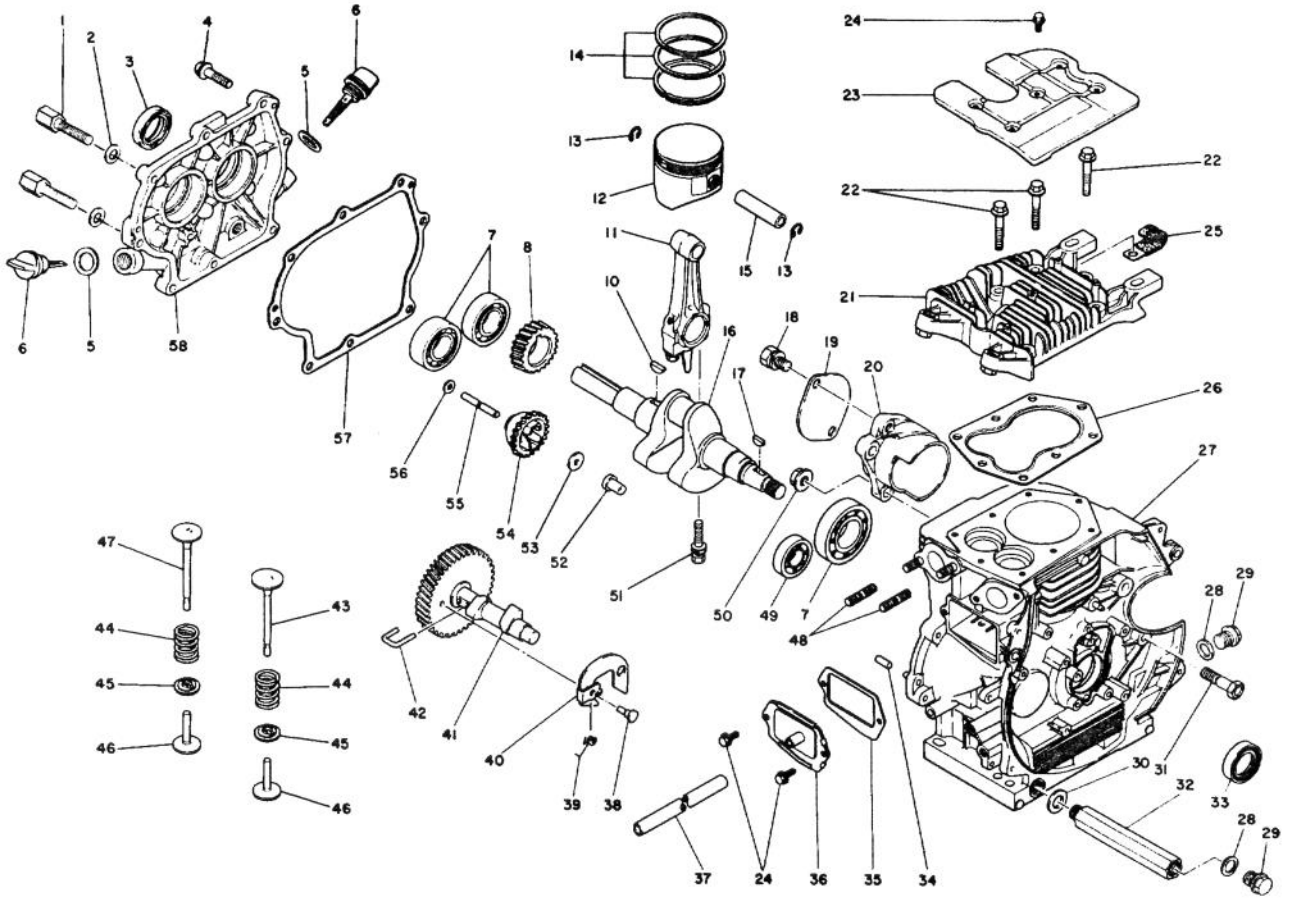

CRANKCASE ASSEMBLY (Continued)

Ref. No.	Part No.	Description	No. Used
44	65-0230	Spring - Valve	2
45	65-0240	Retainer - Valve Spring	2
46	65-0250	Tappet - Valve	2
47	65-1950	Valve - Exhaust	1
48	65-0020	Bolt - Stud	2
49	65-0040	Bearing - Ball	1
50	65-1450	Nut - Flange	2
51	65-0460	Bolt - Connecting Rod	2

Ref. No.	Part No.	Description	No. Used
52	65-0570	Slider - Governor	1
53	65-0580	Spacer	1
54	65-0560	Governor Gear Assembly (Incl. Ref. #52)	1
55	65-0550	Shaft - Governor	1
56	65-0540	Washer	1
†57	65-2160	Gasket - Crankcase	1
58	65-2150	Cover - Crankcase	1

†Included in Gasket Kit No. 65-2350

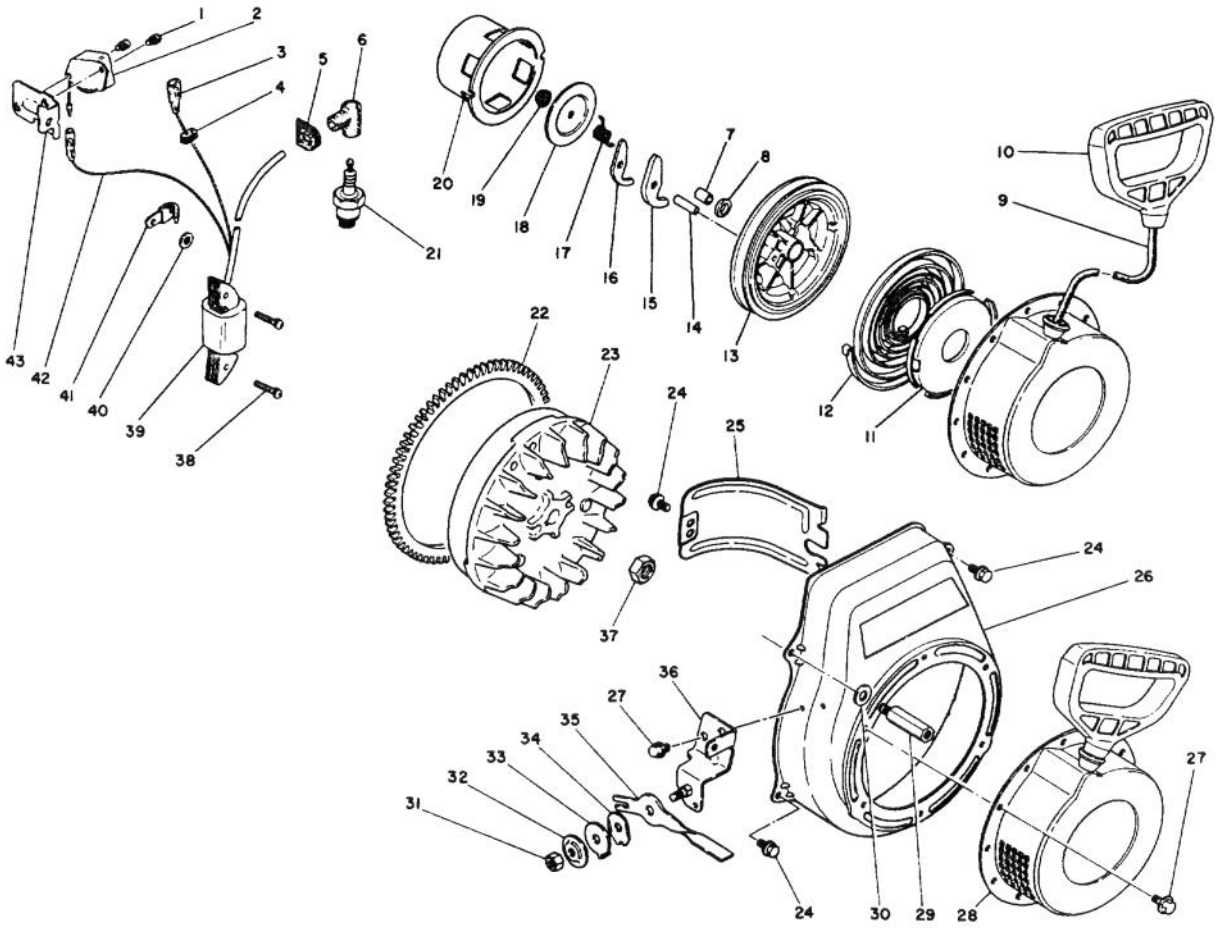

IGNITION ASSEMBLY

Ref. No.	Part No.	Description	No. Used
1	65-0680	Screw & Washer	2
2	65-2370	Unit - Ignition	1
3	65-0650	Wire - Leas	1
4	65-1810	Grommet	1
5	65-0630	Grommet	1
6	65-0620	Cap - Plug	1
7	65-1540	Shaft	1
8	65-1550	Washer	1
9	65-1660	Rope - Starter	1
10	65-1670	Handle - Starter	1
11	65-1650	Case	1
12	65-1640	Spring - Spiral	1
13	65-1630	Reel	1
14	65-1620	Pin	1
15	65-1610	Ratchet	1
16	65-1600	Ratchet	1
17	65-1590	Spring - Friction	1
18	65-1580	Plate - Friction	1
19	65-1570	Nut - Flange	1
20	65-1560	Pulley - Starter	1
21	65-0640	Plug - Spark	1
22	65-2360	Gear - Ring	1
23	65-2180	Flywheel	1
24	65-0050	Bolt - Flange	4

Ref. No.	Part No.	Description	No. Used
25	65-0750	Baffle - Cylinder	1
26	65-2190	Cover - Fan	1
27	65-0840	Bolt - Flange	5
28	65-1530	Recoil Starter Assembly (Incl. Ref. #7-20)	1
29	65-1880	Bolt - Shoulder	1
30	65-1870	Washer	1
31	65-0830	Nut	1
32	65-0820	Washer	1
33	65-0810	Washer - Lock	1
34	65-0800	Spring - Leaf	1
35	65-0790	Lever - Control	1
36	65-0780	Bracket	1
37	65-2200	Nut	1
38	65-0710	Screw & Washer	2
39	65-2380	Coil - Ignition (Incl. Ref. #3, 4 & 42)	1
40	65-0730	Nut - Push	1
41	65-0740	Clamp - Cable	1
42	65-0660	Wire - Lead	1
43	65-1830	Bracket - Unit	1
*	65-2170	Magneto Assy. (Incl. Ref. #1-4, 23, 38, 39 & 42)	1

*Not Illustrated

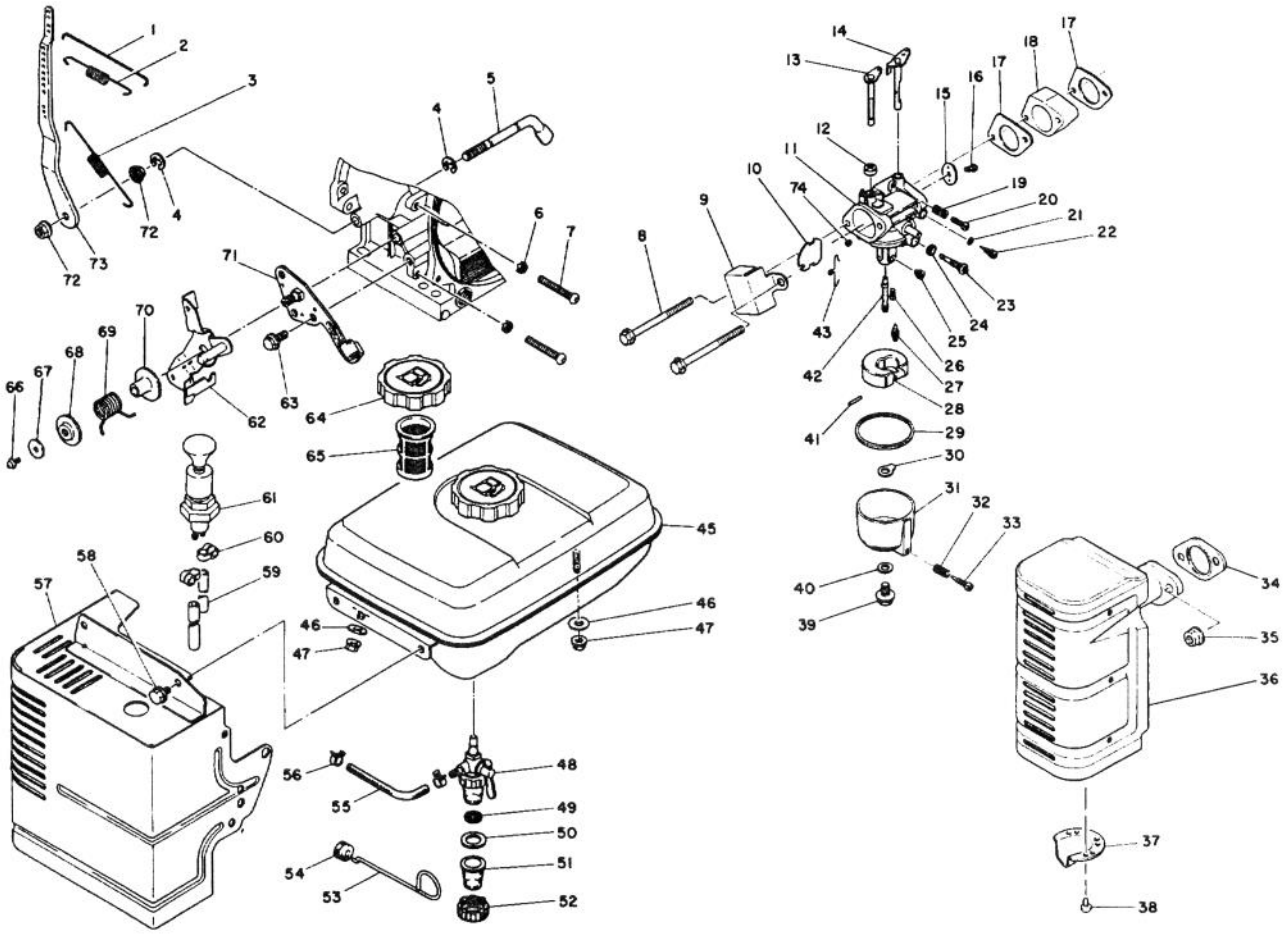

FUEL SYSTEM & MUFFLER ASSEMBLIES

Ref. No.	Part No.	Description	No. Used
1	65-0870	Rod - Governor	1
2	65-0880	Spring - Rod	1
3	65-0900	Spring - Governor	1
4	65-0860	Ring - Snap	2
5	65-0850	Shaft - Governor	1
6	65-1001	Nut	2
7	65-1020	Screw - Machine Pan Hd.	2
8	65-1370	Bolt - Flange	2
9		Cover	1
10	65-1270	Valve - Choke	1
11	65-2210	Carburetor Assembly (Incl. Ref. #10-16 & 19-43)	1
12	65-1250	Cap	1
13	65-1240	Shaft - Choke	1
14	65-2220	Shaft - Throttle	1
15	65-2230	Valve - Throttle	1
16	65-1130	Screw - Throttle Valve	1
†17	65-1080	Gasket - Carburetor	2
18	65-1090	Insulator - Carburetor	1
19	65-1140	Spring - Idle Stop	1
20	65-1150	Screw - Idle Stop	1
21	65-2250	Seal - O-Ring	1

Ref. No.	Part No.	Description	No. Used
22	65-2240	Valve - Needle (Incl. Ref. #21)	1
23	65-2260	Jet - Slow	1
24	65-2270	Gasket	1
25	65-2280	Jet - Main	1
26	65-1210	Screw	1
27	65-1290	Valve	1
28	65-1300	Float	1
29	65-2300	Gasket - Float Bowl	1
30	65-1330	Gasket	1
31	65-1340	Bowl - Float (Incl. Ref. #32 & 38)	1
32	65-1220	Spring	1
33	65-1230	Screw	1
†34	65-2330	Gasket - Exhaust	1
35	54-4670	Nut - Flange Lock	2
36	65-1500	Muffler Assembly (Incl. Ref. #37 & 38)	1
37	65-1510	Pipe - Tail	1
38	65-1520	Screw	3
39	65-2310	Plug - Float Bowl	1
40	65-1350	Gasket - Plug	1
41	65-1310	Pin - Float	1

*Not Illustrated
†Included in Gasket Kit No. 65-2350

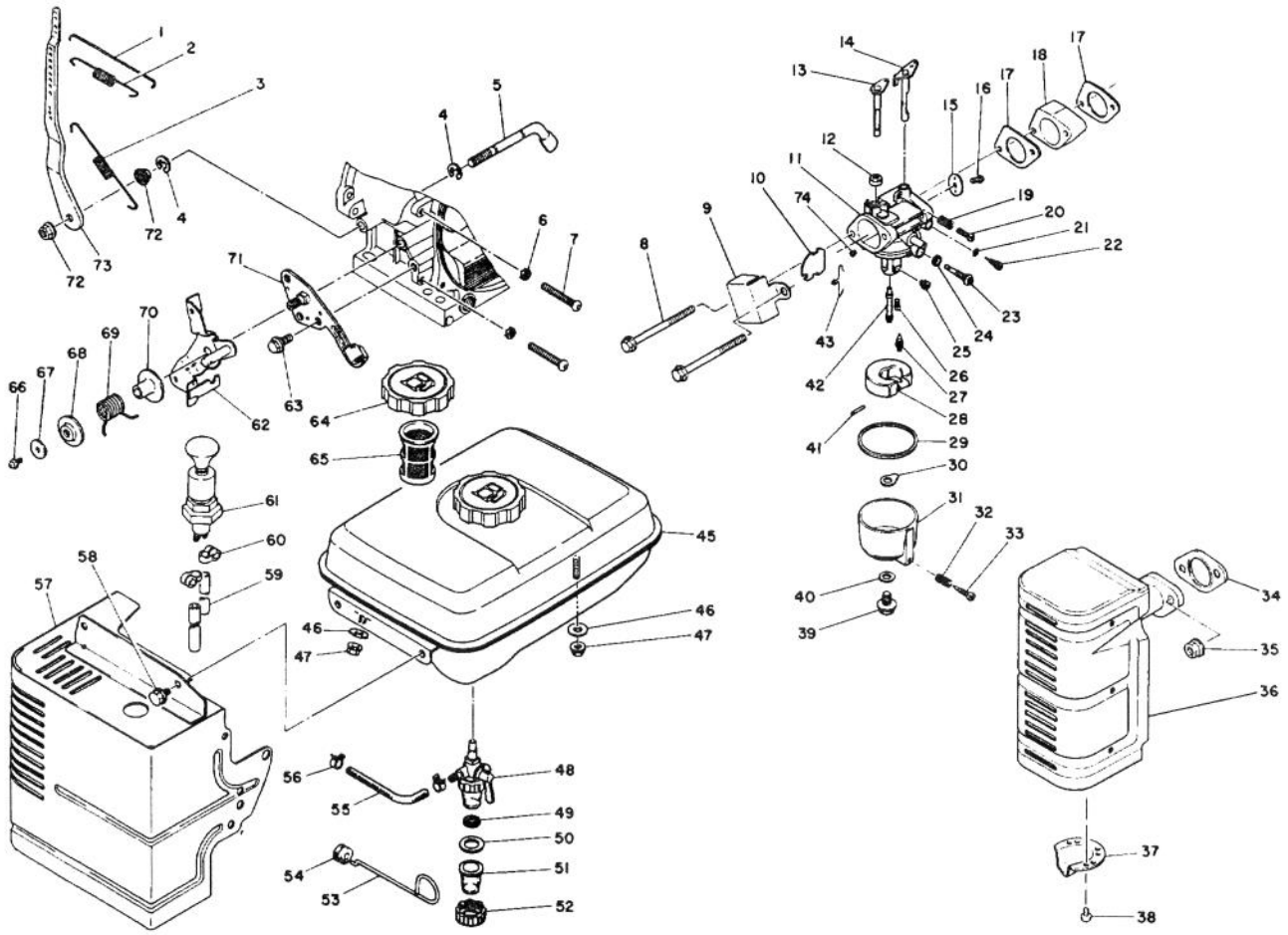

FUEL SYSTEM & MUFFLER ASSEMBLIES (Continued)

Ref. No.	Part No.	Description	No. Used
42	65-2290	Nozzle - Main	1
43	65-1260	Clip	1
45	65-2340	Fuel Tank Assembly (Incl. Ref. #64 & 65)	1
46	65-1700	Gasket	4
47	65-1450	Nut - Flange	4
48	65-1760	Petcock - Fuel (Incl. Ref. #49-52)	1
49	65-1770	Screen	1
50	65-1780	Gasket	1
51	65-1790	Cup	1
52	65-1800	Nut	1
53	65-1420	Rod - Choke	1
54	65-1430	Grommet	1
55	65-1730	Tube - Fuel	1
56	65-1720	Clip - Fuel Tube	2
57	65-1820	Cover - Engine	1
58	65-0050	Bolt - Flange	6
59	65-1860	Hose - Fuel	2

Ref. No.	Part No.	Description	No. Used
60	65-1850	Clamp - Fuel Hose	2
61	65-1840	Fuel Pump Assembly	1
62	65-0980	Lever - Control	1
63	65-0990	Bolt - Flange	1
64	65-1680	Cap - Fuel Tank	1
65	65-1690	Filter - Fuel	1
66	65-0950	Screw & Washer	1
67	65-0940	Washer	1
68	65-1030	Shim (.2)	1
*	65-1040	Shim (.3)	1
*	65-1050	Shim (.4)	1
*	65-1060	Shim (.5)	1
*	65-1070	Shim (.8)	1
69	65-0930	Spring - Return	1
70	65-0920	Pipe - Distant	1
71	65-1000	Panel - Control	1
72	65-0890	Nut - Flange	2
73	65-0910	Lever - Governor	1
74	65-2320	Breather	1

*Not Illustrated

PRODUCT CHANGES

In an effort to make improvements available to TORO owners as quickly as possible, minor changes are incorporated into Toro's products from time to time that do not become immediatly shown in the Parts Catalog. If such a change has been made in your unit, which is not reflected in your manual, see your TORO Distributor or his Authorized TORO Service Dealer for information and part numbers.

IDENTIFICATION AND ORDERING

MODEL AND SERIAL NUMBERS

The Snowthrower has two identification numbers; a model number and a serial number. The two numbers are stamped on a decal which is located on the rear of the engine frame. In any correspondence concerning the snowthrower, supply model and serial numbers to assure that correct information and replacement parts are obtaineed.

To order replacement parts from an Authorized TORO Service Dealer, supply the following information:
1. Model and serial number of the snowthrower.
2. Part number, description, and the quantity of part(s) desired.

NOTE: Do not order by reference number if a parts catalog is being used; use the PART NUMBER.

The Toro Promise

A Two Year Limited Warranty
On All
Gasoline Powered Consumer Products

The Toro Company promises to repair these TORO Products if defective in materials or workmanship. The following time periods from the date of purchase apply:

Residential Product . . . . . 2 Years
Residential Products Used Commercially . . . 45 Days

The cost of parts and labor are included, but the customer pays the transportation costs. Just return any residential product to an Authorized TORO Service Dealer or TORO Distributor.

Should you feel your TORO is defective and wish to rely on The Toro Promise, the following procedure is recommended:

1. Contact any Authorized TORO Service Dealer, TORO Master Service Dealer, or TORO Distributor (the Yellow Pages of your telephone directory is a good reference source).
2. He will either instruct you to return the product to him or recommend another Authorized TORO Service outlet which might be more convenient.
3. Bring the product along with your original sales slip, or other evidence of purchase date, to the service dealer.
4. The servicing dealer will inspect the unit, advise you weather the product is defective and, if so, make all repairs necessary to correct the defect without any extra charge to you.

If for any reason you are dissatisfied with the dealer's analysis of the defect or the service performed, you may contact us:

Write: TORO Customer Service Department
8111 Lyndale Avenue South
Minneapolis, Minnesota 55420

The above remedy of product defects through repair by an Authorized TORO Service Dealer is the purchaser's sole remedy for any defect.

THERE IS NO OTHER EXPRESS WARRANTY. ALL IMPLIED WARRENTIES OF MERCHANTABILITY AND FITNESS FOR USE ARE LIMITED TO THE DURATION OF THE EXPRESS WARRANTY.

Some states do not allow limitations on how long implied warranty lasts, so the above limitation may not apply to you.

This Warranty applies only to parts or components which are defective and dose not cover repairs necessary due to normal wear, misuse, accidents, or lack of proper maintenence. Regular, routine maintenence of the unit to keep it in proper operating condition is he responsibility of the owner.

All warranty repairs reimbursable under The Toro Promise must be performed by an Authorized TORO Service Dealer using Toro approved replacement parts.

Repairs or attempted repairs by anyone other than an Authorized TORO Service Account are not reimbursable under The Toro Promise. In addition, these unauthorized repair attempts may result in additional malfunctions, the correction of which is not covered by warranty.

THE TORO COMPANY IS NOT LIABLE FOR INDIRECT, INCIDENTAL OR CONSEQUENTIAL DAMAGES IN CONNECTION WITH THE USE OF THE PRODUCT INCLUDING ANY COST OR EXPENSE OF PROVIDING SUBSTITUTE EQUIPMENT OR SERVICE DURING PERIODS OF MALFUNCTION OR NON-USE.

Some states do not allow the exclusion or limitation of incidential or consequential damages, so the above limitation or exclusion may not apply to you.

This warranty gives you specific legal rights, and you may also have other rights which vary from state to state.

COUNTRIES OTHER THAN THE UNITED STATES OR CANADA

Customers who have purchased TORO products exported from the United States or Canada should contact thier Toro Distributor (Dealer) to obtain guarantee policies for your country, province or state. If for any reason you are dissatisfied with your Distributor's service or have difficulty obtaining guarantee information, contact the TORO importer. If all other remedies fail, you may contact us at The Toro Company.

Compliance with Radio Interference Regulations Certified.
Certifie Conforme au Reglement sur le Brouillage Radioelectrique.

MAINTENANCE RECORD

Date								