Form Number 3352-443 Rev B

Workman® 3100 with Bed

Model No. 07363 - 250000001 and up.

Parts Catalog

Ordering Replacement Parts
To order replacement parts, please supply the part number, the quantity, and the description of each part desired.

Understanding Reference Numbers
Each Identified part in an illustration has a reference number. The reference number for a part also appears in the parts list, along with other information about the part.

This catalog uses two special reference number formats, one to indicate parts in a service assembly and another to indicate the quantity of a given part in an illustration.

Service Assembly Reference Numbers
Parts in service assemblies have reference numbers in the form a:b. The a represents the reference number of the entire service assembly and the b represents a sequential number unique to each part within the service assembly.

For example, a wheel assembly might be identified by reference number 6, the tire by 6:1, the valve by 6:2, and the wheel by 6:3. When you order the assembly identified by reference number 6, you receive all parts identified by reference numbers 6:1, 6:2, and 6:3. However, you may also order any part individually. Reference numbers of this type appear in illustrations and in part lists.

Reference Numbers Indicating Quantity
In an illustration, if a reference number indicates more than one part, the reference number has the form nX y. The n represents the quantity of the part, the X is the multiplication symbol, and the y represents the reference number.

For example, in an illustration, the reference number 2X 37 means that two of the parts identified by reference number 37 are indicated.

Register your product at www.Toro.com

© The Toro Company - 2005
All Rights Reserved

Contents

Description	Page
Hood and Bumper Assembly	4
Dash Panel Assembly	5
Steering Assembly	6
Steering Pump Assembly No. 106-6726	8
Hydraulic Cylinder Assembly No. 106-2262	9
Brake Accelerator and Clutch Assembly	10
Master Cylinder Assembly No. 104-6782	11
Hydraulic Brake Assembly	12
Clutch Linkage Assembly	13
Shroud and Seat Assembly	14
LH Seat Assembly	15
RH Seat Assembly	16
Roll-Over-Protection-System Assembly	17
Front Wheel Assembly	18
RH Front Brake Assembly No. 87-9170	19
LH Front Brake Assembly No. 87-9180	20
Console Assembly	21
Shift Assembly No. 106-7887	23
Front Suspension Assembly	24
Front Control Arm Assembly	25
Lift Valve and Hydraulic Assembly	26
Hydraulic Valve Assembly No. 43-1950	28
Hydraulic Cylinder Assembly No. 106-7939	29
Hydraulic Pump Assembly No. 106-6649	30
Rear Frame Assembly	31
Rear Axle Assembly	32
Rear Brake Assembly No. 93-7125 (Right) and 93-7126 (Left)	33
Driveshaft Assembly No. 98-2918	34
Tail Light and Fender Assembly	35
Transaxle Assembly	36
Hydraulic Filter and Relay Assembly	37
Battery Assembly	38
Fuel Tank Assembly	39
Engine Assembly	40
Full Bed and Side Panel Assembly	41
Muffler and Relay Assembly	42
Engine Support Assembly	43
Case Assembly Transaxle Assembly No. 105-4180	44
Gear Shaft Assembly Transaxle Assembly No. 105-4180	45
Countershaft Assembly Transaxle Assembly No. 105-4180	46
Shift Fork Assembly Transaxle Assembly No. 105-4180	47
Differential Gear Assembly Transaxle Assembly No. 105-4180	48
Crankshaft Assembly Kohler CH23-76548	49
Crankcase Assembly Kohler CH23-76548	50
Oil Pan / Lubrication Assembly Kohler CH23-76548	51
Head / Valve / Breather Assembly Kohler CH23-76548	52
Ignition / Electrical Assembly Kohler CH23-76548	53
Blower Housing and Baffle Assembly Kohler CH23-76548	54
Starting System Assembly Kohler CH23-76548	55
Fuel System Assembly Kohler CH23-76548	56
Engine Control Assembly Kohler CH23-76548	57
Air Intake / Filtration Assembly Kohler CH23-76548	58
Exhaust Assembly Kohler CH23-76548	59
Attachments and Accessories List	60

Part Description Abbreviations

Part descriptions in this catalog may include the following abbreviations.

AR. . . . . as required
ASM. . . . . assembly
BBC. . . . . Blade Brake Clutch
CARR. . . . . carriage
DEG. . . . . degrees
EXT. . . . . external
FH. . . . . flat head
GA. . . . . gauge
HF. . . . . hex flange
HH. . . . . hex head
HHF. . . . . hex head flange
HHFTF. . . . . hex head flange thread forming
HJ. . . . . hex jam
HLH. . . . . hex lag head
HOC. . . . . height-of-cut
HSBH. . . . . hex socket button head
HSFH. . . . . hex socket flat head
HSH. . . . . hex socket head
HWH. . . . . hex washer head
HWHTF. . . . . hex washer head thread forming
HYD. . . . . hydraulic
INC. . . . . incorporated
LH. . . . . left hand
NI. . . . . nylon insert
NPTF. . . . . national pipe thread fine
PPH. . . . . phillips pan head
PPHTF. . . . . phillips pan head thread forming
PRH. . . . . phillips round head
PTH. . . . . phillips truss head
PTO. . . . . power take off
RH. . . . . right hand
ROPS. . . . . roll over protection system
SFH. . . . . slotted fillister head
SHH. . . . . slotted hex head
SHWH. . . . . slotted hex washer head
SPH. . . . . slotted pan head
SQH. . . . . square head

Footnotes

❶ Not illustrated
❷ Not serviced separately
❸ Obtain parts from your local Kohler dealer.

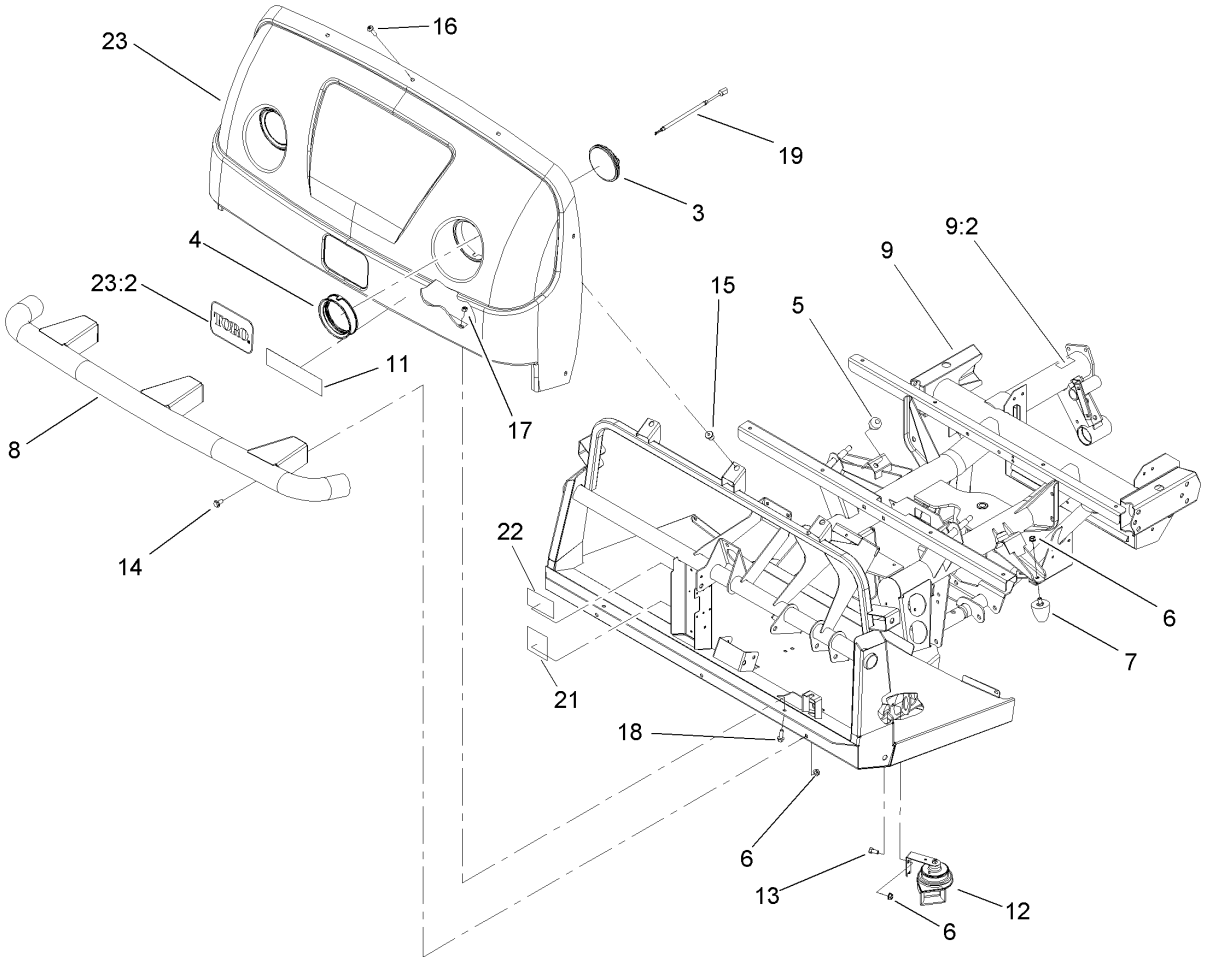

Hood and Bumper Assembly

Ref	Part No.	Qty.	Description
3	99-7310	2	Headlight
4	99-7311	2	Mount-Headlight
5	87-2440	2	Bumper-Rubber
6	3290-357	9	Nut-HHF
7	26-0071	2	Snubber-Rubber
8	106-2369-03	1	Bumper ASM
9	106-7884	1	Operator Frame ASM
9:2	93-7814	1	Decal-Danger
11	106-2393	1	Decal-Workman
12	116749	1	Horn
13	323-4	1	Screw-HH
14	3234-1	6	Screw-HHF
15	106-7883	7	Nut-Well
16	106-7922	7	Screw-PTH
17	3296-29	2	Nut-Lock, NI
18	3234-29	2	Screw-HHF
19	106-2401	2	Harness-Headlight
21	106-7894	1	Decal-Block, Fuse
22	106-7897	1	Decal-Load Rating, Ac
23	107-7979	1	Front Hood ASM
23:2	62-5550	1	Decal

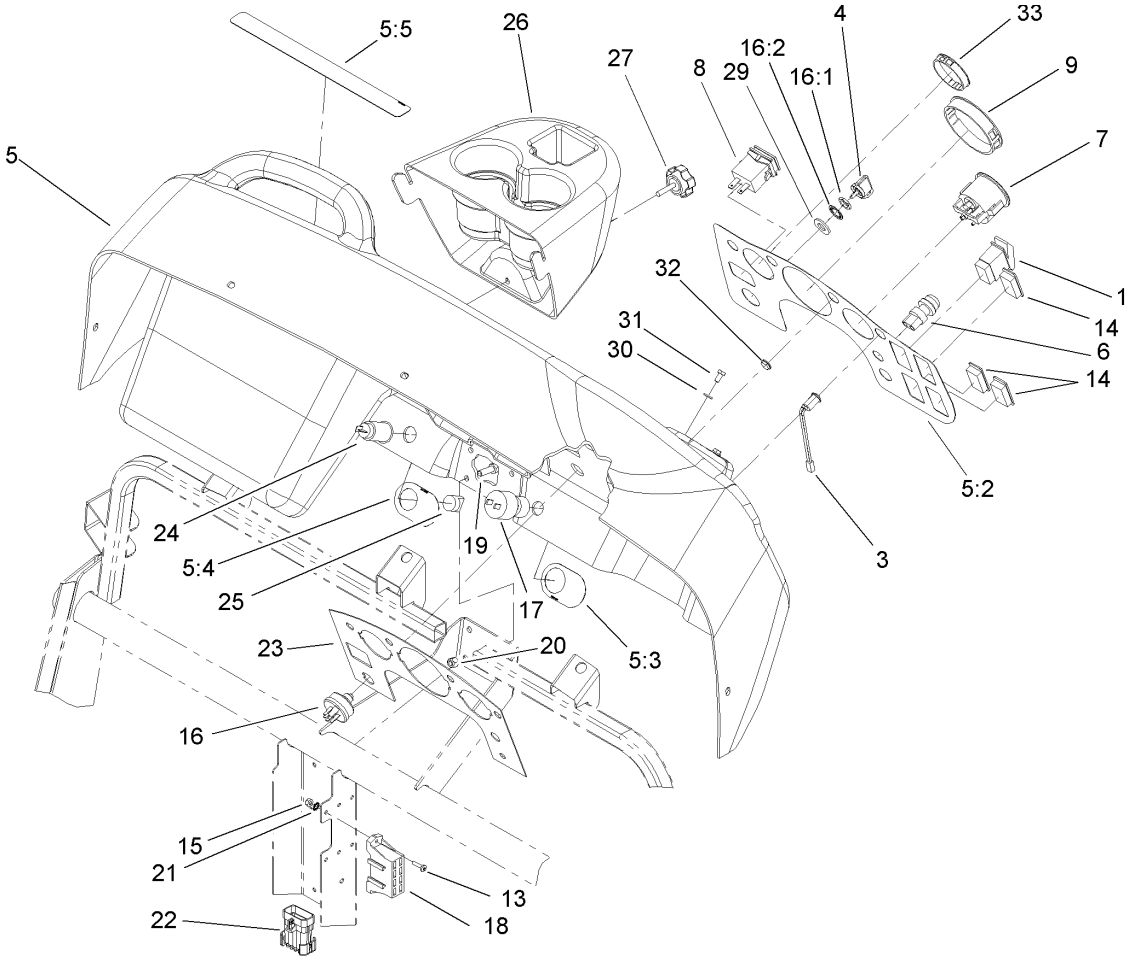

Dash Panel Assembly

Ref	Part No.	Qty.	Description
1	95-8999	1	Switch
3	95-7652	1	Light-Indicator
4	63-8360	1	Key-Ignition
5	106-7885	1	Dash ASM
5:2	106-2352	1	Decal-Dash
5:3	106-2355	1	Decal-Switch, Supervisor
5:4	106-2353	1	Decal-Powerpoint
5:5	106-2383	1	Decal-Warning, Dash
6	18-2830	1	Button-Horn
7	106-2405	1	Gauge-Fuel
8	94-4208	1	Hourmeter
9	106-2359	1	Plug-Cap
13	32105-13	2	Screw-SHH
14	99-7420	3	Plug-Hole
15	3296-2	2	Nut-Lock
16	27-2360	1	Switch-Key
16:1	218-446	1	Nut-Hex
16:2	218-447	1	Washer-Lock
17	94-5245	1	Switch-Key
18	106-7910	1	Harness-Wire, Front
❶18:8	218-578	2	Fuse-10 Amp
❶18:9	109355	2	Fuse-15 Amp
19	322-3	3	Screw-HH
20	3296-29	3	Nut-Lock, NI

Ref	Part No.	Qty.	Description
21	3255-10	1	Washer-Lock / EXT
22	106-7909	1	Harness-Wire, Rear
23	106-2360-03	1	Plate-Dash
24	99-7411	1	Point-Power
25	99-7416	1	Cap
26	106-2358	1	Cover-Reservoir
27	105-1406	1	Knob
29	9202624	1	Washer
30	33093-00	2	Washer-Flat
31	33113-012	2	Screw-HH
32	2410-64	3	Plug-Button
33	87-8360	1	Plug-Hole, Dash

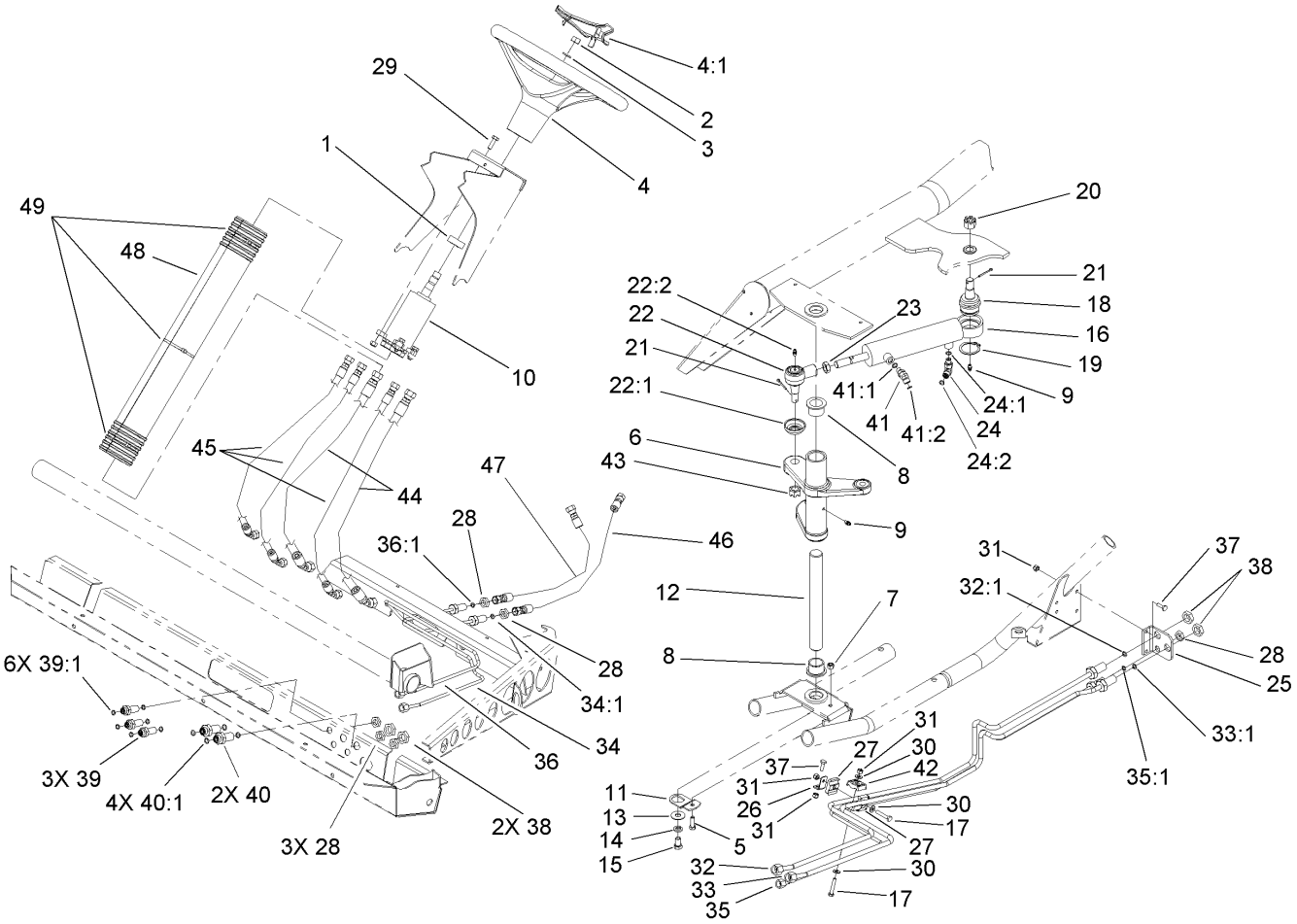

Steering Assembly

Ref	Part No.	Qty.	Description
1	21-9260	1	Cover-Dust
2	3220-6	1	Nut-Jam
3	3253-8	1	Washer-Lock
4	98-1471	1	Wheel-Steering
4:1	98-1468	1	Cover-Wheel, Steering
5	322-5	1	Screw-HH
6	106-2536	1	Arm-Pitman
7	3296-29	1	Nut-Lock, NI
8	94-1291	2	Bushing
9	302-5	2	Fitting-Grease
10	106-6726	1	Pump-Steering
11	106-2287	1	Plate
12	106-2271	1	Shaft-Pivot
13	3256-5	1	Washer-Flat
14	3253-6	1	Washer-Lock
15	324-2	1	Screw-HH
16	106-2262	1	Cylinder-HYD
17	321-8	2	Screw-HH
18	106-6774	1	Joint-Ball
19	32151-104	1	Ring-Retaining, External
20	32136-14	1	Nut-SHH
21	3272-12	2	Pin-Cotter
22	106-6898	1	Joint-Ball
22:1	106-6896	1	Seal

Ref	Part No.	Qty.	Description
22:2	302-5	1	Fitting-Grease
23	3220-11	1	Nut-Jam
24	340-132	1	Fitting-HYD, 90 DEG
24:1	237-78	1	O-Ring
24:2	237-21	1	O-Ring
25	106-7801-03	1	Bracket-Line, Steering
26	106-7807	1	Bracket-Line, Steering
27	106-7839	2	Clamp-Tube
28	340-78	6	Locknut-Bulkhead
29	33114-020	4	Screw-HH
30	3256-22	3	Washer-Flat
31	3296-42	5	Nut-Lock, NI
32	106-7802	1	Tube-HYD
32:1	237-22	1	O-Ring
33	106-7803	1	Tube-HYD
33:1	237-22	1	O-Ring
34	106-7804	1	Tube-HYD
34:1	237-21	1	O-Ring
35	106-7805	1	Tube-HYD
35:1	237-21	1	O-Ring
36	106-7806	1	Tube-HYD
36:1	237-21	1	O-Ring
37	321-4	3	Screw-HH
38	340-70	4	Nut-Lock

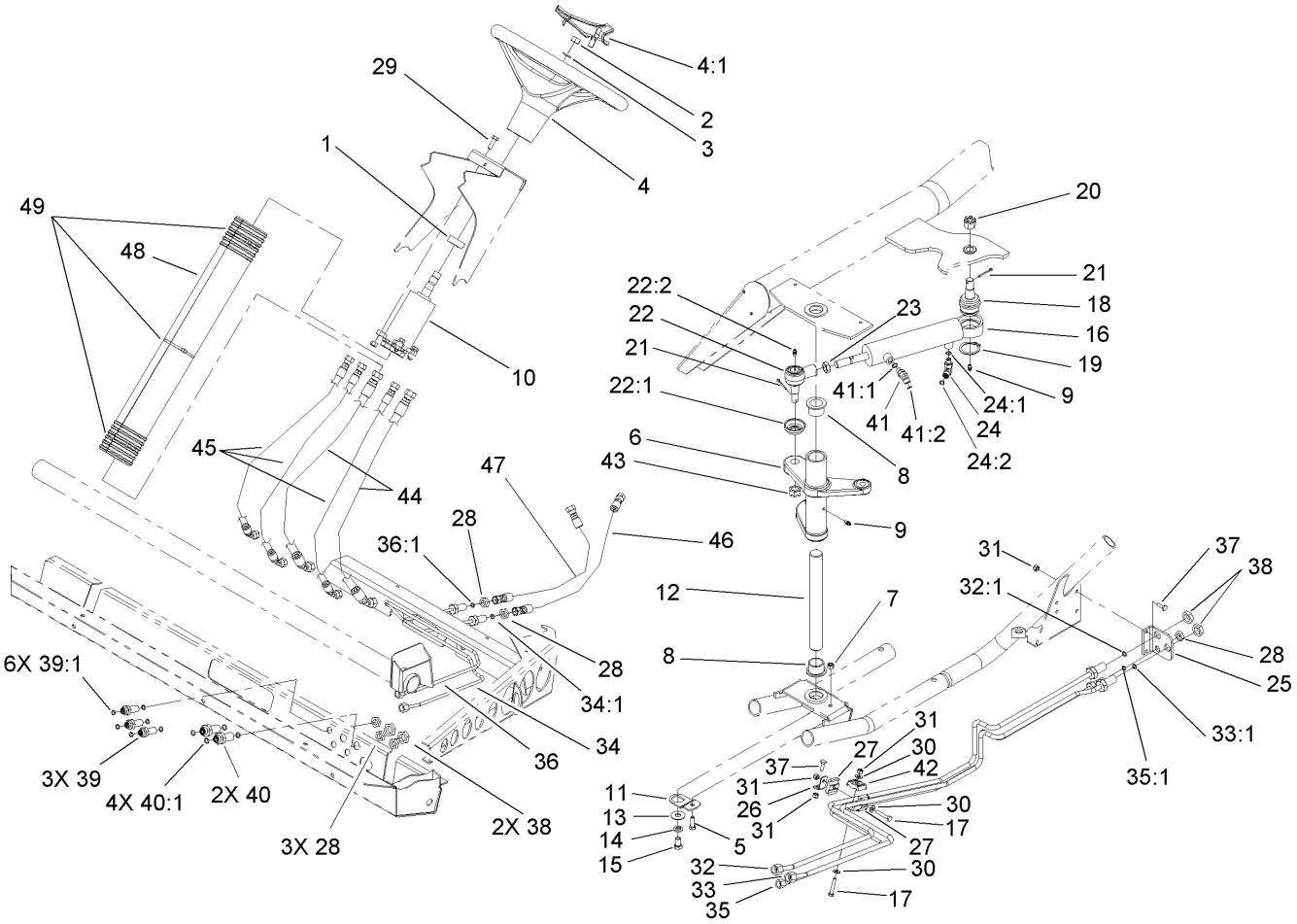

Steering Assembly (continued)

Ref	Part No.	Qty.	Description
39	94-1444	3	Union-Bulkhead
39:1	237-21	2	O-Ring
40	340-71	2	Fitting-Straight, Bulkhead
40:1	237-22	2	O-Ring
41	340-103	1	Fitting-HYD, 45 DEG
41:1	237-78	1	O-Ring
41:2	237-21	1	O-Ring
42	56-7973	2	Clamp-Tube
43	32136-2	1	Nut-SHH
44	106-7975	2	Hose-HYD
45	106-7974	3	Hose-HYD
46	106-7963	1	Hose-HYD
47	106-7962	1	Hose-HYD
48	106-6713	1	Cover-Lines, Steering
49	3290-379	3	Tie-Cable

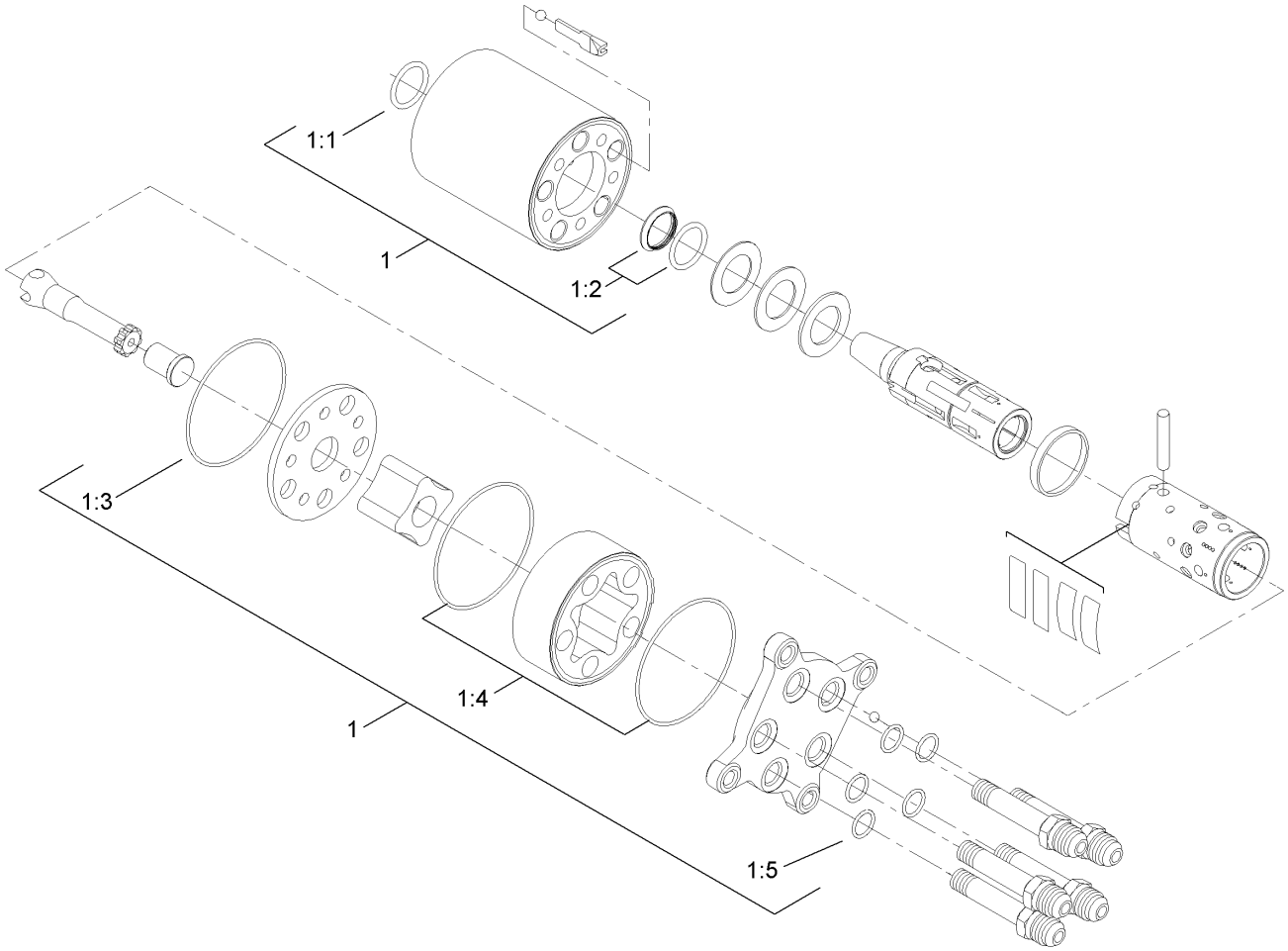

Steering Pump Assembly No. 106-6726

Ref	Part No.	Qty.	Description
1	106-6716	1	Seal Kit
❷1:1		1	Ring-Seal, Dust
❷1:2		1	Seal-Shaft
❷1:3		1	O-Ring
❷1:4		2	O-Ring
❷1:5		5	O-Ring

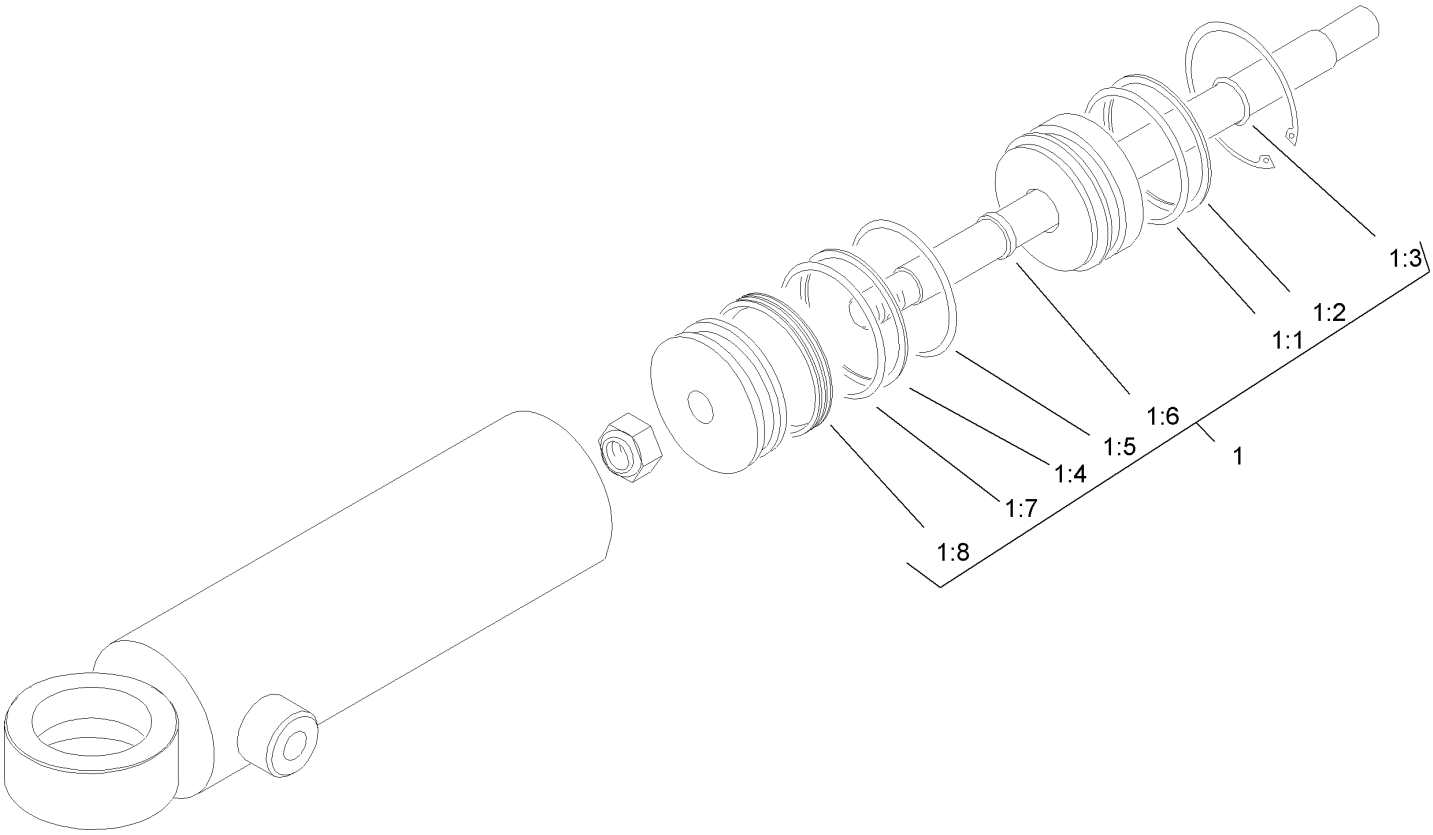

Hydraulic Cylinder Assembly No. 106-2262

Ref	Part No.	Qty.	Description
1	106-6712	1	Seal Kit
❷1:1		1	O-Ring
❷1:2		1	O-Ring
❷1:3		1	Wiper
❷1:4		1	O-Ring
❷1:5		1	Back-Up
❷1:6		1	Seal
❷1:7		1	Seal
❷1:8		1	Ring-Wear

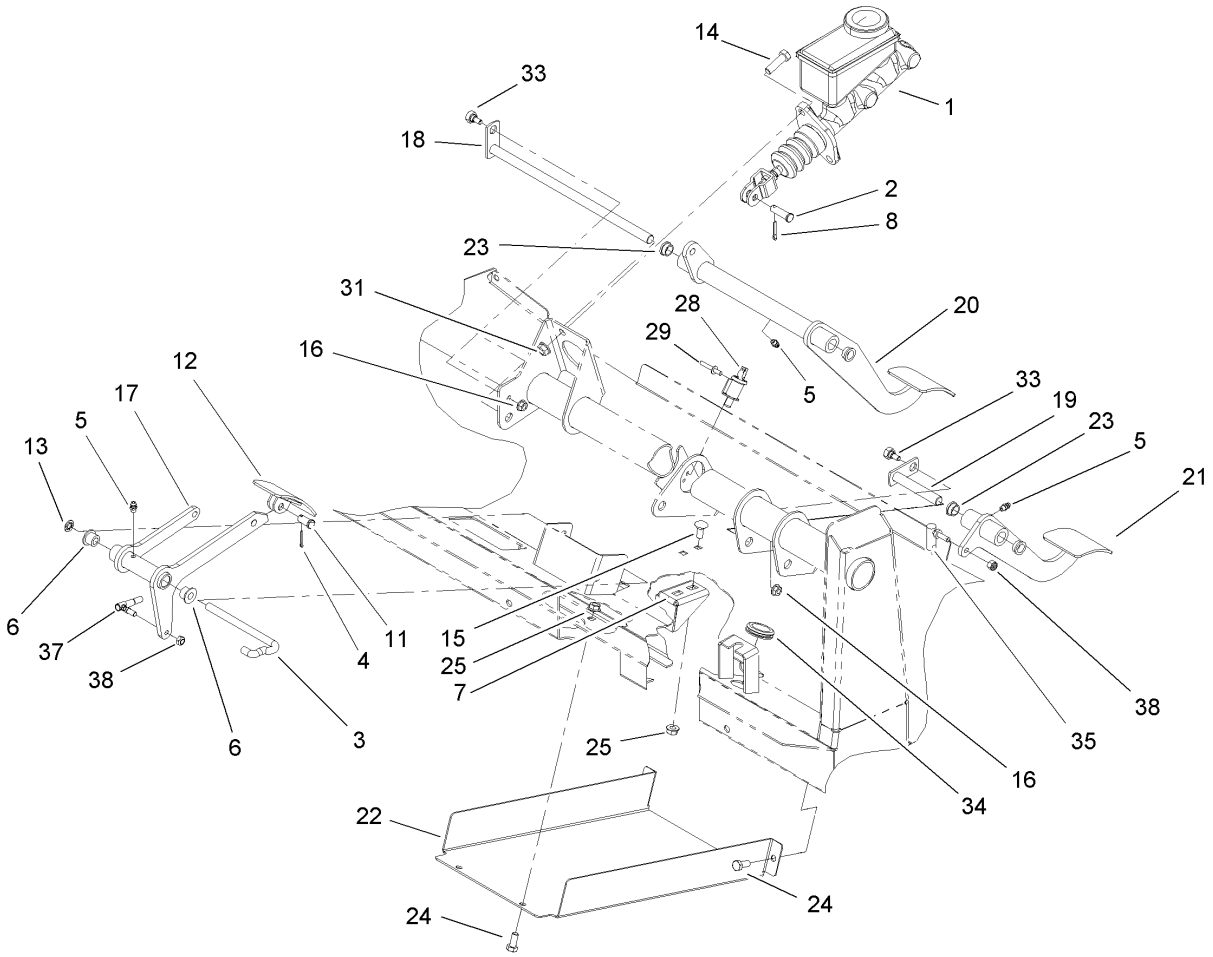

Brake Accelerator and Clutch Assembly

Ref	Part No.	Qty.	Description
1	104-6782	1	Cylinder-Master
2	283-2	1	Pin-Clevis
3	87-2880	1	Shaft-Pedal, Accelerator
4	3272-6	1	Pin-Cotter
5	302-5	3	Fitting-Grease
6	256-259	2	Bushing-Flange
7	106-2421	1	Bracket-Mount, Cable
8	3272-10	1	Pin-Cotter
11	283-85	1	Pin-Clevis
12	93-8969-03	1	Pedal
13	32151-56	1	Ring-Retaining, External
14	323-7	2	Screw-HH
15	3230-1	2	Bolt-CARR
16	32128-33	2	Nut-HF
17	106-2471-03	1	Accelerator Pedal Arm
18	106-2475	1	Brake Shaft ASM
19	106-2476	1	Clutch Shaft ASM
20	106-2461-03	1	Brake Pedal ASM
21	106-2457-03	1	Clutch Pedal ASM
22	106-2427-03	1	Cover
23	256-156	4	Bushing-Flange
24	322-3	4	Screw-HH
25	32128-20	6	Nut-HF
28	55-7120	1	Switch-Brake, Parking

Ref	Part No.	Qty.	Description
29	3269-23	2	Rivet-Pop
31	3290-357	2	Nut-HHF
33	63-3410	2	Screw-Shoulder
34	240-5	1	Grommet
35	2411-34	1	Joint-Ball
37	18-1720	1	Governor Ball Joint ASM
38	3296-13	2	Nut-Lock NI

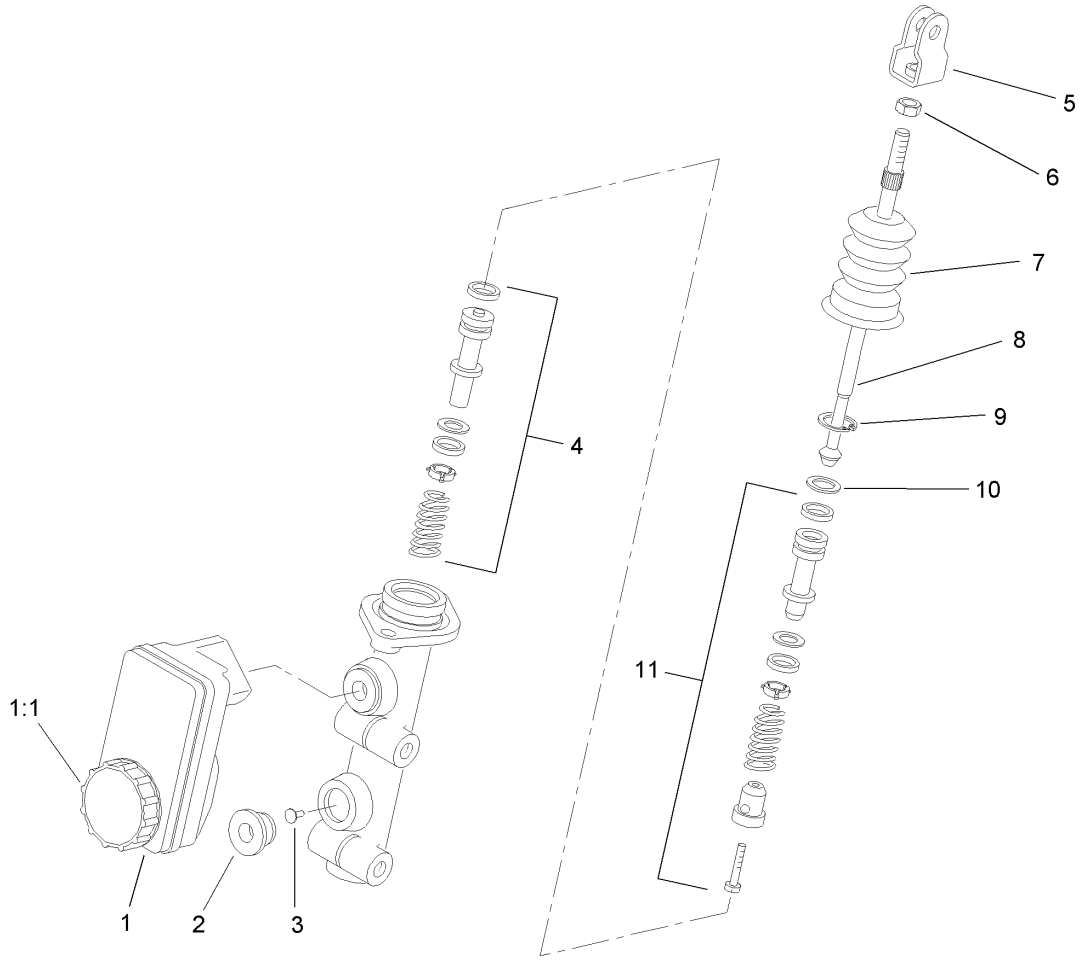

Master Cylinder Assembly No. 104-6782

Ref	Part No.	Qty.	Description
1	104-6845	1	Reservoir ASM
1:1	92-4112	1	Cap ASM
2	93-8971	2	Seal-Port, Flange
3	92-4103	1	Pin-Stop
4	92-4102	1	Secondary Piston ASM
5	92-4110	1	Clevis
6	21-0360	1	Nut-Hex
7	94-5209	1	Cover-Dust
8	94-5210	1	Rod-Push
9	92-4109	1	Ring-Snap
10	92-4108	1	Retainer-Washer
11	92-4101	1	Primary Piston ASM

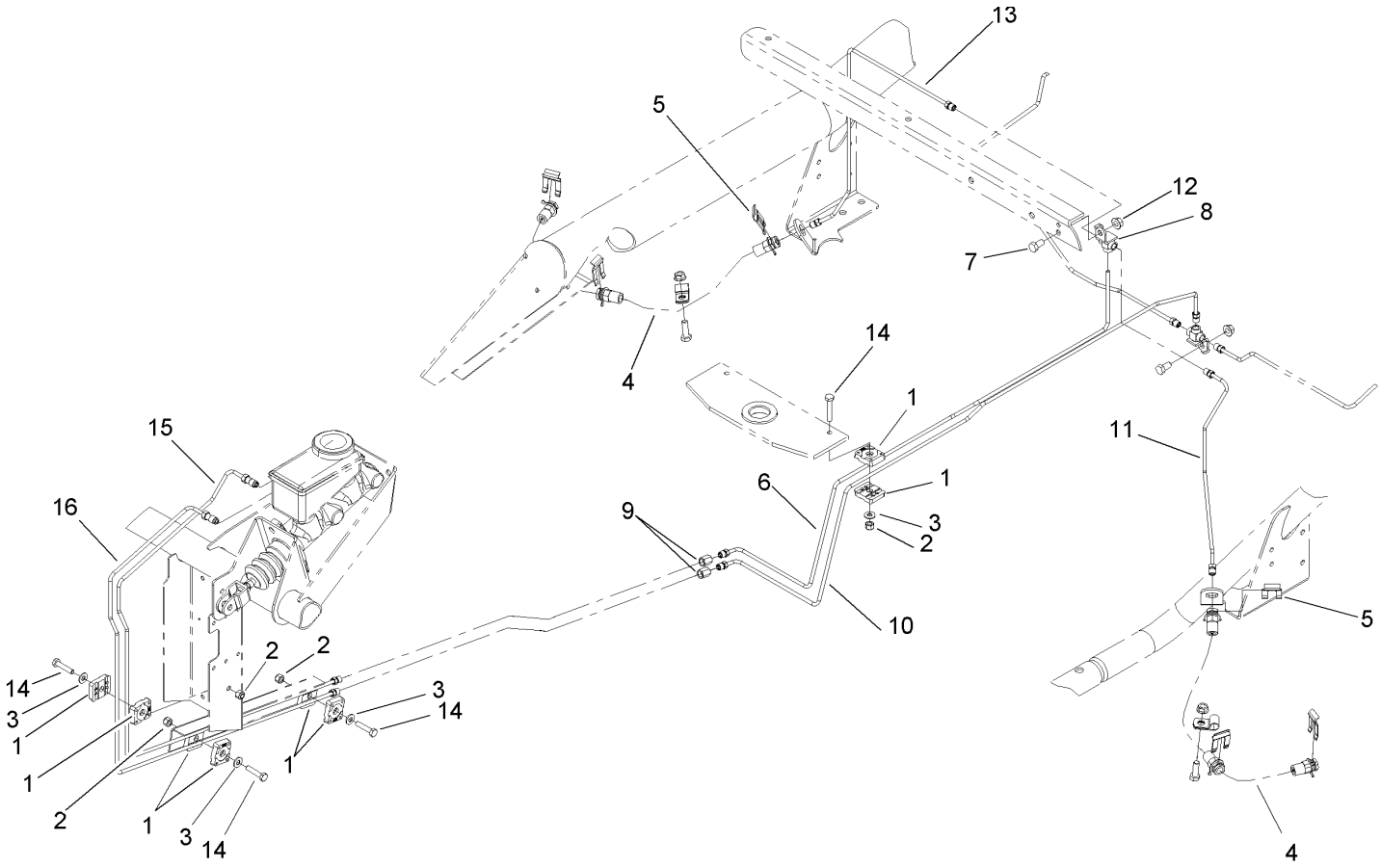

Hydraulic Brake Assembly

Ref	Part No.	Qty.	Description
1	87-7660	8	Clamp-Tube
2	3296-42	4	Nut-Lock, NI
3	3256-22	4	Washer-Flat
4	93-7123	2	Front Brake Hose ASM
5	87-3580	2	Clip-Retainer
6	106-6686	1	Tube ASM
7	322-2	1	Screw-HH
8	87-3560	1	Tee
9	87-3570	2	Union
10	106-6687	1	Tube ASM
11	106-6688	1	Tube ASM
12	32128-20	1	Nut-HF
13	106-6689	1	Tube ASM
14	321-8	4	Screw-HH
15	106-6683	1	Tube ASM
16	106-6684	1	Tube ASM

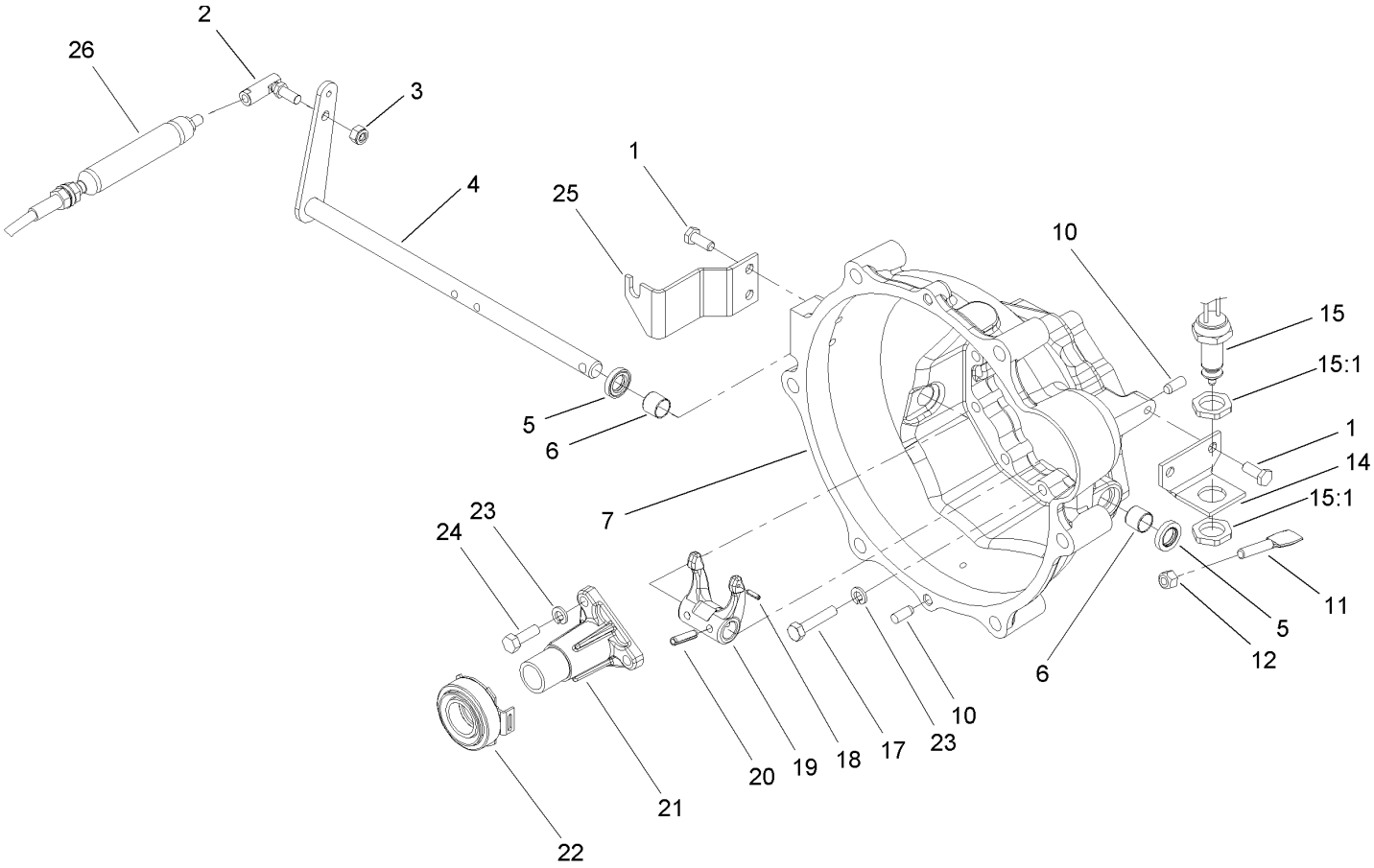

Clutch Linkage Assembly

Ref	Part No.	Qty.	Description
1	33114-020	4	Screw-HH
2	2411-33	1	Balljoint-RH (W / Grommet)
3	3296-4	1	Nut-Lock
4	87-5290	1	Shaft-Release
5	87-1920	2	Seal-Oil
6	87-3770	2	Bushing-Housing, Bell
7	93-7121	1	Housing-Bell
10	87-1910	2	Pin-Dowel
11	87-5360	1	Paddle-Clutch, Switch
12	3296-29	1	Nut-Lock, NI
14	87-5350	1	Bracket-Clutch, Switch
15	87-5490	1	Switch-Clutch
15:1	3218-20	2	Nut-Jam
17	33114-040	9	Screw-HH
18	32121-7	1	Pin-Roll, Slotted
19	87-5300	1	Fork-Clutch
20	32121-24	2	Pin-Spring
21	87-5320	1	Release-Guide
22	87-2100	1	Bearing-Out, Throw
23	3253-4	12	Washer-Lock
24	33114-025	3	Screw-HH
25	106-2523	1	Bracket-Clutch
26	106-2450	1	Cable-Clutch

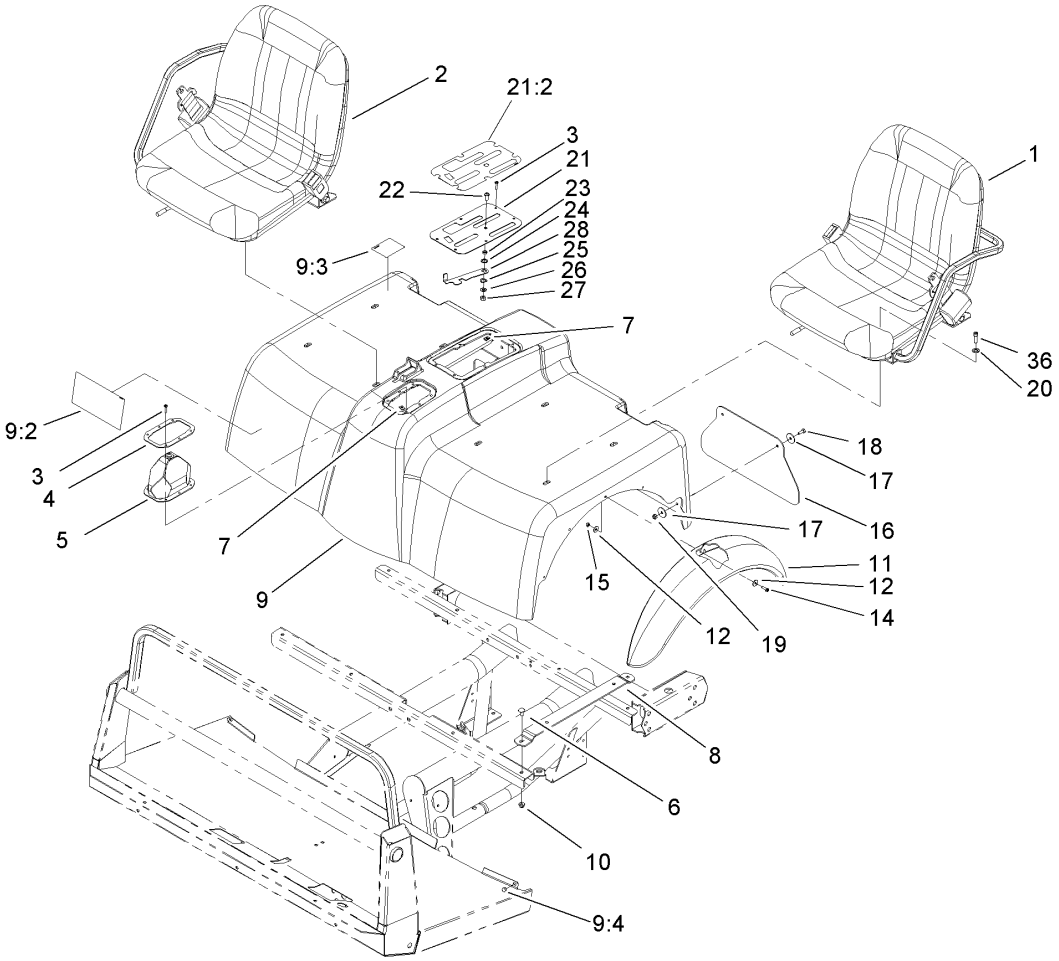

Shroud and Seat Assembly

Ref	Part No.	Qty.	Description
❷1		1	LH Seat ASM
❷2		1	RH Seat ASM
3	32144-36	12	Screw-PPH
4	87-3760-03	1	Plate-Boot, Shift
5	87-8620	1	Shift Boot ASM
6	3230-1	8	Bolt-CARR
7	106-2388	12	Clip-Fastener
8	107-7957-03	4	Seat Bracket ASM
9	106-2362	1	Seatbase ASM
9:2	106-2384	1	Decal-Reference, Quick
9:3	93-9448	1	Decal-Fuel
9:4	107-8042	2	Bumper-Rubber
10	104-8300	8	Nut-Flange, NI
11	106-2375	2	Fender-Front
12	3256-61	20	Washer-Flat
14	32105-13	10	Screw-SHH
15	3296-2	10	Nut-Lock
16	106-2378	2	Mudflap
17	3256-55	8	Washer-Flat
18	321-4	4	Screw-HH
19	3296-16	4	Nut-Lock, NI
20	3256-74	8	Washer-Flat
21	106-7886	1	Control Plate ASM
21:2	106-2377	1	Decal-Console

Ref	Part No.	Qty.	Description
22	3274-55	1	Screw-HSBH
23	82-4240	1	Spacer-Bearing
24	94-8196	1	Washer-Nylon
25	3290-221	1	Washer-Spring
26	3256-23	1	Washer-Flat
27	3296-29	1	Nut-Lock, NI
28	106-7984-03	1	Lever-Detent
36	3274-22	8	Screw-HSH

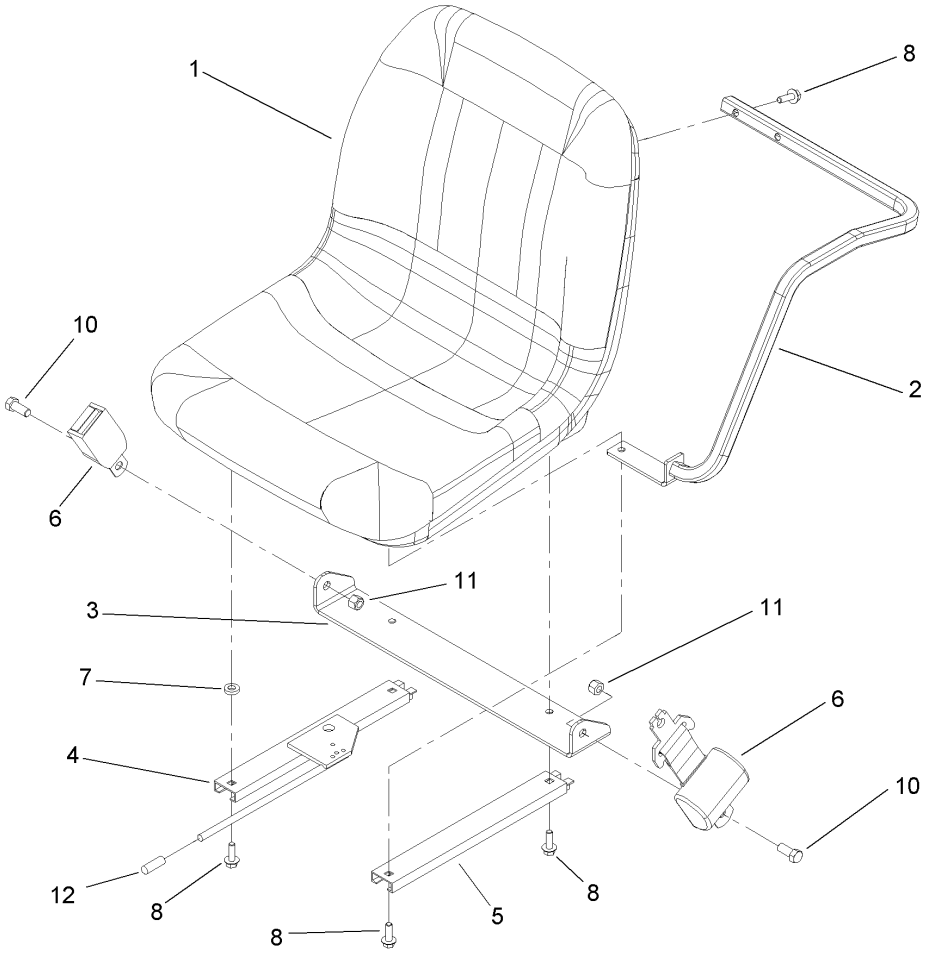

LH Seat Assembly

Ref	Part No.	Qty.	Description
1	106-6672	1	Seat
2	106-7842	1	LH Armrest ASM
3	106-7845	1	Bracket-Belt, Seat
4	106-7847	1	Adjuster-Seat, W/ Handle
5	107-7959	1	Adjuster-Slave, 7 Inch
6	106-7848	1	Seat Belt ASM
7	80-7730	1	Spacer
8	3234-29	6	Screw-HHF
10	3212-4	2	Screw-HH
11	3296-7	2	Nut-Lock
12	106-7953	1	Grip-Gray

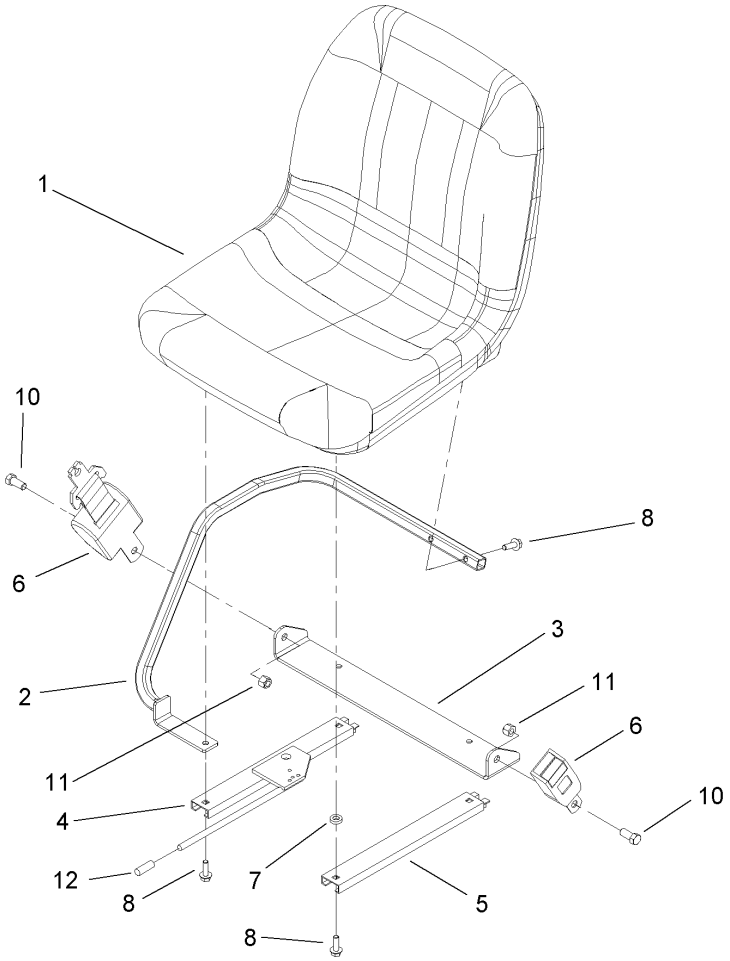

RH Seat Assembly

Ref	Part No.	Qty.	Description
1	106-6672	1	Seat
2	106-7844	1	RH Armrest ASM
3	106-7845	1	Bracket-Belt, Seat
4	106-7847	1	Adjuster-Seat, W/ Handle
5	107-7959	1	Adjuster-Slave, 7 Inch
6	106-7848	1	Seat Belt ASM
7	80-7730	1	Spacer
8	3234-29	6	Screw-HHF
10	3212-4	2	Screw-HH
11	3296-7	2	Nut-Lock
12	106-7953	2	Grip-Gray

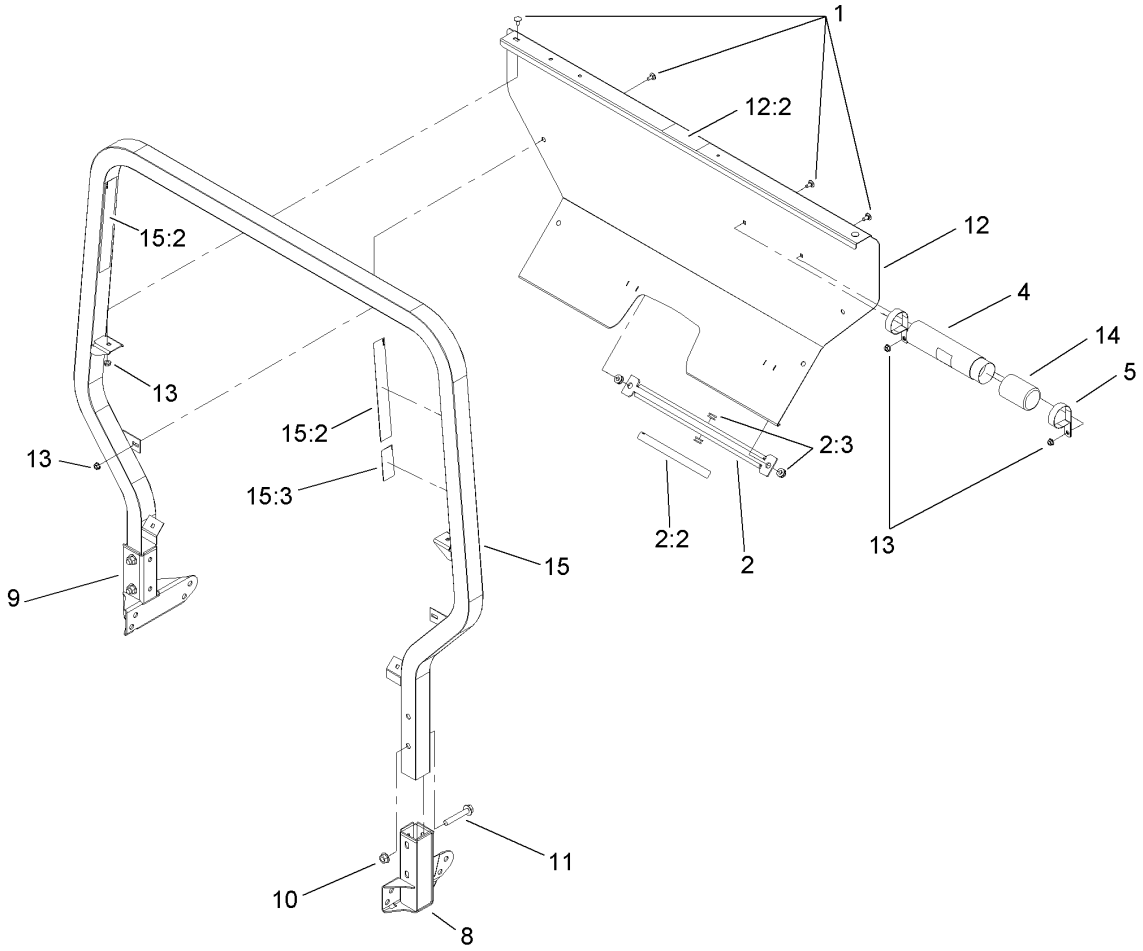

Roll-Over-Protection-System Assembly

Ref	Part No.	Qty.	Description
1	3230-18	8	Screw-CARR
2	105-7960	1	Bed Support ASM
2:2	93-9852	1	Decal-Warning
2:3	92-5972	4	Grommet-Rubber
4	104-7050	1	Housing-Manual
5	2412-133	2	R-Clamp
8	87-6950-03	1	LH Receiver ASM
9	87-6960-03	1	RH Receiver ASM
10	32128-23	4	Nut-HF
11	3234-40	4	Screw-HF
12	106-2409	1	ROPS Cover ASM
12:2	105-4215	1	Decal-Caution
13	32128-20	8	Nut-HF
14	104-7048	1	Cap-Housing
15	106-2412	1	ROPS ASM
15:2	106-7767	2	Decal-ROPS
15:3	93-9850	1	Decal-Roll Over

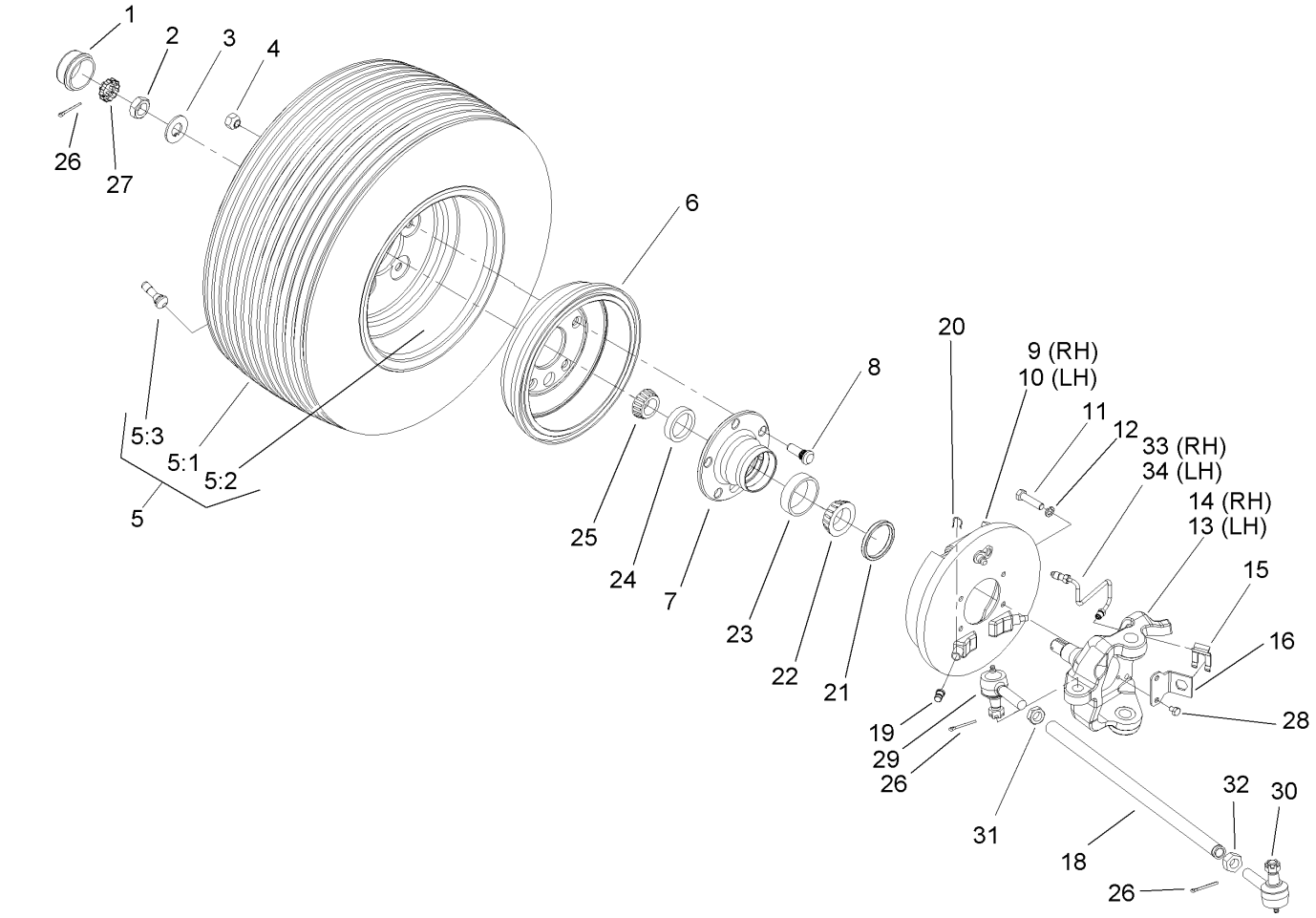

Front Wheel Assembly

Ref	Part No.	Qty.	Description
1	241-119	2	Cap-Dust
2	3220-7	2	Nut-Jam
3	93-0309	2	Washer-Tab
4	23-7270	10	Nut-Wheel
❷5		2	Tire And Wheel ASM
5:1	106-7862	1	Tire
5:2	87-5720	1	Front Rim ASM
5:3	232-27	1	Stem-Valve
6	93-7128	2	Drum-Brake
7	87-5560	2	Hub-Front
8	87-8730	10	Stud
9	87-9170	1	RH Front Brake ASM
10	87-9180	1	LH Front Brake ASM
11	323-6	8	Screw-HH
12	3253-21	8	Washer-Lock
13	106-6745	1	Spindle-LH
14	106-6746	1	Spindle-RH
15	87-3580	2	Clip-Retainer
16	106-6747	2	Bracket-Spindle
18	106-2327	2	Tie Rod-Steering
19	87-3450	2	Plug-Plate Brake, Front
20	87-3310	2	Clip-Cable, Brake
21	87-3590	2	Seal-Bearing
22	254-106	2	Cone-Bearing, Tapered

Ref	Part No.	Qty.	Description
23	254-107	2	Cup-Bearing, Tapered
24	254-72	2	Bearing-Cup, Tapered
25	254-94	2	Bearing-Cone, Tapered
26	3272-12	6	Pin-Cotter
27	93-0307	2	Nut-Lock, Retainer
28	321-1	4	Screw-HH
29	106-6694	2	Rod End-Tie, RH
30	106-6695	2	Rod End-Tie, LH
31	3220-11	2	Nut-Jam
32	3218-21	2	Nut-Jam
33	106-7970	1	RH Brake Tube ASM
34	106-7971	1	LH Brake Tube ASM

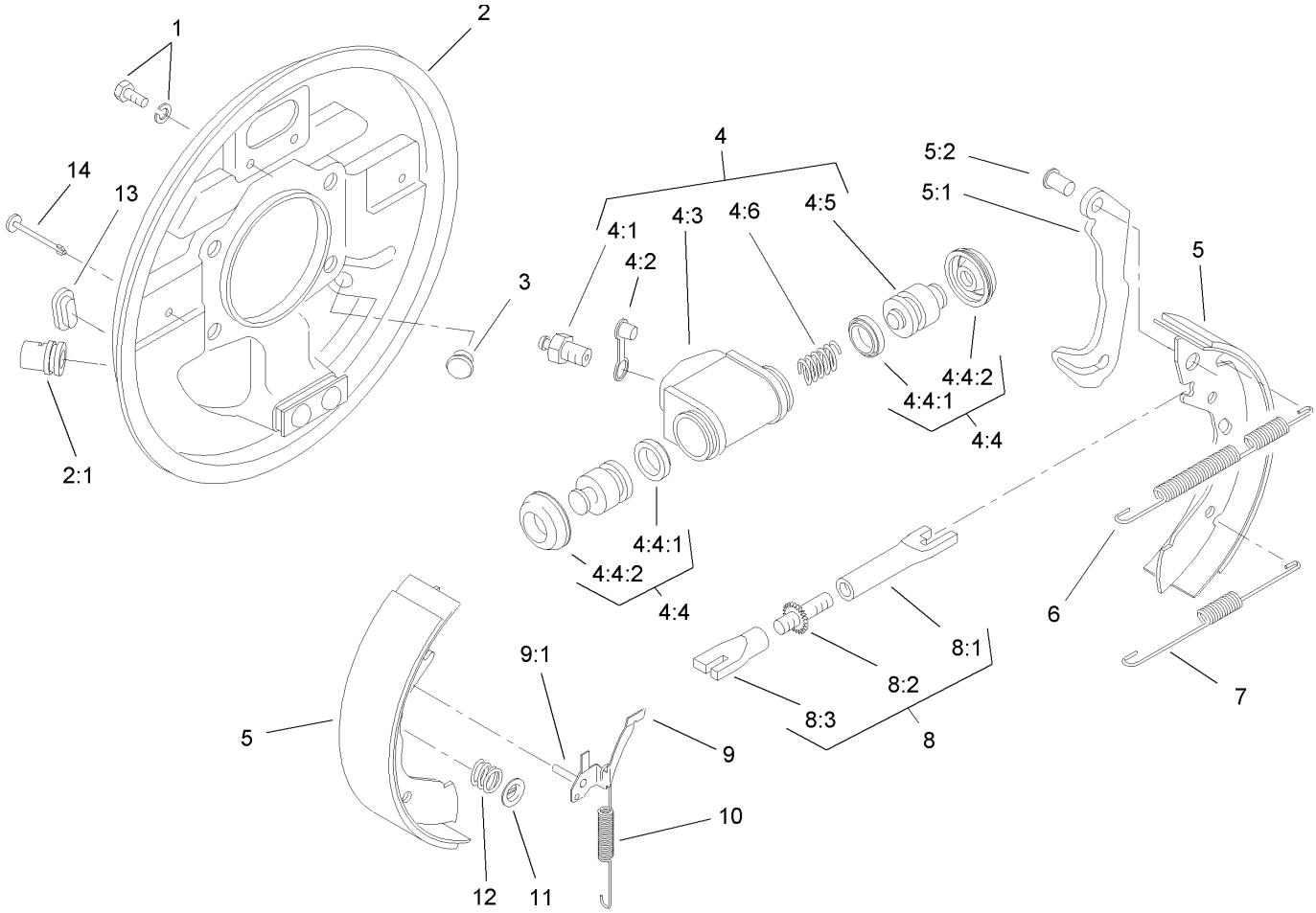

RH Front Brake Assembly No. 87-9170

Ref	Part No.	Qty.	Description
1	92-4135	2	Bolt-Set
2	92-4100	1	RH Backplate ASM
❷2:1		1	Guide-Pipe
3	92-4146	1	Plunger ASM
4	92-4118	1	Wheel Cylinder ASM
4:1	92-4113	1	Screw-Bleed
4:2	92-4114	1	Cap-Screw, Bleed
❷4:3		1	Body
4:4	92-4119	1	Seal Kit
❷4:4:1		2	Seal-L Type
❷4:4:2		2	Cover-Dust
❷4:5		2	Piston
❷4:6		1	Spring
5	92-4143	1	Lined Shoe Kit
❷5:1		1	Lever-Operating
❷5:2		1	Pin
6	92-4148	1	Spring-Return, Shoe (Upper, RH)
7	92-4149	1	Spring-Return, Shoe (Lower)
8	92-4145	1	RH Adjustor ASM
❷8:1		1	Pushrod-Female
❷8:2		1	Bolt-Adjuster
❷8:3		1	Sleeve-Adjuster
9	92-4124	1	RH Pawl Lever ASM
❷9:1		1	Pin-Pawl

Ref	Part No.	Qty.	Description
10	92-4151	1	Spring-Adjuster, RH
11	92-4131	2	Washer-Hold Down, Shoe
12	92-4152	2	Spring-Hold Down, Shoe
13	92-4134	2	Plug-Inspection
14	92-4133	2	Pin-Hold Down, Shoe

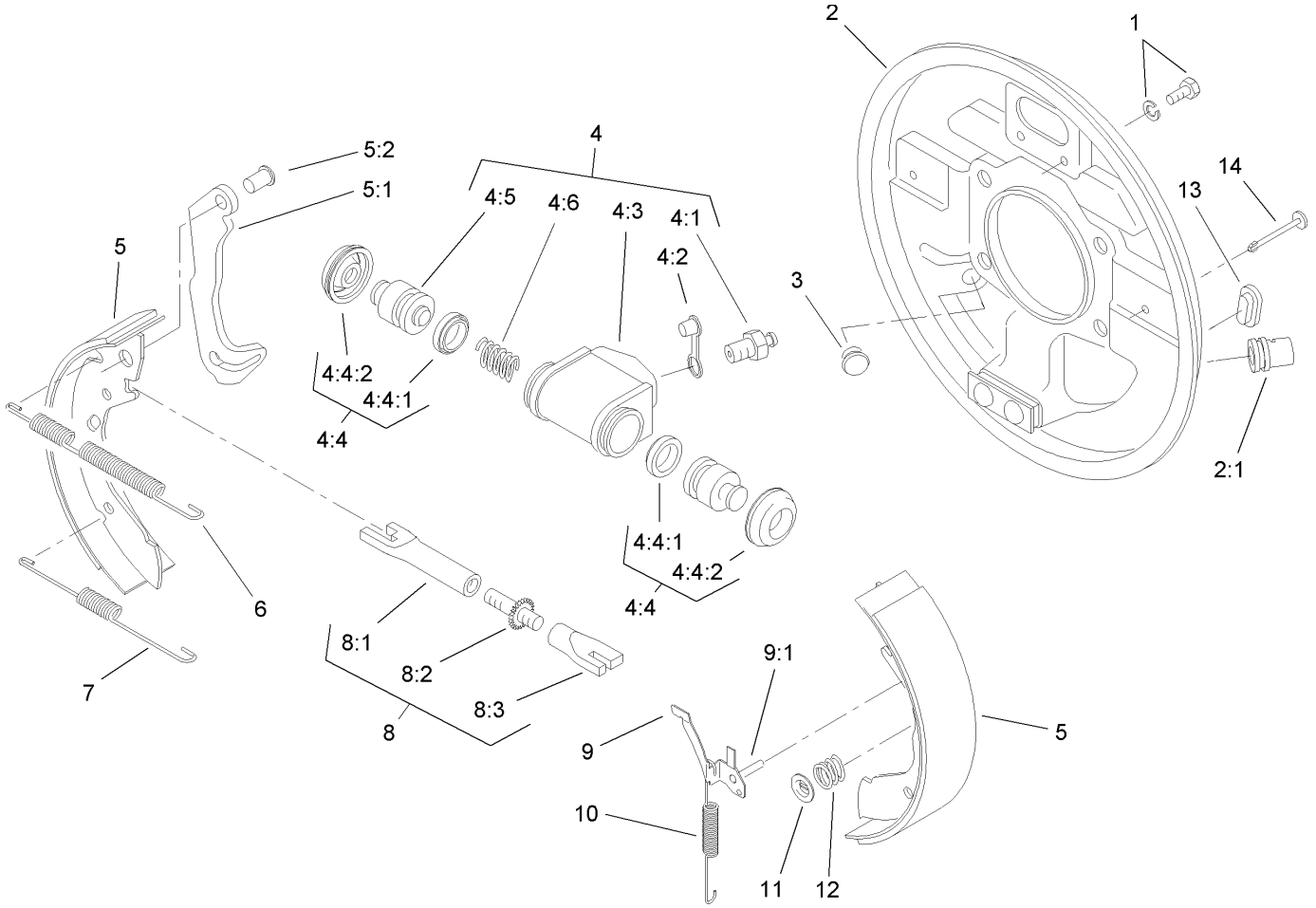

LH Front Brake Assembly No. 87-9180

Ref	Part No.	Qty.	Description
1	92-4135	2	Bolt-Set
2	92-4136	1	LH Backplate ASM
❷2:1		1	Guide-Pipe
3	92-4146	1	Plunger ASM
4	92-4117	1	Wheel Cylinder ASM
4:1	92-4113	1	Screw-Bleed
4:2	92-4114	1	Cap-Screw, Bleed
❷4:3		1	Body
4:4	92-4119	1	Seal Kit
❷4:4:1		2	Seal-L Type
❷4:4:2		2	Cover-Dust
❷4:5		2	Piston
❷4:6		1	Spring
5	92-4143	1	Lined Shoe Kit
❷5:1		1	Lever-Operating
❷5:2		1	Pin
6	92-4147	1	Spring-Return, Shoe (Upper, LH)
7	92-4149	1	Spring-Return, Shoe (Lower)
8	92-4144	1	LH Adjuster ASM
❷8:1		1	Pushrod-Female
❷8:2		1	Bolt-Adjuster
❷8:3		1	Sleeve-Adjuster
9	92-4123	1	LH Pawl Lever ASM
❷9:1		1	Pin-Pawl

Ref	Part No.	Qty.	Description
10	92-4150	1	Spring-Adjuster, LH
11	92-4131	2	Washer-Hold Down, Shoe
12	92-4152	2	Spring-Hold Down, Shoe
13	92-4134	2	Plug-Inspection
14	92-4133	2	Pin-Hold Down, Shoe

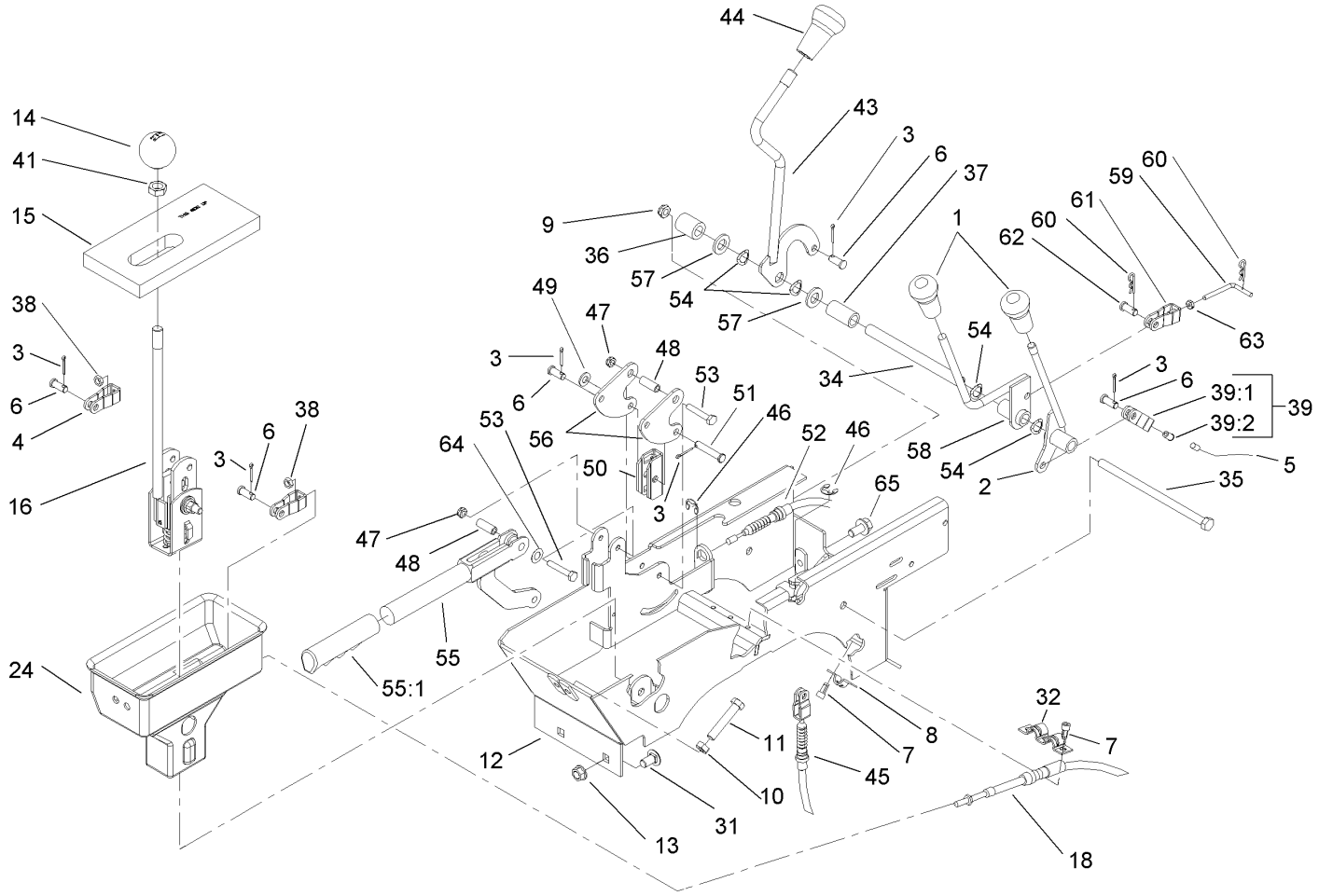

Console Assembly

Ref	Part No.	Qty.	Description
1	106-7903	2	Knob-Control
2	106-7828	1	Lever ASM
3	3272-6	6	Pin-Cotter
4	87-2310	2	Clevis-Cable
5	106-6698	1	Cable-Hi-Low
6	283-62	5	Pin-Clevis
7	65-5220	5	Screw-Forming, Thread
8	87-4340	1	Clamp-Cable
9	3296-59	1	Nut-Lock, NI
10	3217-7	2	Nut-Hex
11	323-10	2	Screw-HH
12	108-6914-03	1	Lever Support ASM
13	3290-357	2	Nut-HHF
14	87-6720	1	Knob-Shift
15	87-6570	1	Seal-Boot, Lower
16	106-7887	1	Shift ASM
18	87-4260	2	Cable-Selector, Gear
24	106-2376	1	Boot-Shift, Lower
31	3231-21	2	Screw-CARR
32	87-4960	1	Clamp-Cable
34	106-7833	1	Spacer
35	323-36	1	Screw-HH
36	66-6501	1	Spacer-Wheel
37	106-7835	1	Spacer

Ref	Part No.	Qty.	Description
38	3220-1	2	Nut-Jam
39	87-7160	1	Cable Clevis ASM
39:1	87-2310	1	Clevis-Cable
39:2	32148-15	1	Nut-Insert
41	3218-18	1	Nut-Jam
43	87-5030	1	Lever-Lock, Differential
44	106-7952	1	Knob
45	87-4460	1	Cable-Lock, Differential
46	32120-47	3	Ring-Retaining, External
47	3296-56	2	Nut-Lock, NI
48	114402	2	Spacer
49	3256-23	1	Washer-Flat
50	87-3480	1	Bracket-Equalizer, Cable
51	94-3829	1	Pin-Clevis
52	106-6691	2	Cable-Brake, Park
53	321-9	2	Screw-HH
54	3290-221	4	Washer-Spring
55	104-6842	1	Lever-Brake, Park
55:1	106-7972	1	Grip-Handle
56	106-7814	2	Bellcrank
57	33096-00	2	Washer-Flat
58	106-7960	1	HYD Lever ASM
59	107-8000	1	Rod-Link
60	3290-307	2	Pin-Hair

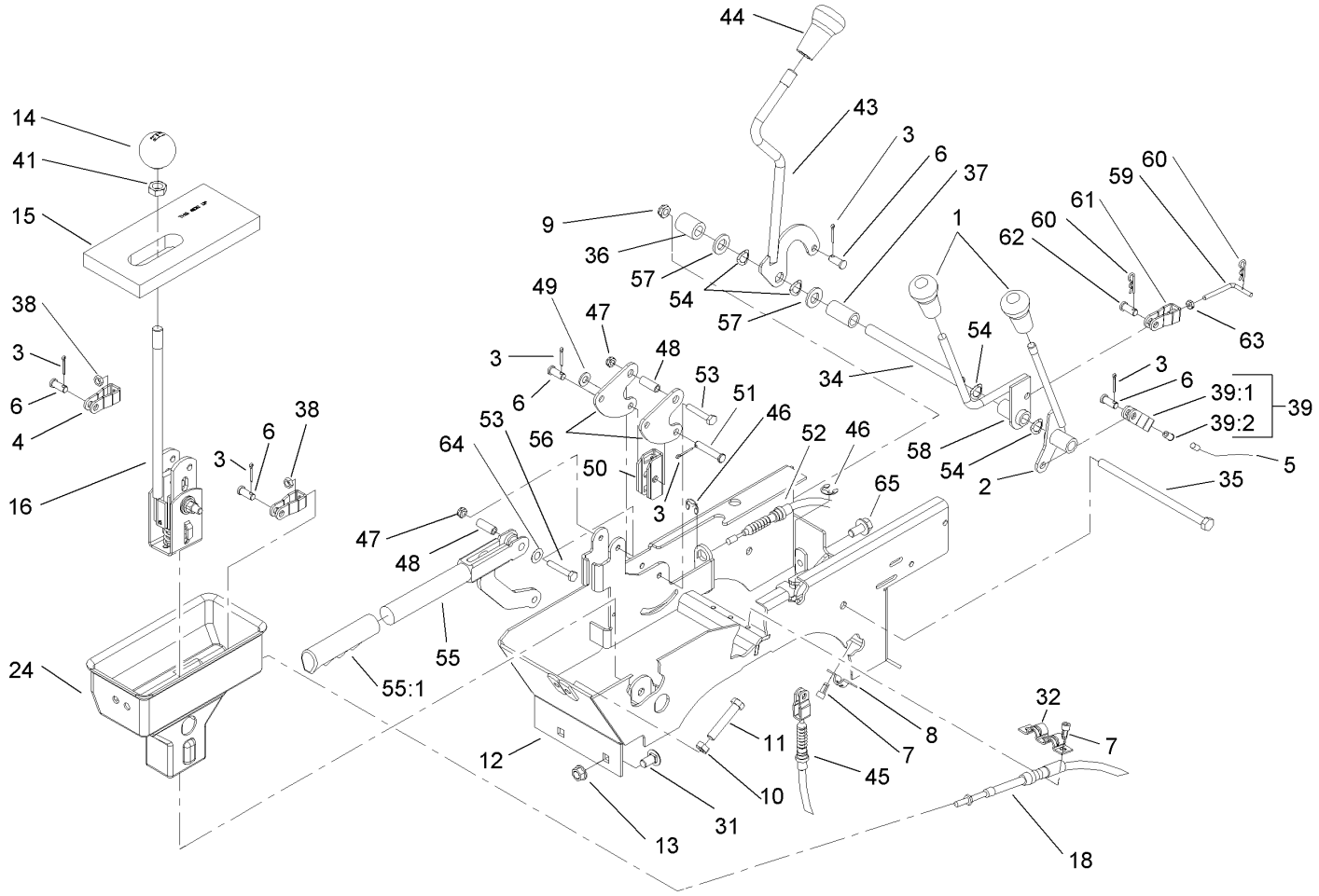

Console Assembly (continued)

Ref	Part No.	Qty.	Description
61	107-7966	1	Clevis ASM
62	283-62	1	Pin-Clevis
63	3219-14	1	Nut-Hex
64	3290-477	1	Washer-Curved
65	3234-12	2	Screw-HHF

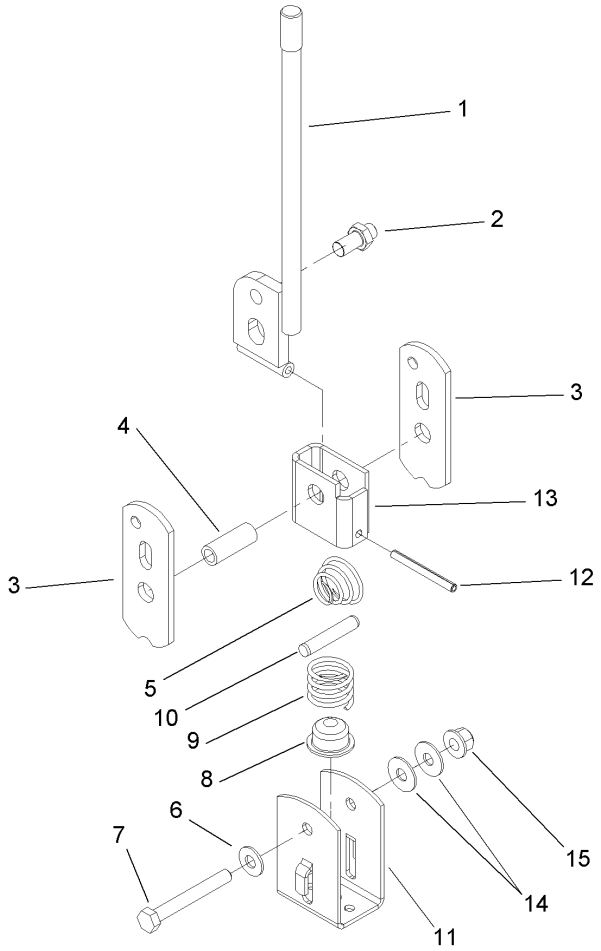

Shift Assembly No. 106-7887

Ref	Part No.	Qty.	Description
1	87-2040	1	Shift Lever ASM
2	87-3650	1	Pin-Shift
3	87-3540	2	Link-Shift
4	87-2520	1	Tube-Pivot
5	87-2900	1	Spring-Compression
6	87-8640	1	Washer-Flat
7	322-12	1	Screw-HH
8	87-3530	1	Button-Shifter
9	87-3660	1	Spring-Compression
10	3290-507	1	Pin-Dowel
11	87-3520	1	Clevis
12	32121-48	1	Pin-Spring
13	87-6040	1	Bracket-Shifter
14	3290-456	2	Washer-Belleville
15	3296-58	1	Nut-Lock NI

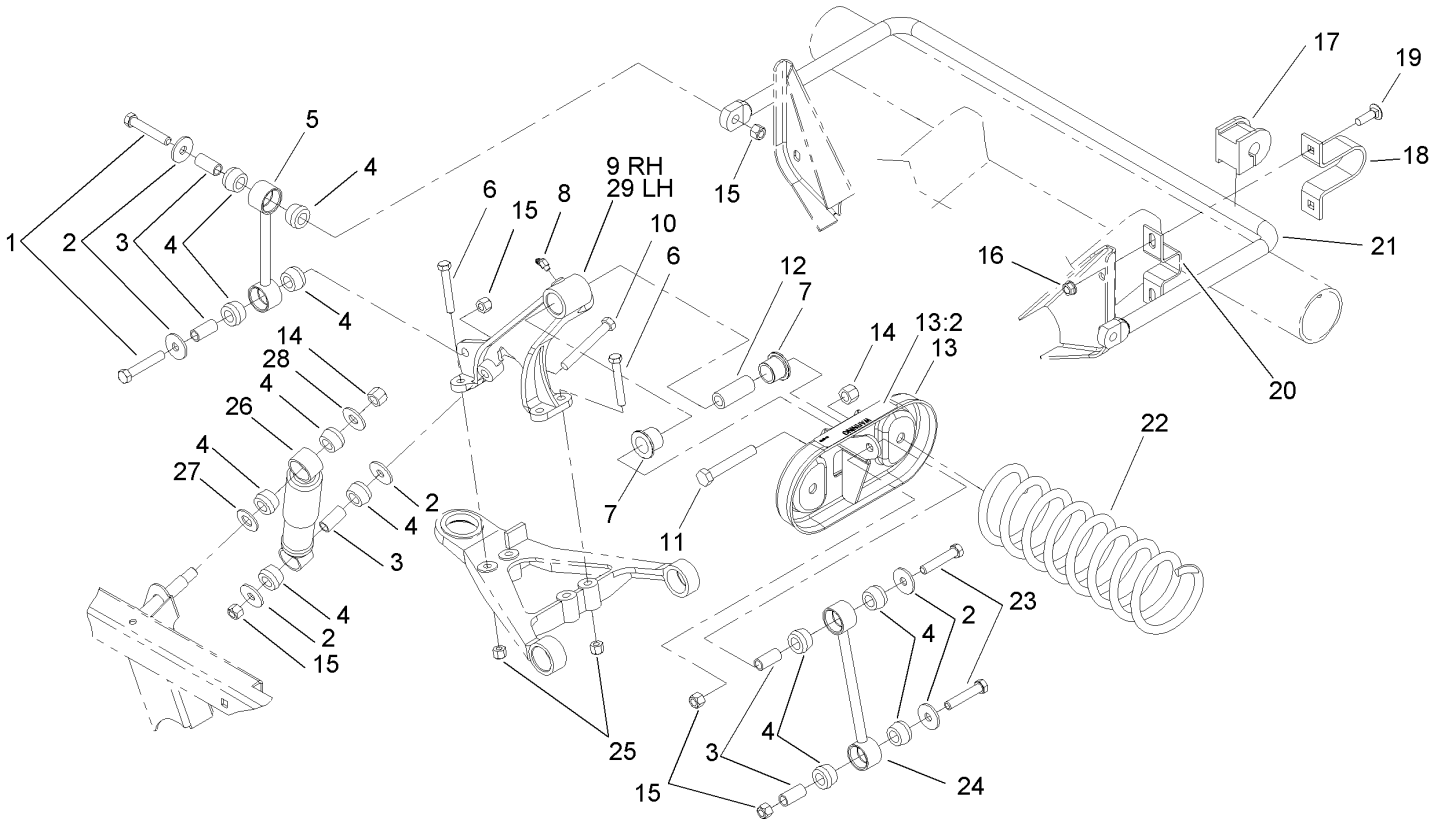

Front Suspension Assembly

Ref	Part No.	Qty.	Description
1	324-10	4	Screw-HH
2	87-5330	12	Washer
3	87-3600	10	Spacer-Absorber, Shock
4	87-3920	24	Bushing
5	87-3860-03	2	Anti-Sway Bar Link ASM
6	323-12	8	Screw-HH
7	33-3090	4	Bushing
8	302-11	2	Fitting-Lube, 45 DEG
9	87-0150-03	1	Tower-Control Arm, RH
10	324-13	2	Screw-HH
11	325-13	2	Screw-HH
12	87-2500	2	Sleeve-Spring, Pivot
13	105-7958	2	Spring Cradle ASM
13:2	93-9879	1	Decal-Warning
14	3296-23	4	Nut-Lock, NI
15	3296-48	10	Nut-Lock, NI
16	3290-357	4	Nut-HHF
17	87-3910	2	Bushing-Rubber
18	87-4010-03	2	Clamp-Bar, Sway
19	3231-25	4	Screw-CARR
20	87-3890-03	2	Bracket-Bar, Sway
21	87-3850-03	1	Bar-Sway, Anti
22	105-4183-01	2	Spring-Compression
23	324-9	4	Screw-HH

Ref	Part No.	Qty.	Description
24	106-2302-03	2	Stabilizer Link ASM
25	3296-39	8	Nut-Lock, NI
26	87-3110	2	Absorber-Shock
27	3256-27	2	Washer-Flat
28	3256-6	2	Washer-Flat
29	87-0160-03	1	Tower-Control Arm, LH

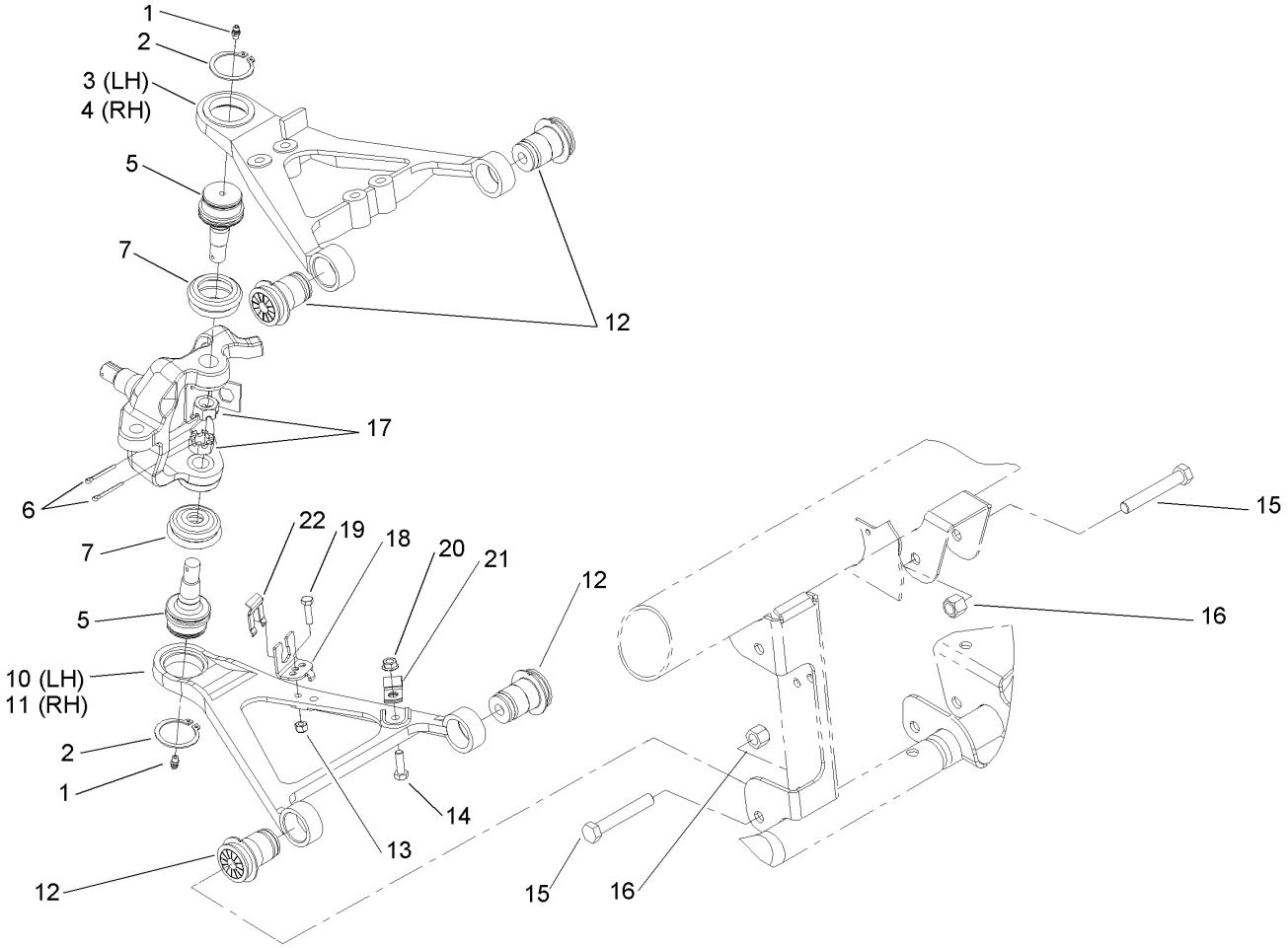

Front Control Arm Assembly

Ref	Part No.	Qty.	Description
1	302-5	4	Fitting-Grease
2	32151-104	4	Ring-Retaining, External
3	93-7135-03	1	Control Arm-Top, RH
4	93-7133-03	1	Control Arm-Top, LH
5	87-1430	4	Joint-Ball
6	3272-12	4	Pin-Cotter
7	87-2420	4	Seal-Joint, Ball
10	87-0210-03	1	Control Arm-Lower, RH
11	87-0220-03	1	Control Arm-Lower, LH
12	87-1450	8	Bushing-Flange
13	3296-42	2	Nut-Lock, NI
14	322-5	2	Screw-HH
15	325-14	8	Screw-HH
16	3296-23	8	Nut-Lock, NI
17	32136-2	4	Nut-SHH
18	93-7070	2	Bracket-Hose, Brake
19	321-6	2	Screw-HH
20	32128-20	2	Nut-HF
21	2412-10	2	R-Clamp
22	87-3580	2	Clip-Retainer

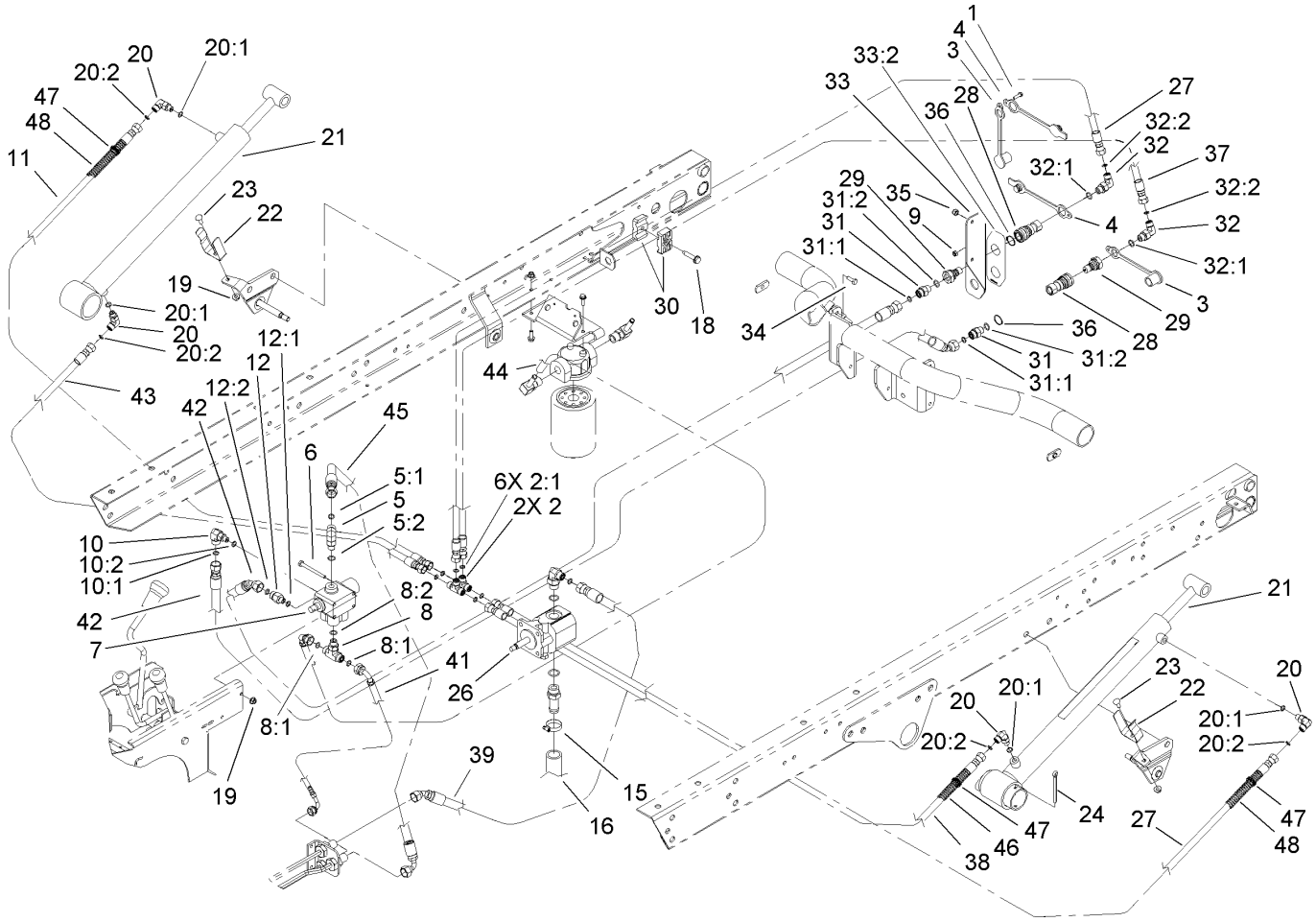

Lift Valve and Hydraulic Assembly

Ref	Part No.	Qty.	Description
1	32105-13	1	Screw-SHH
2	340-21	2	Fitting
2:1	237-21	3	O-Ring
3	106-7881	2	Cap-Dust, HYD
4	106-7882	2	Plug-Dust, HYD
5	340-77	1	Fitting-HYD, 90 DEG
5:1	237-22	1	O-Ring
5:2	237-42	1	O-Ring
6	321-14	2	Screw-HH
7	43-1950	1	Valve-Control, HYD
8	340-94	1	Adapter
8:1	237-22	2	O-Ring
8:2	237-42	1	O-Ring
9	3296-2	1	Nut-Lock
10	340-97	1	Fitting-HYD, 90 DEG
10:1	237-22	1	O-Ring
10:2	237-78	1	O-Ring
11	92-7564	1	Hose ASM
12	340-88	1	Adapter
12:1	237-22	1	O-Ring
12:2	237-78	1	O-Ring
15	2412-34	1	Clamp-Hose
16	87-8030	1	Hose-Suction
18	32144-57	1	Screw

Ref	Part No.	Qty.	Description
19	32128-33	4	Nut-HF
20	340-132	4	Fitting-HYD, 90 DEG
20:1	237-78	1	O-Ring
20:2	237-21	1	O-Ring
21	106-7939	2	HYD Cylinder ASM
22	87-3720	2	Retainer-Cylinder
23	3229-1	2	Screw-CARR
24	3272-37	2	Pin-Cotter
26	106-6649	1	Pump-Gear, HYD
27	104-3716	2	HYD Hose ASM
28	106-7968	2	Coupler-Quick, Female
29	106-7969	2	Coupler-Quick, Male
30	56-7976	2	Clamp-Tube
31	340-2	2	Fitting-HYD, Straight
31:1	237-22	1	O-Ring
31:2	237-42	1	O-Ring
32	340-82	2	Adapter
32:1	237-42	1	O-Ring
32:2	237-21	1	O-Ring
33	106-7923	1	Quick Coupler Bracket ASM
33:2	106-7888	1	Decal-Couplers, Quick
34	3234-21	2	Screw-Cap
35	3296-42	2	Nut-Lock, NI
36	32151-83	2	Ring-Snap

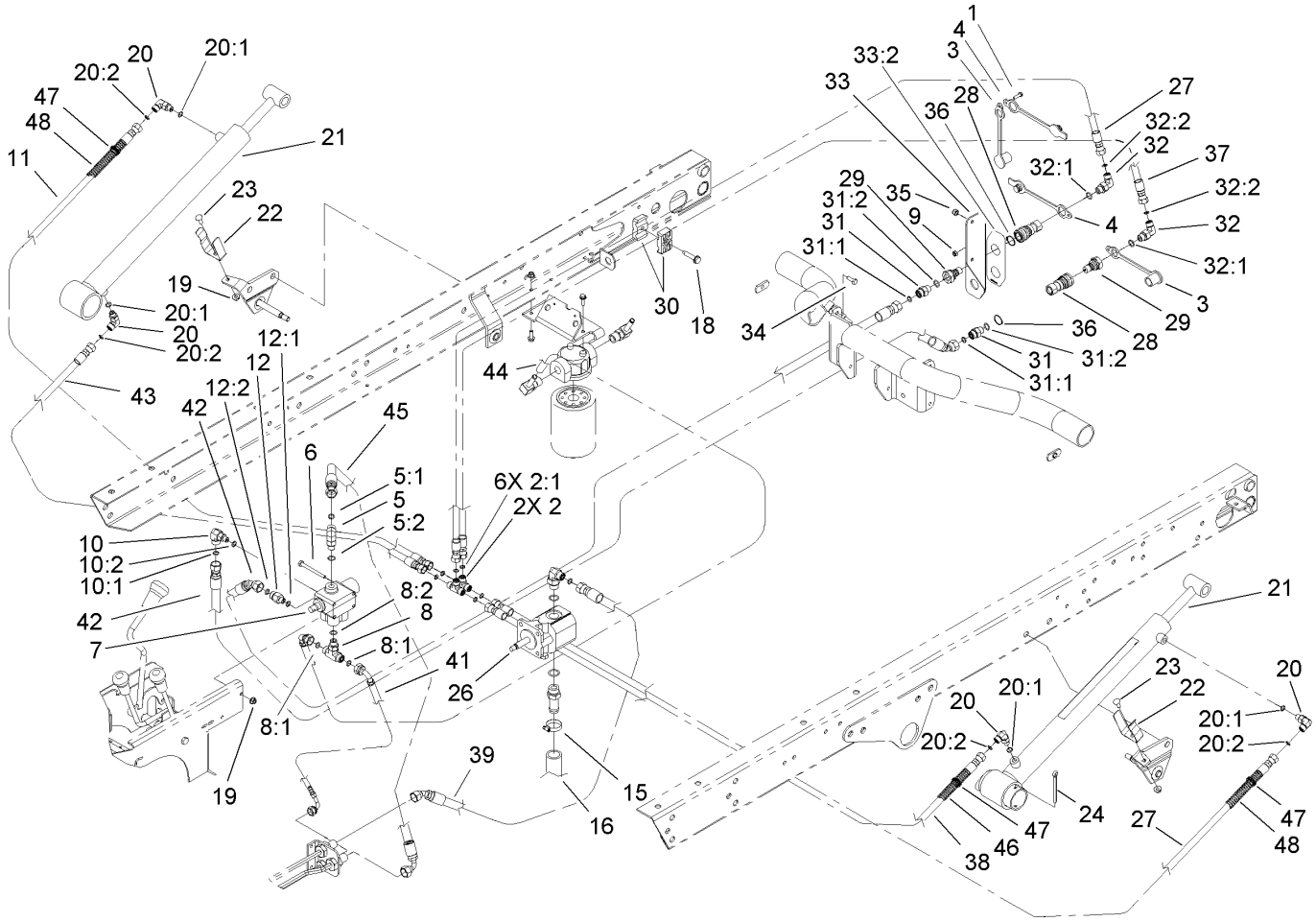

Lift Valve and Hydraulic Assembly (continued)

Ref	Part No.	Qty.	Description
37	98-4584	1	HYD Hose ASM
38	98-4590	1	Hydraulic Hose ASM
39	95-0965	1	Hose ASM
41	106-7964	1	Hose-HYD
42	106-7977	2	Hose-HYD
43	106-7981	1	Hose-HYD
44	106-7965	1	Hose-HYD
45	95-8828	1	Hose-HYD
46	24-7922	1	Cover-Shaft, Drive
47	3290-378	6	Tie-Cable
48	24-7923	2	Cover-Shaft, Drive

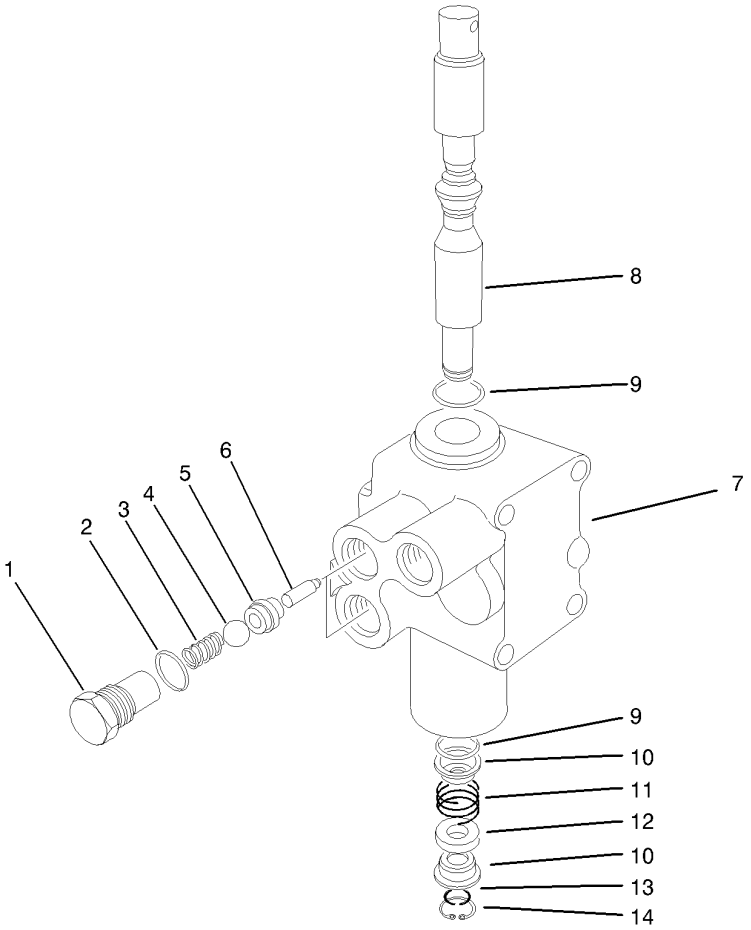

Hydraulic Valve Assembly No. 43-1950

Ref	Part No.	Qty.	Description
1	22-8330	2	Plug
2	237-42	2	O-Ring
3	22-8340	2	Spring
4	22-8350	2	Ball
5	22-8370	2	Seat-Valve
6	22-8360	2	Pin
❷7		1	Body
8	22-8420	1	Spool
9	22-8500	2	O-Ring
10	22-8380	2	Retainer
11	22-8410	1	Spring
12	23-3030	1	Spacer
13	22-8480	1	Ring-Snap
14	22-8490	1	Ring-Snap

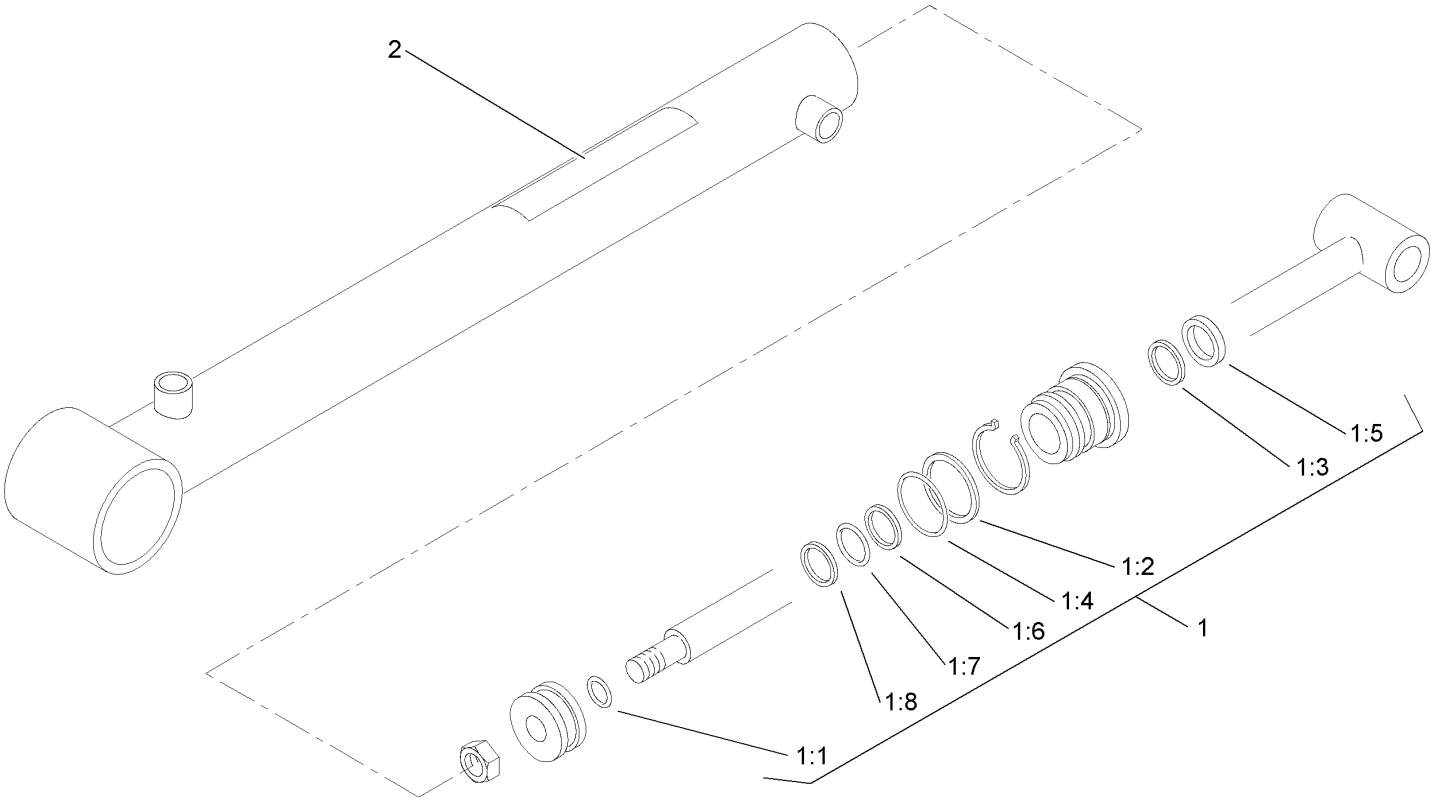

Hydraulic Cylinder Assembly No. 106-7939

Ref	Part No.	Qty.	Description
1	106-7941	1	Seal Kit
❷1:1		1	O-Ring
❷1:2		1	O-Ring
❷1:3		1	Seal
❷1:4		1	Back-Up
❷1:5		1	Wiper
❷1:6		1	Seal
❷1:7		1	O-Ring
❷1:8		1	Ring-Wear
2	93-9852	1	Decal-Warning

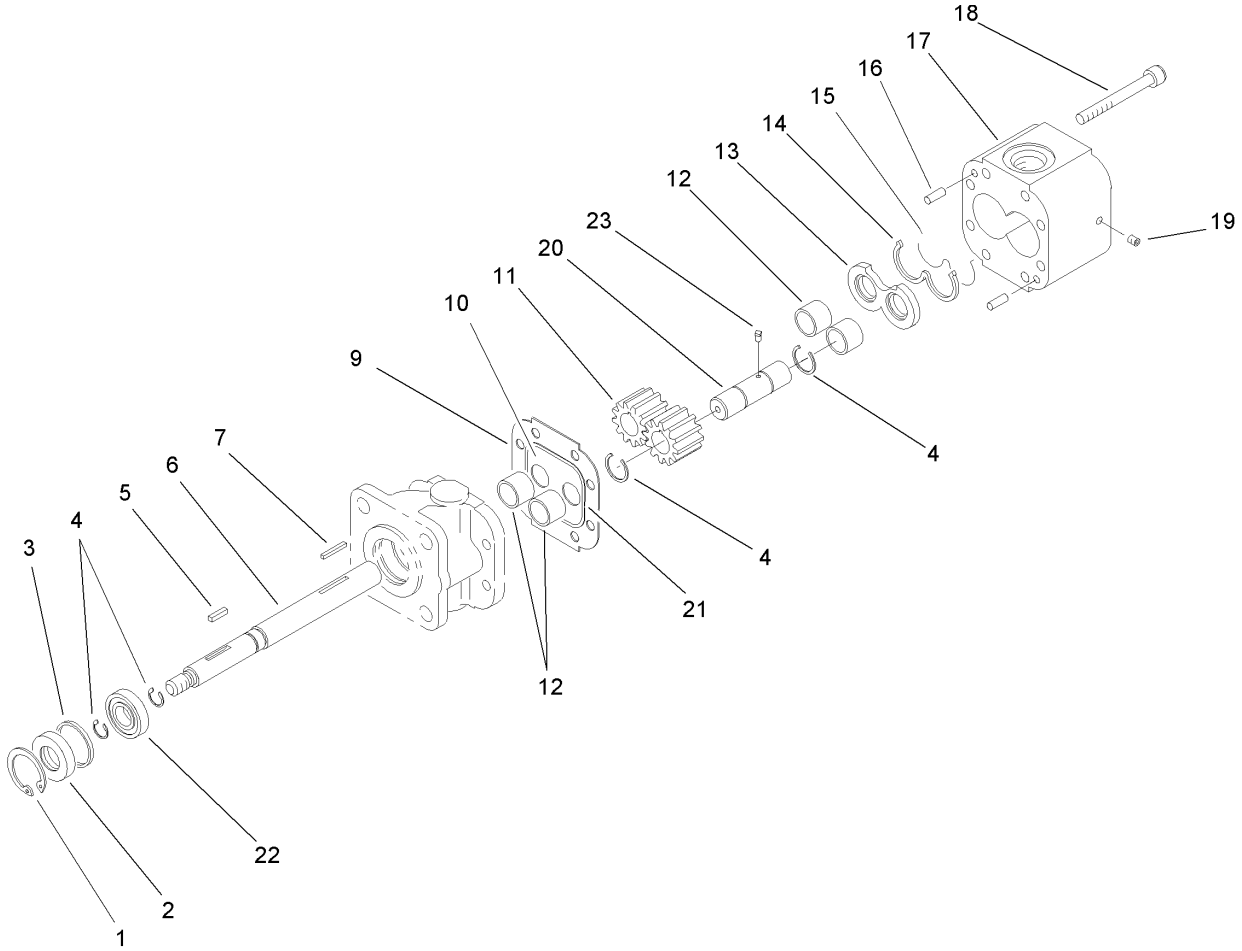

Hydraulic Pump Assembly No. 106-6649

Ref	Part No.	Qty.	Description
1	32151-41	1	Ring-Snap
2	92-2195	1	Seal-Oil
3	92-2186	1	Spacer
4	92-2178	4	Ring-Crescent
5	92-2179	1	Key-Square
6	92-2189	1	Shaft-Drive
7	92-2177	1	Pin-Shear
9	92-2182	1	Plate-Seal
10	92-2183	1	Plate-Wear
11	92-2175	2	Gear
12	92-2192	4	Bearing
13	92-2181	1	Plate-Pressure
14	92-2197	1	Seal-Back Up, Pressure Plate
15	92-2196	1	Seal-Plate, Pressure
16	92-2176	2	Pin-Shear
17	92-2187	1	Housing-Gear, End
18	92-2173	4	Screw
19	92-2185	1	Plug
20	92-2190	1	Shaft-Idler
21	92-2198	1	Seal-Plate, Wear
22	92-2191	1	Bearing-Ball
23	92-2199	1	Key-Ball

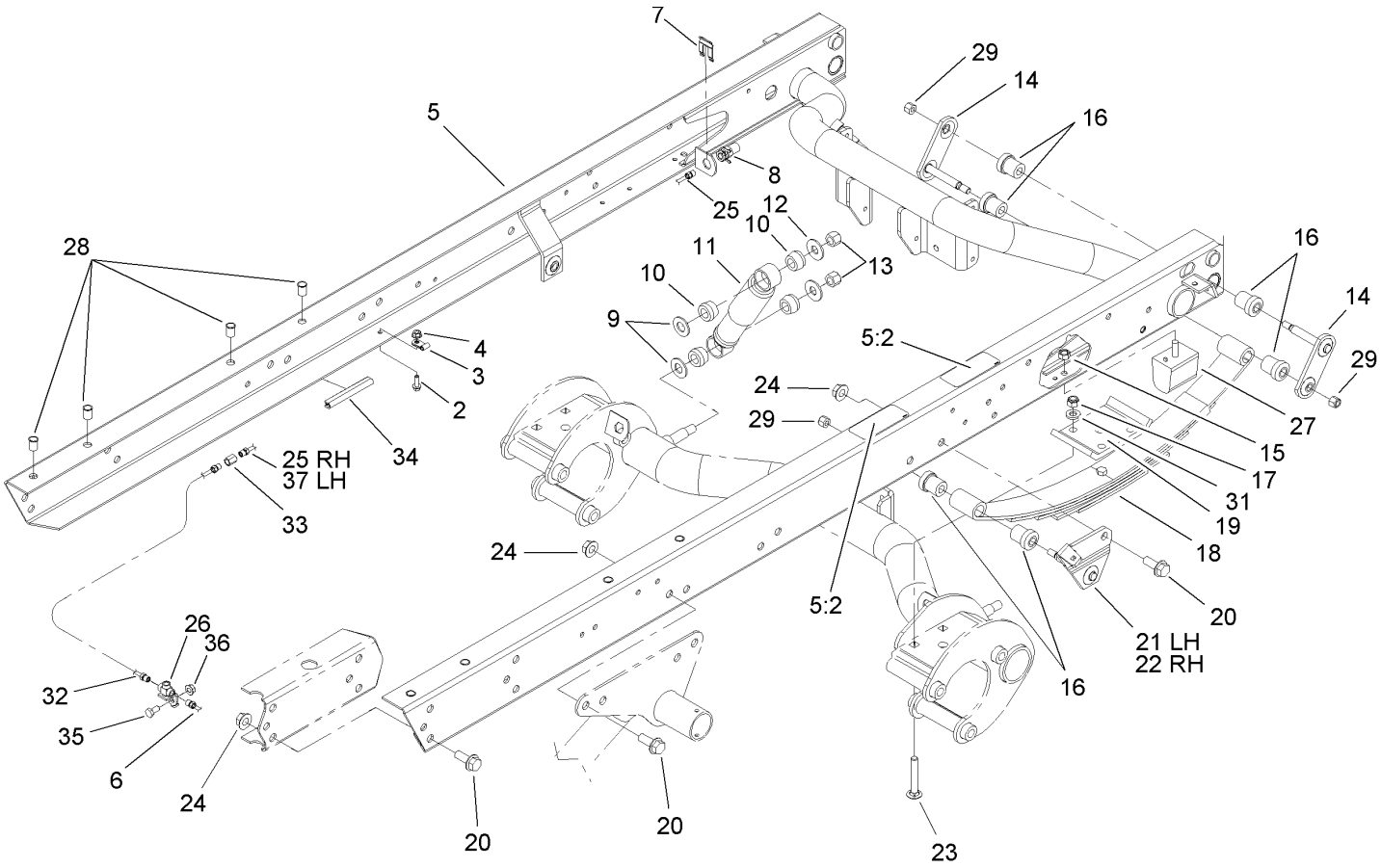

Rear Frame Assembly

Ref	Part No.	Qty.	Description
2	3234-4	4	Screw-HHF
3	2412-149	4	Clamp-Hose
4	32128-33	4	Nut-HF
5	105-7959	1	Frame Channel ASM
5:2	93-8071	2	Decal-Surface, Hot
6	94-3843	1	LH Rear Brake Tube ASM
7	87-3580	2	Clip-Retainer
8	87-4100	2	Hose-Brake, Rear
9	3256-27	4	Washer-Flat
10	87-3920	8	Bushing
11	87-3110	2	Absorber-Shock
12	3256-6	4	Washer-Flat
13	3296-23	4	Nut-Lock, NI
14	87-3980	4	Shackle ASM
15	48-9520	2	Nut
16	87-4760	12	Bushing-Rubber
17	3296-76	8	Nut-Lock, NI
18	87-1490	2	Spring-Leaf, Rear
19	87-7470-03	2	Plate-Spring, Clamp
20	3234-38	24	Screw-HHF
21	87-3960	1	LH Spring Mount ASM
22	87-3940	1	RH Spring Mount ASM
23	3232-17	8	Screw-CARR
24	32128-23	24	Nut-HF

Ref	Part No.	Qty.	Description
25	94-3846	1	RH Rear Brake Tube ASM
26	87-3560	1	Tee
27	87-3470	2	Bumper-Axle, Rear
28	32148-9	8	Insert-Nut
29	3296-39	6	Nut-Lock, NI
31	87-7480	8	Washer
32	94-3845	1	RH Rear Brake Tube ASM
33	87-3570	2	Union
34	43-4300	1	Trim-Frame, Rear
35	322-2	1	Screw-HH
36	32128-20	1	Nut-HF
37	94-3844	1	LH Rear Brake Tube ASM

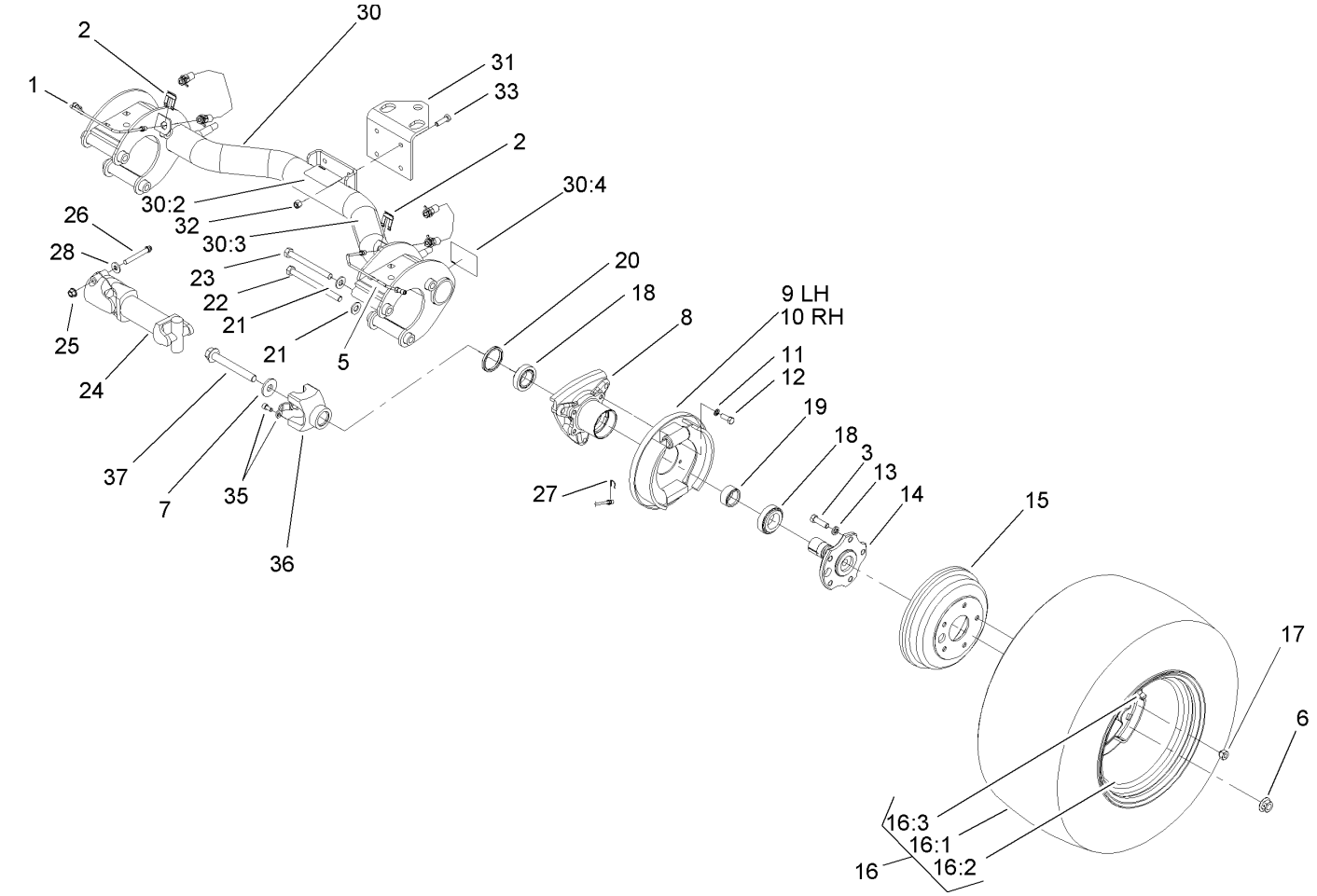

Rear Axle Assembly

Ref	Part No.	Qty.	Description
1	87-4090	1	RH Rear Brake Tube ASM
2	87-3580	2	Clip-Retainer
3	87-2080	10	Bolt-Hex, TAP
5	87-4080	1	LH Rear Brake Tube ASM
6	105-1764	2	Nut-Flange, Side Lock
7	104-9216	2	Washer-Hardened
8	87-2240	2	Housing-Axle
9	93-7126	1	LH Rear Brake ASM
10	93-7125	1	RH Rear Brake ASM
11	3253-21	8	Washer-Lock
12	323-6	8	Screw-HH
13	3253-6	10	Washer-Lock
14	105-1717-03	2	Axle-Stub
15	93-7128	2	Drum-Brake
❷16		2	Tire And Wheel ASM
16:1	106-7868	1	Tire
16:2	87-6750	1	Wheel
16:3	232-27	1	Stem-Valve
17	23-7270	10	Nut-Wheel
18	87-1970	2	Bearing
19	87-4060	2	Spacer-Bearing, Wheel
20	87-3590	2	Seal-Bearing
21	87-7270	6	Washer-Thrust
22	325-20	5	Screw-HH

Ref	Part No.	Qty.	Description
23	325-19	1	Screw-HH
24	98-2918	2	Driveshaft ASM
25	32128-36	4	Nut-HF
26	98-2939	4	Screw-Cap
27	87-3310	2	Clip-Cable, Brake
28	80-6990	4	Washer-Hardened
30	105-7961	1	Rear Axle ASM
30:2	93-9442	1	Decal-Atf
30:3	93-9862	1	Decal-Danger
30:4	93-9449	2	Decal-Driveshaft
31	92-5951-03	1	Angle-Hitch
32	3296-39	4	Nut-Lock, NI
33	323-7	4	Screw-HH
35	92-4189	2	Strap Kit
36	92-4190	2	Yoke
37	105-1763	2	Screw-Hfh

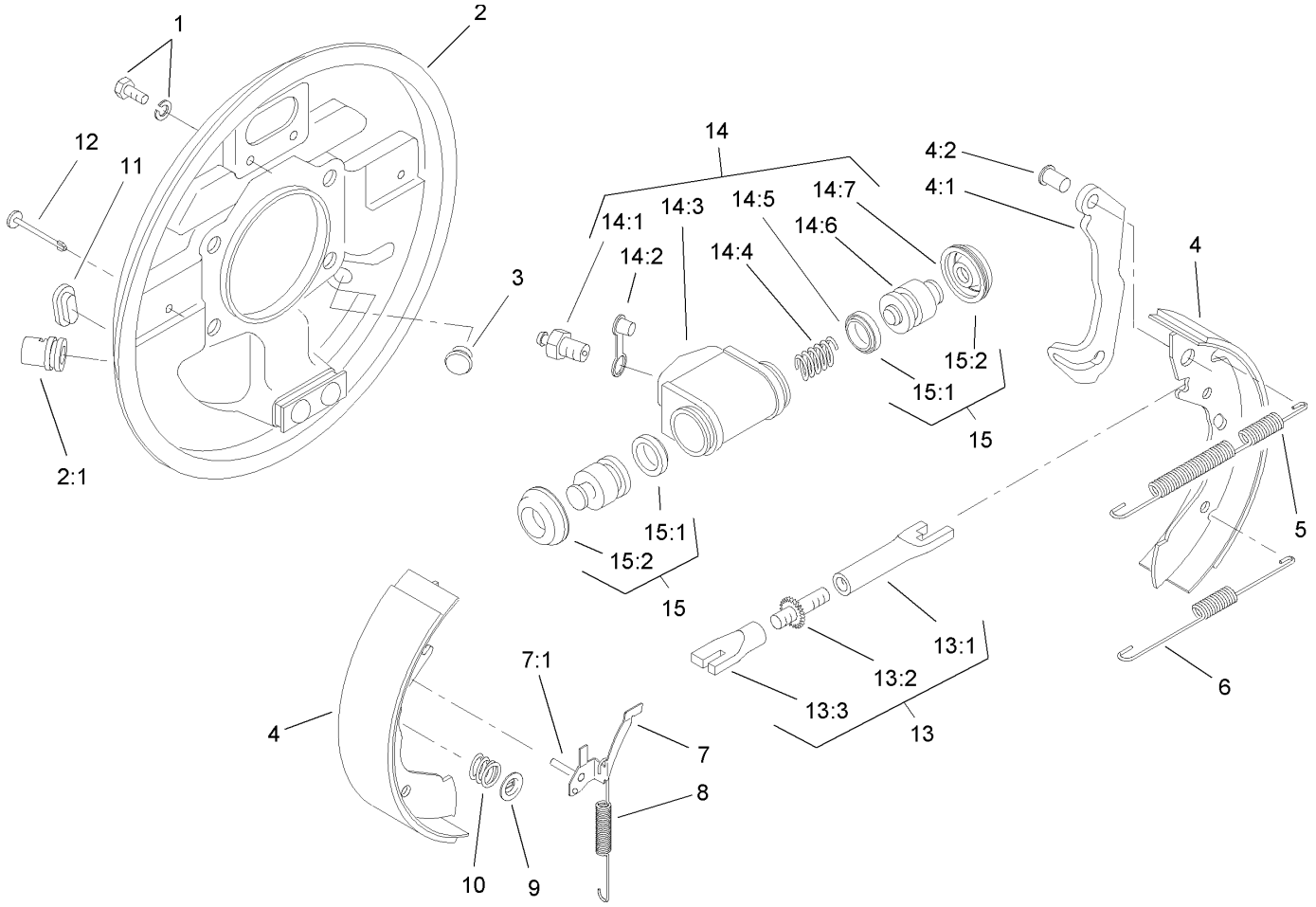

Rear Brake Assembly
No. 93-7125 (Right) and 93-7126 (Left)

Ref	Part No.	Qty.	Description
1	92-4135	2	Bolt-Set
2	92-4100	1	RH Backplate ASM
2	92-4136	1	LH Backplate ASM
❷2:1		1	Guide-Pipe
3	92-4146	1	Plunger ASM
4	92-4143	1	Lined Shoe Kit
❷4:1		1	Lever-Operating
❷4:2		1	Pin
5	92-4147	1	Spring-Return, Shoe (Upper, LH)
5	92-4148	1	Spring-Return, Shoe (Upper, RH)
6	92-4149	1	Spring-Return, Shoe (Lower)
7	92-4124	1	RH Pawl Lever ASM
7	92-4123	1	LH Pawl Lever ASM
❷7:1		1	Pin-Pawl
8	92-4150	1	Spring-Adjuster, LH
8	92-4151	1	Spring-Adjuster, RH
9	92-4131	2	Washer-Hold Down, Shoe
10	92-4152	2	Spring-Hold Down, Shoe
11	92-4134	1	Plug-Inspection
12	92-4133	2	Pin-Hold Down, Shoe
13	92-4145	1	RH Adjustor ASM
13	92-4144	1	LH Adjuster ASM
❷13:1		1	Pushrod-Female
❷13:2		1	Bolt-Adjuster

Ref	Part No.	Qty.	Description
❷13:3		1	Sleeve-Adjuster
14	92-4141	1	RH Wheel Cylinder ASM
14	92-4140	1	LH Wheel Cylinder ASM
14:1	92-4137	1	Screw-Bleed
14:2	92-4114	1	Cap-Screw, Bleed
❷14:3		1	Body
❷14:4		1	Spring
❷14:5		2	Seal-L Type
❷14:6		2	Piston
❷14:7		2	Cover-Dust
15	92-4142	1	Seal Kit
❷15:1		2	Seal-L Type
❷15:2		2	Cover-Dust

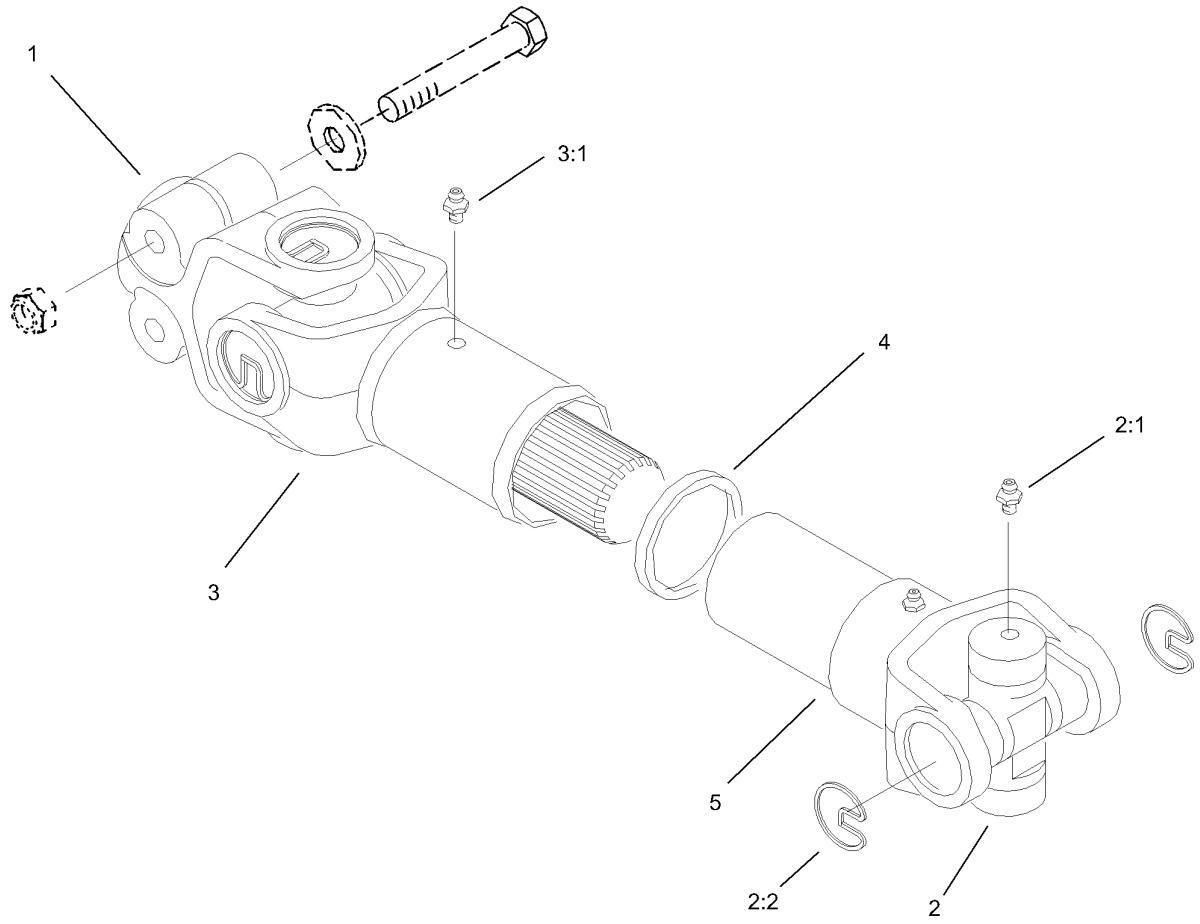

Driveshaft Assembly No. 98-2918

Ref	Part No.	Qty.	Description
1	98-2940	1	Yoke
2	92-4187	2	Cross And Bearing Kit
2:1	302-58	2	Fitting-Grease
2:2	92-4188	2	Ring-Snap
3	92-4179	1	Yoke-Tube, Shaft And Seal
3:1	302-5	1	Fitting-Grease
4	92-4180	1	Seal
5	92-4182	1	Yoke And Hub

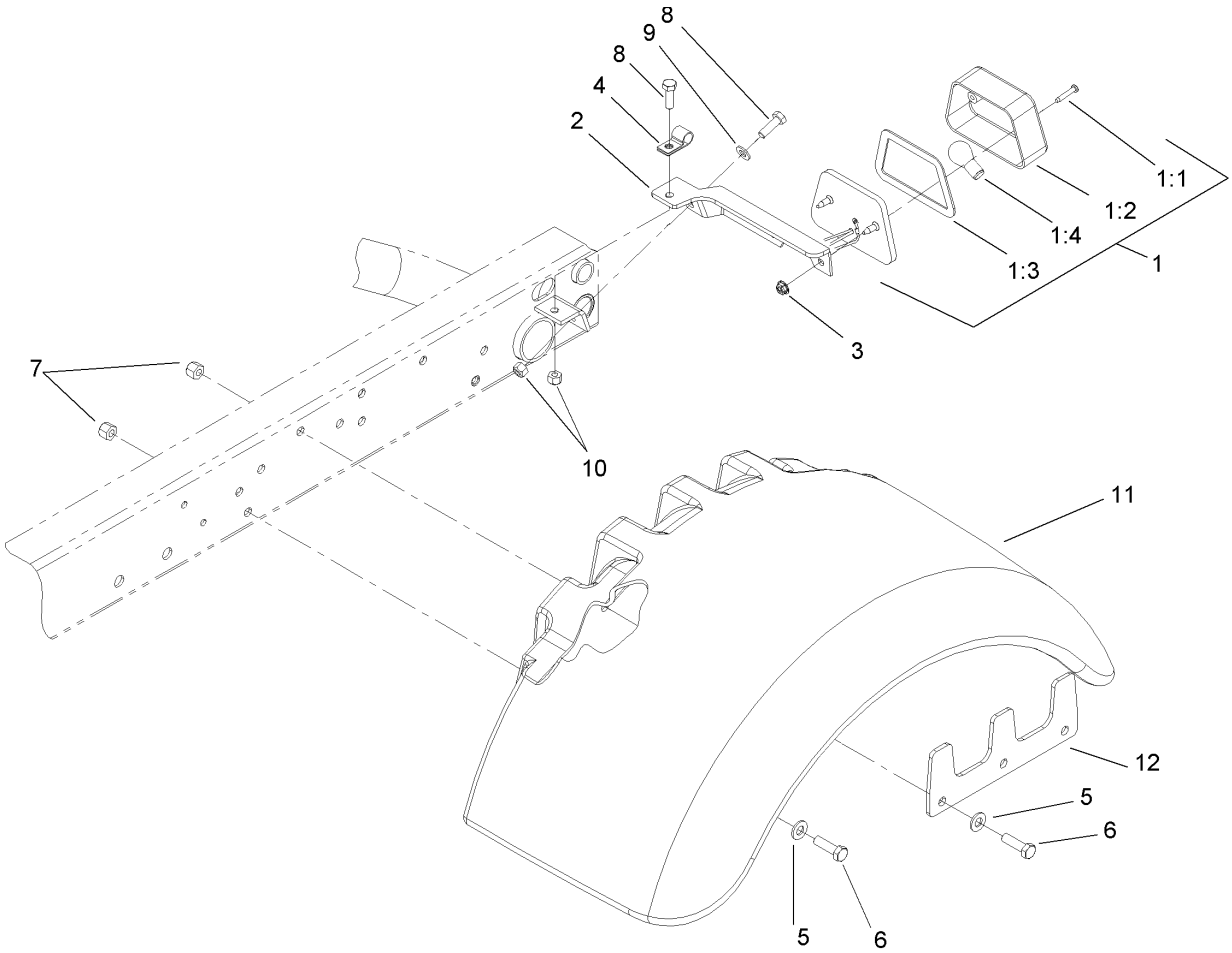

Tail Light and Fender Assembly

Ref	Part No.	Qty.	Description
1	87-2110	1	Light-Tail / Brake
1:1	32144-93	4	Screw-PPHTF
1:2	87-6300	2	Lens-Light, Tail
1:3	87-6310	2	Gasket-Light, Tail
❷1:4		1	Bulb
2	106-7872-03	1	LH Tail Light Bracket ASM
3	3290-506	2	Palnut
4	2412-93	1	Clamp-R
5	3256-24	10	Washer-Flat
6	323-7	10	Screw-HH
7	3296-39	8	Nut-Lock, NI
8	322-5	2	Screw-HH
9	3256-23	1	Washer-Flat
10	3296-29	2	Nut-Lock, NI
11	106-2373	2	Fender-Rear
12	106-7895-03	2	Plate-Support

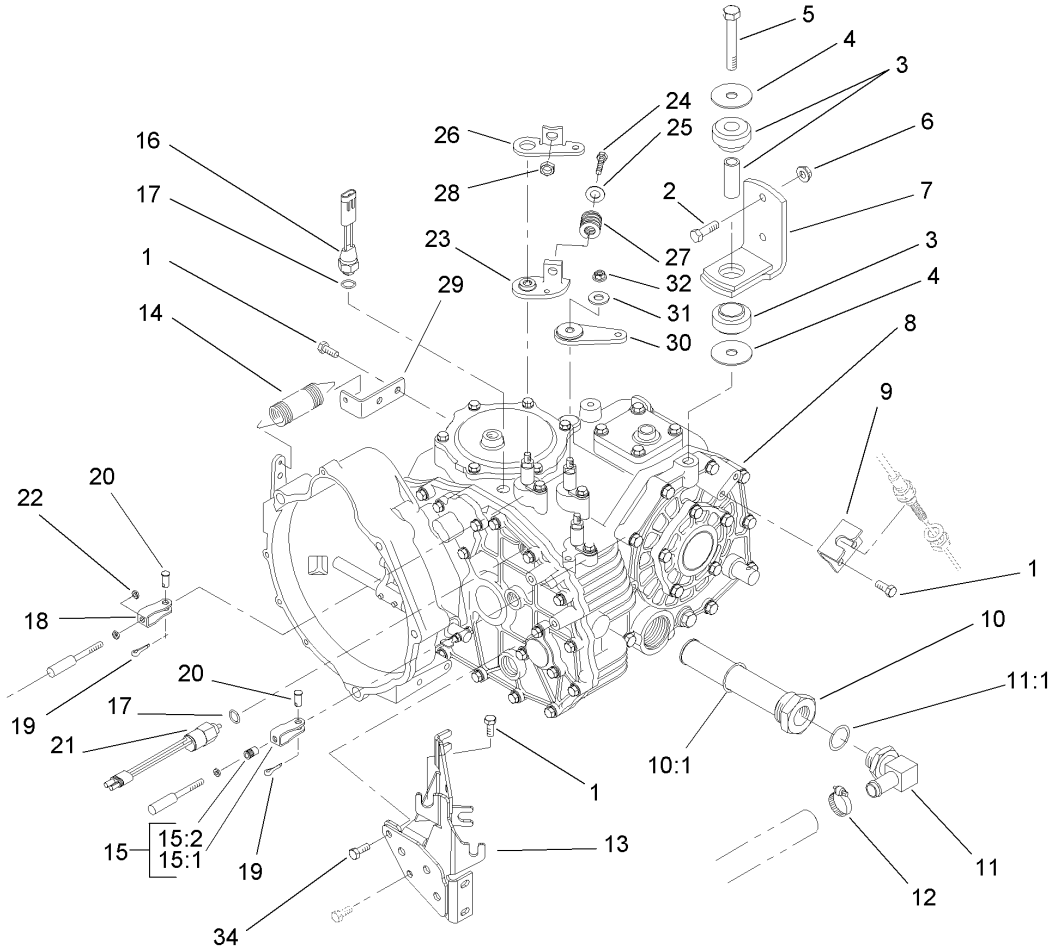

Transaxle Assembly

Ref	Part No.	Qty.	Description
1	33114-020	5	Screw-HH
2	323-7	4	Screw-HH
3	106-7865	2	Engine Mount ASM
4	87-5100	4	Washer-Snubbing
5	33116-080	2	Screw-HH
6	3296-39	4	Nut-Lock, NI
7	87-5800-03	2	Transaxle Mount ASM
8	105-4180	1	2Wd Transaxle ASM
9	87-4470	1	Bracket-Lock, Differential
10	87-3990	1	Strainer-Transaxle
10:1	237-123	1	O-Ring
11	353-987	1	Fitting-HYD, 90 DEG
11:1	237-81	1	O-Ring
12	2412-34	1	Clamp-Hose
13	105-4207-03	1	Cable Mount ASM
14	68-9950	1	Spring-Traction
15	87-7160	1	Cable Clevis ASM
15:1	87-2310	1	Clevis-Cable
15:2	32148-15	1	Nut-Insert
16	72-4310	1	Switch-Ball
17	237-30	2	O-Ring
18	87-2310	2	Clevis-Cable
19	3272-6	3	Pin-Cotter
20	283-62	3	Pin-Clevis

Ref	Part No.	Qty.	Description
21	87-6710	1	Switch-Transmission
22	3220-1	2	Nut-Jam
23	87-7970	1	Arm-Shift
24	323-10	1	Screw-HH
25	3256-4	1	Washer-Flat
26	87-8250	1	Plate-Arm, Shift
27	87-6910	1	Spring-Compression
28	32128-21	1	Nut-HF
29	87-7170	1	Bracket-Spring, Clutch
30	87-7960	2	Lever-Shift
31	80-6990	3	Washer-Hardened
32	48-9520	3	Nut
34	33114-025	1	Screw-HH

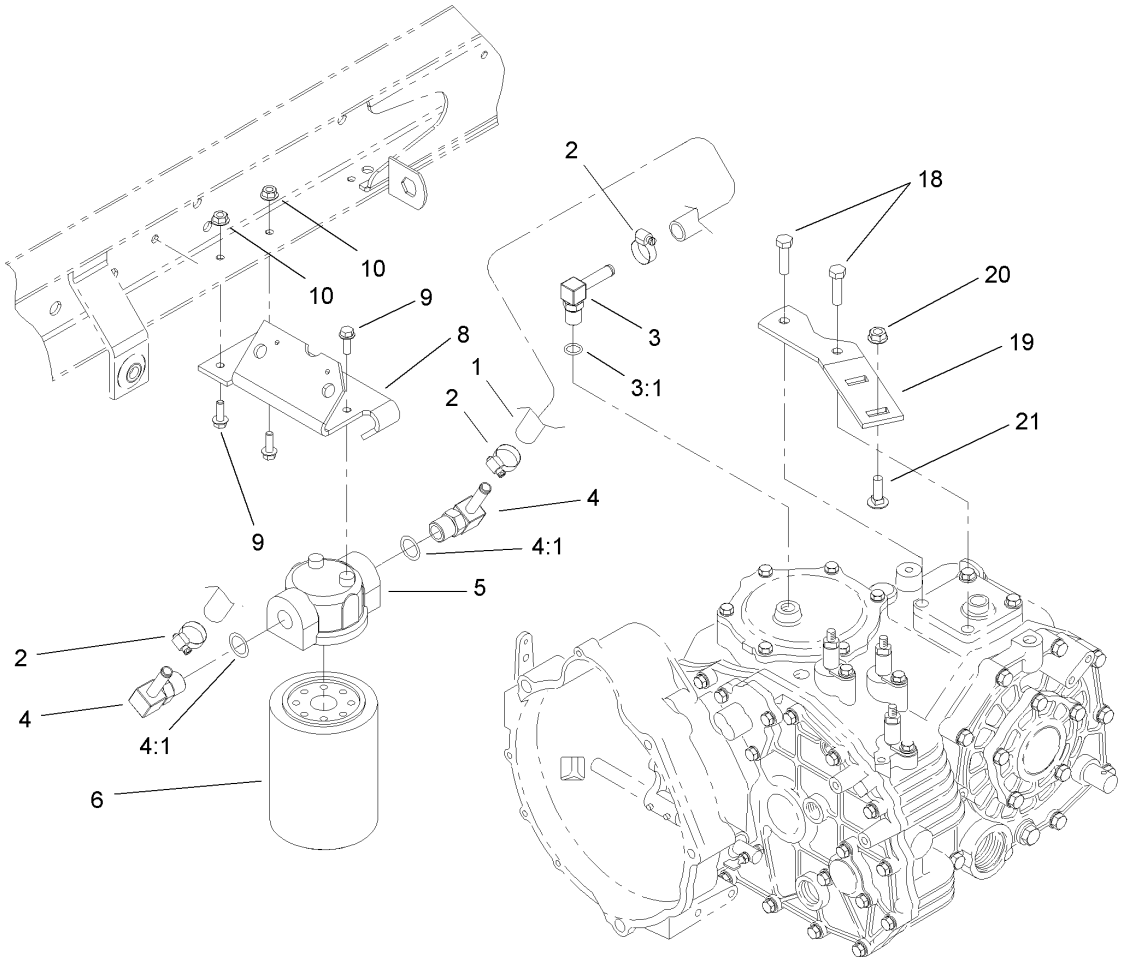

Hydraulic Filter and Relay Assembly

Ref	Part No.	Qty.	Description
1	87-5730	1	Hose
2	2412-36	3	Clamp-Hose
3	354-135	1	Fitting-HYD, 90 DEG
3:1	237-42	1	O-Ring
4	354-134	2	Fitting-HYD, 90 DEG
4:1	237-79	1	O-Ring
5	87-8780	1	Head-Filter
6	54-0110	1	Filter-Oil, Transmission
8	105-4199	1	Bracket-Mount, Filter
9	3234-4	3	Screw-HHF
10	32128-33	2	Nut-HF
18	33114-030	2	Screw-HH
19	105-9472	1	Plate-Mount, Muffler
20	32128-20	2	Nut-HF
21	3230-2	2	Bolt-CARR

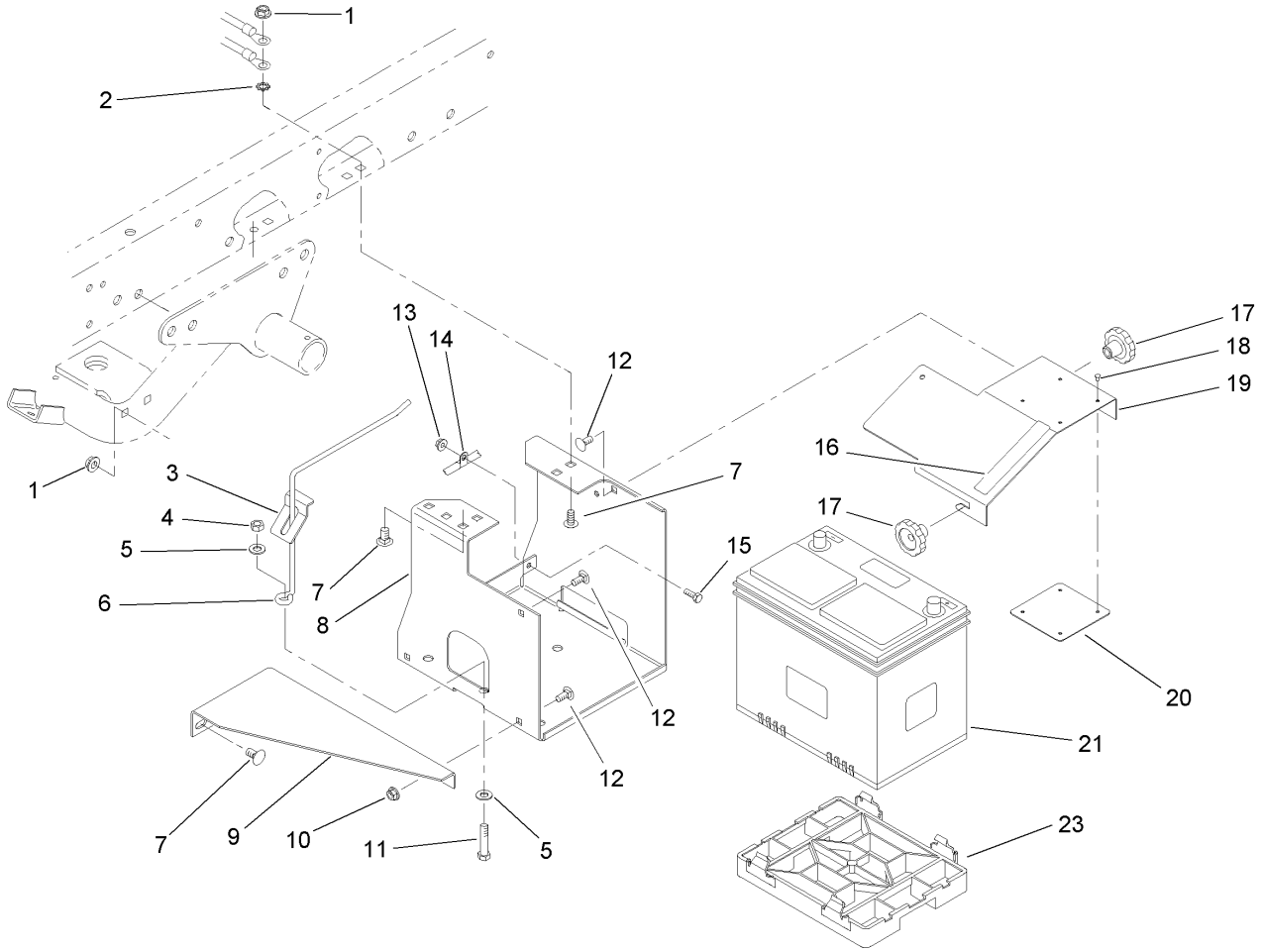

Battery Assembly

Ref	Part No.	Qty.	Description
1	3290-357	6	Nut-HHF
2	3255-9	1	Washer-Lock, EXT
3	87-7610	1	Tab-Support, Battery
4	3296-39	1	Nut-Lock, NI
5	3256-24	2	Washer-Flat
6	87-7600	1	Rod-Support, Battery
7	3231-21	6	Screw-CARR
8	87-5120-03	1	Bracket-Holder, Battery
9	87-5110-03	1	Support-Base, Battery
10	32128-20	2	Nut-HF
11	323-9	1	Screw-HH
12	3230-23	4	Screw-CARR
13	32128-33	1	Nut-HF
14	2412-89	1	Clamp
15	321-4	1	Screw-HH
16	93-6687	1	Decal-No Step
17	19-4050	2	Knob
18	3269-27	4	Rivet-Snap
19	87-5130-03	1	Cover-Battery
20	87-7620	1	Shield-Terminal, Battery
21	106-5187	1	Battery
23	106-5188	1	Adapter-Height, Battery

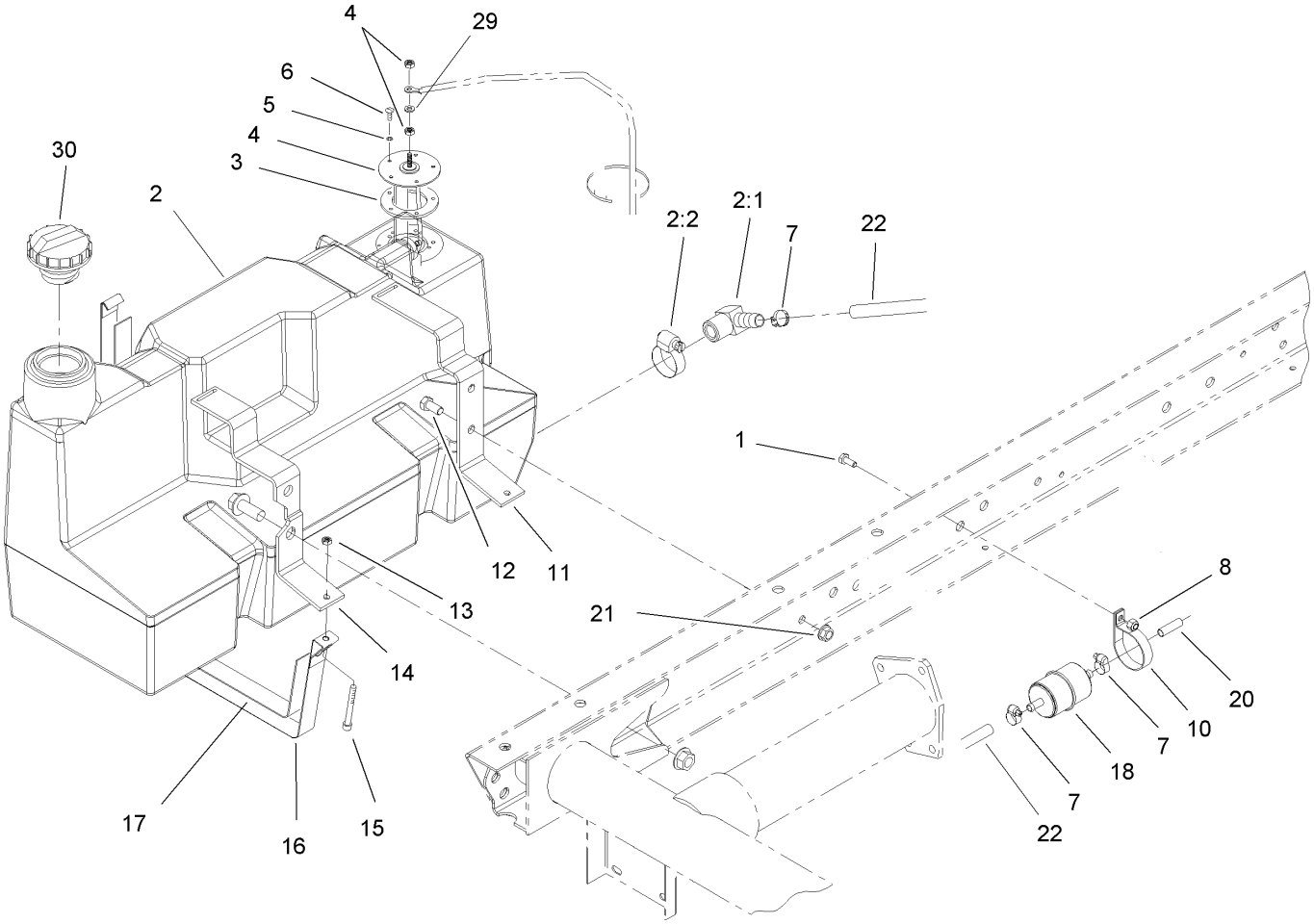

Fuel Tank Assembly

Ref	Part No.	Qty.	Description
1	321-3	1	Screw-HH
2	98-2919	1	Tank-Fuel
2:1	353-781	1	Fitting-Elbow
2:2	2412-36	1	Clamp-Hose
3	62-7650	1	Gasket
4	63-7640	1	Sender-Fuel
5	3253-15	5	Washer-Lock
6	32122-24	5	Screw-PTH
7	2412-108	4	Clamp-Worm
8	32128-33	1	Nut-HF
10	2412-148	1	Clamp-R
11	87-3140-03	1	Support-Gas Tank, Rear
12	323-4	2	Screw-HH
13	3296-42	2	Nut-Lock, NI
14	87-3150-03	1	Support-Gas Tank, Front
15	3274-54	2	Screw-HSH
16	87-3160	2	Strap-Tank, Gas
17	87-3170	2	Felt-Strap
18	99-9404	1	Filter-Fuel, Inline
20	66-1600	1	Hose-Fuel
21	3290-357	2	Nut-HHF
22	63-9640	1	Hose
29	5-3637	1	Spacer
30	93-3101	1	Cap-Fuel

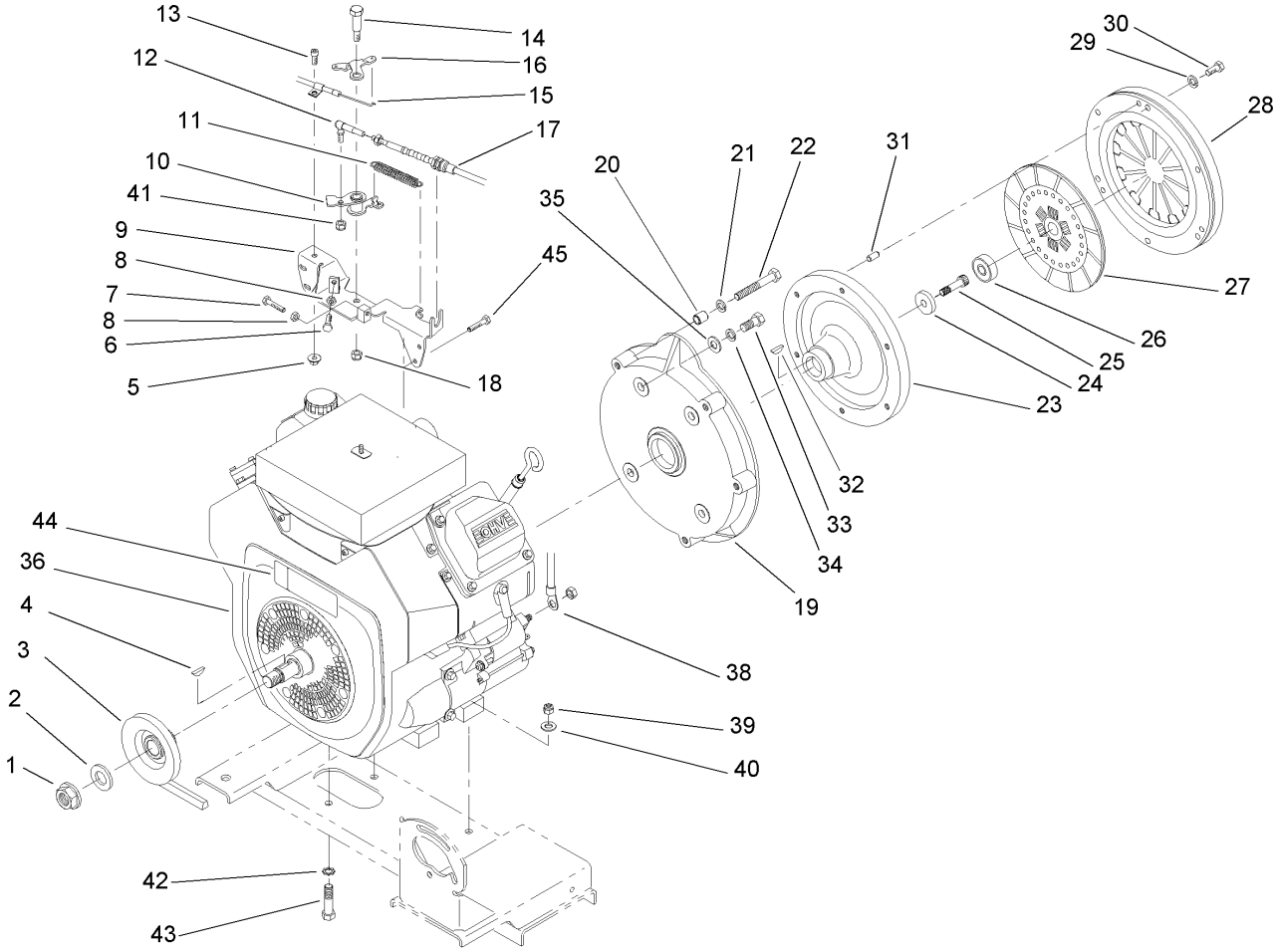

Engine Assembly

Ref	Part No.	Qty.	Description
1	3296-15	1	Nut-Lock, NI
2	3256-28	1	Washer-Flat
3	87-7710	1	Pulley
4	3257-7	1	Key-Woodruff
5	32128-33	1	Nut-HF
6	329-6	1	Screw-HH
7	329-7	1	Screw-HH
8	3220-1	2	Nut-Jam
9	87-7780-03	1	Bracket-Throttle
10	87-7800	1	Lever-Throttle
11	67-1450	1	Spring-Idler, Deck
12	18-1720	1	Governor Ball Joint ASM
13	3274-15	1	Screw-HSH
14	7-0030	1	Bolt-Shoulder
15	106-7943	1	Cable-Control, Choke
16	87-7790	1	Lever-Choke
17	106-6734	1	Cable-Accelerator
18	3296-29	1	Nut-Lock, NI
19	87-6390	1	Adapter-Clutch
20	92-2152	2	Bushing
21	3253-22	4	Washer-Lock
22	56-2150	4	Screw-HH
23	87-6480	1	Flywheel
24	87-6080	1	Washer

Ref	Part No.	Qty.	Description
25	3274-1	1	Screw-HSH
26	87-6460	1	Bearing-Ball (W/Seal)
27	104-9219	1	Disc-Clutch
28	104-9231	1	Plate-Pressure, Clutch
29	3253-4	6	Washer-Lock
30	33114-016	6	Screw-HH
31	42-7160	3	Pin
32	3257-5	1	Key-Woodruff
33	324-4	4	Screw-HH
34	3253-6	4	Washer-Lock
35	3256-25	4	Washer-Flat
36	105-4203	1	Engine-Kohler
38	87-8000	1	Cable-Battery, Positive
39	3296-39	4	Nut-Lock, NI
40	3256-24	4	Washer-Flat
41	3296-3	1	Nut-Lock
42	3255-9	1	Washer-Lock, EXT
43	323-9	4	Screw-HH
44	80-8040	1	Decal-Warning
45	32144-4	2	Screw-HWH

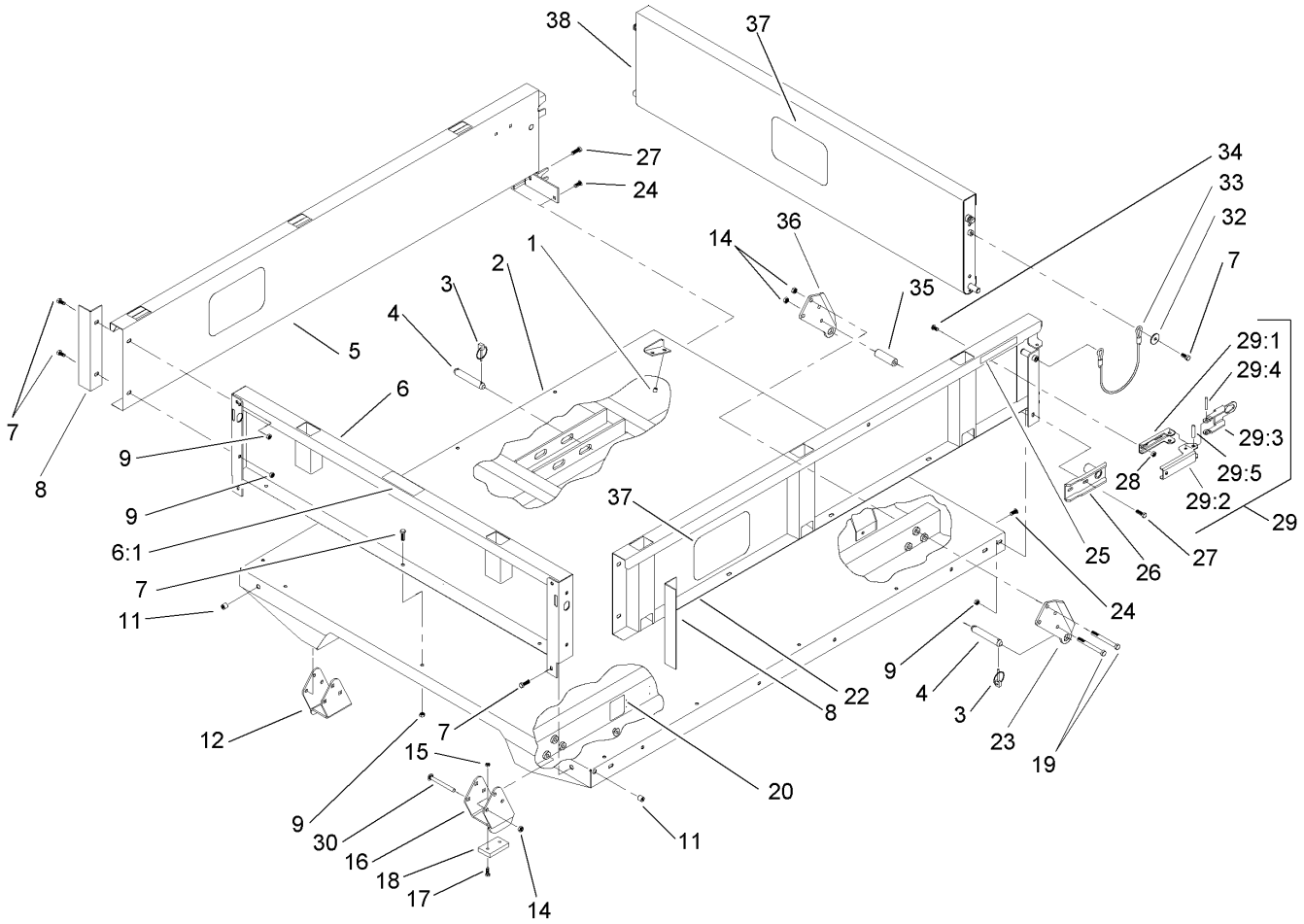

Full Bed and Side Panel Assembly

Ref	Part No.	Qty.	Description
1	32148-6	4	Insert-Nut
2	93-9724-03	1	Flatbed-Full
3	92-1298	8	Pin-Lynch
4	92-1233	4	Pin-Clevis
5	92-1255-03	1	RH Side Panel ASM
6	92-5982	1	Front Panel ASM
6:1	93-6689	1	Decal-No Riders
7	3234-7	21	Screw-HHF
8	92-1320-03	2	Angle-Side
9	104-8300	23	Nut-Flange, NI
11	32148-7	4	Insert-Nut
12	106-2423-03	1	RH Spacer Bracket ASM
14	3296-44	14	Nut-Lock, NI
15	3296-42	4	Nut-Lock, NI
16	106-2422-03	1	LH Spacer Bracket ASM
17	3250-45	4	Screw-SPH
18	93-9719	2	Block-Wear
19	323-42	8	Screw-HH
20	93-9899	2	Decal-Warning
22	92-1248-03	1	LH Side Panel ASM
23	93-9720-03	2	Bracket-Pivot, Long (LH)
24	3230-1	2	Bolt-CARR
25	93-9868	2	Decal-Caution
26	92-1265-03	2	Bracket-Pivot

Ref	Part No.	Qty.	Description
27	3234-29	6	Screw-HHF
28	32128-20	4	Nut-HF
29	99-1123	2	Latch ASM
29:1	92-1271	1	Pivot-Latch
29:2	99-1113	1	Handle-Latch
29:3	99-1112	1	Plate-Retainer
29:4	32121-78	1	Pin-Roll
29:5	32121-25	1	Pin-Roll
30	3231-24	6	Screw-CARR
32	3256-57	4	Washer-Flat
33	93-9595	2	Lanyard
34	3230-15	4	Screw-CARR
35	93-9575	2	Tube-Pivot, Flatbed
36	93-9721-03	2	Bracket-Pivot, Long (RH)
37	105-4222	3	Decal
38	92-1259-03	1	Tailgate-Rear

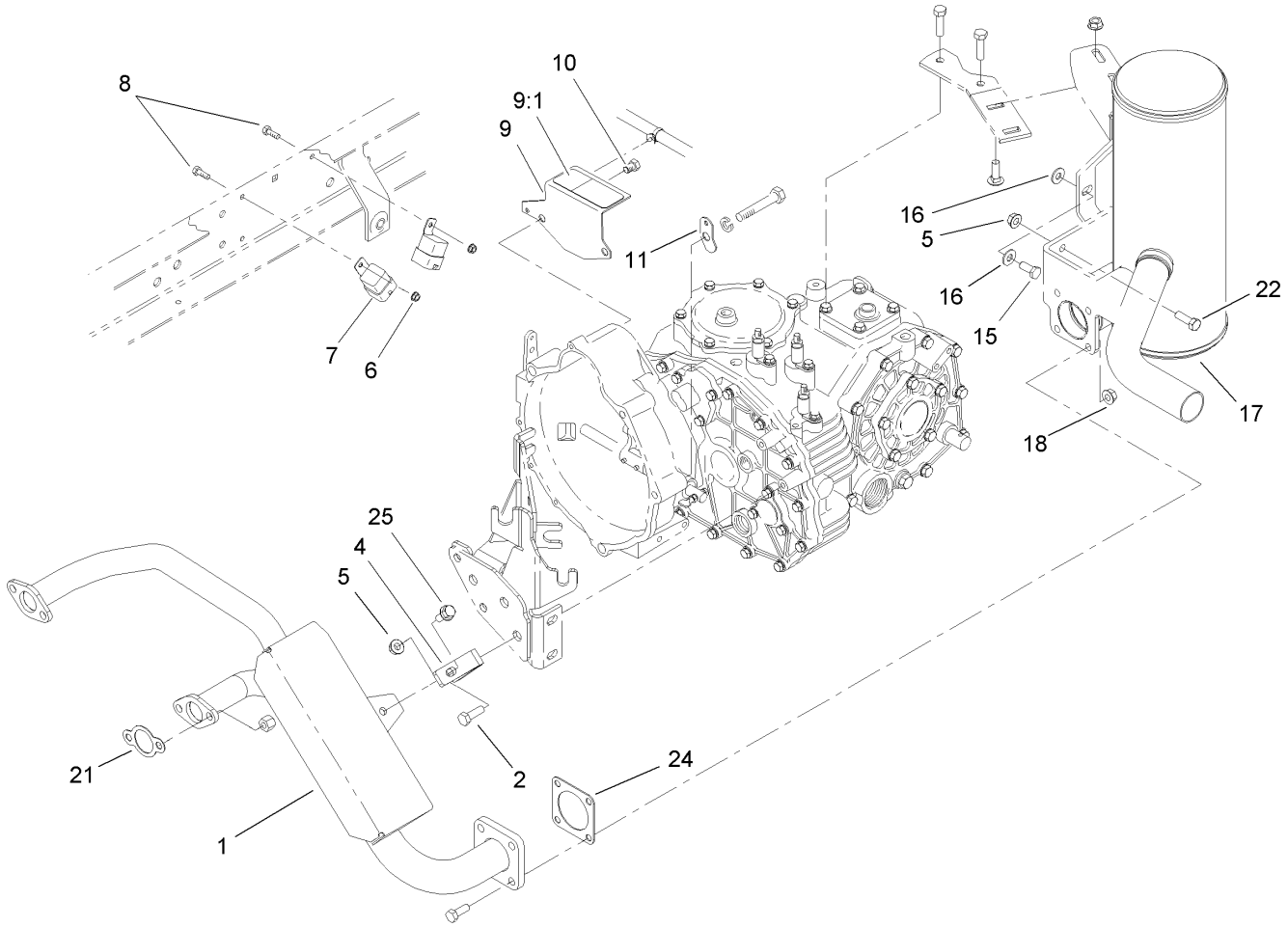

Muffler and Relay Assembly

Ref	Part No.	Qty.	Description
1	106-7855	1	Manifold-Cooled, Air
2	33114-025	1	Screw-HH
4	106-7880-03	1	Mount-Angle
5	32128-20	3	Nut-HF
6	32128-33	2	Nut-HF
7	70-1480	2	Relay
8	321-4	2	Screw-HH
9	87-8790	1	Plate-Cover, Starter
9:1	66-6840	1	Decal-Warning, Hot Surface
10	60-9920	2	Screw
11	87-6410	1	Bracket-Harness
15	33114-020	1	Screw-HH
16	87-8640	2	Washer-Flat
17	105-1778	1	Muffler-Exhaust
18	32128-25	4	Nut-HF
21	93-0350	3	Gasket-Exhaust
22	322-5	2	Screw-HH
24	105-4209	1	Gasket-Muffler
25	3234-5	1	Screw-HHF

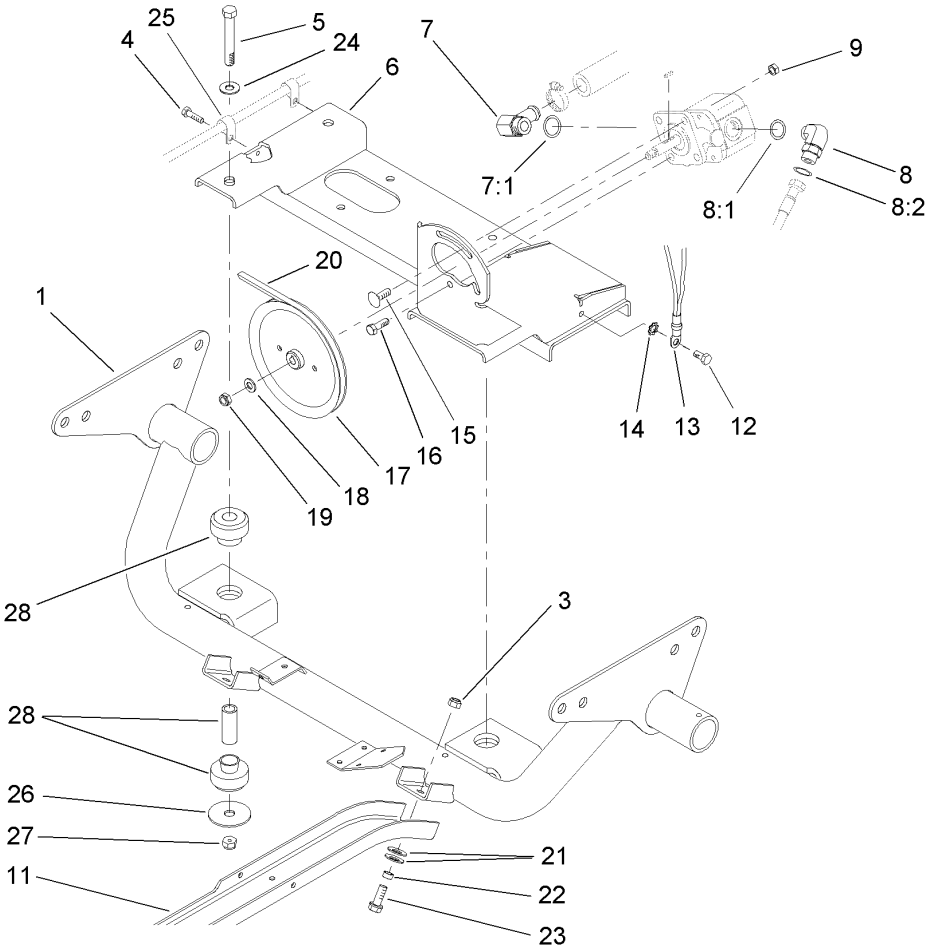

Engine Support Assembly

Ref	Part No.	Qty.	Description
1	87-8150-03	1	Engine Support ASM
3	3296-39	6	Nut-Lock, NI
4	32144-10	2	Screw-HWH
5	324-12	2	Screw-HH
6	87-6400-03	1	Engine Mount ASM
7	87-8170	1	Fitting
7:1	237-80	1	O-Ring
8	340-18	1	Fitting-HYD, 90 DEG
8:1	237-79	1	O-Ring
8:2	237-22	1	O-Ring
9	3296-29	2	Nut-Lock, NI
11	87-4730-03	2	Guard-Belly
12	32144-14	1	Screw-HWH
13	87-3080	1	Cable-Battery, Negative
14	3255-8	1	Washer-Lock
15	3230-22	1	Screw-CARR
16	322-5	1	Screw-HH
17	87-7740	1	Pulley
18	3256-45	1	Washer-Flat
19	3296-5	1	Nut-Lock
20	87-8370	1	V-Belt
21	3290-413	12	Washer-Belleville
22	76-9100	6	Spacer-Speed, Reel
23	3234-11	6	Screw-HHF

Ref	Part No.	Qty.	Description
24	3256-25	2	Washer-Flat
25	2412-89	2	Clamp
26	87-5100	2	Washer-Snubbing
27	3296-48	2	Nut-Lock, NI
28	106-7865	2	Engine Mount ASM

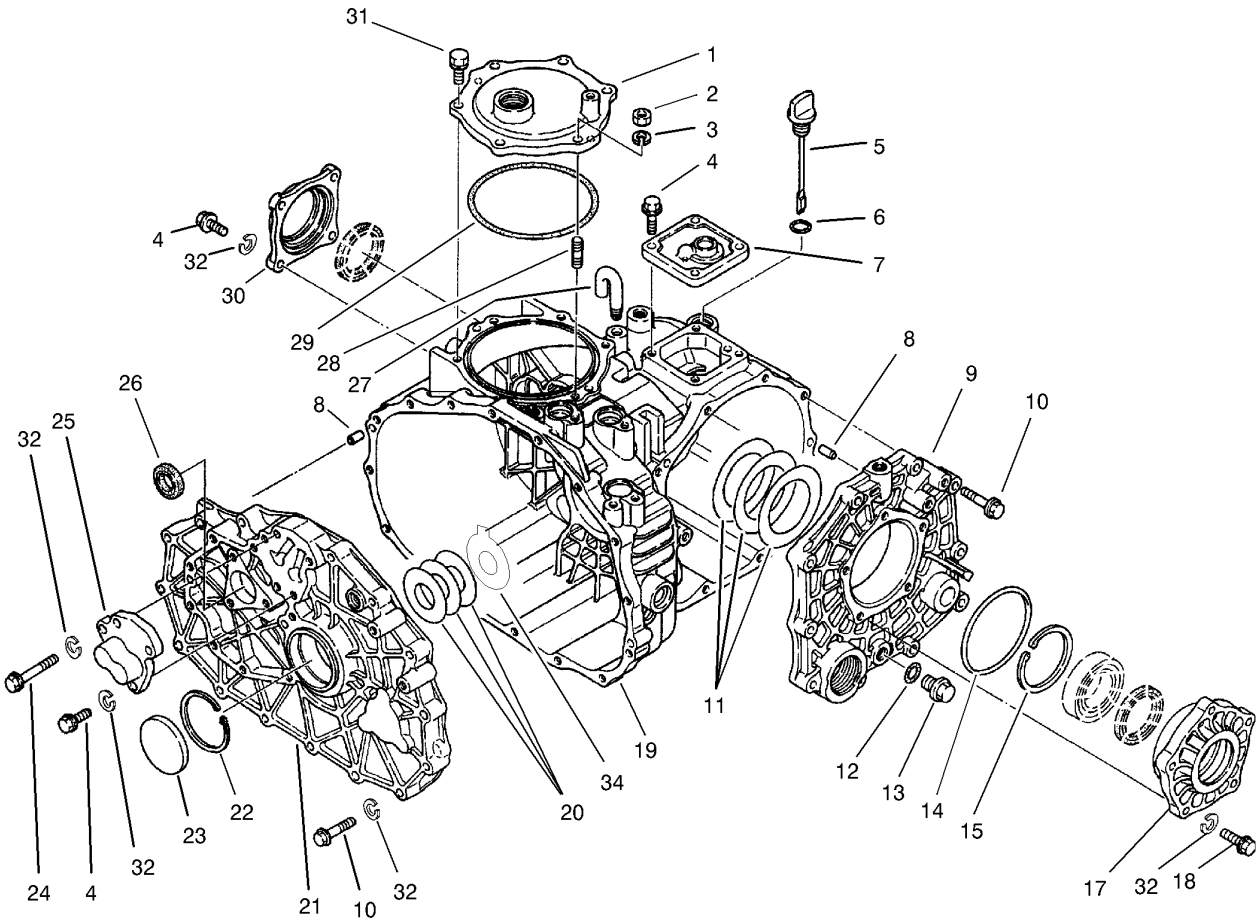

Case Assembly
Transaxle Assembly No. 105-4180

Ref	Part No.	Qty.	Description
1	92-0656	1	Cover-Upper, PTO
2	68-9400	1	Nut-Flange
3	92-0762	1	Washer-Spring
4	33114-025	11	Screw-HH
5	92-0662	1	Cap-Oil
6	92-0788	1	O-Ring
7	92-0652	1	Cover-Upper
8	92-0765	4	Pin-Parallel
9	92-0653	1	Cover-Side
10	33114-040	25	Screw-HH
11	92-0809	1	Set-Shim
12	92-0787	1	O-Ring
13	92-0773	1	Plug-Drain
14	92-0789	1	O-Ring
15	92-0760	1	Ring-Snap
17	92-0654	1	Carrier-Differential
18	33114-030	5	Screw-HH
19	92-0651	1	Case-Transmission
20	100-4460	1	Shim Set
21	100-4461	1	Plate-Center
22	92-0759	1	Ring-Snap
23	92-0807	1	Cap-Sealing
24	48-7560	1	Bolt-HH
25	92-0706	1	Shaft-Fork

Ref	Part No.	Qty.	Description
26	92-0791	1	Seal-Oil
27	92-0743	1	Breather-Air
28	92-0804	1	Stud
29	92-0790	1	O-Ring
30	92-0655	1	Cover-Seal, Axle
31	92-0796	5	Bolt
32	3253-4	42	Washer-Lock
34	100-4465	1	Shim (W/Tab)

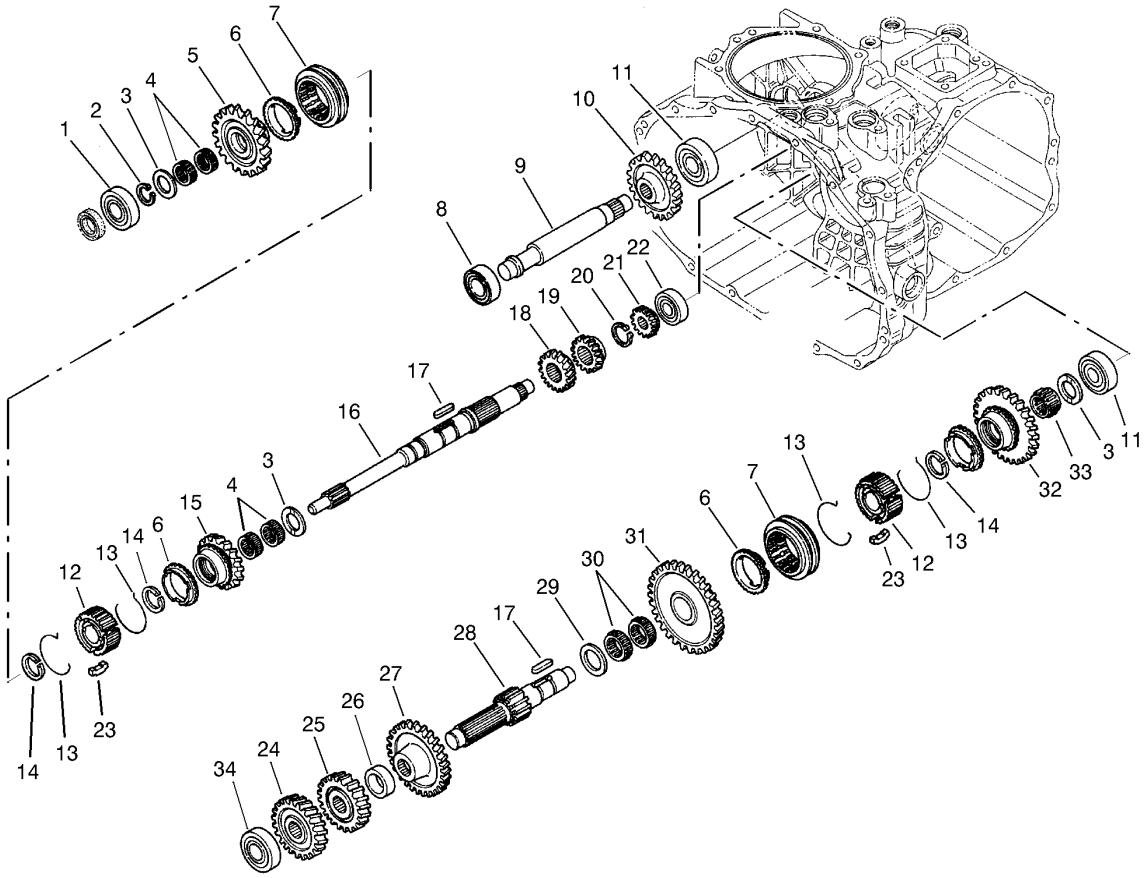

Gear Shaft Assembly
Transaxle Assembly No. 105-4180

Ref	Part No.	Qty.	Description
1	251-8	1	Bearing-Ball
2	92-0753	1	Ring-Snap
3	92-0740	3	Washer-Thrust
4	92-0781	4	Bearing-Needle
5	92-0820	1	Gear-Main, 27 Tooth
6	92-0667	3	Ring-Synchro
7	92-0668	2	Shifter-Synchro
8	251-346	2	Bearing-Ball
9	92-0824	1	Shaft-Idler, Reverse
10	92-0684	1	Gear-Reverse, 33 Tooth
11	92-0778	2	Bearing
12	92-0664	2	Hub-Synchro
13	92-0666	4	Spring-Synchro
14	92-0763	3	Ring-Snap
15	92-0821	1	Gear-Main, 24 Tooth
16	92-0663	1	Shaft-Main
17	92-0772	2	Key
18	92-0687	1	Gear-Main, 16 Tooth
19	92-0672	1	Gear-Main, 18 Tooth
20	92-0754	1	Ring-Snap
21	92-0673	1	Gear-Main, 14 Tooth
22	92-0650	1	Bearing
23	92-0665	6	Key-Synchro
24	92-0822	1	Gear-Reduction, 28 Tooth

Ref	Part No.	Qty.	Description
25	92-0679	1	Gear-Reduction, H23 Tooth
26	92-0680	1	Collar
27	92-0823	1	Gear-Reduction, 43 Tooth
28	92-0674	1	Shaft-Reduction
29	92-0682	1	Washer-Thrust
30	92-0681	2	Bearing-Needle
31	92-0677	1	Gear-Reduction, 49 Tooth
32	92-0819	1	Gear-Reduction, 40 Tooth
33	92-0782	1	Bearing-Needle
34	105-7985	1	Bearing

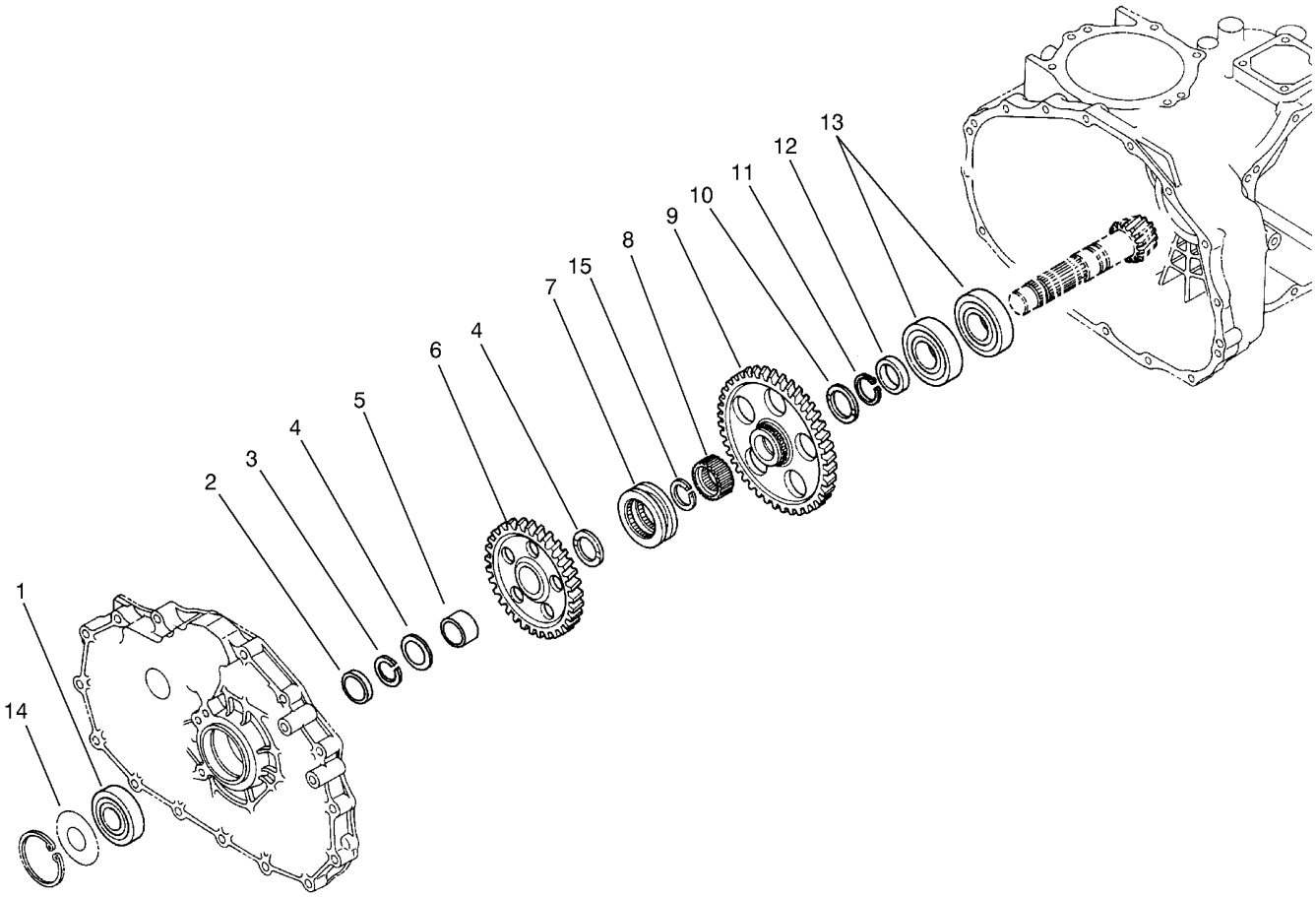

Countershaft Assembly
Transaxle Assembly No. 105-4180

Ref	Part No.	Qty.	Description
1	92-0712	1	Bearing-Ball
2	92-0716	1	Collar
3	92-0764	2	Ring-Snap
4	92-0711	2	Washer-Thrust
5	92-0783	1	Race-Inner
6	92-0715	1	Gear-Shaft, Counter
7	92-0718	1	Shifter
8	105-7986	1	Collar-Spline
9	92-0717	1	Gear-Shaft, Counter
10	92-0741	1	Washer-Thrust
11	92-0755	1	Ring-Snap
12	92-0713	1	Collar
13	92-0714	2	Bearing
14	92-0710	1	Gear-Ring
15	105-7987	1	Ring-Snap

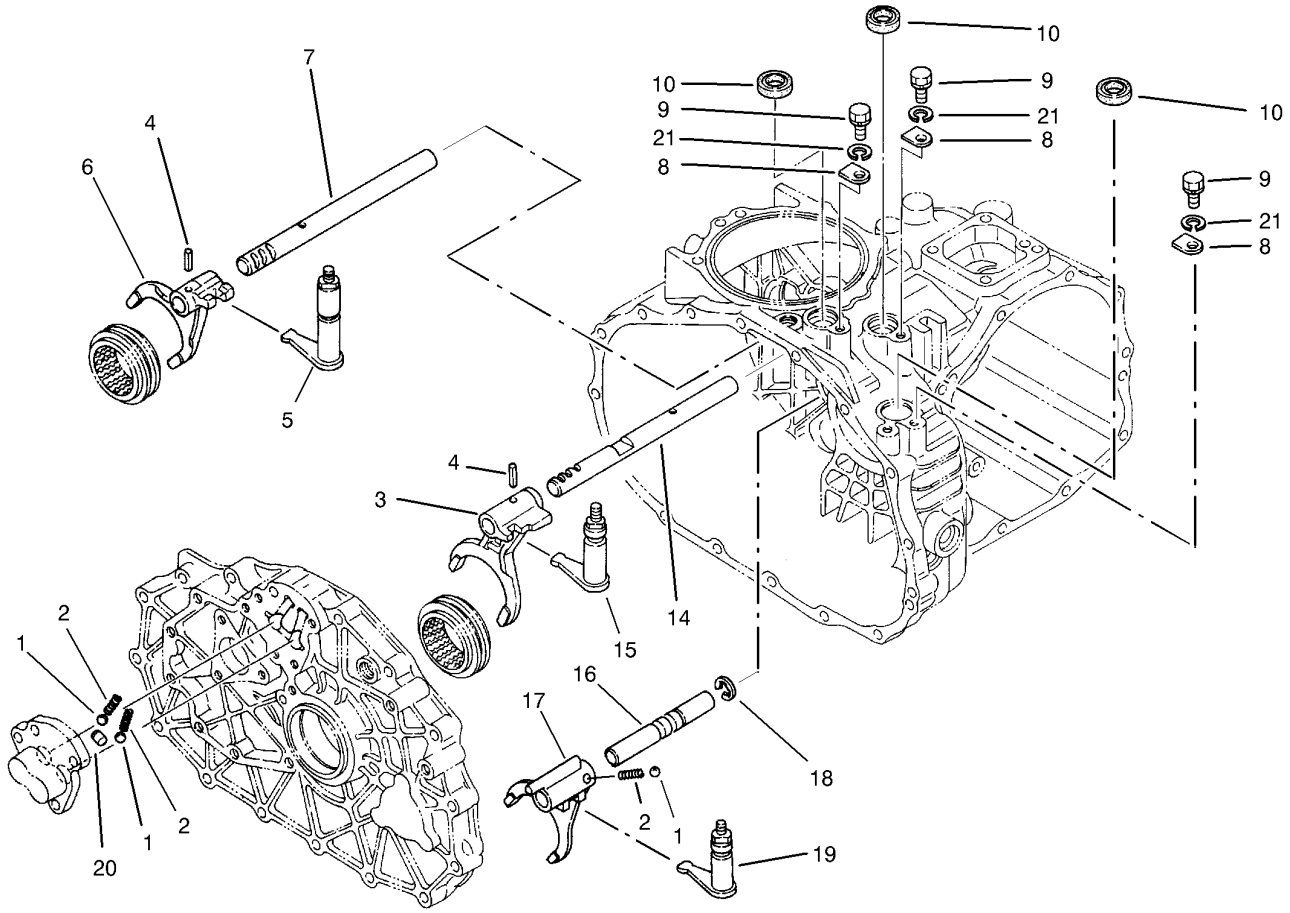

Shift Fork Assembly
Transaxle Assembly No. 105-4180

Ref	Part No.	Qty.	Description
1	92-0785	3	Ball-Steel
2	92-0731	3	Spring
3	92-0700	1	Fork-Shift
4	92-0769	2	Pin-Roll
5	92-0817	1	Arm-Shift
6	92-0701	1	Fork-Shift
7	92-0699	1	Shaft-Fork
8	92-0732	3	Plate-Keeper
9	33114-016	3	Screw-HH
10	92-0729	3	Seal-Oil
14	92-0698	1	Shaft-Fork
15	92-0816	1	Arm-Shift
16	92-0708	1	Shaft-Fork
17	92-0709	1	Fork-Shift
18	92-0761	1	Ring-E
19	92-0818	1	Arm-Shift
20	92-0705	1	Lock-Spindle
21	42-9850	3	Washer-Lock, Spring

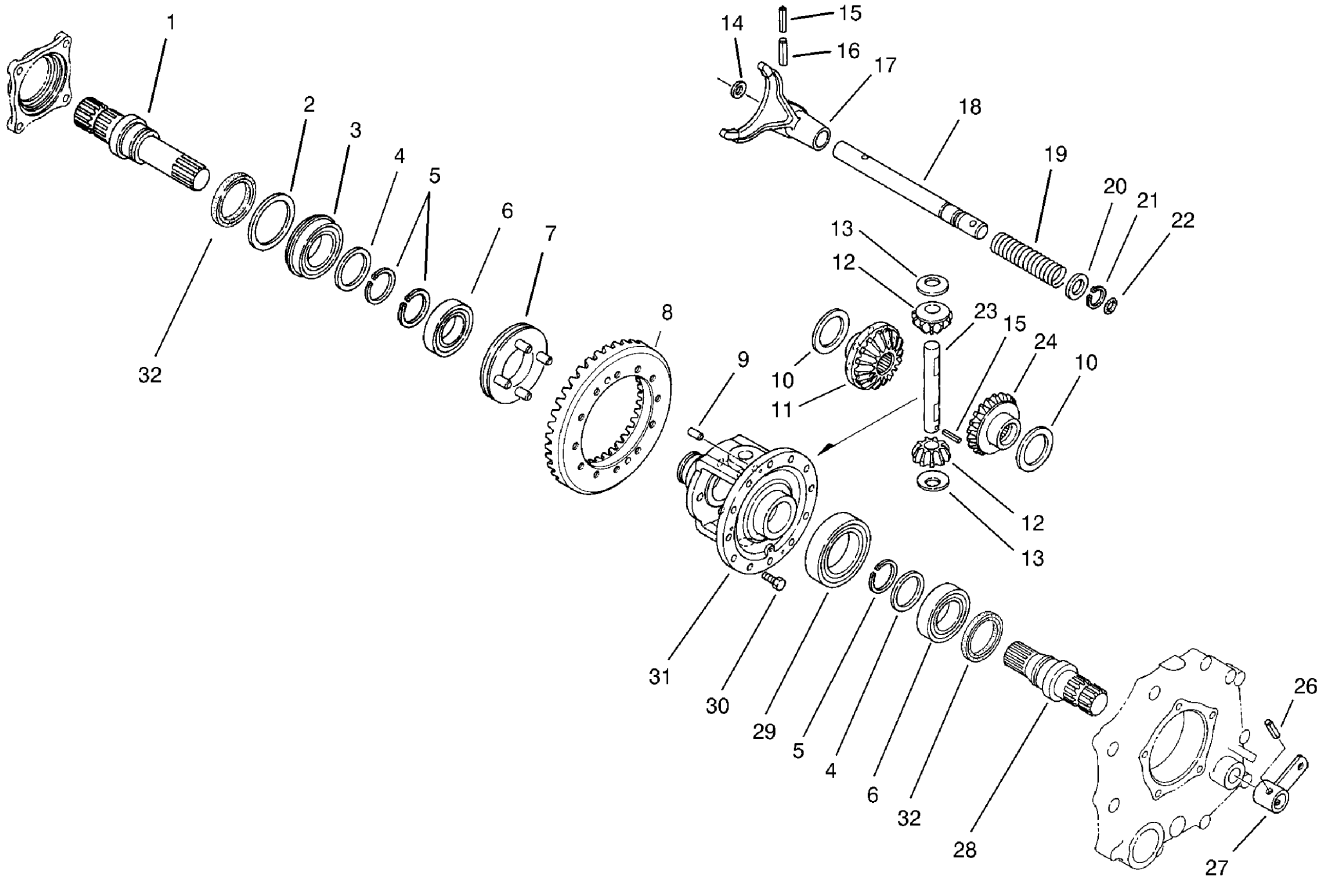

Differential Gear Assembly
Transaxle Assembly No. 105-4180

Ref	Part No.	Qty.	Description
1	92-0726	1	Shaft-Axle, Right
2	92-0728	1	Washer
3	92-0780	1	Bearing
4	92-0727	2	Washer
5	92-0756	3	Ring-Snap
6	92-0775	2	Bearing
7	92-0730	1	Slider-Differential, Lock
8	105-7983	1	Countershaft And Ring Gear
9	92-0765	2	Pin-Parallel
10	92-0747	2	Side-Gear, Left Inner
11	92-0746	1	Gear-Side, RH
12	92-0748	2	Pinion-Differential
13	92-0750	2	Washer
14	92-0744	1	Washer
15	92-0768	2	Pin-Roll, Spring
16	92-0771	1	Pin-Roll, Spring
17	92-0721	1	Fork-Lock, Differential
18	92-0722	1	Shaft-Fork, Lock Differential
19	92-0723	1	Spring-Lock, Differential
20	92-0733	1	Washer
21	92-0753	1	Ring-Snap
22	92-0787	1	O-Ring
23	92-0749	1	Shaft-Pinion
24	92-0745	1	Gear-Side, LH

Ref	Part No.	Qty.	Description
26	92-0770	1	Pin-Roll, Spring
27	92-0724	1	Arm-Lock, Differential
28	92-0725	1	Shaft-Axle, Left
29	92-0776	1	Bearing
30	92-0803	12	Bolt
31	92-0720	1	Case-Differential
32	92-0793	2	Seal-Oil

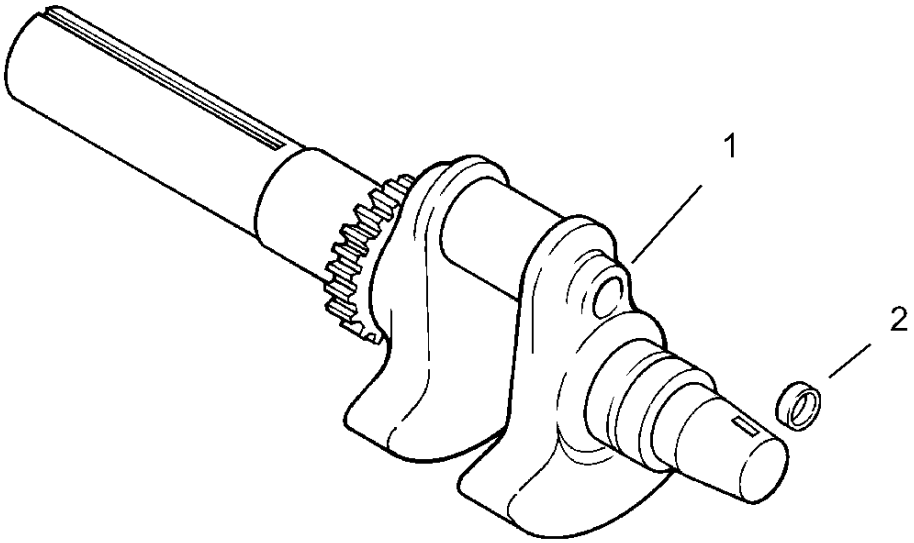

Crankshaft Assembly
Kohler CH23-76548

Ref	Part No.	Qty.	Description
❸1	24 014 26-S	1	Crankshaft (Includes 2)
❸2	52 139 09-S	1	Plug-Cup

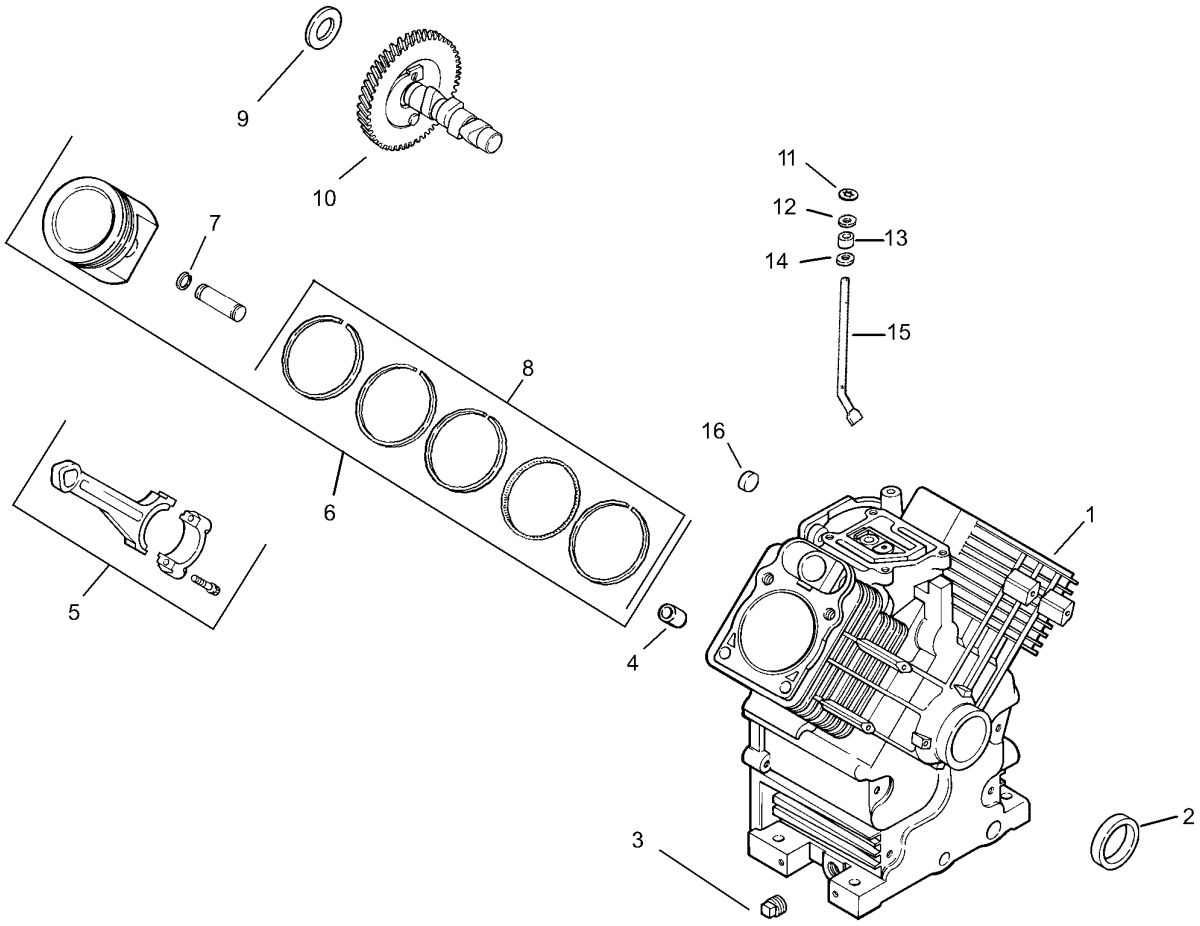

Crankcase Assembly
Kohler CH23-76548

Ref	Part No.	Qty.	Description
❸1		1	Crankcase (Use Short Block Or Miniblock)
❸2	24 032 01-S	1	Seal-Oil, Front
❸3	25 139 57-S	2	Plug-SQH (3/8In NPTF)
❸4	24 380 13-S	6	Pin-Locating
❸5	24 067 13-S	2	Rod-Connecting (STD.)
❸	24 067 14-S	2	Rod-Connecting (.25)
❸6	24 874 09-S	2	Piston W/Ring Set (STD.)(Includes 7,8)
❸	24 874 10-S	2	Piston W/Ring Set (.25)
❸	24 874 11-S	2	Piston W/Ring Set (.50)
❸	24 874 15-S	2	Piston W/Ring Set (.08)
❸7	24 018 01-S	4	Retainer-Pin, Piston
❸8	24 108 08-S	2	Ring Set (STD. And .08)
❸	24 108 09-S	2	Ring Set (.25)
❸	24 108 10-S	2	Ring Set (.50)
❸9	12 422 09-S	1	Shim-Camshaft, Red
❸	12 422 13-S	1	Shim-Camshaft, Black
❸	12 422 07-S	1	Shim-Camshaft, White
❸	12 422 08-S	1	Shim-Camshaft, Blue
❸	12 422 10-S	1	Shim-Camshaft, Yellow
❸	12 422 11-S	1	Shim-Camshaft, Green
❸	12 422 12-S	1	Shim-Camshaft, Gray
❸10	24 012 10-S	1	Camshaft

Ref	Part No.	Qty.	Description
❸11	24 018 09-S	1	Retainer-Ring
❸12	M-931010-S	1	Washer-Plain (9Mm)
❸13	28 032 09-S	1	Seal-Cross Shaft, Governor
❸14	24 468 15-S	1	Washer-Flat (1/4In)
❸15	24 144 33-S	1	Shaft-Governor Cross
❸16	52 139 09-S	1	Plug-Cup

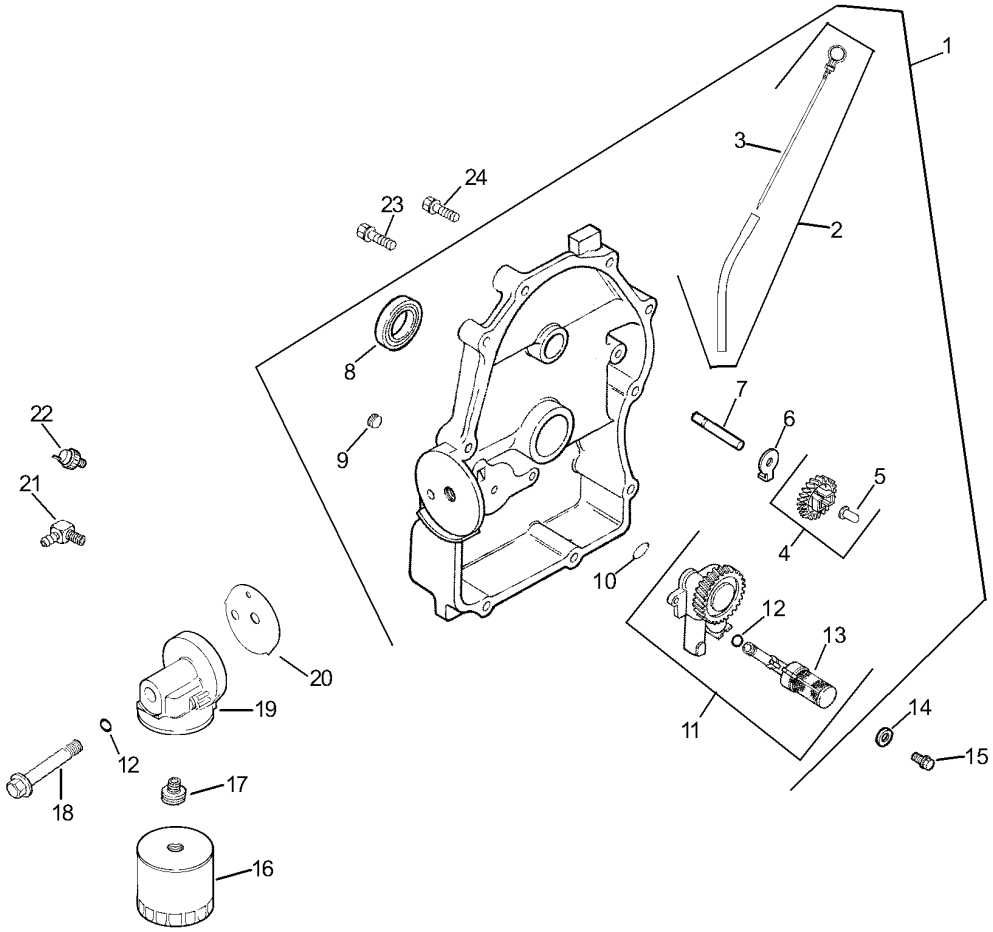

Oil Pan / Lubrication Assembly
Kohler CH23-76548

Ref	Part No.	Qty.	Description
❸1	24 009 83-S	1	Plate, Closure ASM. (Includes 2-13)
❸2	24 755 121-S	1	Tube ASM., Dipstick (Includes 3)
❸3	24 038 10-S	1	Dipstick
❸4	24 043 12-S	1	Kit, Governor Gear (Includes 5)
❸5	12 380 01-S	1	Pin-Regulating, Governor
❸6	52 448 02-S	1	Tab-Locking
❸7	12 144 02-S	1	Shaft-Gear, Governor
❸8	52 032 08-S	1	Seal-Oil (PTO End)
❸9	25 139 60-S	2	Plug-Pipe, 1/8In Allen Head
❸10	24 153 08-S	1	O-Ring
❸11	24 393 10-S	1	Oil Pump Assembly (Includes 12,13)
❸12	24 153 01-S	1	O-Ring (Oil Pick Up)
❸13	24 381 04-S	1	Pick Up-Oil
❸14	M-631005-S	2	Washer-Plain (6Mm)
❸15	M-645025-S	2	Screw-HF (M6X1.0X25)
❸16	12 050 01-S	1	Filter-Oil
❸17	24 136 01-S	1	Nipple-Filter, Oil
❸18	24 211 01-S	1	Bolt-Oil Filter Adapter
❸19	23 029 01-S	1	Adapter, Oil Filter
❸20	24 04129-S	1	Gasket, Oil Filter Adapter
❸21	25 155 02-S	1	Connector
❸22	25 099 24-S	1	Switch-Pressure

Ref	Part No.	Qty.	Description
❸23	24 086 16-S	9	Screw-HF (M8X1.25X45)
❸24	24 086 17-S	1	Screw-HF (M8X1.25X45)
❶❸	25 113 05-S	1	Decal-Sentry, Oil

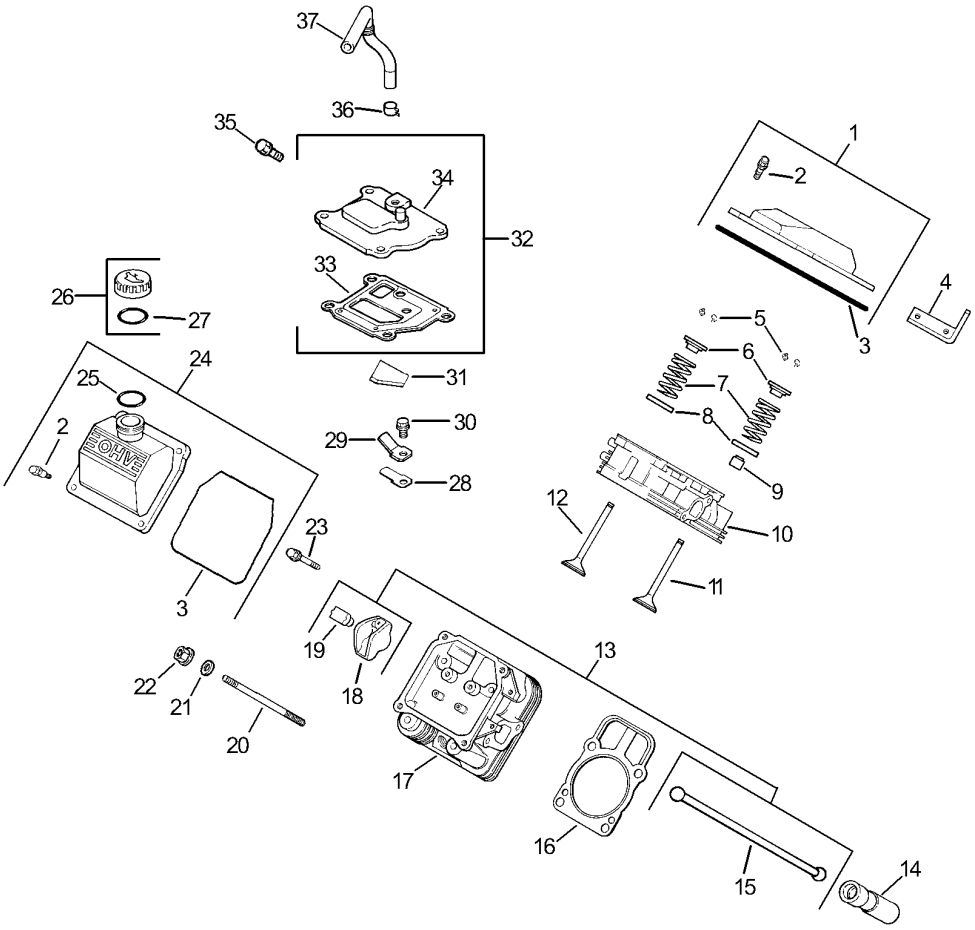

Head / Valve / Breather Assembly
Kohler CH23-76548

Ref	Part No.	Qty.	Description
❸1	24 755 74-S	1	Kit, Valve Cover-Plain (Includes 2,3)
❸2	24 086 32-S	4	Screw-Shoulder, M6X1.0X30
❸3	24 153 16-S	1	O-Ring
❸4	24 455 01-S	2	Strap-Lifting
❸5	12 755 03-S	4	Retainer Kit
❸6	12 173 01-S	4	Cap-Spring, Valve
❸7	24 089 02-S	4	Spring-Valve
❸8	235011-S	4	Retainer-Spring
❸9	66 032 05-S	2	Seal-Stem, Valve
❸10	24 318 68-S	1	No. 1 Cylinder Head ASM
❸11	24 017 01-S	2	Valve-Intake (STD.)
❸	24 017 02-S	2	Valve-Intake (.25)
❸12	24 016 01-S	2	Valve-Exhaust (STD.)
❸	24 016 02-S	2	Valve-Exhaust (.25)
❸13	24 755 66-S	1	Kit, Valve Train (Includes 15,18,19)
❸14	25 351 01-S	4	Lifter-Valve
❸15	24 411 05-S	4	Rod-Push
❸16	24 041 40-S	2	Gasket-Cylinder Head
❸17	24 318 71-S	1	No. 2 Cylinder Head ASM
❸18	25 186 01-S	4	Arm-Rocker
❸19	24 599 01-S	4	Pivot-Arm, Rocker
❸20	24 072 09-S	8	Stud-Head, Cylinder

Ref	Part No.	Qty.	Description
❸21	24 468 16-S	8	Washer
❸22	24 100 10-S	8	Nut-HF (M8X1.25)
❸23	M-640034-S	4	Screw-HF (M6X1.0X34)
❸24	24 755 75-S	1	Kit, Valve Cover Oil Fill (Includes 2,3,25)
❸25	24 153 09-S	1	O-Ring
❸26	24 755 46-S	1	Kit, Oil Fill Cap (Includes 27)
❸27	24 153 03-S	1	"o"ring
❸28	24 402 03-S	1	Reed-Breather
❸29	12 018 01-S	1	Retainer-Reed, Breather
❸30	M-545010-S	1	Screw-HF (M5X0.8X10)
❸31	24 050 01-S	1	Filter-Breather
❸32	24 033 01-S	1	Kit, Breather (Includes 33, 34)
❸33	24 041 23-S	1	Gasket-Breather
❸34	24 096 58-S	1	Cover-Breather
❸35	M-645020-S	4	Screw-HF (M6X1.0X20)
❸36	25 237 14-S	2	Clamp
❸37	24 326 26-S	1	Hose-Breather

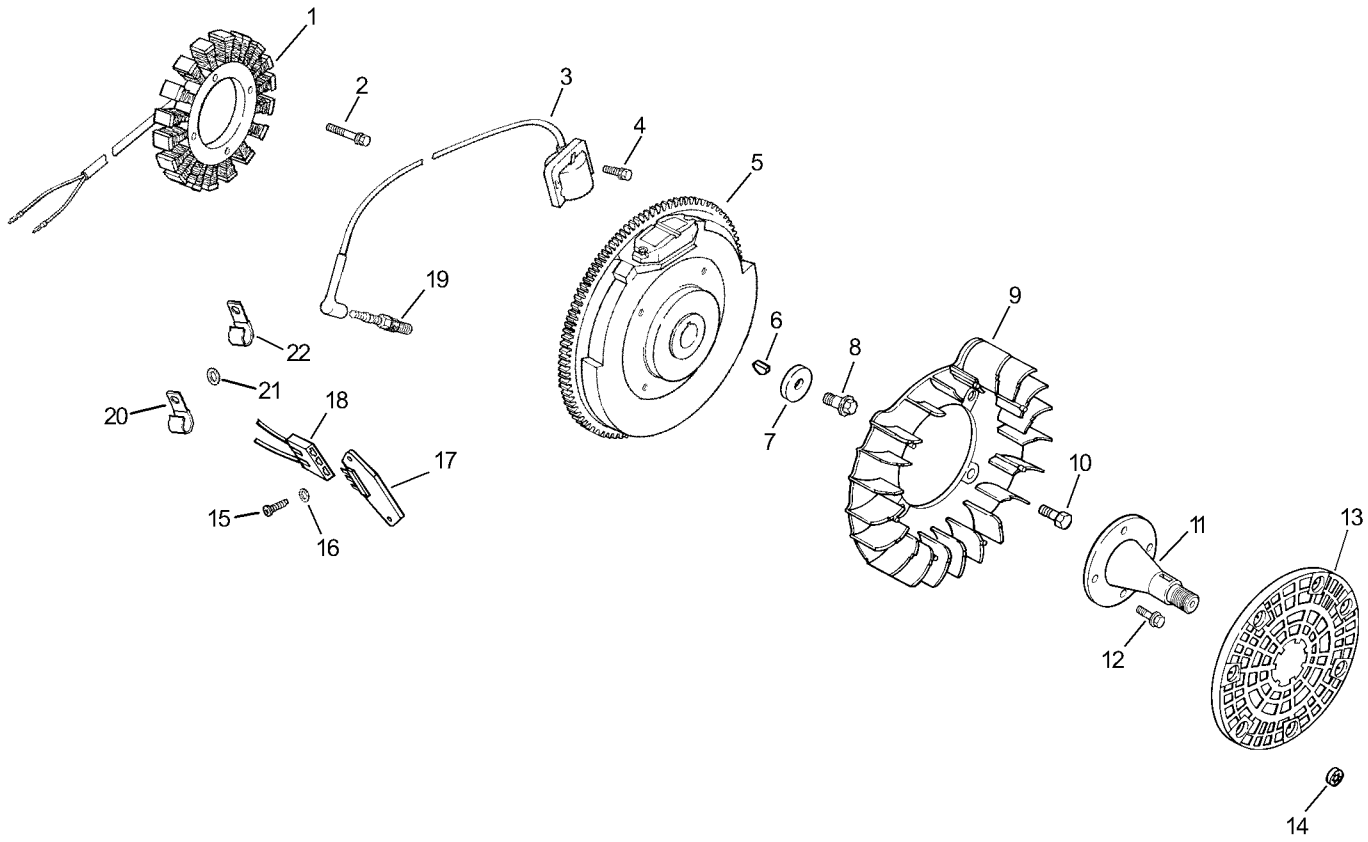

Ignition / Electrical Assembly
Kohler CH23-76548

Ref	Part No.	Qty.	Description
❸1	28 085 02-S	1	Stator Kit, W/Connectors
❸2	M-545030-S	2	Screw-Cap, Hex
❸3	24 584 01-S	2	Module-Ignition
❸4	M-545020-S	4	Screw-HF (M5X0.8X20)
❸5	24 025 01-S	1	Flywheel
❸6	X-42-15-S	1	Key
❸7	12 468 03-S	1	Washer-Plain (3/8In)
❸8	12 086 14-S	1	Screw-HF (M10X1.5X46)
❸9	24 157 01-S	1	Fan
❸10	25 086 47-S	4	Bolt-Shoulder (M6X1.0X16)
❸11	24 144 17-S	1	Shaft-Front Drive
❸12	M-839025-S	4	Screw-HF (M8X1.25X25)
❸13	24 162 16-S	1	Screen-Grass
❸14	24 018 03-S	3	Retainer
❸15	24 086 18-S	2	Screw-Head, Phillips
❸16	X-25-92-S	2	Washer-Plain
❸17	25 403 03-S	1	Rectifier-Regulator, 15 Amp
❸18	236602-S	1	Connector
❸19	12 132 02-S	2	Spark Plug
❸20	235173-S	1	Clip-Cable
❸21	X-25-63-S	1	Washer-Plain (1/4In)
❸22	48 154 02-S	1	Clip-Cable
❶❸	24 518 12-S	1	Lead-Black (5In, 12 Gauge)
❶❸	X-22-11-S	1	Washer-Lock (1/4In)

Ref	Part No.	Qty.	Description
❶❸	24 176 92-S	1	Harness-Wiring
❶❸	24 518 34-S	1	Lead
❶❸	25 454 03-S	3	Tie-Cable

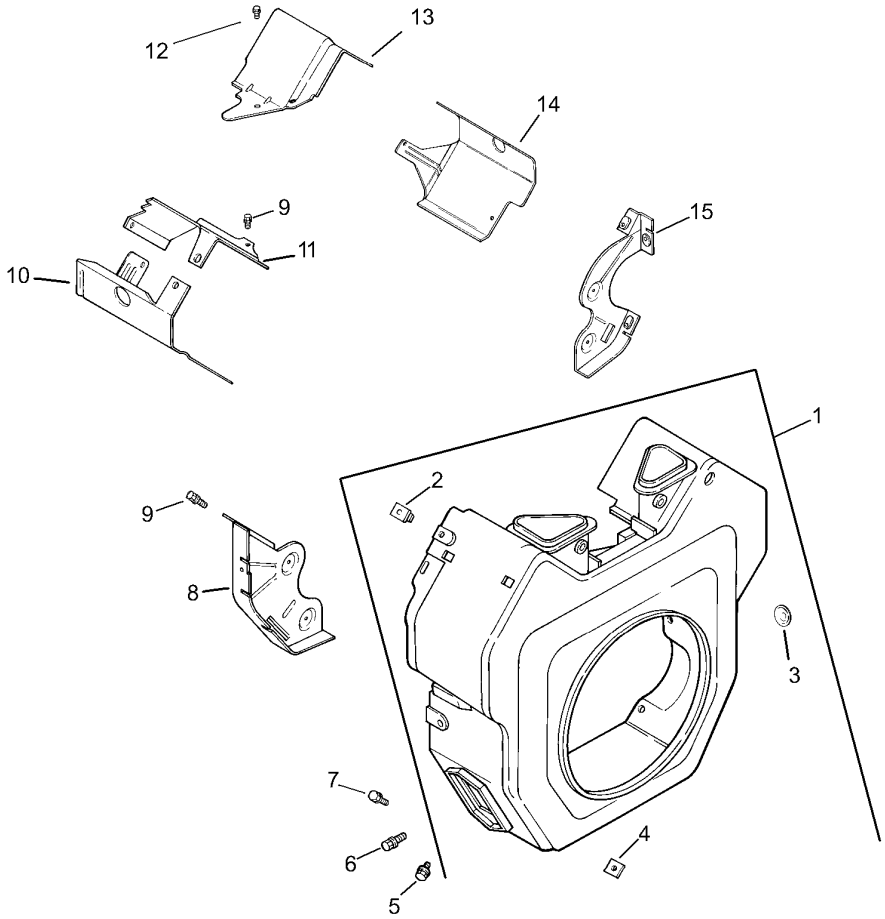

Blower Housing and Baffle Assembly
Kohler CH23-76548

Ref	Part No.	Qty.	Description
❸1	24 027 20-S	1	Housing, Blower (Includes 2-4)
❸2	24 100 02-S	2	Nut-Plastic
❸3	25 139 16-S	1	Plug-Button (9/16In)
❸4	24 100 01-S	2	Nut-Plastic
❸5	M-551016-S	1	Screw-HF (M5X0.8X16)
❸6	M-545016-S	3	Screw-HF (M5X0.8X16)
❸7	M-545020-S	4	Screw-HF (M5X0.8X20)
❸8	24 146 16-S	1	Plate-Backing, No. 2 Side
❸9	M-645016-S	6	Screw-HF (M6X1.0X16)
❸10	24 063 20-S	1	Baffle-Cylinder Barrel, No. 2 Side
❸11	24 063 17-S	1	Baffle-Valley (No. 2 Side)
❸12	M-545010-S	2	Screw-HF (M5X0.8X10)
❸13	24 063 24-S	1	Baffle-Valley, No. 1 Side
❸14	24 063 58-S	1	Baffle-Barrel, Cylinder (No. 1 Side)
❸15	24 146 20-S	1	Plate-Backing (No. 1 Side)
❶❸	24 113 81-S	1	Decal-23 Hp

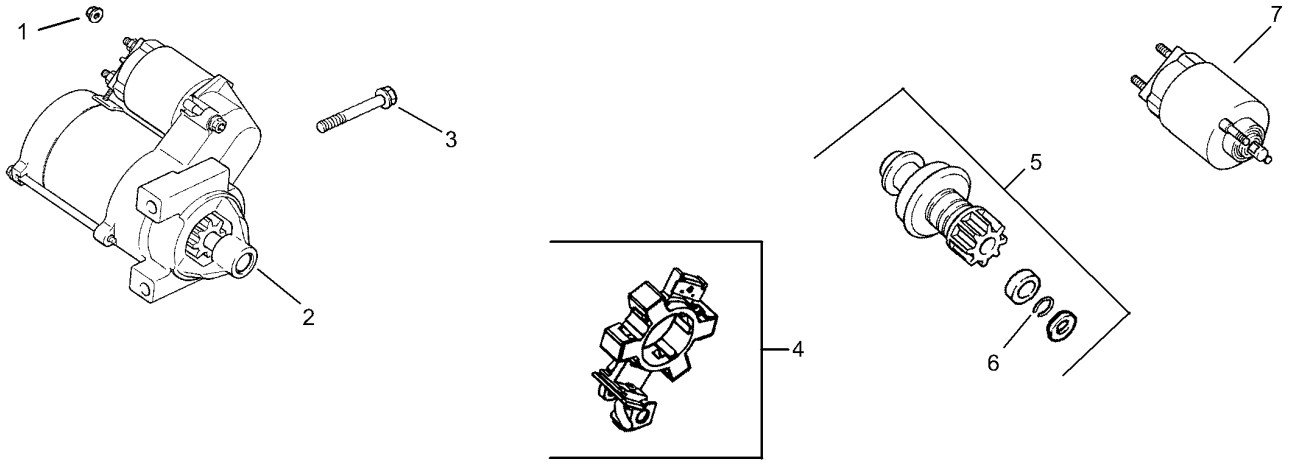

Starting System Assembly
Kohler CH23-76548

Ref	Part No.	Qty.	Description
❸1	M-841080-S	1	Nut-HF (M8X1.25)
❸2	25 098 08-S	1	Starter, Solenoid Shift ASM. (Includes 4-7)
❸3	M-839080-S	2	Screw-HF (M8X1.25X80)
❸4	25 225 01-S	1	Brush Kit
❸5	25 755 33-S	1	Kit, Pinion Drive (Includes 6)
❸6	25 141 05-S	1	Ring
❸7	25 435 04-S	1	Solenoid Kit

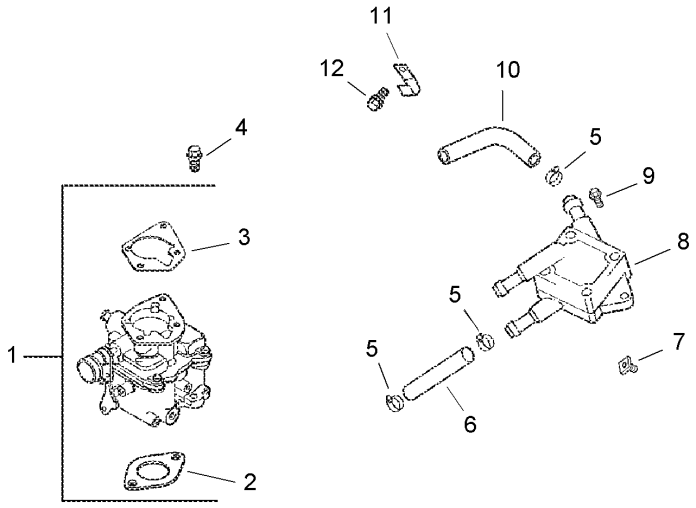

Fuel System Assembly
Kohler CH23-76548

Ref	Part No.	Qty.	Description
❸1	24 853 58-S	1	Carburetor Kit, W/Gasket (Incl. Ref. # 2-3)
❸2	24 041 53-S	1	Gasket-Carburetor
❸3	24 041 06-S	1	Gasket-Base, Air Cleaner
❸4	M-651025-S	2	Screw-HF (M6X1.0X25)
❸5	25 237 14-S	4	Clamp
❸6	24 353 02-S	1	Line-Fuel
❸7	24 100 01-S	2	Nut-Plastic
❸8	24 393 16-S	1	Pump-Fuel
❸9	24 086 12-S	2	Screw
❸10	25 353 32-S	1	Line-Fuel
❸11	47 154 01-S	1	Clip-Cable
❸12	M-650012-S	1	Screw-HF (M6X1.0X12)
❶❸	24 518 24-S	1	Lead-Ground (Solenoid To Carburetor Mounting Screw)
❶❸	24 757 01-S	1	Solenoid Kit
❶❸	24 757 02-S	1	Float Repair Kit
❶❸	24 757 03-S	1	Carburetor Repair Kit
❶❸	24 757 07-S	1	Choke Repair Kit
❶❸	24 757 08-S	1	Repair Kit (Accelerator Pump Seal And Bushing)
❶❸	24 757 09-S	1	Repair Kit (Accelerator Pump Diaphragm)

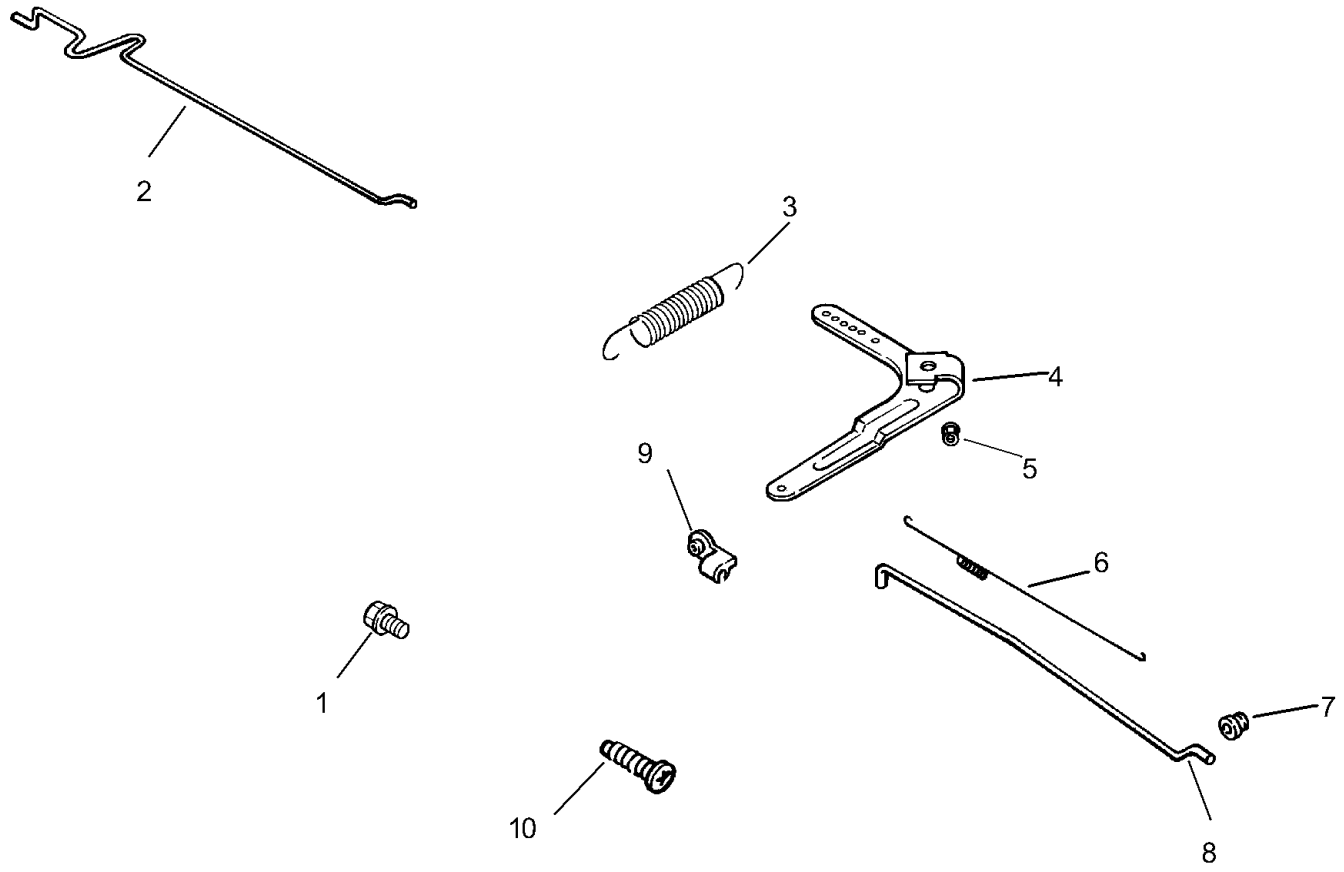

Engine Control Assembly
Kohler CH23-76548

Ref	Part No.	Qty.	Description
❸1	M-645016-S	4	Screw-HF (M6X1.0X16)
❸2	24 079 02-S	1	Linkage-Choke
❸3	24 089 15-S	1	Spring-Governor
❸4	24 090 33-S	1	Lever-Governor
❸5	M-641060-S	1	Nut-HF
❸6	24 089 01-S	1	Spring-Linkage
❸7	25 158 08-S	1	Bushing-Retaining, Linkage
❸8	24 079 01-S	1	Linkage-Throttle
❸9	25 158 11-S	1	Bushing-Retaining, Linkage
❸10	24 211 03-S	1	Bolt-Square Neck, Round Head
❶❸	25 454 03-S	1	Tie-Cable

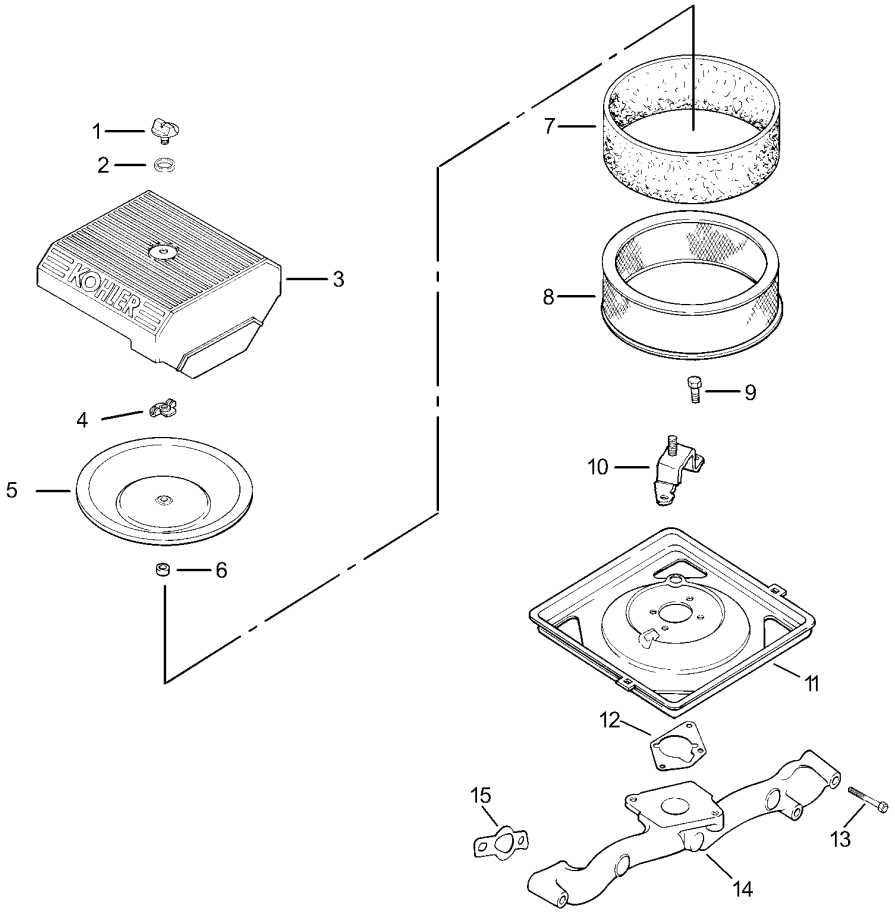

Air Intake / Filtration Assembly
Kohler CH23-76548

Ref	Part No.	Qty.	Description
❸1	25 341 03-S	1	Knob-Cover
❸2	24 153 20-S	1	Seal
❸3	24 096 67-S	1	Cover-Cleaner, Air
❸4	12 100 01-S	1	Nut-Wing
❸5	24 096 01-S	1	Cover-Air Cleaner, Inner
❸6	230046-S	1	Seal
❸7	24 083 05-S	1	Element-Precleaner
❸8	24 083 03-S	1	Element-Cleaner, Air
❸9	M-645016-S	3	Screw-HF (M6X1.0X16)
❸10	24 126 88-S	1	Bracket-Air Cleaner
❸11	24 094 11-S	1	Base, Air Cleaner
❸12	24 041 06-S	1	Gasket-Base, Air Cleaner
❸13	25 086 84-S	4	Screw-HF (M6X1.0X55)
❸14	24 164 14-S	1	Manifold-Intake
❸15	24 041 01-S	2	Gasket-Manifold, Intake

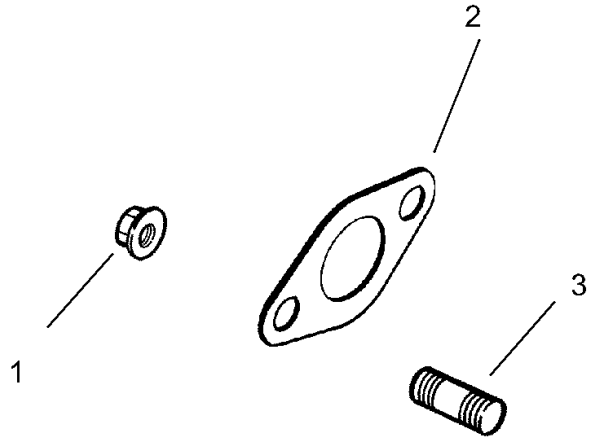

Exhaust Assembly
Kohler CH23-76548

Ref	Part No.	Qty.	Description
❸1	M-841080-S	4	Nut-HF (M8X1.25)
❸2	24 041 02-S	2	Gasket-Exhaust
❸3	25 072 04-S	4	Stud (M8X1.25X33)
❶❸	24 755 107-S	1	Gasket Set

Attachments and Accessories

For 07363 - Workman 3100 with Bed

Product Name	Model/Part
Fold Down Side Kit	07303
Cab Kit with Doors, 2004 and After Heavy-Duty Workman	07319
2/3 Area Flatbed	07321
2/3 Area Flatbed Side Kit	07322
Bed Liner	07331
1/3 Area Flatbed	07341
1/3 Area Stake Side Kit	07342
1/3 Area Platform Lift	07344
Rear PTO Kit	07419
Hand Throttle Kit, 2004 and After Heavy-Duty Workman	07420
Spiker	08856
Finish Grader	08867
Tachometer Kit, 2004 and After Air-Cooled Heavy-Duty Workman	107-7977
Signal Light Kit, 2004 and After Heavy-Duty Workman	107-7985
Accessory Wire Harness Kit, 2004 and After Heavy-Duty Workman	107-7987
Work Light Kit, 2004 and After Heavy-Duty Workman	107-7988
Remote Hydraulics Float Kit, 2004 and After Heavy-Duty Workman	107-8004
Backup Alarm Kit, 2004 and After Heavy-Duty Workman	107-8037
Side Mirror Kit	107-8048
Arrestor-Spark	108-3108
Single Nozzle Kit	41024
Hose Reel Kit	41097
Spray Gun Kit	41133
Pro Foam Concentrate (4 X 1 Gallon)	41157
Foam Marker Kit	41228
Workman 200 Spray System	41229
Enclosed Boom	41355
Enclosed Walking Boom	41358
Enclosed Walking Boom Trailer	41359
Enclosed Boom Mount, Workman 200 Spray System	41363
Power Holster Hitch Kit	44209
Drawbar Kit	44212
Hitch Frame and Draw Bar Kit	44213
Topdresser 1800	44225
Fifth Wheel Hitch Kit	44230
Core Harvester Adapter Kit	44242
Rear Tire And Wheel ASM	87-5370
23in Rear Fender Kit	87-5420
24in Rear Fender Kit	87-5430
Tire-Rear	87-6740
Speedometer Tachometer Kit, Workman Vehicles	87-9960
1/3 Area Tool Box Mounting Kit	92-1219
Automatic Tailgate Release Kit	92-1220
Block-Fuse	92-2641
PTO Over Running Clutch Kit	92-2655
Lift Kit, Topdresser 1800	92-4452
Mid-Mount Kit for Platform Lift	93-3741
1/3 Area Cover Kit	93-9225
Rear 1/3 Area Mounting Kit	93-9249
Tire-Front	94-3809
Tire-Front	94-5261
Rear Wheel ASM	98-2978

Attachments and Accessories (continued)

For 07363 - Workman 3100 with Bed

Product Name	Model/Part
Wheel And Tire Kit	98-2992
Tire-Rear	98-2993
Tire-Rear, Industrial	99-1091
Rear Tire ASM	99-1093

NOTES

NOTES

TORO®