FORM NO. 3313-297

TORO®

MODEL NO. 26624-8000001 & UP

PARTS CATALOG

21" KEY-LECTRIC REAR BAGGER

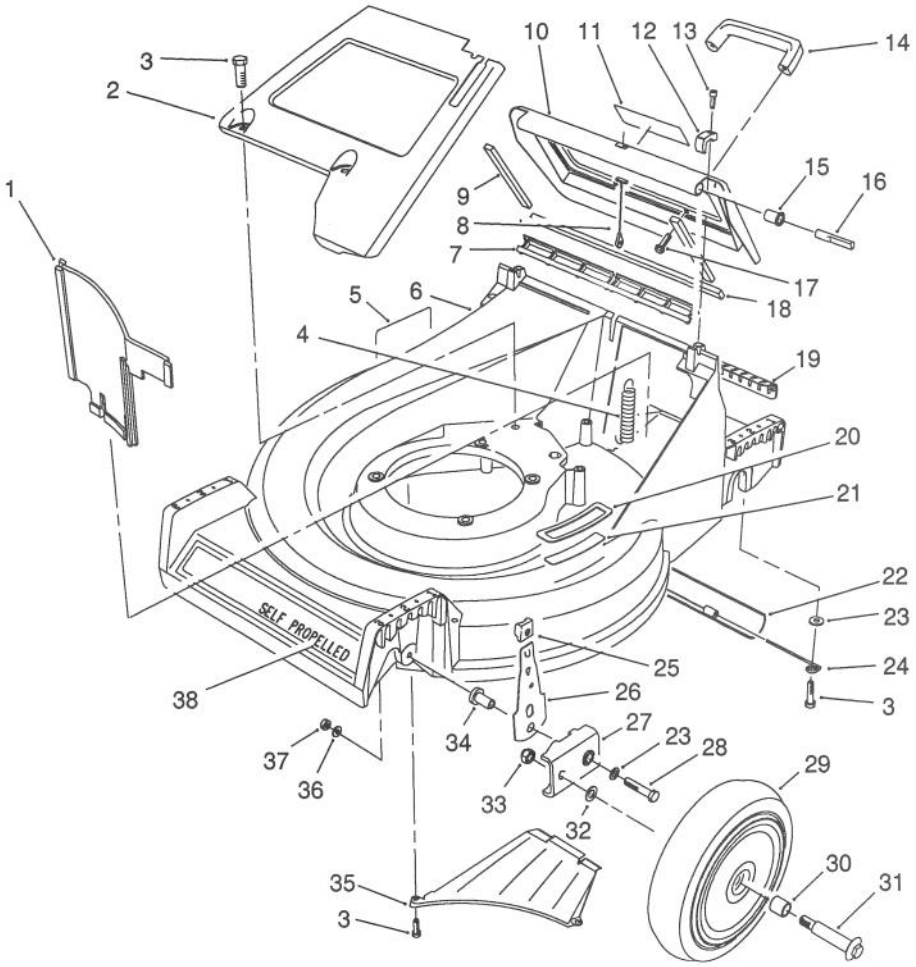

TORO.65.5420.1

HOUSING ASSEMBLY

Ref. No.	Part No.	Description	No. Used
1	66-0020	Panel - Vertical	1
2	65-5660	Panel - Screen	1
3	32144-70	Screw - Cap Hex. Hd.	6
4	65-5360	Spring - Extension	1
5	43-8480	Decal - Danger	1
6	62-6700	Housing - 21"	1
7	65-5160	Seal - Door	1
8	65-5370	Cable - Door	1
9	65-5480	Seal - Door Side	2
10	65-5050	Door - Discharge	1
11	63-9050	Decal - Warning	1
12	65-5140	Clamp - Hinge	2
13	65-5210	Screw - Hex. Socket Hd.	2
14	65-5100	Handle - Door	1
15	65-5460	Bushing - Door	2

Ref. No.	Part No.	Description	No. Used
16	65-5290	Pin - Hinge	2
17	46-8091	Screw - Handle	2
18	65-5490	Seal - Door - End	1
19	65-5150	Cover - Access	1
20	66-0110	Pad - Step	1
21	46-7370	Decal - Step Pad	1
22	65-5350	Shield - Trailing	1
23	3256-2	Washer - Flat	4
24	66-0150	Hanger - Shield L.H.	1
*	66-0140	Hanger - Shield R.H.	1
25	25-7740	Knob - Spring Arm	2
26	65-5400	Arm - Front Spring	2
27	47-2940	Arm - Front Pivot	2
28	322-32	Screw - Cap Hex. Hd.	2

*Not Illustrated

© The TORO Company - 1988

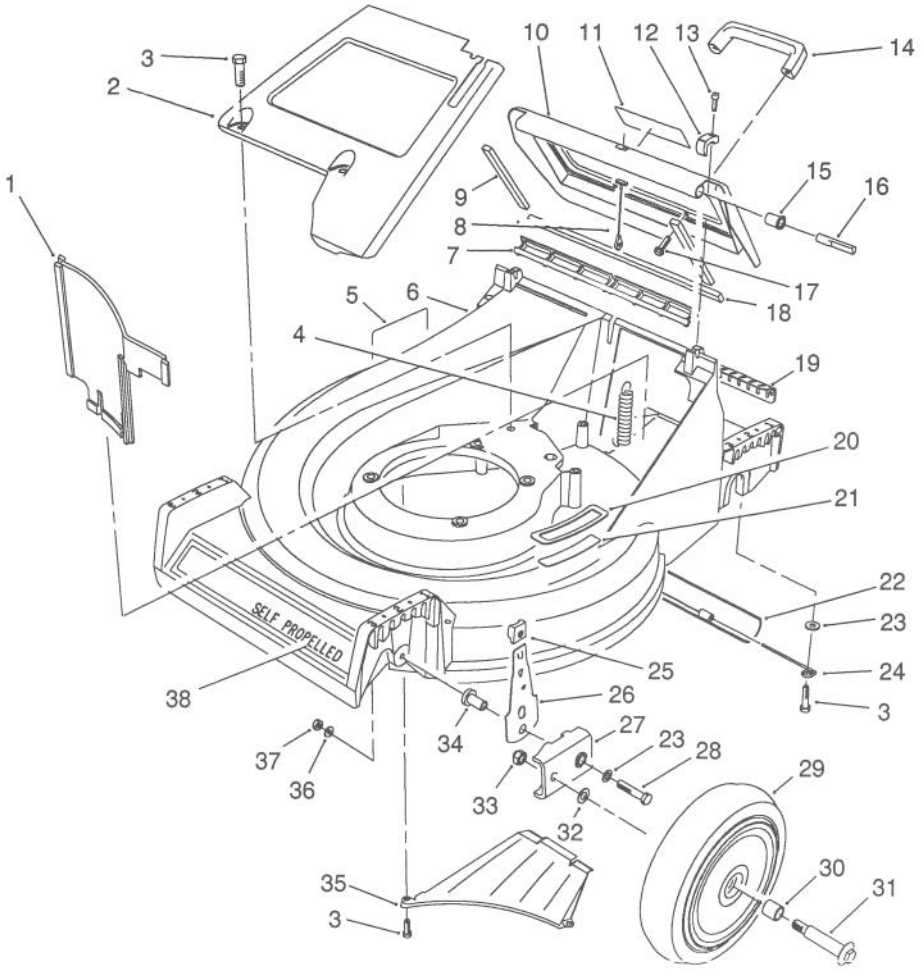

TORO.65.5420.1

HOUSING ASSEMBLY (Continued)

Ref. No.	Part No.	Description	No. Used
29	51-2750	Wheel & Tire Assembly (Incl. Ref. #30)	2
30	27-6250	Bushing - Wheel	4
31	27-6231	Bolt - Wheel	2
32	40-1940	Washer - Wheel	2
33	52-3620	Nut - Lock	2

Ref. No.	Part No.	Description	No. Used
34	65-5080	Bushing	2
35	65-5010	Ramp - Discharge	1
36	3290-456	Washer - Belleville	2
37	3296-29	Nut - Lock	2
38	65-5640	Decal - 21"	1

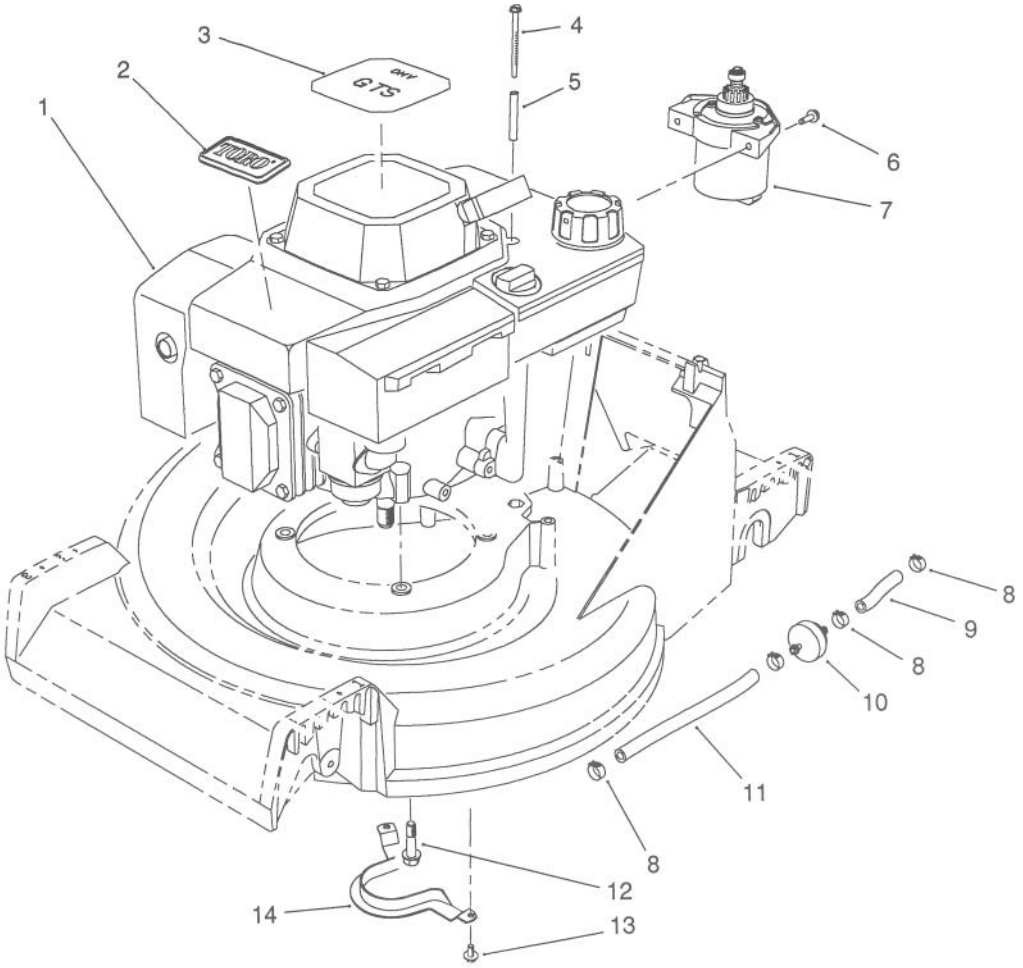

TORO.65.5420.2

ENGINE ASSEMBLY

Ref. No.	Part No.	Description	No. Used
1	81-5270	Engine - OHV	1
2	46-8290	Plate - TORO Logo	1
3	55-8070	Decal - Recoil	1
4	56-6610	Screw - Thread Forming	2
5	57-3830	Spacer - Tubular	2
6	56-6380	Screw - Thread Forming	2
7	53-4500	Starter Motor Assembly	1
8	2412-95	Clamp - Fuel Line	4

Ref. No.	Part No.	Description	No. Used
9	51-3211	Line - Fuel	1
10	56-6360	Filter - Fuel	1
11	51-3214	Line - Fuel	1
12	11-0590	Screw - Cap Hex. Hd.	4
13	32144-4	Screw - Cap Hex. Hd.	2
14	40-5720	Guide Belt	1
*	56-6680	Tube - Oil Drain	1

*Not Illustrated

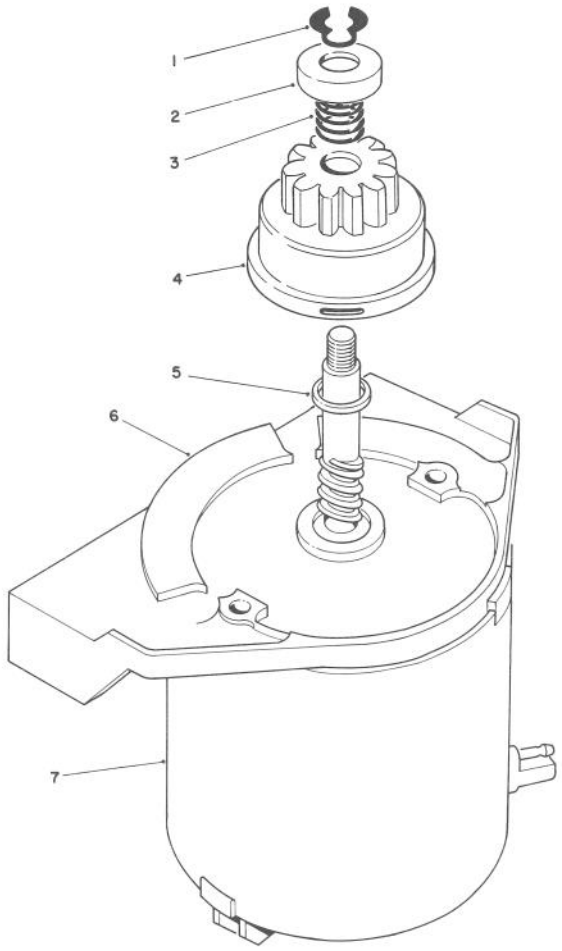

STARTER MOTOR ASSEMBLY

Ref. No.	Part No.	Description	No. Used
1	32151-47	Ring - Retaining	1
2	49-2170	Pinion - Stop	1
3	44-0500	Spring - Compression	1
4	43-4370	Pinion Assembly	1
5	23-9591	Spacer	1
6	53-4460	Frame - End	1
7	53-4500	Starter Motor Assembly (Incl. Ref. #1-6)	1

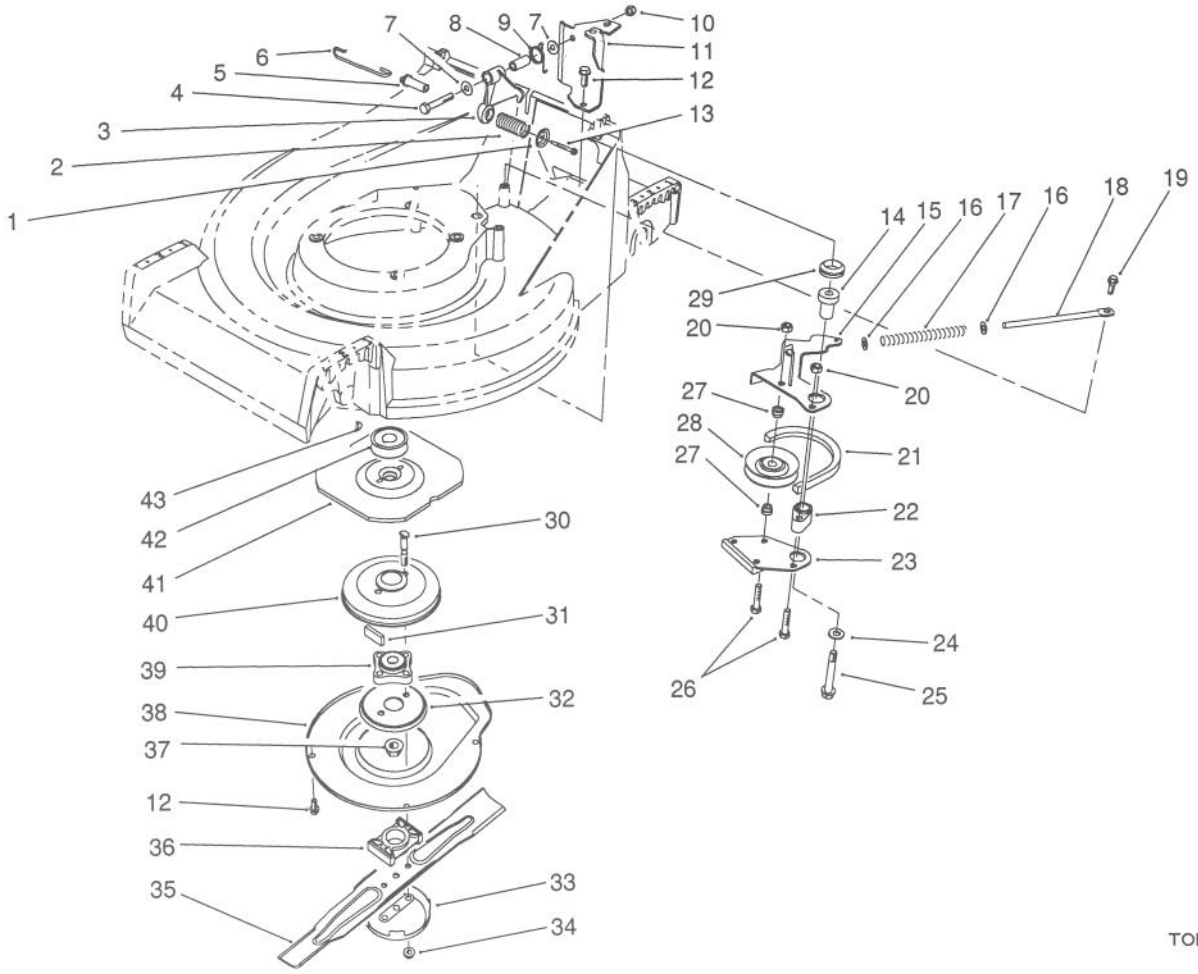

TORO.65.5420.3

BLADE BRAKE CLUTCH ASSEMBLY

Ref. No.	Part No.	Description	No. Used
1	65-5280	Retainer - Spring	1
2	65-5260	Spring - Compression	1
3	65-5700	Crank	1
4	322-21	Screw - Cap Hex. Hd.	1
5	65-5310	Pin - BBC Spring	1
6	65-5470	Link - Control	1
7	3256-2	Washer - Flat	2
8	65-5690	Bushing - Bellcrank	1
9	66-0200	Spring - Torsion	1
10	32128-44	Nut - Lock	1
11	66-0030	Bracket - Cable Support	1
12	32144-70	Screw - Cap Hex. Hd.	5
13	46-7040	Screw - Cap Hex. Hd.	1
14	65-5720	Bushing - BBC	1
15	66-0090	Lever - Brake	1
16	65-5390	Washer - Flat	2
17	65-5270	Spring - Compression	1
18	65-5320	Rod - Brake Spring	1
19	65-5670	Bolt - Shoulder	1
20	3296-56	Nut - Lock	2
21	65-5740	Belt - BBC	1
22	65-5070	Hub - Brake Plate	1

Ref. No.	Part No.	Description	No. Used
23	65-5780	Brake Plate Assembly	1
24	65-5380	Washer	1
25	11-0580	Screw - Cap Hex. Hd.	1
26	321-13	Screw - Cap Hex. Hd.	2
27	65-5130	Hub - Idler Pulley	2
28	46-5650	Idler Pulley Assembly	1
29	253-151	Seal - V-Ring	1
30	42-3190	Screw - BBC	2
31	52-3480	Dampner - Vibration	2
32	65-5330	Screen - BBC	1
33	42-0910	Cup - Anti-Scalp	1
34	54-9190	Nut - Flange Lock	2
35	62-7700	Blade - 21"	1
36	62-4280	Spacer - Blade	1
37	3296-33	Nut - Lock	1
38	65-5200	Cover - BBC	1
39	42-6890	Hub Assembly	1
40	62-3890	Drum - Brake	1
41	65-5300	Flywheel - BBC	1
42	62-7560	Pulley - Engine	1
43	3257-3	Key - Woodruff	1

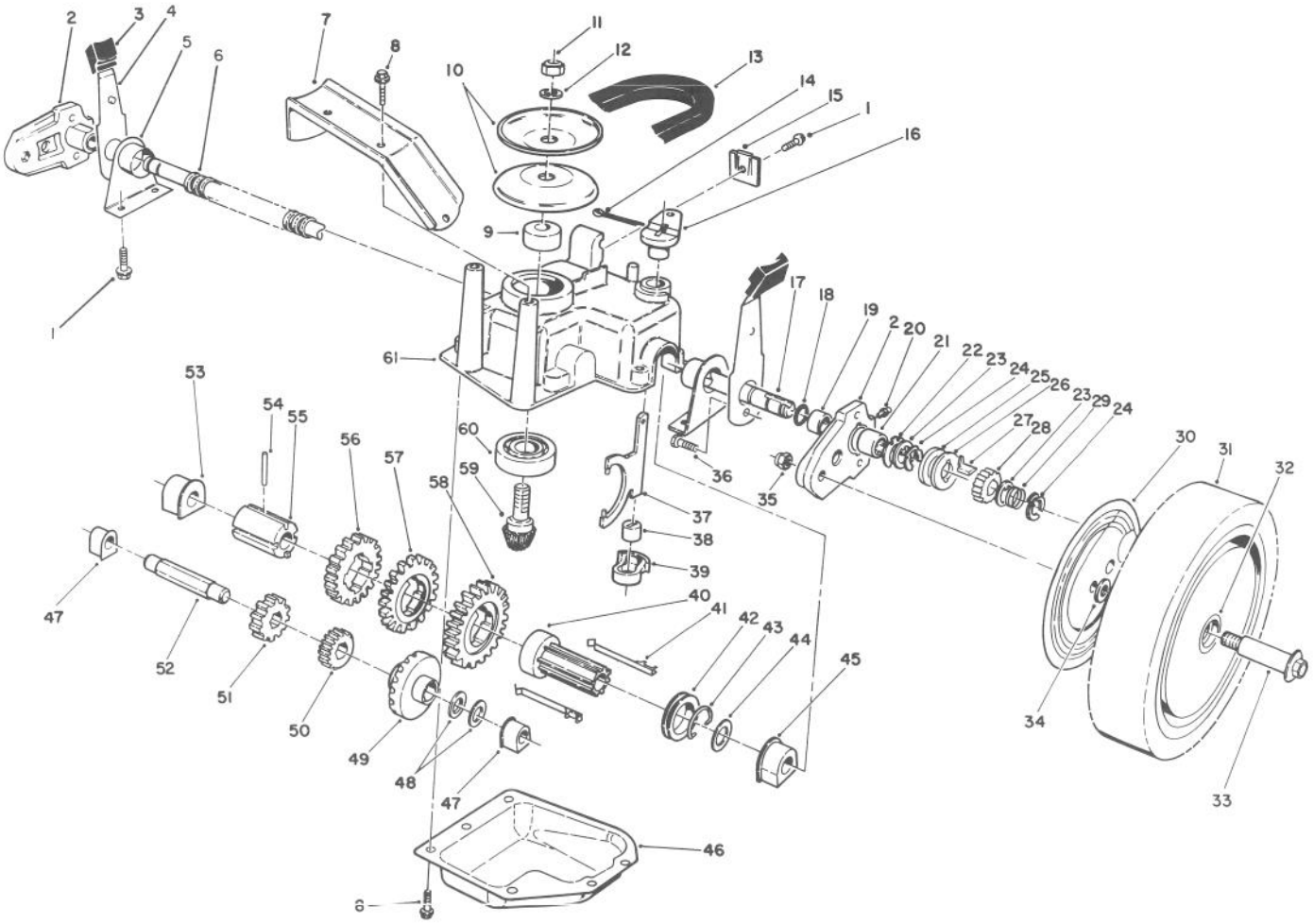

GEAR CASE ASSEMBLY

Ref. No.	Part No.	Description	No. Used
1	32144-70	Screw - Hex. Washer Hd.	3
2	65-5040	Pivot Arm Assembly (Incl. Ref. #19-21)	2
3	25-7740	Knob - Arm	2
4	65-5440	Spring Arm Assembly	2
5	65-5750	Cap - End	2
6	24-7922	Cover - Drive Shaft	1
7	65-5190	Bracket - Belt Guide	1
8	49-2040	Screw - Self Tapping	8
9	62-6660	Spacer	1
10	60-8840	Pulley Half	2
11	3296-5	Nut - Lock	1
12	3256-24	Washer - Flat	1
13	66-0210	V-Belt	1
14	3272-5	Pin - Cotter	1
15	46-5610	Clamp - Cable	1
16	60-8880	Lever - Shift	1
17	65-4770	Shaft - Output	1
18	237-153	Seal - O-Ring	2
19	47-2900	Bushing	2
20	302-56	Fitting - Grease	2
21	48-2060	Bearing - Needle	2
22	65-4730	Washer - Thrust (Inner)	2

Ref. No.	Part No.	Description	No. Used
23	65-4740	Washer - Thrust (Keyed)	4
24	65-2720	Ring - Retaining	4
25	65-4710	Ring - Friction	2
26	65-4760	Washer - Clutch	2
27	66-6050	Key - Rocking L.H.	1
*	66-6040	Key - Rocking R.H.	1
28	65-4750	Pinion	2
29	65-4720	Spring - Compression	2
30	63-5270	Cover - Wheel	2
31	51-2740	Wheel Tire & Gear Assy. (Incl. Ref. #32)	2
32	27-6250	Bushing - Wheel	4
33	27-6231	Bolt - Wheel	2
34	40-1940	Washer - Wheel Bolt	4
35	52-3620	Nut - Lock	2
36	65-5220	Screw - Cap Socket Hd.	2
37	60-8870	Yoke - Shift	1
38	29-9570	Bushing - Yoke	1
39	60-8810	Retainer - Shift Fork	1
40	60-8780	Sleeve - Shift Key	1
41	65-5230	Key - Shift	2
42	60-8760	Collar - Shift	1
43	65-5250	Clip - Spring	1

*Not Illustrated

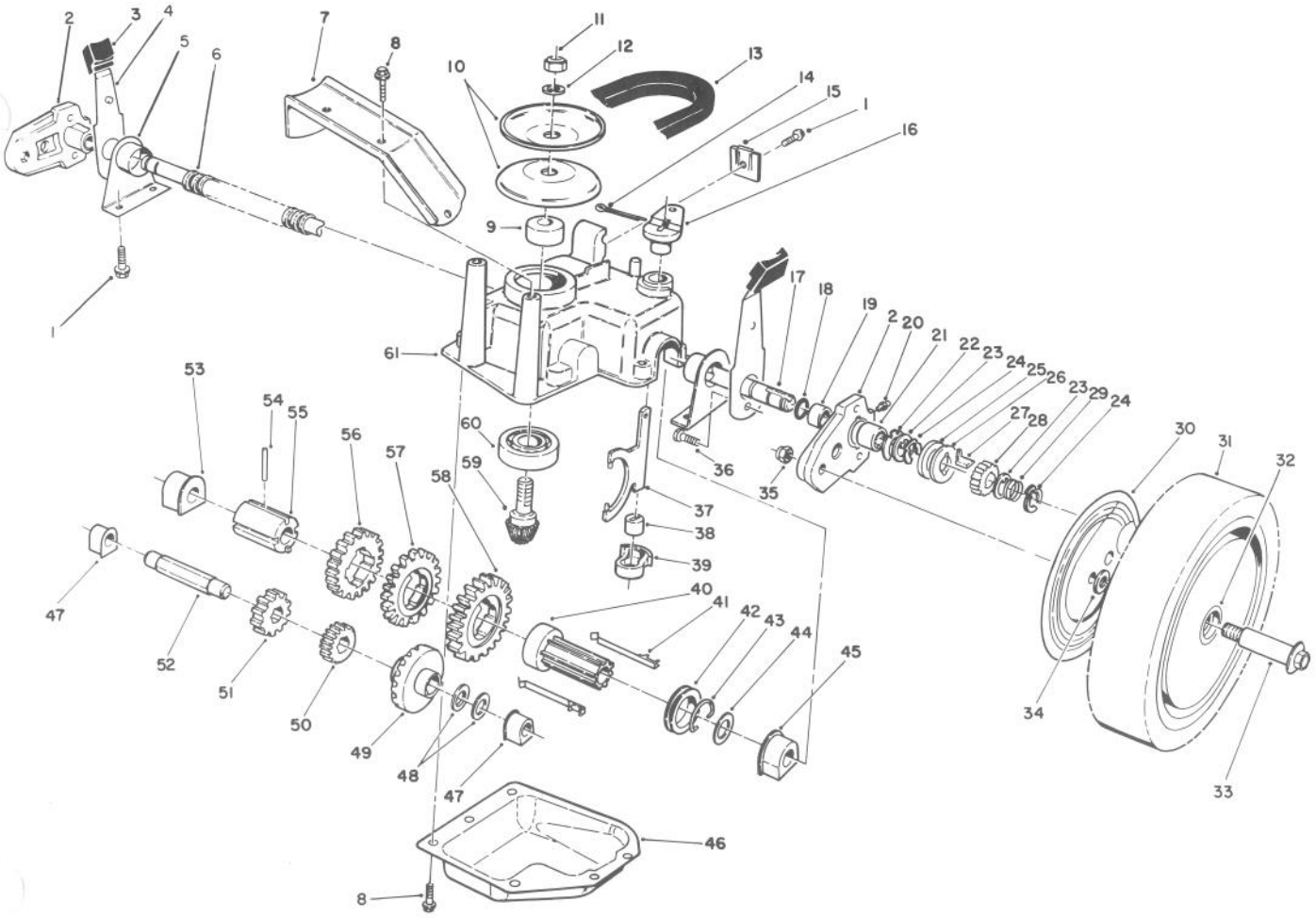

GEAR CASE ASSEMBLY (Continued)

Ref. No.	Part No.	Description	No. Used
44	36-4780	Washer - Thrust	1
45	60-8770	Bushing - Output Shaft	1
46	60-8730	Cover - Gear Case	1
47	60-8750	Bushing - Intrmdt. Shaft	2
48	36-4791	Washer - Thrust	2
49	55-3760	Gear - Pinion 15 T.	1
50	55-3780	Gear - Pinion 20 T.	1
51	55-3800	Gear - Pinoin 25 T.	1
52	60-8800	Shaft - Intermediate	1
53	60-8850	Bushing - Output Shaft	1

Ref. No.	Part No.	Description	No. Used
54	32121-120	Pin - Coil	1
55	60-8790	Sleeve - Gear	1
56	55-3810	Gear - 39 T. (3rd Gear)	1
57	55-3790	Gear - 44 T. (2nd Gear)	1
58	55-3770	Gear - 49 T. (1st Gear)	1
59	60-8890	Pinion - Bevel	1
60	38-7820	Bearing - Ball	1
61	60-8710	Gear Case - Upper	1
*	62-6672	Gear Case Assy. Complete	1

*Not Illustrated

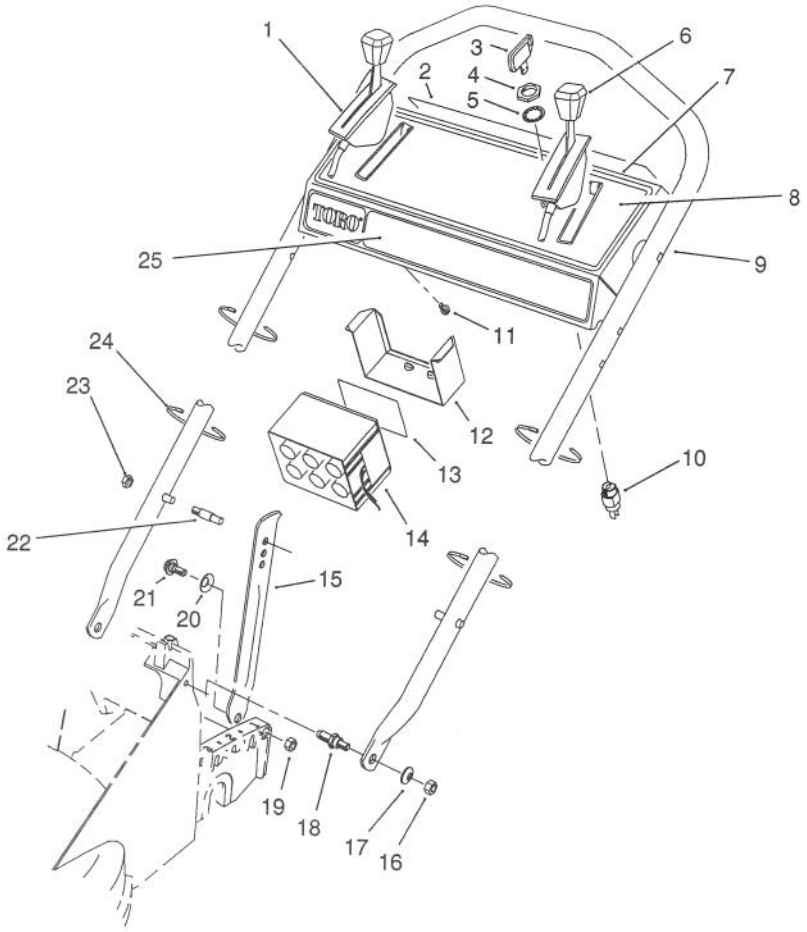

TORO.65.542(

HANDLE ASSEMBLY

Ref. No.	Part No.	Description	No. Used
1	65-5530	Control - Ground Speed Bend Type #3 Sheath Lg. 51-1/4" Wire Lg. 2-1/8"	1
2	63-9060	Decal - Danger	1
3	62-7770	Key - Ignition	1
4	218-461	Nut - Lock	1
5	3254-5	Washer - Lock	1
6	66-0230	Control - Throttle Bend Type #2 Sheath Lg. 44-3/4" Wire Lg. 2-1/2"	1
7	65-5760	Panel - Control	1
8	63-9040	Decal - Instruction	1
9	65-5770	Handle	1
10	46-5780	Switch - Starter (Incl. Ref. #4-5)	1

Ref. No.	Part No.	Description	No. Used
11	32104-76	Screw - Self Tapping	4
12	55-8180	Retainer - Battery	1
13	55-8190	Decal - Instructions	1
14	55-7520	Battery	1
15	65-5730	Latch - Handle	2
16	3296-66	Nut - Lock	2
17	3290-456	Washer - Belleville	2
18	65-5090	Screw - Shoulder Stud	2
19	3296-29	Nut - Lock	2
20	3290-478	Washer - Belleville	2
21	65-5180	Screw - Shoulder	2
†22	49-2750	Pin - Handle	2
†23	3296-47	Nut - Lock	2
24	3290-378	Tie - Cable	5
25	65-5650	Decal - TORO	1
*	49-8312	Harness - Wire	1
*	6-9780	Charger - Battery	1

*Not Illustrated
†Service Replacement Parts

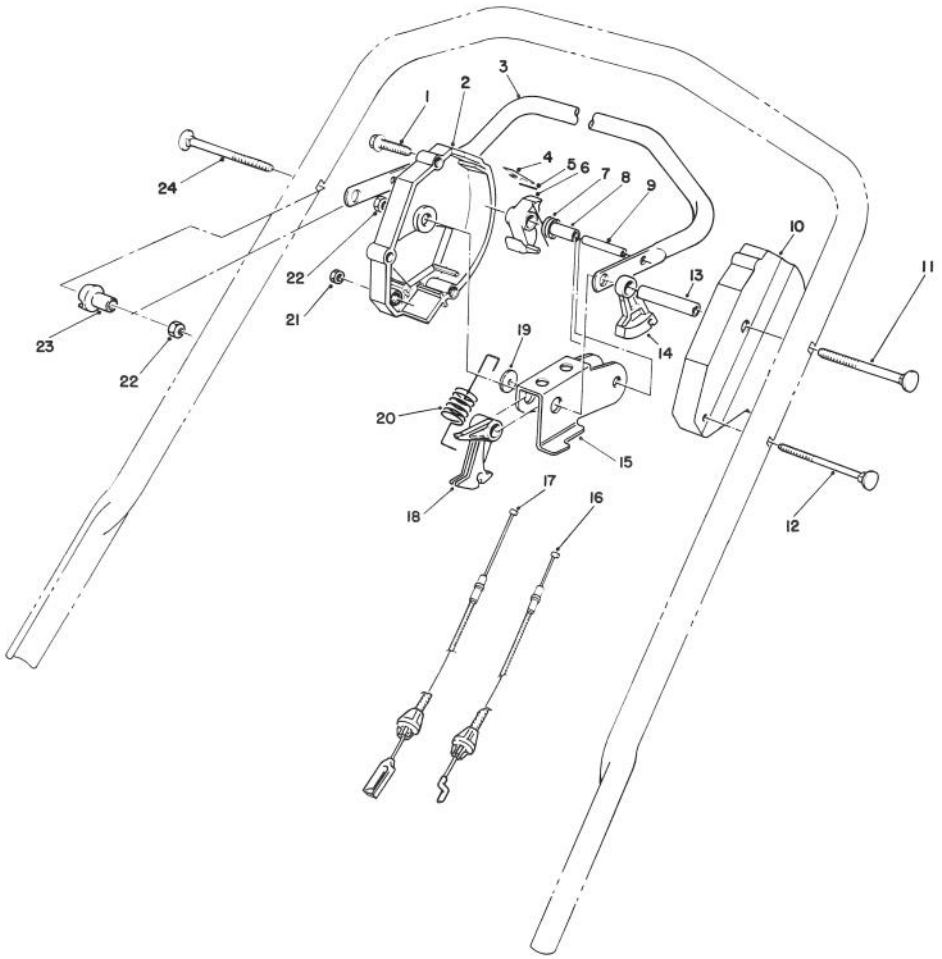

TRACTION CONTROL ASSEMBLY

Ref. No.	Part No.	Description	No. Used
1	46-7040	Screw - Hex. Washer Hd.	3
2	66-0160	Housing - Control R.H.	1
3	52-7430	Control Bar Assembly	1
4	52-7410	Spring - Leaf	1
5	57-6290	Pin - Insert	1
6	46-5530	Hook - Control	1
7	46-5510	Spring - Torsion	1
8	46-5550	Bushing - P.M.	1
9	32121-9	Pin - Coil	1
10	46-5460	Housing - Control L.H.	1
11	17-9422	Screw - Handle	1
12	46-6431	Screw - Handle	1

Ref. No.	Part No.	Description	No. Used
13	46-5590	Spacer	1
14	46-5520	Lever - Traction	1
15	66-0180	Rocker	1
16	65-5520	Cable - Traction	1
17	65-5510	Cable - Clutch	1
18	46-5540	Lever - Cable	1
19	66-0170	Washer - Nylon	1
20	66-0190	Spring - Detent	1
21	3296-8	Nut - Lock	1
22	3296-58	Nut - Lock	2
23	49-1630	Support - Spacer	1
24	17-9421	Screw - Handle	1

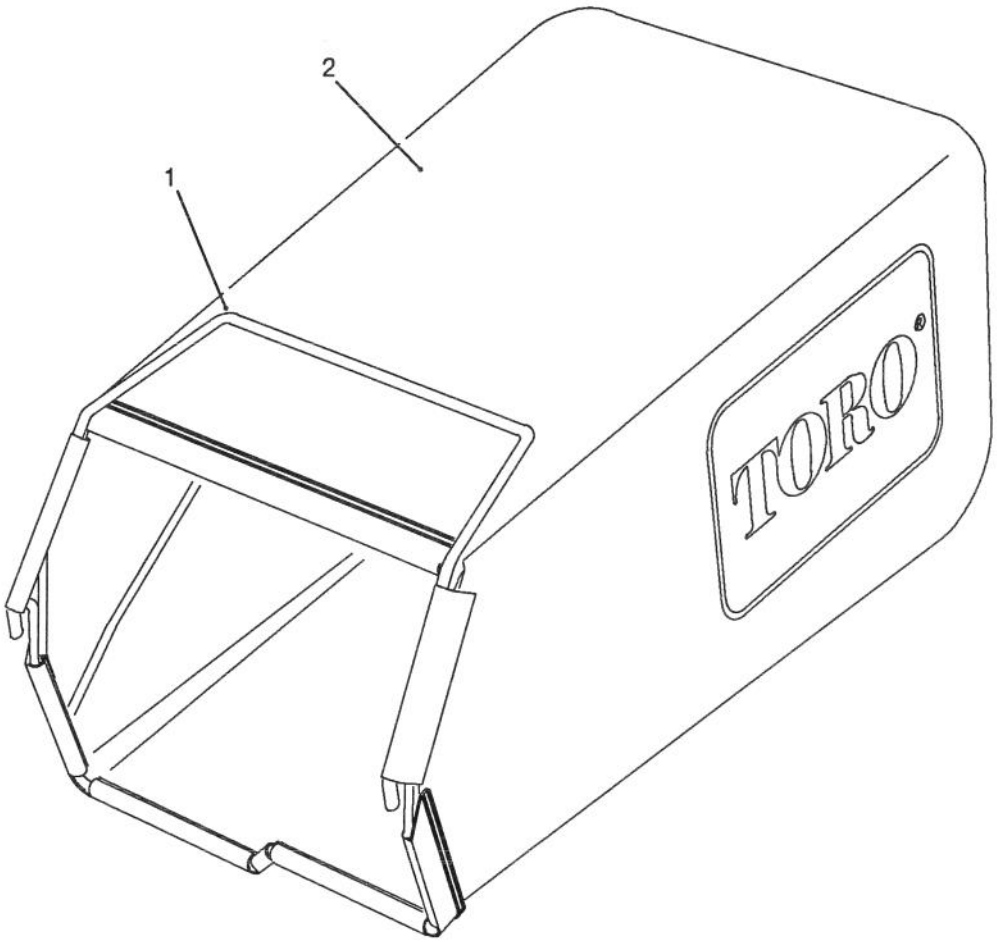

GRASS BAG ASSEMBLY

Ref. No.	Part No.	Description	No. Used
1	65-5540	Frame - Grass Bag	1

Ref. No.	Part No.	Description	No. Used
2	66-0010	Bag	1

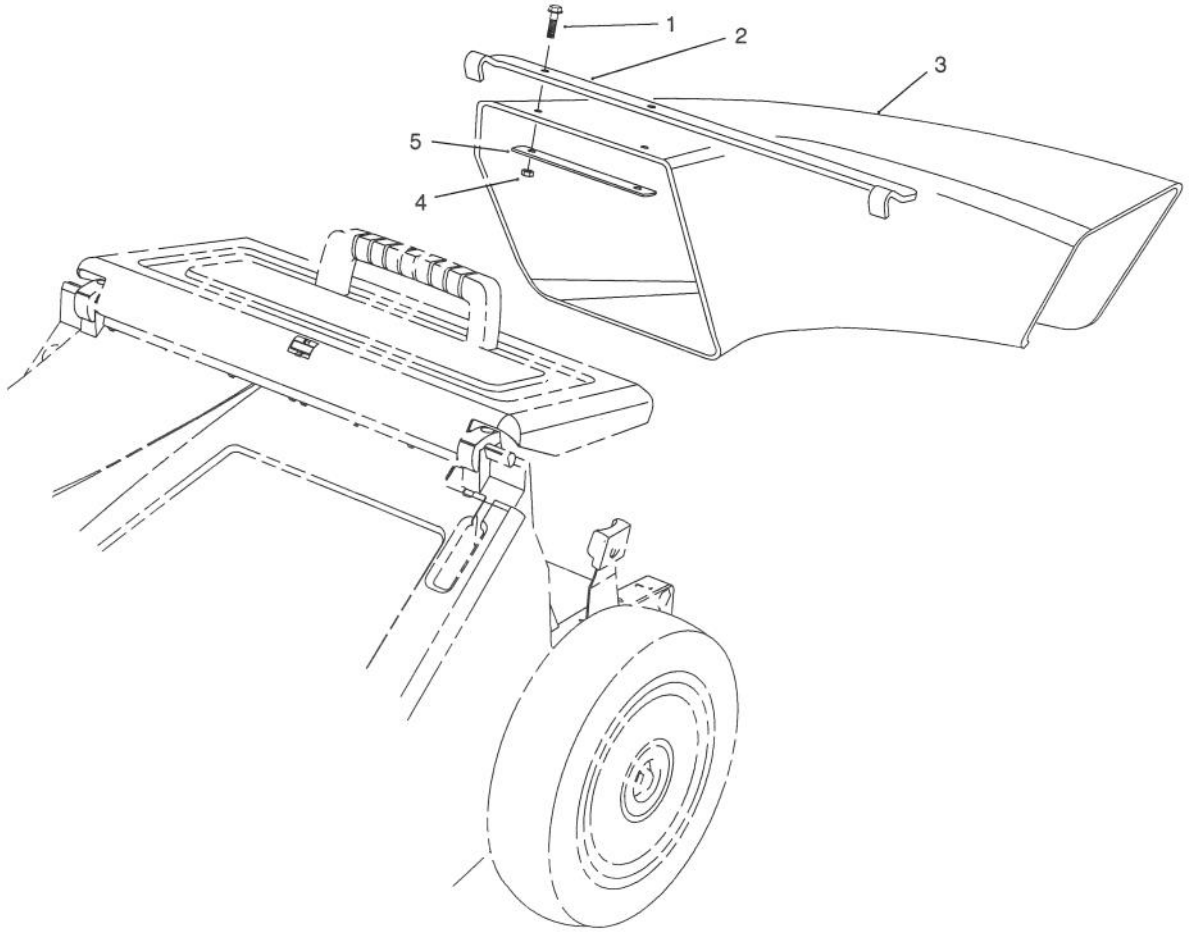

I.13.297.8

SIDE DISCHARGE CHUTE MODEL NO. 59112 (Optional)

Ref. No.	Part No.	Description	No. Used
1	3290-126	Screw - Hex. Washer Hd.	2
2	66-0070	Bracket - Chute Hanger	1
3	65-5240	Chute - Discharge	1

Ref. No.	Part No.	Description	No. Used
4	3296-12	Nut - Lock	2
5	66-0060	Plate - Stress	1

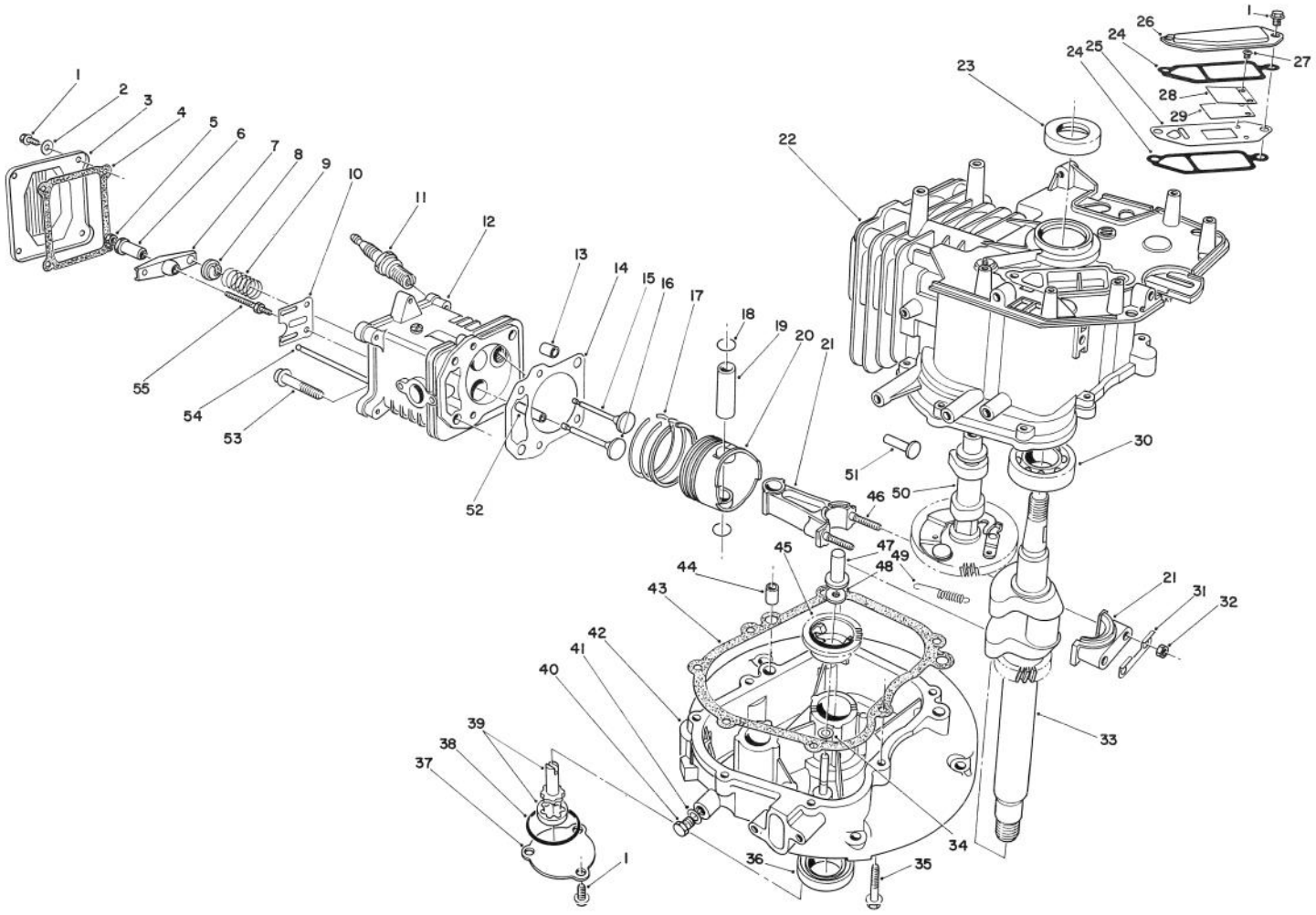

ENGINE ASSEMBLY (Model No. VMH7)

Ref. No.	Part No.	Description	No. Used
1	81-1170	Bolt	9
2	81-3790	Washer	4
3	81-3780	Cover - Rocker Arm	1
4	81-3770	Gasket - Cover	1
5	81-3760	Nut - Jam	2
6	81-3750	Pivot - Rocker Arm	2
7	81-3740	Arm - Rocker	2
8	81-3730	Retainer - Valve Spring	2
9	81-3720	Spring - Valve	2
10	81-3710	Guide - Push Rod	1
11	81-3250	Plug - Spark	1
12	81-3700	Head - Cylinder (Incl. Ref. #52)	1
*	81-3840	Cylinder Head Assembly (Incl. Ref. #1-10, 12, & 52-55)	1
13	81-3690	Pin - Dowel	2
14	81-4710	Gasket - Cylinder Head	1
*	81-3820	Gasket Set	1
15	81-3670	Valve - Intake	1
16	81-3660	Valve - Exhaust	1
17	81-3650	Piston Ring Set	1
18	50-0960	Circlip	2

Ref. No.	Part No.	Description	No. Used
19	81-3630	Pin - Piston	1
20	81-3620	Piston	1
21	81-3390	Connecting Rod Assembly (Incl. Ref. #31, 32 & 46)	1
22	81-3280	Block - Engine (Incl. Ref. #23 & 30)	1
23	81-3290	Seal - Upper Crankshaft	1
24	81-3300	Gasket - Breather	2
25		Plate - Breather	1
26	81-3320	Cover - Breather	1
27		Screw - Reed Valve	2
28		Retainer - Reed Valve	1
29		Valve - Reed	1
*	81-3370	Reed Valve Assembly (Incl. Ref. #25 & 27-29)	1
30	81-3380	Bearing - Ball	1
31	81-3400	Plate - Lock	1
32	50-0510	Nut	2
33	81-3430	Crankshaft	1
34	81-3440	Washer	1
35	81-3450	Bolt	7
36	50-0870	Seal - Lower Crankshaft	1
37	81-3470	Cover - Oil Pump	1

*Not Illustrated

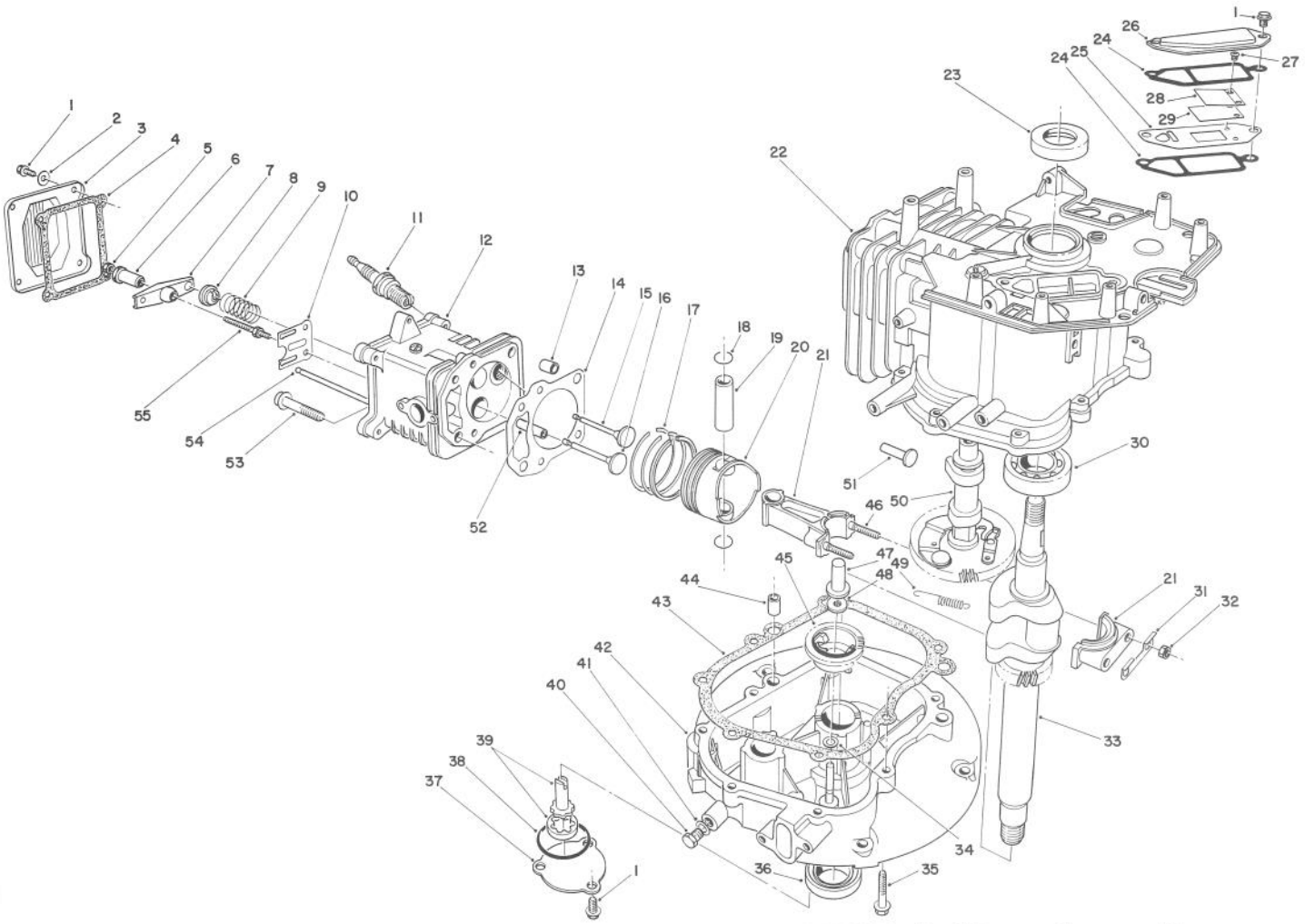

ENGINE ASSEMBLY (Model No. VMH7) (Continued)

Ref. No.	Part No.	Description	No. Used
38	81-3480	Seal - O-Ring	1
39	81-3490	Oil Pump Assembly	1
40	81-4970	Plug - Oil Drain	1
41	81-3510	Gasket - Oil Plug	1
42	81-3520	Crankcase - Lower	1
43	81-3530	Gasket - Crankcase	1
44	50-0450	Pin - Dowel	2
45	81-3550	Governor Flyweight Assy.	1
46	81-3610	Stud - Connecting Rod	2
47	81-3560	Plunger - Governor	1

Ref. No.	Part No.	Description	No. Used
48	81-3570	Washer	1
49	81-3580	Spring - Comp. Release	1
50	81-3590	Camshaft Assembly (Incl. Ref. #49)	1
51	81-3600	Tappet	2
52	81-3830	Guide - Valve	2
53	50-0190	Bolt	4
54	81-3810	Rod - Push	2
55	81-3800	Stud - Rocker Arm	2
*	12-2619	Short Block Assembly	1

*Not Illustrated

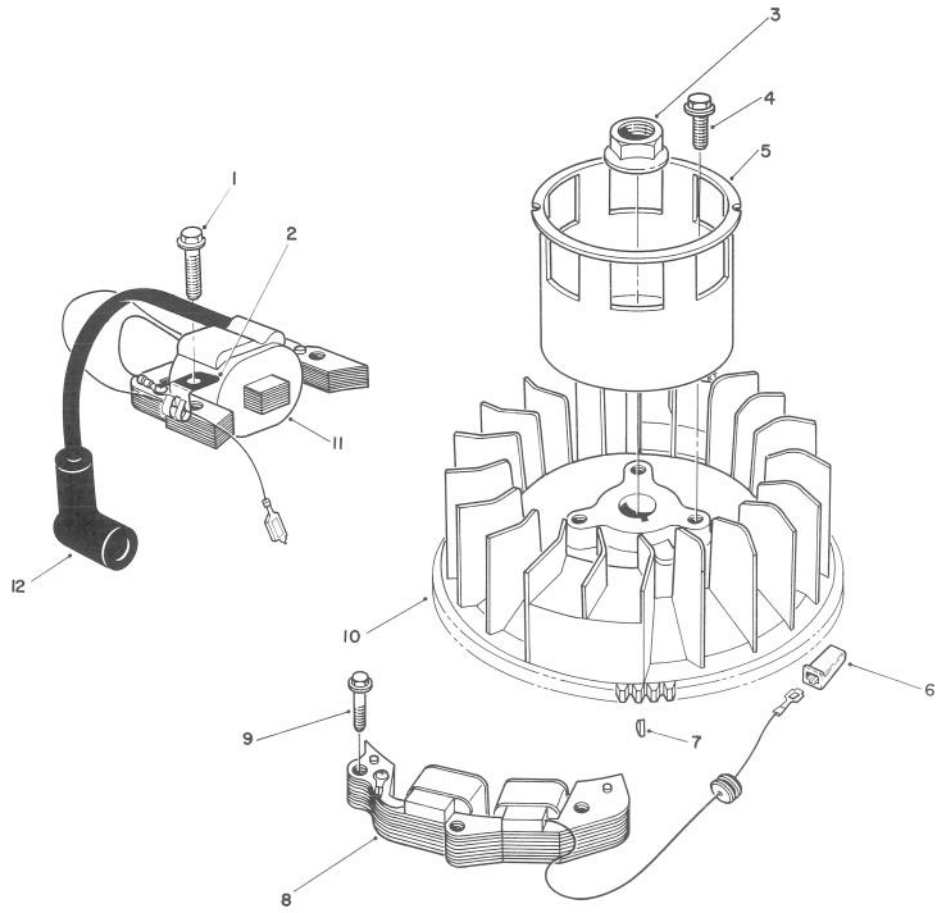

MAGNETO & FLYWHEEL ASSEMBLY (Model No. VMH7)

Ref. No.	Part No.	Description	No. Used
1	53-0860	Bolt	2
2	81-1480	Clamp	1
3	81-3890	Nut	1
4	81-1300	Bolt	3
5	81-3910	Cup - Starter	1
6	218-550	Connector - Wire	1

Ref. No.	Part No.	Description	No. Used
7	81-3930	Key - Flywheel	1
8	81-3940	Coil - Alternator	1
9	81-3950	Bolt	2
10	81-3920	Flywheel	1
11	81-3850	Magneto Coil Assembly	1
12	81-3860	Cover - Spark Plug	1

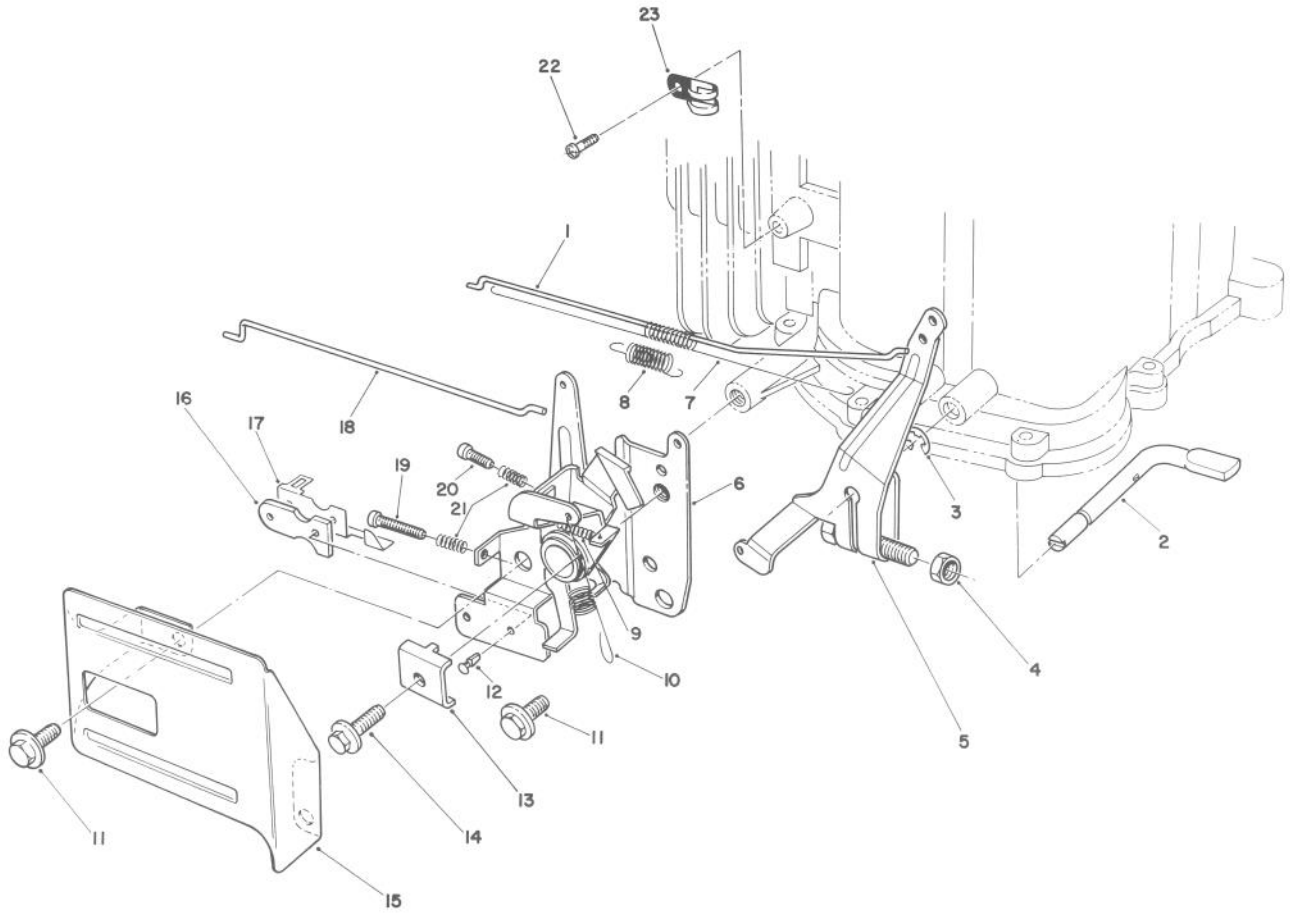

GOVERNOR ASSEMBLY (Model No. VMH7)

Ref. No.	Part No.	Description	No. Used
1	81-4450	Rod - Carburetor	1
2	81-4480	Shaft - Governor	1
3	81-4540	E-Ring	1
4	81-4490	Nut	1
5	81-4500	Governor Arm Assembly	1
6	81-4510	Throttle & Choke Control	1
7	81-4470	Spring - Carburetor Rod	1
8	81-4460	Spring - Choke Lever	1
9	81-4570	Spring	1
10	81-4520	Spring - Governor	1
11	81-1170	Bolt	2
12	81-4530	Rivet	2

Ref. No.	Part No.	Description	No. Used
13	81-1690	Clamp - Cable	1
14	50-0130	Bolt	1
15	57-5750	Guard - Throttle	1
16	81-1830	Insulator - Kill Switch	1
17	81-1840	Terminal - Switch	1
18	81-4440	Rod - Choke	1
19	81-4560	Screw	1
20	81-4550	Screw	1
21	81-2510	Spring	2
22	81-0380	Screw	1
23	81-4780	Clamp	1

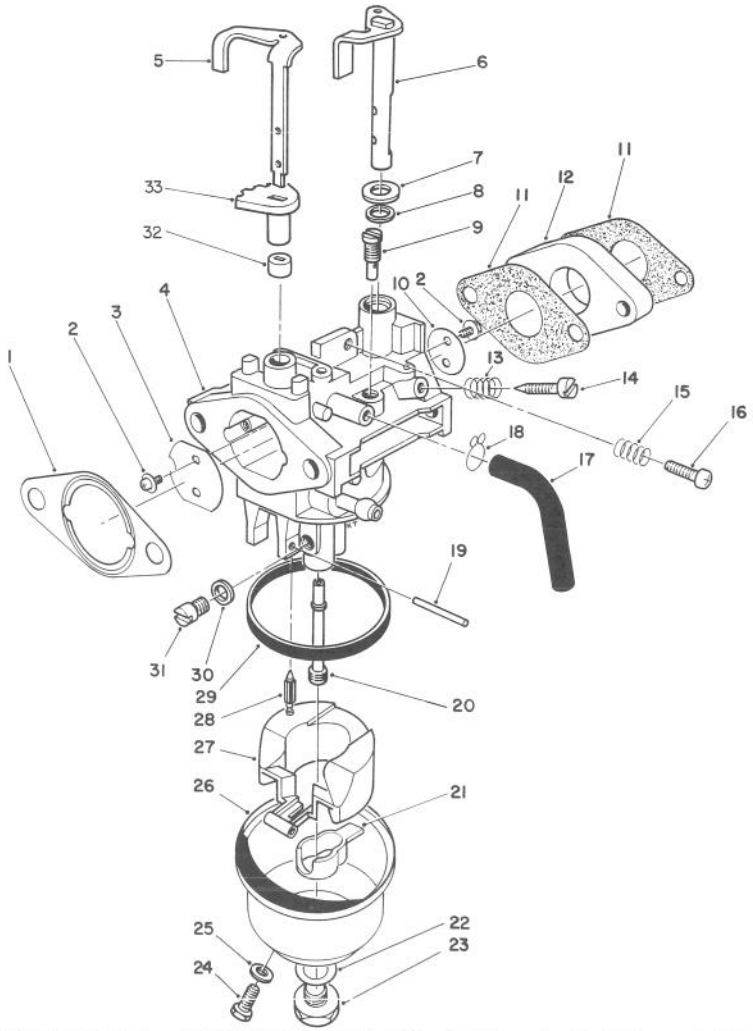

CARBURETOR ASSEMBLY (Model No. VMH7)

Ref. No.	Part No.	Description	No. Used
1	81-4250	Gasket - Air Cleaner	1
2	81-2710	Screw - Choke Valve	4
3	81-2720	Valve - Choke	1
4		Body - Carburetor	1
5	81-5500	Shaft - Choke Control	1
6	81-2920	Shaft - Throttle Valve	1
7	81-4280	Washer	1
8	81-4290	Seal - Throttle Shaft	1
9	81-1030	Jet - Pilot (#40)	1
10	81-2940	Valve - Throttle	1
11	81-2570	Gasket - Carburetor	2
12	81-0460	Block - Insulator	1
13	81-2580	Spring - Pilot Screw	1
14	50-2360	Screw - Pilot	1
15	81-4320	Spring - Idle Stop Screw	1
16	50-0250	Screw - Idle Stop	1
17	81-4310	Tube - Bowl Vent	1
18	81-4300	Clamp	1
19	81-0980	Pin - Hinge	1
20	81-4330	Nozzle - Main	1

Ref. No.	Part No.	Description	No. Used
21	81-4940	Spacer - Float	1
22	81-2650	Gasket - Bowl Screw	1
23	81-2660	Screw - Bowl	1
24	81-2670	Screw - Drain	1
25	81-2680	Gasket - Drain Screw	1
26	81-4340	Bowl - Float	1
27	81-4920	Float	1
28	81-4700	Needle	1
29	81-2630	Gasket - Float Bowl	1
30	81-4350	Spacer	1
31	50-4760	Jet - Main (#82.5)	1
*	81-1040	Jet - Main (#80 High Alt.)	1
32	81-5530	Ring - Choke Lower	1
33	81-5520	Ring - Choke Upper	1
*	81-4270	Choke Shaft Assembly (Incl. Ref. #5 & 32-33)	1
*	81-4890	Kit - Carburetor (Incl. Ref. #1, 11, 22, 25, 28 & 29)	1
*	81-4750	Carburetor Assembly (Incl. Ref. #2-33)	1

*Not Illustrated

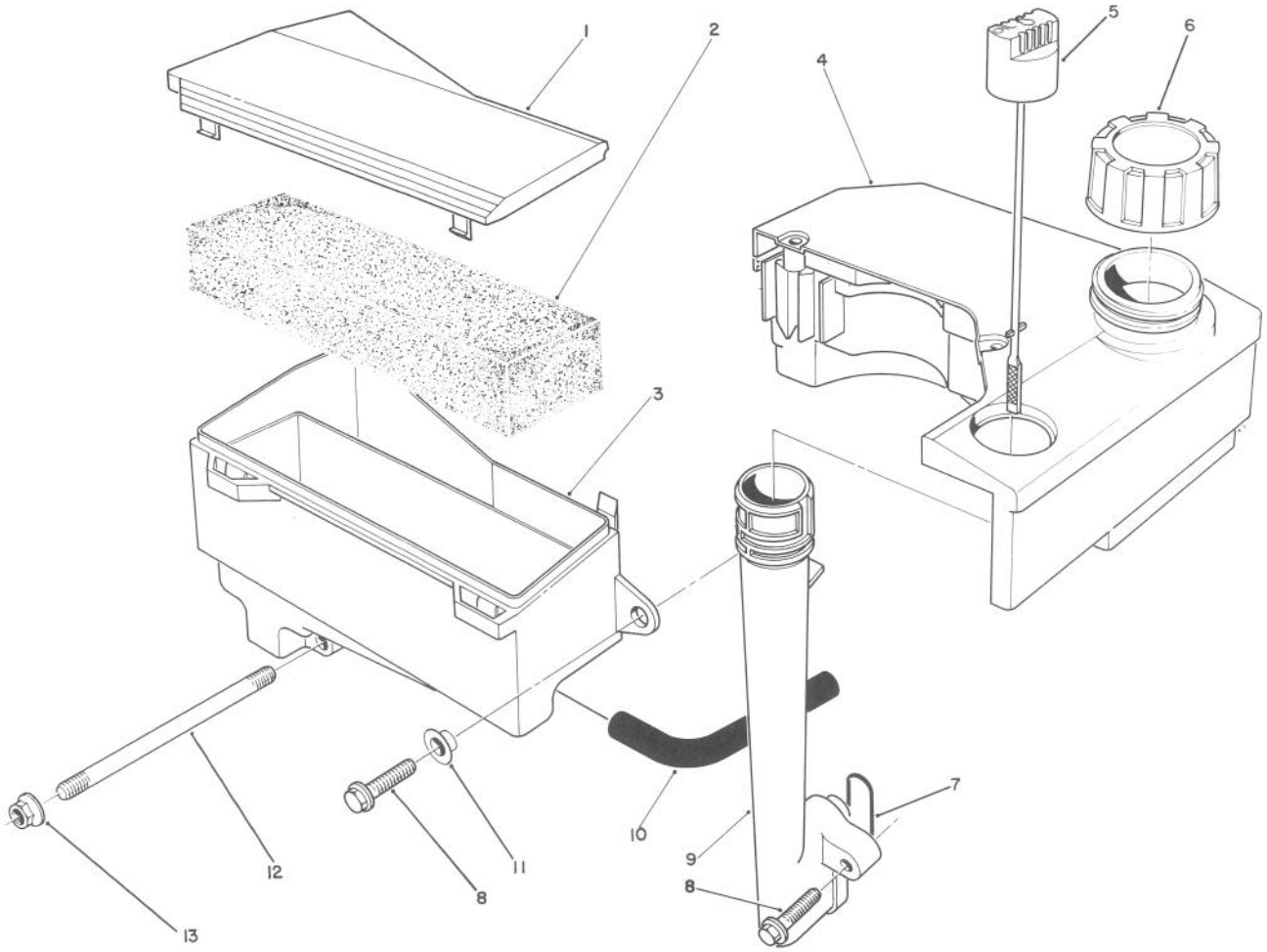

AIR CLEANER & FUEL TANK ASSEMBLY (Model No. VMH7)

Ref. No.	Part No.	Description	No. Used
1	81-4110	Cover - Air Cleaner	1
2	81-4120	Filter - Foam	1
3		Body - Air Cleaner	1
4	55-3530	Tank - Fuel	1
5	81-4140	Dipstick - Oil	1
6	55-3570	Cap - Gas	1
7	81-4150	Seal - Oil Tube	1
8	81-4160	Bolt	3
9	81-4170	Tube - Oil Fill	1

Ref. No.	Part No.	Description	No. Used
10	81-4180	Hose - Crankcase Breather	1
11	81-4200	Spacer	1
12	81-4220	Stud - Carburetor	2
13	50-7180	Nut	2
*	81-4240	Air Cleaner Assembly (Incl. Ref. #1 & 3)	1
*	12-3369	Air Cleaner Assembly (Incl. Ref. #1-3 & 10)	1

*Not Illustrated

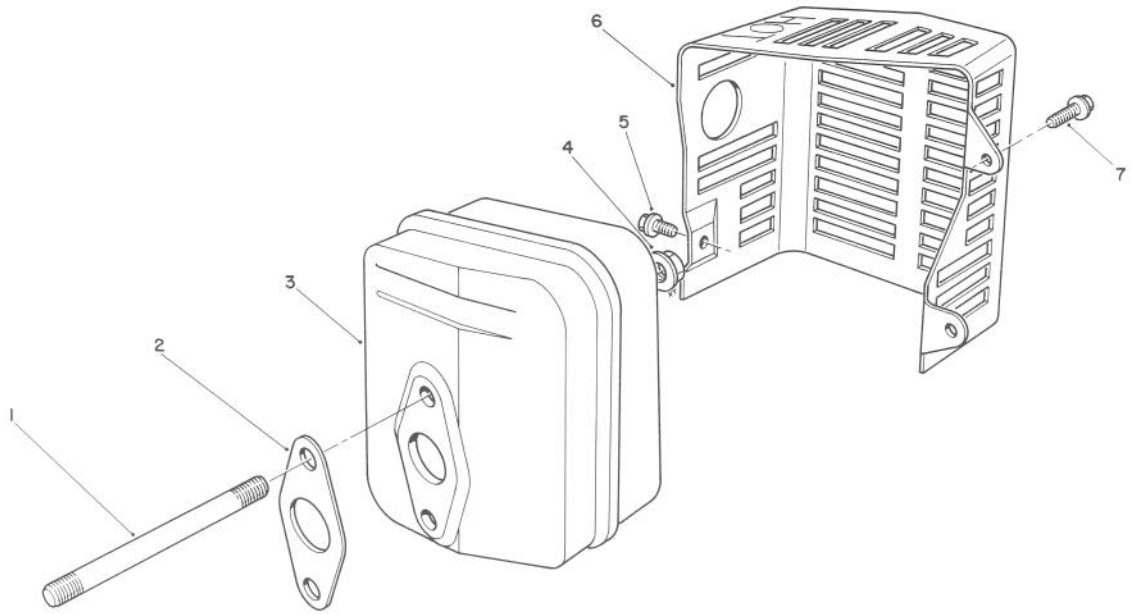

MUFFLER ASSEMBLY (Model No. VMH7)

Ref. No.	Part No.	Description	No. Used
1	81-4380	Stud - Muffler	2
2	81-4390	Gasket - Muffler	1
3	81-4400	Muffler	1
4	50-0530	Nut	2
5	81-4420	Screw	1

Ref. No.	Part No.	Description	No. Used
6	81-4430	Cover - Muffler	1
7	81-1170	Bolt	2
*	56-6730	Spark Arrestor Kit (Incl. Ref. #2) Optional	1

*Not Illustrated

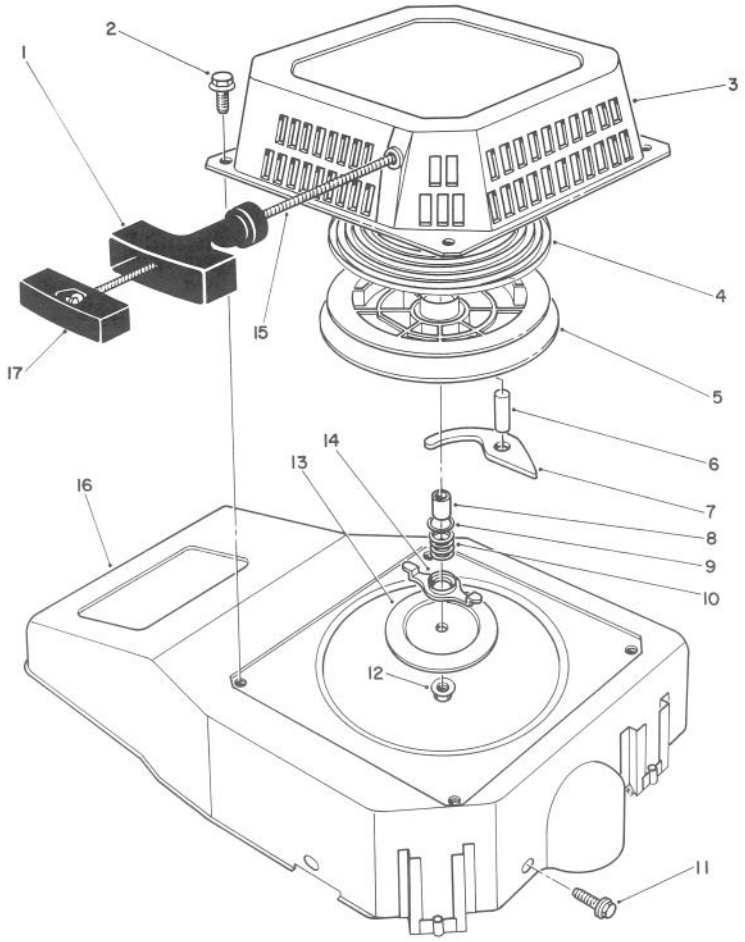

RECOIL ASSEMBLY (Model No. VMH7)

Ref. No.	Part No.	Description	No. Used
1	81-4000	Handle	1
2	81-1280	Bolt	4
3	81-3970	Case - Recoil	1
4	81-4010	Spring - Recoil	1
5	81-4020	Reel - Rope Pulley	1
6	81-4030	Pin	1
7	81-4040	Pawl	1
8	81-4050	Spacer	1
9	81-4060	Washer	1
10	81-4070	Spring - Friction	1
11	81-1170	Bolt	3

Ref. No.	Part No.	Description	No. Used
12	81-4100	Nut - Lock	1
13	81-4090	Plate - Friction	1
14	81-4080	Guide - Pawl	1
15	81-1270	Rope - Recoil	1
16	81-3960	Shroud - Blower	1
17	81-4960	Retainer - Rope	1
*	81-3550	Rope & Handle Assembly (Incl. Ref. #1, 15 & 17)	1
*	81-3270	Recoil Starter Assembly (Incl. Ref. #1, 3-10, 12-15 & 17)	1

*Not Illustrated

MAINTENANCE RECORD

Date	Hours Used	Oil Change	Air Cleaner Service	Lubrication	Sharpen Blade	Winter Storage	Spring Service	Spark Plug Gap