Form No. 3353-608 Rev A

Trench Filler

for Compact Utility Loaders

Model No. 22472—260000001 and Up

Operator's Manual

Contents

	Page
Introduction	2
Safety	2
General Trench Filler Safety	3
Toro Trench Filler Safety	4
Safety Decals	5
Overview	5
Specifications	6
Stability Ratings	6
Operation	6
Using the Trench Filler	6
Tips for Trench Filling	7
Transporting the Trench Filler on a Trailer	7
Maintenance	7
Recommended Maintenance Schedule	7
Adjusting the Skids	8
Greasing the Bearing	8
Storage	8
Troubleshooting	8

Introduction

Read this manual carefully to learn how to operate and maintain your product properly. The information in this manual can help you and others avoid injury and product damage. Although Toro designs and produces safe products, you are responsible for operating the product properly and safely.

You may contact Toro directly at www.Toro.com for product and accessory information, help finding a dealer, or to register your product.

Whenever you need service, genuine Toro parts, or additional information, contact an Authorized Service Dealer or Toro Customer Service and have the model and serial numbers of your product ready. Figure 1 illustrates the location of the model and serial numbers on the product.

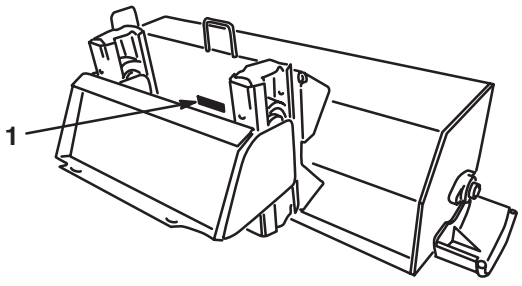

Figure 1

1. Model and serial number plate

Write the product model and serial numbers in the space below:

Model No. _____

Serial No. _____

This manual identifies potential hazards and has special safety messages that help you and others avoid personal injury and even death. ***Danger***, ***Warning***, and ***Caution*** are signal words used to identify the level of hazard. However, regardless of the hazard, be extremely careful.

Danger signals an extreme hazard that **will** cause serious injury or death if you do not follow the recommended precautions.

Warning signals a hazard that **may** cause serious injury or death if you do not follow the recommended precautions.

Caution signals a hazard that may cause minor or moderate injury if you do not follow the recommended precautions.

This manual uses 2 other words to highlight information. **Important** calls attention to special mechanical information and **Note:** emphasizes general information worthy of special attention.

Safety

To ensure maximum safety and best performance, and to gain knowledge of the product, it is essential that you and any other operator of the product read and understand the contents of this manual before the engine is ever started.

⚠ This is the safety alert symbol. It is used to alert you to potential personal injury hazards. Obey all safety messages that follow this symbol to avoid possible injury or death.

Improperly using or maintaining this product could result in injury or death. To reduce this potential, comply with the following safety instructions.

⚠ Warning ⚠

The loader arms may lower when in the raised position after stopping the engine, crushing anyone under them.

Lower the loader arms before stopping the engine.

© 2006 by The Toro Company

8111 Lyndale Avenue South
Bloomington, MN 55420-1196

Contact us at www.Toro.com
All Rights Reserved
Printed in the USA

Warning

If you do not fully seat the quick-attach pins through the attachment mount plate, the attachment could fall off of the traction unit, crushing you or bystanders.

- **Ensure that the quick-attach pins are fully seated in the attachment mount plate.**
- **Ensure that the attachment mount plate is free of any dirt or debris that may hinder the connection of the traction unit to the attachment.**
- **Refer to your traction unit *Operator's Manual* for information on safely connecting an attachment to your traction unit.**

Danger

When the trench filler is in operation, the rollers in the float guide move and can injure hands and feet.

- **Stay behind the handles while operating the trench filler.**
- **Keep face, hands, feet, and any other part of your body or clothing away from moving parts.**

Danger

When the trench filler is in operation, the auger can be rotating and cut off or injure hands and feet.

- **Before adjusting, cleaning, repairing and inspecting the trench filler, *move the auxiliary hydraulics lever to the off position, stop the engine, and wait for all moving parts to stop.* Remove the key.**
- **Stay behind the handles while operating the trench filler.**
- **Keep face, hands, feet, and any other part of your body or clothing away from moving or rotating parts.**

Warning

Hydraulic fluid escaping under pressure can penetrate the skin and cause injury. Fluid injected into the skin must be surgically removed within a few hours by a doctor familiar with this form of injury or gangrene may result.

- **Keep your body and hands away from pin hole leaks or nozzles that eject high pressure hydraulic fluid.**
- **Use cardboard or paper to find hydraulic leaks; never use your hands.**

Caution

Hydraulic couplers, hydraulic lines and valves, and hydraulic fluid may be hot. If you contact hot components, you may be burned.

- **Wear gloves when operating the hydraulic couplers.**
- **Allow the traction unit to cool before touching hydraulic components.**
- **Do not touch hydraulic fluid spills.**

General Trench Filler Safety

The following instructions have been adapted from the ANSI/OPEI and ISO standards.

Preparation

- Never attempt to make any adjustments while the engine is running, except when specifically recommended by Toro.
- The operation of any powered machine can result in foreign objects being thrown into the eyes. Always wear safety glasses or eye shields during operation or while performing an adjustment or repair.

Operation

- Do not put hands or feet near or under rotating parts.
- Exercise extreme caution when operating on or crossing gravel drives, walks, or roads. Stay alert for hidden hazards or traffic. Do not carry passengers.
- After striking a foreign object, stop the engine, cycle the auxiliary hydraulics lever, disconnect the hydraulic lines, thoroughly inspect the trench filler for any damage, and repair the damage before restarting and operating the trench filler.

- If the unit should start to vibrate abnormally, stop the engine and check immediately for the cause. Vibration is generally a warning of trouble.
- Stop the engine whenever you leave the operating position, before unclogging the auger housing, and when making any repairs, adjustments, or inspections.
- When cleaning, repairing, or inspecting, stop the engine, make certain the auger and all moving parts have stopped, cycle the auxiliary hydraulics lever, and disconnect the hydraulic lines.
- Keep children and pets away.
- Do not overload the machine capacity by attempting to backfill at too fast a rate.
- Never operate the machine at high transport speeds on slippery surfaces. Look behind and use care when moving in reverse.
- Never allow anyone in front of the unit.
- Disengage power to the auger when the trench filler is transported or not in use.
- Never operate the trench filler without good visibility or light.

Maintenance and Storage

- Check fasteners at frequent intervals for proper tightness to be sure the equipment is in safe working condition.
- Always refer to the operator's manual for important details if the trench filler is to be stored for an extended period.
- Maintain or replace safety and instruction labels, as necessary.

Toro Trench Filler Safety

The following list contains safety information specific to Toro products or other safety information that you must know that is not included in the ANSI or ISO standards.

- **The rotating auger can cut off or injure fingers or hands.** Stay in the operator's position while operating the trench filler. **Keep your face hands, feet, and any other part of your body or clothing away from moving or rotating parts.**
- Before adjusting, cleaning, repairing, and inspecting the trench filler, **stop the engine, remove the key, and wait for all moving parts to stop**. Also, cycle the auxiliary hydraulics lever and disconnect the hydraulic lines.
- **Before** leaving the operator's position, stop the engine, remove the key, and wait for all moving parts to stop.
- Do not wear loose fitting clothing that could possibly get caught in moving parts.
- If a shield, safely device, or decal is damaged, illegible, or lost, repair or replace it before beginning operation. Also, tighten any loose fasteners.
- Perform only those maintenance instructions described in this manual. Before performing any maintenance, service, or adjustment, stop the engine, remove the key, cycle the auxiliary hydraulics lever, and disconnect the hydraulic lines. If major repairs are ever needed, contact your Authorized Toro Service Dealer.
- To ensure the best performance and safety, purchase only genuine Toro replacement parts and accessories to keep the Toro all Toro. **Do not use "Will Fit" replacement parts and accessories as they could cause a safety hazard.**
- Always transport the trench filler in a lowered position.

Safety Decals



93-7321

1. Cutting/dismembermenthazard of hands and feet, rotating knives—stay away from moving parts.

–



100-4652

1. Crushing hazard of hand—bystanders a safe distance from the machine.
2. Crushing hazard of foot—bystanders a safe distance from the machine.



100-4708

1. Thrown object hazard—Keep bystanders a safe distance from the traction unit.

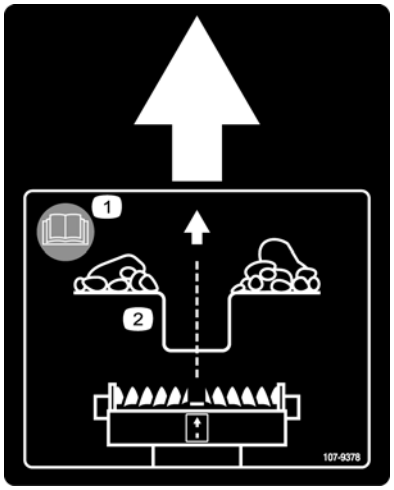

107-9378

1. For more information read the *Operator's Manual.*
2. Keep the center arrow on the trench filler attachment decal centered over the trench when operating.

Overview

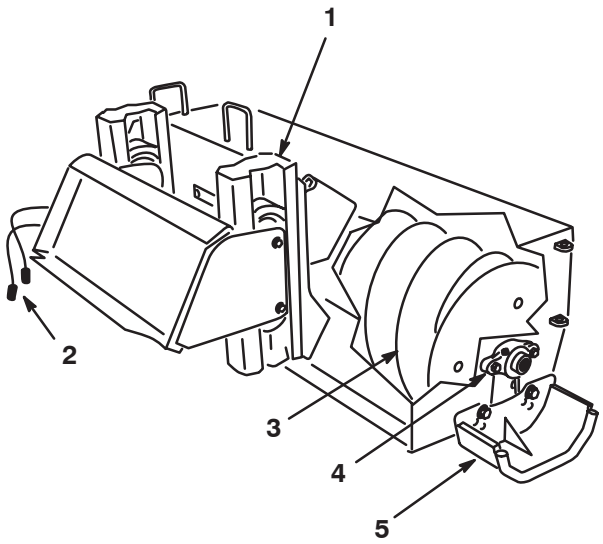

Figure 2

1. Float guide
2. Hydraulic lines
3. Auger
4. Bearing
5. Skid (2)

Specifications

Width	62 inches (157 cm)
Length	31 inches (79 cm)
Height	22 inches (56 cm)
Weight	410 lbs (186 Kg)
Working width	48 inches (122 cm)
Auger diameter	14 inches (35.6 cm)
Auger speed	293 rpm @ 11 gpm (42 Lpm), 90% eff.
Tip speed	215 inches/sec (546 cm/sec)
Float distance	6 inches (15 cm)

Stability Ratings

To determine the degree of slope you can traverse with the trench filler installed on a traction unit, find the stability rating for the hill position you want to travel in the table below, then find the degree of slope for the same rating and hill position in the Stability Data section of the traction unit *Operator's Manual*.

Orientation	Stability Rating
Front Uphill 	C
Rear Uphill 	C
Side Uphill 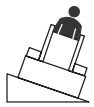	B

Warning

If you exceed the maximum recommended slope, the traction unit could tip, possibly crushing you or bystanders.

Do not drive the traction unit on a slope steeper than the maximum recommended slope.

Operation

Refer to your traction unit *Operator's Manual* for complete instructions on installing attachments onto the traction unit and connecting hydraulic hoses.

Important Always use the traction unit to lift and move the attachment.

Using the Trench Filler

1. Start the engine.
2. Pull the auxiliary hydraulics lever to the reference bar to engage the trench filler.
3. Slowly lower the trench filler to the ground so that the auger is just above the ground.
4. For best results, start with the float rollers centered in the float guide.
5. Ensure that all the trench filler is functioning correctly.
6. Slowly move the traction unit forward to fill the trench.

   Note: If you move too fast, the trench filler will stall. If it stalls, raise it slightly, slowly drive rearward, then resume moving forward.
7. When finished, stop the trench filler by releasing the auxiliary hydraulics lever.

Tips for Trench Filling

- Clean the area of trash, branches, and rocks before trench filling to prevent equipment damage.
- For best trench filling, center the unit over the trench (Fig. 3).

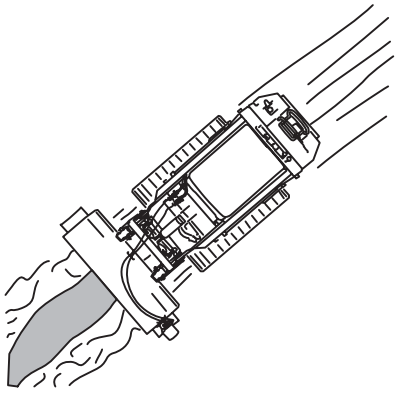

Figure 3

- Always begin trench filling with the slowest ground speed possible. Increase the speed if conditions permit.
- Always use full throttle (maximum engine speed) when trench filling.
- Never transport the trench filler with the loader arms raised.
- When trench filling, the auger should just clear the original ground surface to obtain maximum soil deposit into the trench.
- Periodically check to ensure that the rollers on the trench filler float are operating properly.
- When finished, compact the material over the trench to prepare it for grading.

Transporting the Trench Filler on a Trailer

- Place the trench filler on a trailer or truck capable of carrying it.
- Securely tie the trench filler to the trailer or truck using tie straps appropriate for the weight of the trench filler and for highway use.

Maintenance

Recommended Maintenance Schedule

Maintenance Service Interval	Maintenance Procedure
8 hours	• Check the bolt and nuts securing the auger.
200 hours	• Grease the bearing.
Yearly/Storage	• Skids—adjust as required • Paint any chipped surfaces.

Caution

If you leave the key in the ignition switch, someone could accidently start the engine and seriously injure you or other bystanders.

Remove the key from the ignition and disconnect the wire from the spark plug before you do any maintenance. Set the wire aside so that it does not accidentally contact the spark plug.

Adjusting the Skids

The distance between the auger blade and the ground is controlled by skids on each side of the housing. The height can be adjusted so the auger flighting will not catch on uneven surfaces.

1. Lower the trench filler until it is just above the ground, then stop the engine.
2. Remove the bolts that secure the skids to the housing (Fig. 4).

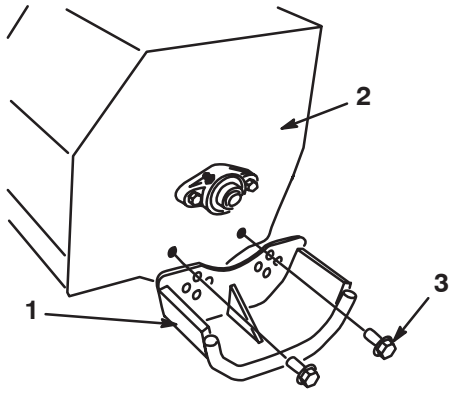

Figure 4

1. Skid
2. Housing
3. Bolts (bolt heads to the outside)

3. Position the skids equally on both sides and secure them with the bolts (Fig. 4).

Greasing the Bearing

Lubricate the bearing with grease every 200 hours (Fig. 5).

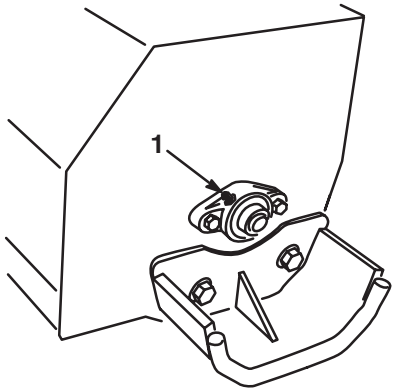

Figure 5

1. Grease fitting

1. Wipe the grease fitting with a clean rag.
2. Install a grease gun onto the fitting and gently apply 2 or 3 pumps of #2 multi-purpose lithium-base grease.

Storage

1. Before long term storage, brush the dirt from the attachment.
2. Check and tighten all bolts, nuts, and screws. Repair or replace any part that is damaged or worn.
3. Ensure that all hydraulic couplers are connected together to prevent contamination of the hydraulic system.
4. Paint all scratched or bare metal surfaces with paint available from an Authorized Service Dealer.
5. Store the trench filler in a clean, dry garage or storage area. Cover the trench filler to protect it and keep it clean.

Troubleshooting

PROBLEM	POSSIBLE CAUSES	CORRECTIVE ACTION
Trench filler does not operate.	1. Hydraulic coupler not completely connected	1. Check and tighten all couplers.
	2. Damaged hydraulic coupler	2. Check couplers and replace any that are damaged.
	3. An obstruction in a hydraulic hose	3. Find and remove the obstruction.
	4. Auxiliary valve on the traction unit is not opening.	4. Repair the valve.