Form Number 3353-626 Rev A

# Power Max 826LE
## Snowthrower

**Model No. 38621 - 260000001 and up.**

# Parts Catalog

**Ordering Replacement Parts**
To order replacement parts, please supply the part number, the quantity, and the description of each part desired.

**Understanding Reference Numbers**
Each Identified part in an illustration has a reference number. The reference number for a part also appears in the parts list, along with other information about the part.

This catalog uses two special reference number formats, one to indicate parts in a service assembly and another to indicate the quantity of a given part in an illustration.

**Service Assembly Reference Numbers**
Parts in service assemblies have reference numbers in the form a:b. The a represents the reference number of the entire service assembly and the b represents a sequential number unique to each part within the service assembly.

For example, a wheel assembly might be identified by reference number 6, the tire by 6:1, the valve by 6:2, and the wheel by 6:3. When you order the assembly identified by reference number 6, you receive all parts identified by reference numbers 6:1, 6:2, and 6:3. However, you may also order any part individually. Reference numbers of this type appear in illustrations and in part lists.

**Reference Numbers Indicating Quantity**
In an illustration, if a reference number indicates more than one part, the reference number has the form nX y. The n represents the quantity of the part, the X is the multiplication symbol, and the y represents the reference number.

For example, in an illustration, the reference number 2X 37 means that two of the parts identified by reference number 37 are indicated.

© The Toro Company - 2005
All Rights Reserved

Register your product at www.Toro.com

# Contents


| Description | Page |
|---|---|
| Auger and Housing Assembly | 3 |
| 26in Auger Gearcase Assembly No. 108-7328 | 4 |
| Chute Assembly | 5 |
| Chain Drive Assembly | 6 |
| Frame Assembly | 7 |
| Control Panel Assembly | 9 |
| Handle and Control Assembly | 10 |
| Lever Chute Control Assembly | 11 |
| Engine Assembly | 12 |
| Carburetor Assembly Tecumseh LH318SA-156564H | 13 |
| Engine Assembly Tecumseh LH318SA-156564H | 14 |
| Engine Assembly (continued) Tecumseh LH318SA-156564H | 16 |
| Electric Starter Assembly Tecumseh LH318SA-156564H | 18 |
| Recoil Starter Assembly Tecumseh LH318SA-156564H | 19 |
| Recoil Starter Assembly (Optional) Tecumseh LH318SA-156564H | 20 |
| Attachments and Accessories List | 21 |


# Part Description Abbreviations

Part descriptions in this catalog may include the following abbreviations.

| | |
|---|---|
| AR | as required |
| ASM | assembly |
| BBC | blade brake clutch |
| CARR | carriage |
| DEG | degrees |
| EXT | external |
| FH | flat head |
| GA | gauge |
| HF | hex flange |
| HH | hex head |
| HHF | hex head flange |
| HHFTF | hex head flange thread forming |
| HJ | hex jam |
| HLH | hex lag head |
| HOC | height-of-cut |
| HSBH | hex socket button head |
| HSFH | hex socket flat head |
| HSH | hex socket head |
| HWH | hex washer head |
| HWHTF | hex washer head thread forming |
| HYD | hydraulic |
| INC | incorporated |
| LH | left hand |
| NI | nylon insert |
| NPTF | national pipe thread fine |
| PFH | phillips flat head |
| PPH | phillips pan head |
| PPHTF | phillips pan head thread forming |
| PRH | phillips round head |
| PTH | phillips truss head |
| PTO | power-take-off |
| RH | right hand |
| ROPS | roll-over-protection-system |
| SFH | slotted fillister head |
| SHH | slotted hex head |
| SHWH | slotted hex washer head |
| SPH | slotted pan head |
| SQH | square head |
| SRH | slotted round head |
| STD | standard |
| TAP | self tapping |
| TTH | torx truss head |

# Footnotes

❶ Not illustrated

❷ Not serviced separately

❸ Obtain from your local Tecumseh dealer

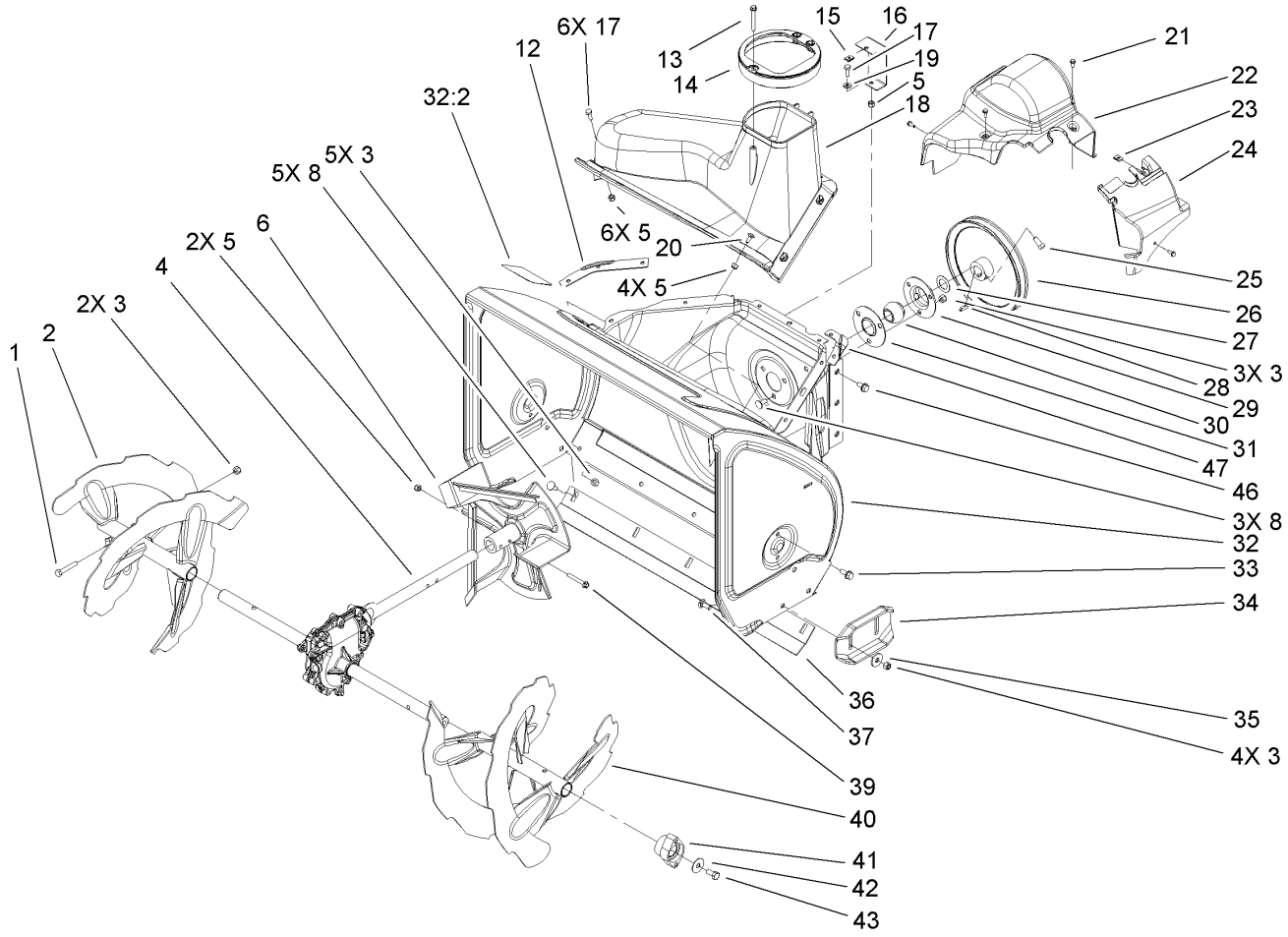


# Auger and Housing Assembly

| Ref | Part No. | Qty. | Description |
|---|---|---|---|
| 1 | 322-21 | 2 | Screw-HH |
| 2 | 106-7289-03 | 1 | RH Auger ASM |
| 3 | 3296-29 | 14 | Nut-Lock, NI |
| 4 | 108-7328 | 1 | 26 Inch Auger Gearcase ASM |
| 5 | 3296-42 | 13 | Nut-Lock, NI |
| 6 | 106-4576-03 | 1 | Impeller ASM |
| 8 | 3230-23 | 8 | Screw-CARR |
| 12 | 107-1017-03 | 1 | Seal-Flange, Cover |
| 13 | 107-3003 | 1 | Screw-Plastite |
| 14 | 107-3006 | 1 | Guide-Chute |
| 15 | 107-1013 | 1 | Nut-Speed, U-Type |
| 16 | 107-1014-03 | 1 | Bracket-Cover, Clip Nut |
| 17 | 321-4 | 7 | Screw-HH |
| 18 | 108-0017 | 1 | Cover |
| 19 | 3256-22 | 1 | Washer-Flat |
| 20 | 3229-1 | 4 | Screw-CARR |
| 21 | 32144-112 | 4 | Screw-HWH |
| 22 | 107-1001 | 1 | Cover-Belt |
| 23 | 701493 | 1 | Nut-Speed |
| 24 | 107-1016 | 1 | Cover-Extension, Belt |
| 25 | 3242-4 | 2 | Screw-Set, SQH |
| 26 | 62-1300 | 1 | Pulley-Impeller |
| 27 | 252-80 | 1 | Washer-Thrust |
| 28 | 3257-23 | 1 | Key-Woodruff |

| Ref | Part No. | Qty. | Description |
|---|---|---|---|
| 29 | 26-6110 | 1 | Flange-Cup, Bearing |
| 30 | 63-3450 | 1 | Bearing-Ball |
| 31 | 26-6120 | 1 | Flange-Cup, Bearing |
| 32 | 107-3822 | 1 | 26In Auger Housing ASM |
| 32:2 | 107-3040 | 1 | Decal-Danger, Auger |
| 33 | 32144-70 | 4 | Screw-HH |
| 34 | 106-4588-01 | 2 | Skid |
| 35 | 52-2861 | 4 | Washer |
| 36 | 105-9976-01 | 1 | Scraper-Fixed |
| 37 | 3230-16 | 4 | Screw-CARR |
| 39 | 321-44 | 2 | Screw-HHF |
| 40 | 106-7299-03 | 1 | LH Auger ASM |
| 41 | 106-4570 | 2 | Auger-Bearing |
| 42 | 3-0750 | 2 | Washer |
| 43 | 323-4 | 2 | Screw-HH |
| 46 | 32144-14 | 6 | Screw-HWH |
| 47 | 108-0039-03 | 1 | Seal |

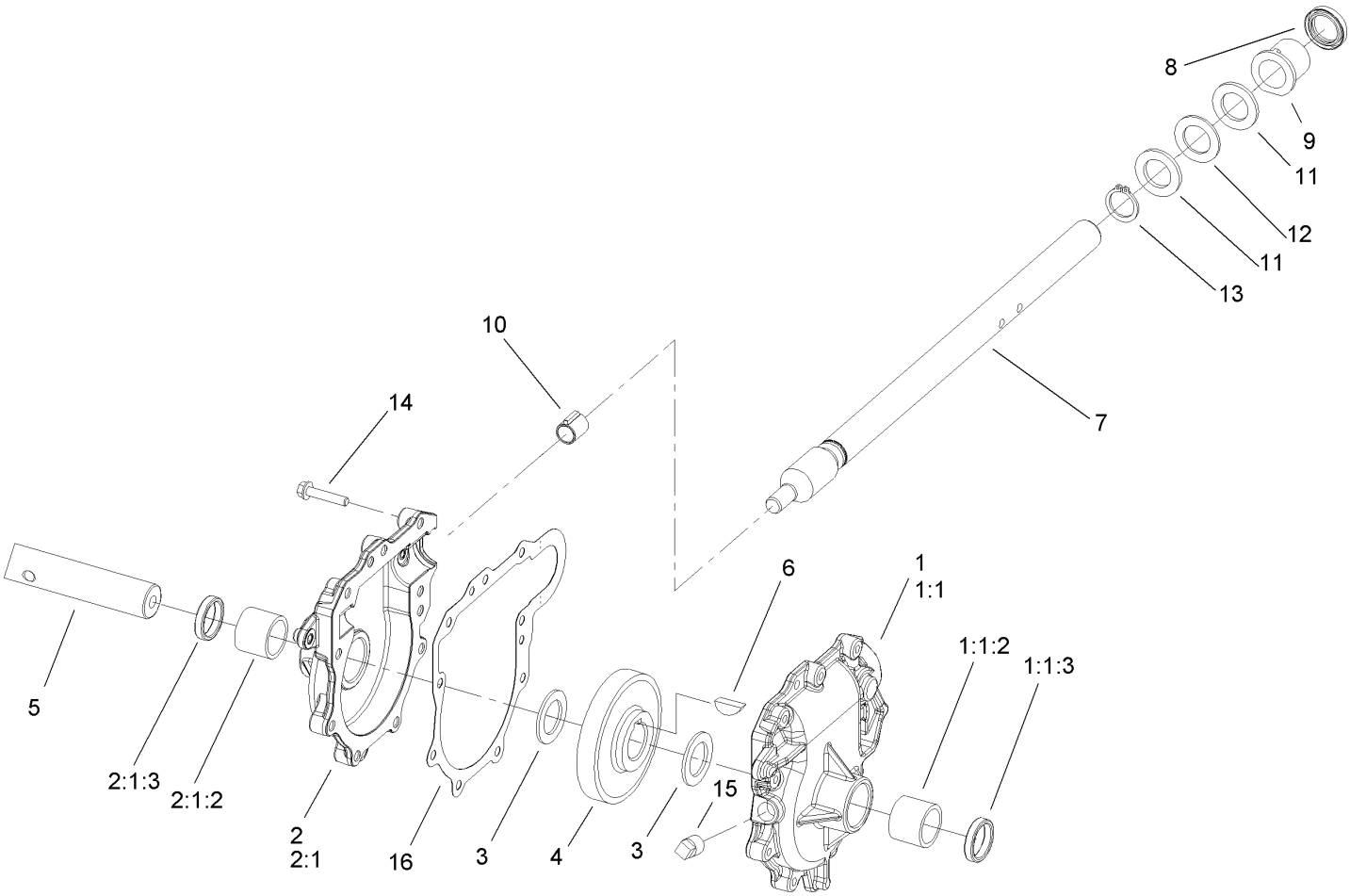


# 26in Auger Gearcase Assembly No. 108-7328

| Ref | Part No. | Qty. | Description |
|---|---|---|---|
| 1 | 108-7325 | 1 | LH Auger Gearcase ASM |
| ❷1:1 | | 1 | Gearcase-Auger, LH |
| 1:1:2 | 256-237 | 1 | Bushing |
| 1:1:3 | 7-0045 | 1 | Seal-Oil |
| 2 | 108-7327 | 1 | RH Auger Gearcase ASM |
| ❷2:1 | | 1 | Gearcase-Auger, RH |
| 2:1:2 | 256-237 | 1 | Bushing |
| 2:1:3 | 7-0045 | 1 | Seal-Oil |
| 3 | 252-71 | 2 | Washer-Thrust |
| 4 | 62-0120 | 1 | Gear-Helical |
| 5 | 106-4579 | 1 | Shaft-Auger |
| 6 | 3257-10 | 1 | Key-Woodruff |
| 7 | 66-7811 | 1 | Shaft-Impeller |
| 8 | 253-149 | 1 | Seal-Oil |
| 9 | 37-6560 | 1 | Bushing-Input |
| 10 | 62-1150 | 1 | Bushing-Worm |
| 11 | 252-78 | 2 | Bearing-Thrust |
| 12 | 252-76 | 1 | Bearing-Thrust |
| 13 | 32151-33 | 1 | Ring-Retaining, EXT |
| 14 | 108-4862 | 9 | Screw-HWHTF |
| 15 | 281-1 | 1 | Plug-Pipe, SQH |
| 16 | 108-7330 | 1 | Gasket-Gearcase, Auger |

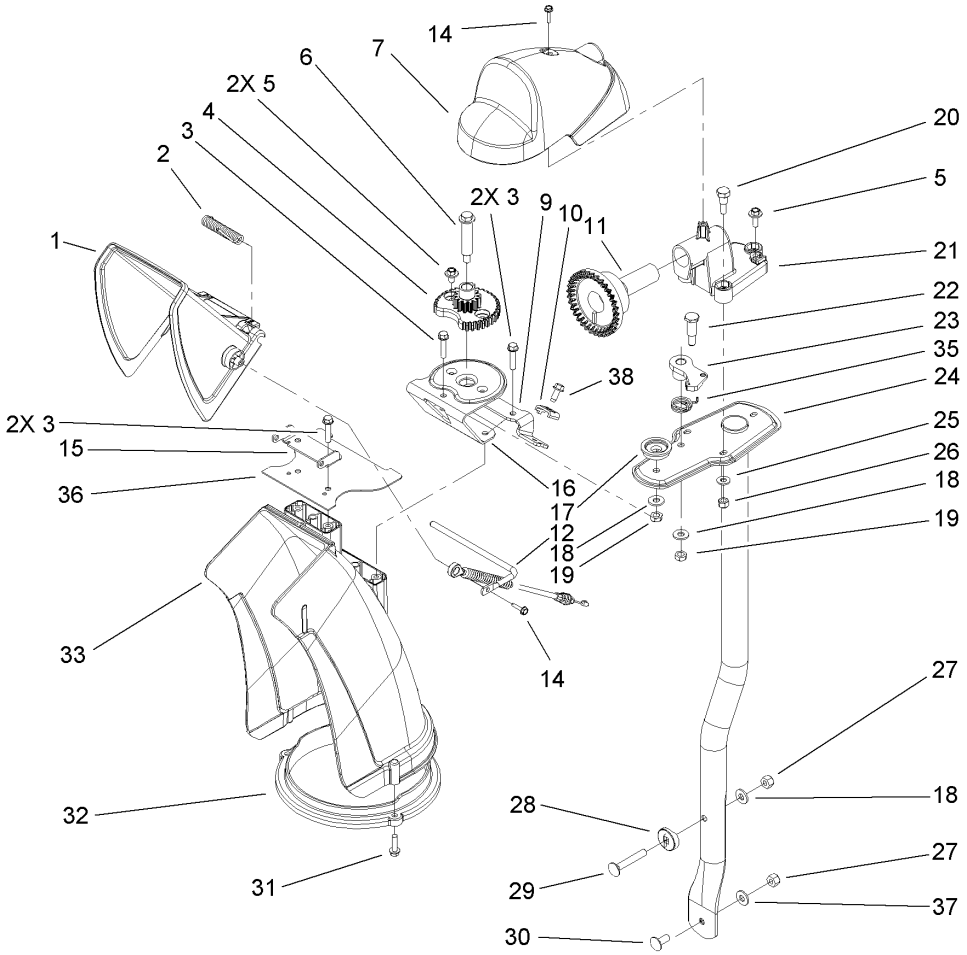


# Chute Assembly

| Ref | Part No. | Qty. | Description |
|---|---|---|---|
| 1 | 106-7309 | 1 | Deflector-Chute |
| 2 | 106-4594 | 1 | Spring-Torsion |
| 3 | 46-8092 | 5 | Screw-Plastite |
| 4 | 106-4472 | 1 | Gear-Chute |
| 5 | 46-6810 | 3 | Screw And Washer ASM |
| 6 | 100-9880 | 1 | Bolt-Shoulder |
| 7 | 106-4585 | 1 | Cover-Gear, Chute |
| 9 | 106-7296 | 1 | Bracket-Cable, Clamp |
| 10 | 106-7297 | 1 | Clamp-Cable |
| 11 | 106-4471 | 1 | Gear-Face |
| 12 | 107-1021 | 1 | Rod-Deflector |
| 14 | 98-1375 | 2 | Screw-HWH |
| 15 | 106-7266 | 1 | Bracket-Deflector |
| 16 | 106-4582-03 | 1 | Bracket-Support, Chute |
| 17 | 106-4422 | 1 | Spacer-Chute |
| 18 | 3256-2 | 3 | Washer-Flat |
| 19 | 3296-47 | 2 | Nut-Lock, NI |
| 20 | 106-7276 | 3 | Screw-Shoulder |
| 21 | 106-7257 | 1 | Mount-Gear, Face |
| 22 | 63-2650 | 1 | Screw-Shoulder |
| 23 | 106-4476 | 1 | Latch-Chute |
| 24 | 106-7253-03 | 1 | Tube-Support |
| 25 | 3256-22 | 3 | Washer-Flat |
| 26 | 3296-42 | 3 | Nut-Lock, NI |

| Ref | Part No. | Qty. | Description |
|---|---|---|---|
| 27 | 3296-29 | 2 | Nut-Lock, NI |
| 28 | 106-7260 | 1 | Washer-Curved |
| 29 | 3230-5 | 1 | Screw-CARR |
| 30 | 3230-23 | 1 | Screw-CARR |
| 31 | 46-8091 | 3 | Screw-HWH |
| 32 | 105-9991 | 1 | Ring-Chute |
| 33 | 106-4440 | 1 | Chute-Discharge |
| 35 | 108-7315 | 1 | Spring-Torsion |
| 36 | 108-5052 | 1 | Seal-Chute |
| 37 | 3290-456 | 1 | Washer-Belleville |
| 38 | 32144-10 | 1 | Screw-HWH |

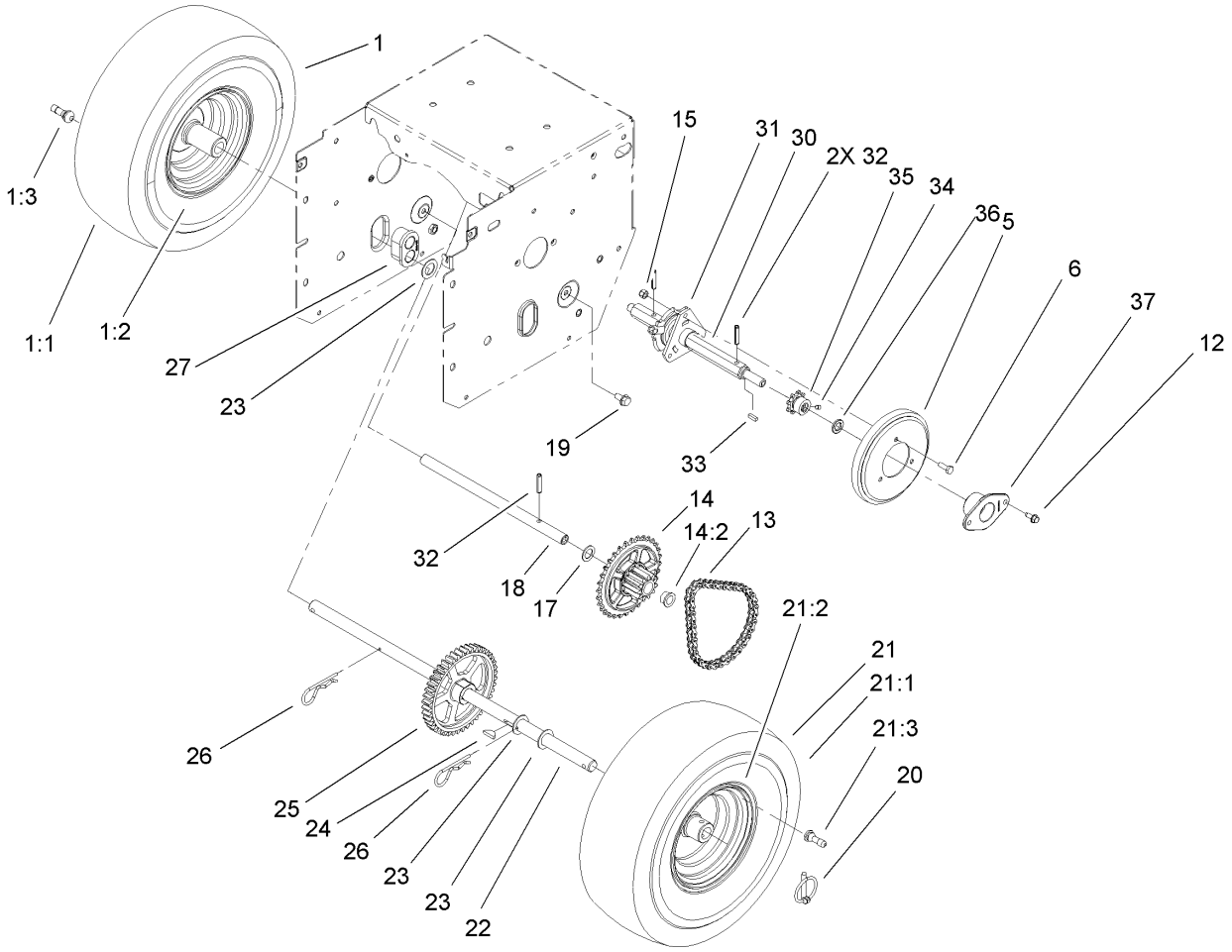


# Chain Drive Assembly

| Ref | Part No. | Qty. | Description |
|---|---|---|---|
| ❷1 | | 1 | RH Wheel And Tire ASM |
| 1:1 | 107-3042 | 1 | Tire |
| 1:2 | 107-3043 | 1 | Rim-Tire |
| 1:3 | 232-27 | 1 | Stem-Valve |
| 5 | 106-4480 | 1 | Wheel-Friction |
| 6 | 321-4 | 3 | Screw-HH |
| 12 | 32144-10 | 4 | Screw-HWH |
| 13 | 108-0016 | 1 | Chain-Roller |
| 13 | 2710-6 | 1 | Link-Connecting |
| 14 | 108-0013 | 1 | Sprocket ASM |
| 14:2 | 108-2974 | 2 | Bushing-Flange |
| 15 | 3296-42 | 3 | Nut-Lock, NI |
| 17 | 107-3041 | 1 | Washer-Flat |
| 18 | 106-4592 | 1 | Shaft-Intermediate |
| 19 | 32144-14 | 2 | Screw-HWH |
| 20 | 107-3039 | 2 | Klik Pin ASM |
| ❷21 | | 1 | LH Wheel And Tire ASM |
| 21:1 | 107-3042 | 1 | Tire |
| 21:2 | 107-3043 | 1 | Rim-Tire |
| 21:3 | 232-27 | 1 | Stem-Valve |
| 22 | 106-4449 | 1 | Shaft-Axle |
| 23 | 3-8664 | 3 | Washer-Thrust |
| 24 | 3257-7 | 1 | Key-Woodruff |
| 25 | 106-4572 | 1 | Gear-Axle, 44 Tooth |

| Ref | Part No. | Qty. | Description |
|---|---|---|---|
| 26 | 3290-343 | 2 | Pin-Hair |
| 27 | 106-4558 | 2 | Bearing-Axle |
| 30 | 108-5054 | 1 | Shaft-Hex |
| 31 | 106-4434 | 1 | Trunion-Hex |
| 32 | 32121-9 | 3 | Pin-Roll, Slotted |
| 33 | 94-8850 | 1 | Key-Square |
| 34 | 3245-32 | 2 | Screw-HSH |
| 35 | 106-7317 | 1 | Sprocket-8 Tooth |
| 36 | 108-5059 | 1 | Spacer-Bushing |
| 37 | 108-7319 | 2 | Retainer-Bearing |

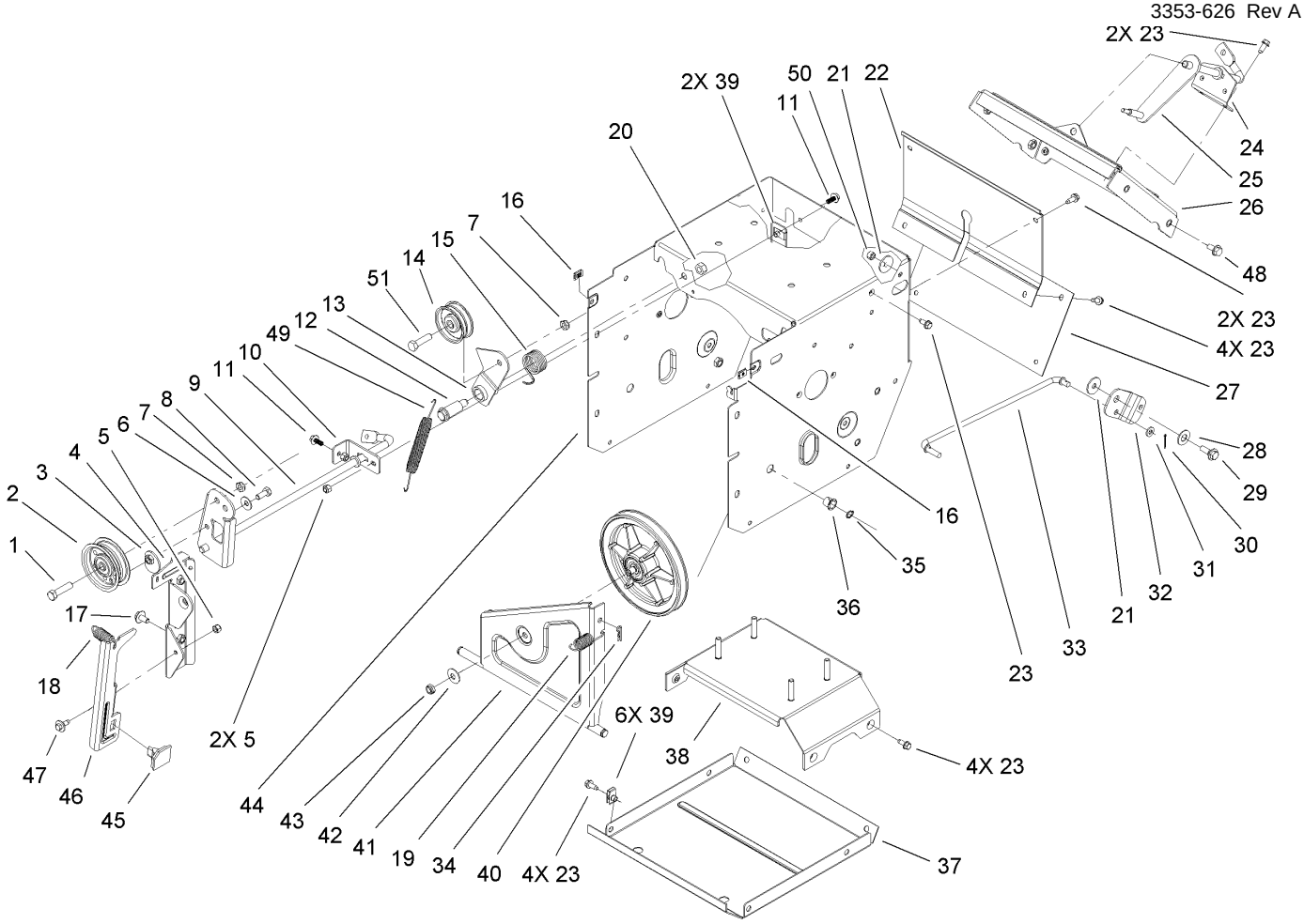


# Frame Assembly

| Ref | Part No. | Qty. | Description |
|---|---|---|---|
| 1 | 323-8 | 1 | Screw-HH |
| 2 | 92-7104 | 1 | Pulley-Idler |
| 3 | 107-1047 | 1 | Nut |
| 4 | 107-1039 | 1 | Bracket-Idler, Impeller |
| 5 | 3296-42 | 3 | Nut-Lock, NI |
| 6 | 3290-456 | 1 | Washer-Belleville |
| 7 | 3296-59 | 2 | Nut-Lock, NI |
| 8 | 322-3 | 1 | Screw-HH |
| 9 | 107-3838-03 | 1 | Impeller Clutch ASM |
| 10 | 106-7341 | 1 | Bracket-Rear, Clutch |
| 11 | 99-6810 | 2 | Screw-HH |
| 12 | 108-5056 | 1 | Bolt-Shoulder |
| 13 | 108-5058 | 1 | Arm-Idler, Traction |
| 14 | 3-4244 | 1 | Pulley-Idler |
| 15 | 108-7332 | 1 | Spring-Torsion |
| 16 | 107-1013 | 2 | Nut-Speed, U-Type |
| 17 | 3234-7 | 2 | Screw-HHF |
| 18 | 107-1045 | 1 | Spring-Extension |
| 19 | 107-1003 | 1 | Spring-Extension |
| 20 | 3296-76 | 1 | Nut-Lock, NI |
| 21 | 5-4460 | 2 | Washer-Pivot |
| 22 | 106-4556-01 | 1 | Cover-Upper |
| 23 | 32144-10 | 17 | Screw-HWH |
| 24 | 108-0036 | 1 | Bracket-Rod, Shift |

| Ref | Part No. | Qty. | Description |
|---|---|---|---|
| 25 | 106-7268 | 1 | Lever-Control, Traction |
| 26 | 108-0026-01 | 1 | Shift Plate ASM |
| 27 | 106-7345-01 | 1 | Cover-Lower |
| 28 | 25-5640 | 1 | Washer |
| 29 | 27-0410 | 1 | Screw-Shoulder |
| 30 | 3272-4 | 1 | Pin-Cotter |
| 31 | 3256-23 | 1 | Washer-Flat |
| 32 | 107-1011 | 1 | Bellcrank-Drive |
| 33 | 106-4467 | 1 | Link-Control, Speed |
| 34 | 3290-307 | 1 | Pin-Hair |
| 35 | 32151-61 | 2 | Ring-Retaining |
| 36 | 256-257 | 2 | Bushing-Nyliner |
| 37 | 106-7330-01 | 1 | Pan-Bottom |
| 38 | 106-7315 | 1 | Brace Frame ASM |
| 39 | 107069 | 8 | Clip |
| 40 | 108-0031 | 1 | Traction Pulley ASM |
| 41 | 108-7307 | 1 | Friction Wheel Bracket ASM |
| 42 | 3290-340 | 1 | Washer-Belleville |
| 43 | 3296-5 | 1 | Nut-Lock |
| 44 | 108-0019-01 | 1 | Traction Frame ASM |
| 45 | 66-8060 | 1 | Pad-Brake |
| 46 | 107-1000 | 1 | Arm-Brake |
| 47 | 92-9698 | 1 | Screw-Shoulder |
| 48 | 32144-14 | 4 | Screw-HWH |

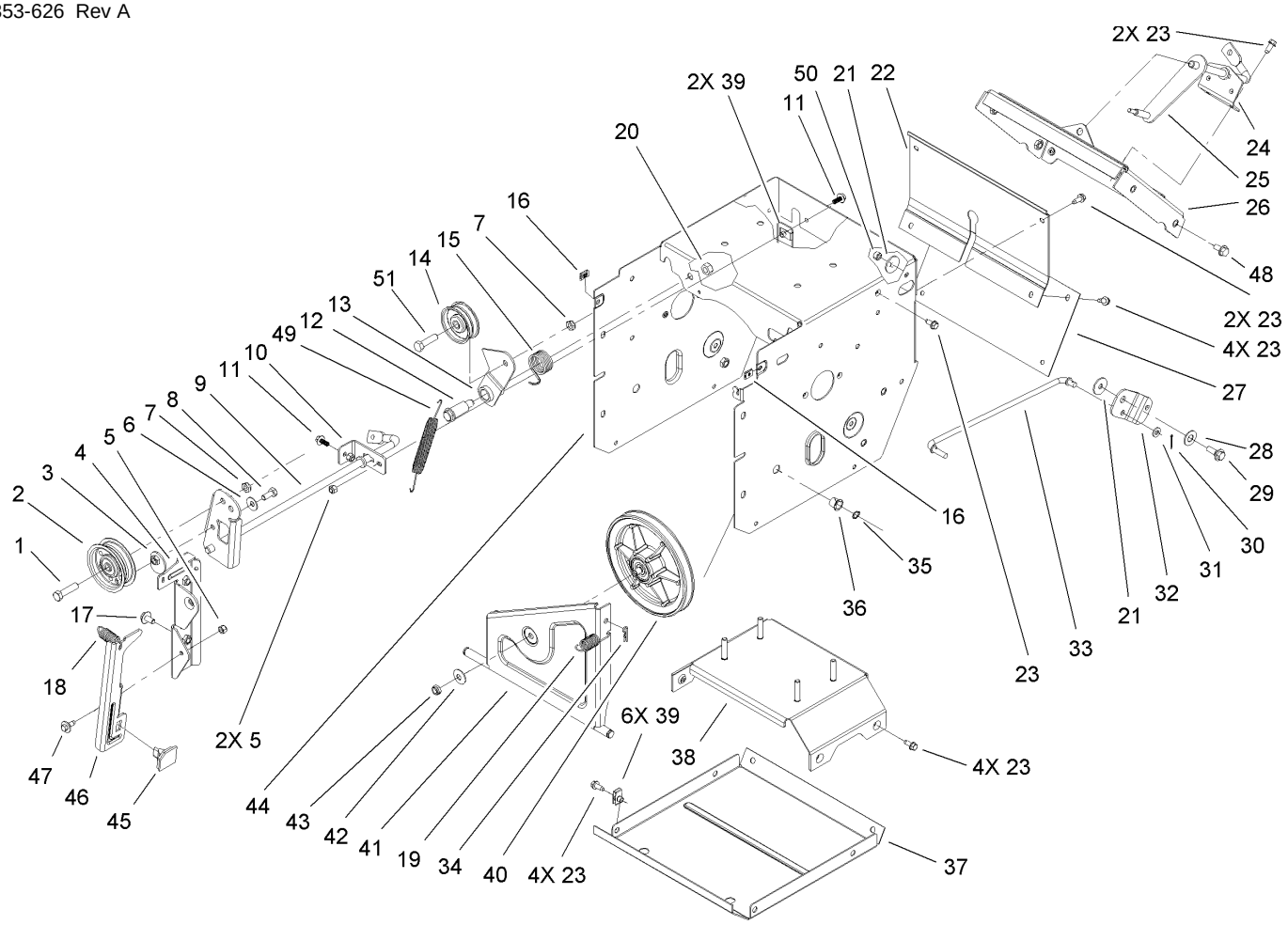


# Frame Assembly (continued)

| Ref | Part No. | Qty. | Description |
|---|---|---|---|
| 49 | 108-2976 | 1 | Spring-Extension |
| 50 | 3296-29 | 1 | Nut-Lock, NI |
| 51 | 323-29 | 1 | Screw-HH |

| | | | |
|---|---|---|---|

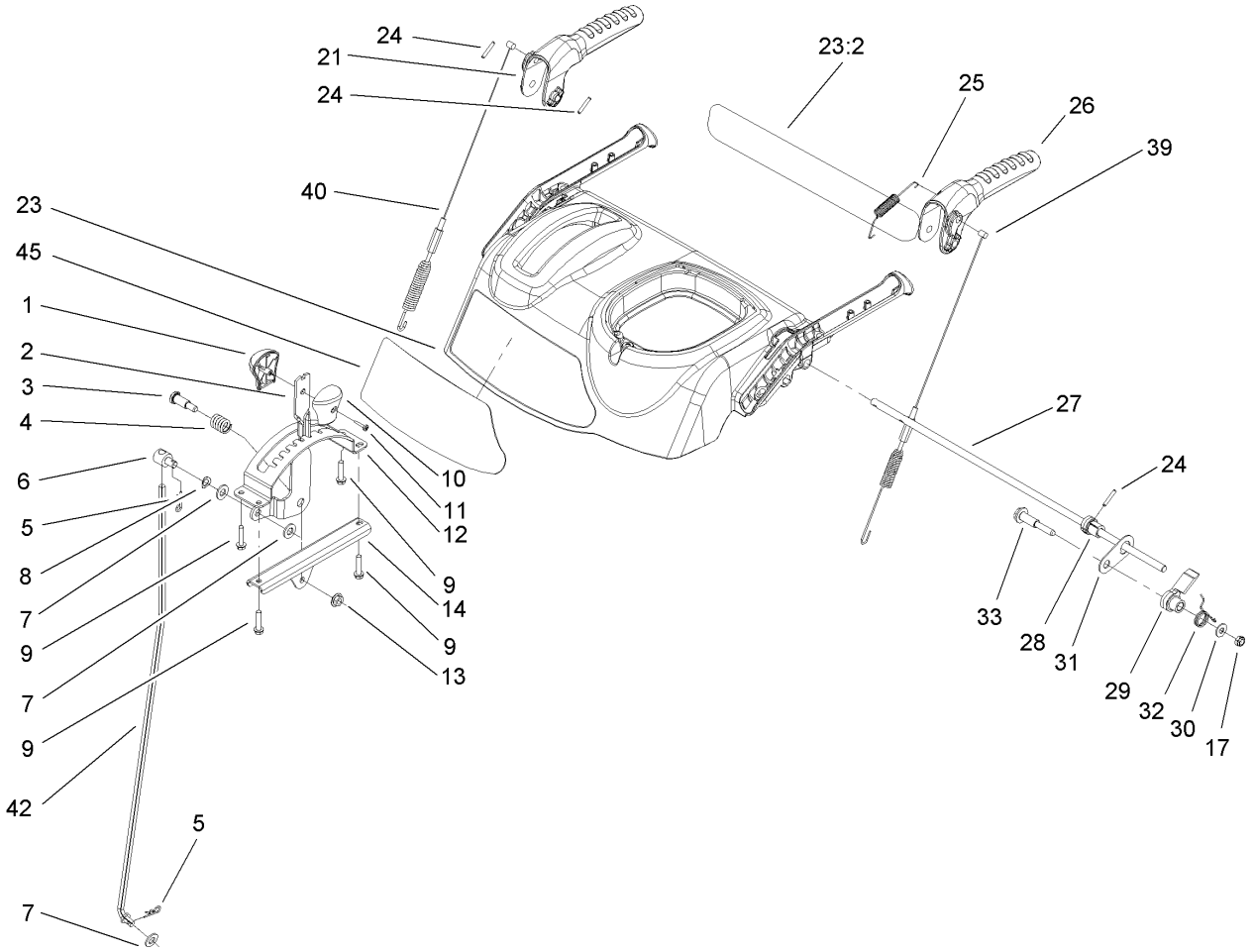


# Control Panel Assembly

| Ref | Part No. | Qty. | Description |
|---|---|---|---|
| 1 | 106-4423 | 1 | Knob-Shift, RH |
| 2 | 106-7278-03 | 1 | Selector-Speed |
| 3 | 63-2650 | 1 | Screw-Shoulder |
| 4 | 108-7313 | 1 | Spring-Compression |
| 5 | 3290-307 | 2 | Pin-Hair |
| 6 | 101161 | 1 | Trunnion |
| 7 | 3256-24 | 3 | Washer-Flat |
| 8 | 612586 | 1 | Washer-Spring |
| 9 | 46-8092 | 4 | Screw-Plastite |
| 10 | 105-9999 | 1 | Knob-Shift, LH |
| 11 | 94-4496 | 1 | Screw-PPH |
| 12 | 106-7277-03 | 1 | Guide-Selector, Speed |
| 13 | 32128-13 | 1 | Nut-HF |
| 14 | 106-7279-03 | 1 | Mount-Selector, Speed |
| 17 | 3296-72 | 1 | Nut-Lock, NI |
| 21 | 106-4413 | 1 | Lever-Auger |
| 23 | 107-3826 | 1 | Control Panel ASM |
| 23:2 | 106-4523 | 1 | Decal-Panel, Back Control |
| 24 | 32121-125 | 3 | Pin-Spring |
| 25 | 107-3001 | 1 | Spring-Tension |
| 26 | 106-4410 | 1 | Lever-Traction |
| 27 | 105-9996 | 1 | Rod-Lockout |
| 28 | 107-1043 | 1 | Cam-Lockout |
| 29 | 108-0023 | 1 | Latch-Lockout |

| Ref | Part No. | Qty. | Description |
|---|---|---|---|
| 30 | 98-3499 | 1 | Washer-Flat |
| 31 | 107-3000 | 1 | Link-Lockout |
| 32 | 108-0024 | 1 | Spring-Torsion |
| 33 | 106-4412 | 1 | Screw-Shoulder |
| 39 | 106-4563 | 1 | Cable-Traction |
| 40 | 106-4599 | 1 | Cable-Auger |
| 42 | 107-1005 | 1 | Rod-Shift |
| 45 | 106-4518 | 1 | Decal |

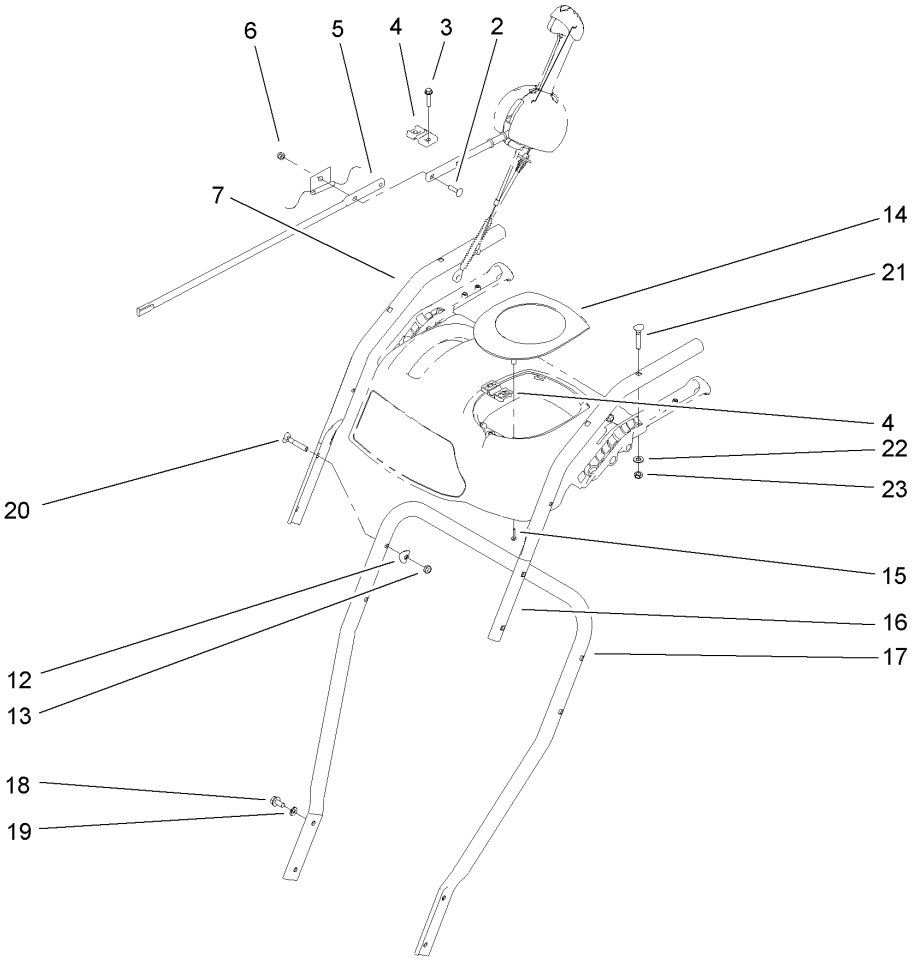


# Handle and Control Assembly

| Ref | Part No. | Qty. | Description |
|---|---|---|---|
| 2 | 3229-30 | 2 | Screw-CARR |
| 3 | 46-8092 | 2 | Screw-Plastite |
| 4 | 105-9987 | 2 | Support-Rod |
| 5 | 106-7283 | 1 | Rod-Chute, Front |
| 6 | 3296-73 | 2 | Nut-Lock, NI |
| 7 | 108-0038-03 | 1 | Handle-Upper, RH |
| 12 | 107-3844 | 4 | Washer |
| 13 | 3296-72 | 4 | Nut-Lock, NI |
| 14 | 106-4586 | 1 | Cover-Panel, Control |
| 15 | 94-4496 | 2 | Screw-PPH |
| 16 | 108-0037-03 | 1 | Handle-Upper, LH |
| 17 | 105-9981-03 | 1 | Handle-Lower |
| 18 | 32144-14 | 4 | Screw-HWH |
| 19 | 3290-475 | 4 | Washer-Belleville |
| 20 | 92-2260 | 4 | Screw-Handle |
| 21 | 107-3018 | 4 | Screw-Handle |
| 22 | 3256-70 | 4 | Washer-Flat |
| 23 | 3296-72 | 4 | Nut-Lock, NI |

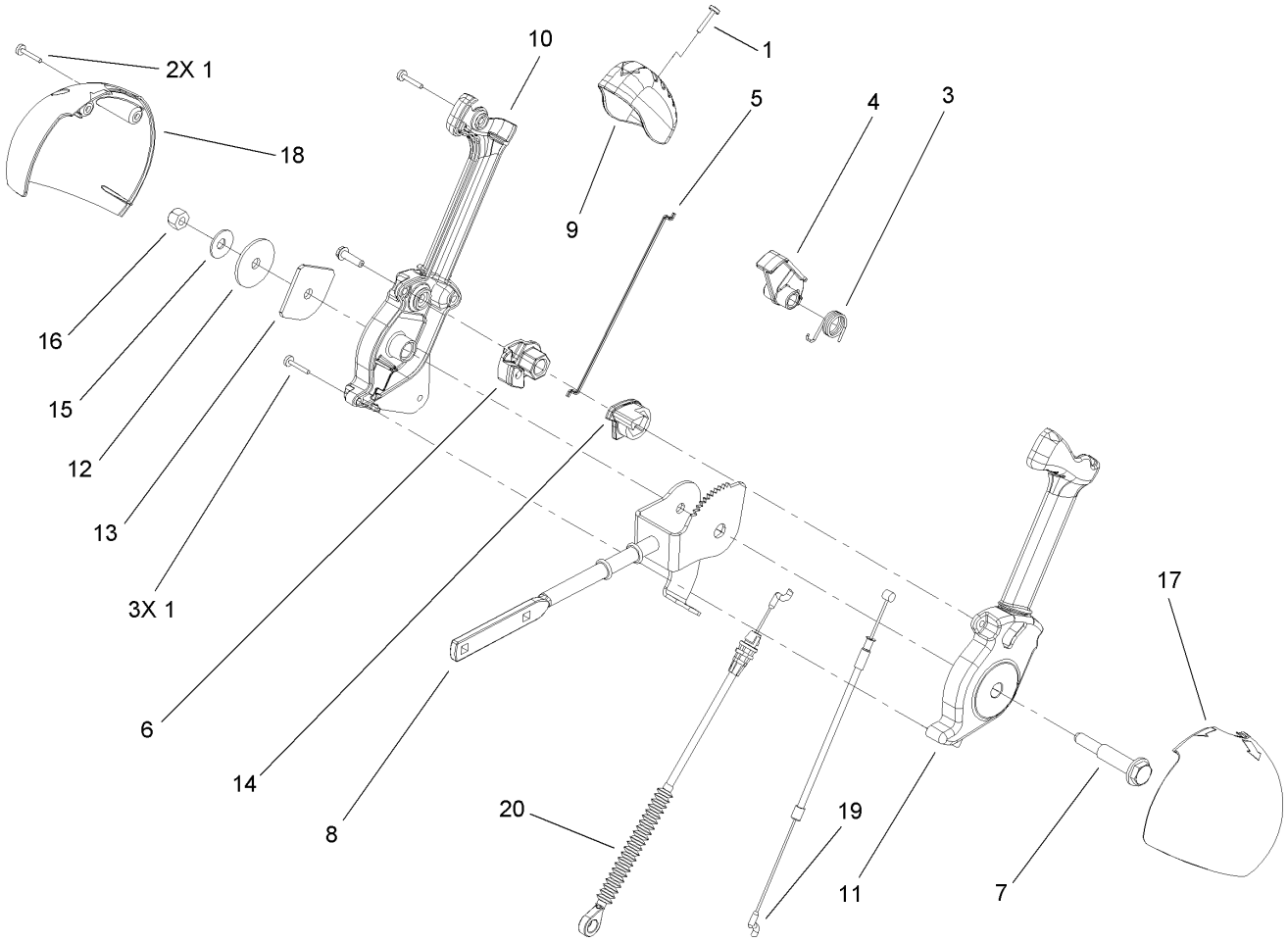


# Lever Chute Control Assembly

| Ref | Part No. | Qty. | Description |
|---|---|---|---|
| 1 | 94-4496 | 6 | Screw-PPH |
| 3 | 105-9982 | 1 | Spring-Torsion |
| 4 | 105-9984 | 1 | Trigger-Latch |
| 5 | 105-9985 | 1 | Link-Latch |
| 6 | 105-9988 | 1 | Lever-Cable, Deflector |
| 7 | 105-9995 | 1 | Screw-Shoulder |
| 8 | 106-4479 | 1 | Rod-Control, Chute |
| 9 | 106-7280 | 1 | Cap-Lever |
| 10 | 106-7281 | 1 | Lever-Chute Control, RH |
| 11 | 106-7282 | 1 | Lever-Chute Control, LH |
| 12 | 107-3002 | 1 | Washer-Nylon |
| 13 | 106-7295 | 1 | Plate-Friction |
| 14 | 106-7310 | 1 | Pawl-Latch |
| 15 | 3290-456 | 1 | Washer-Belleville |
| 16 | 3296-29 | 1 | Nut-Lock, NI |
| 17 | 105-9986 | 1 | Cover-Chute Lever, LH |
| 18 | 106-7292 | 1 | Cover-Chute Lever, RH |
| 19 | 105-9989 | 1 | Cable-Chute Release |
| 20 | 105-9990 | 1 | Cable-Control, Deflector |

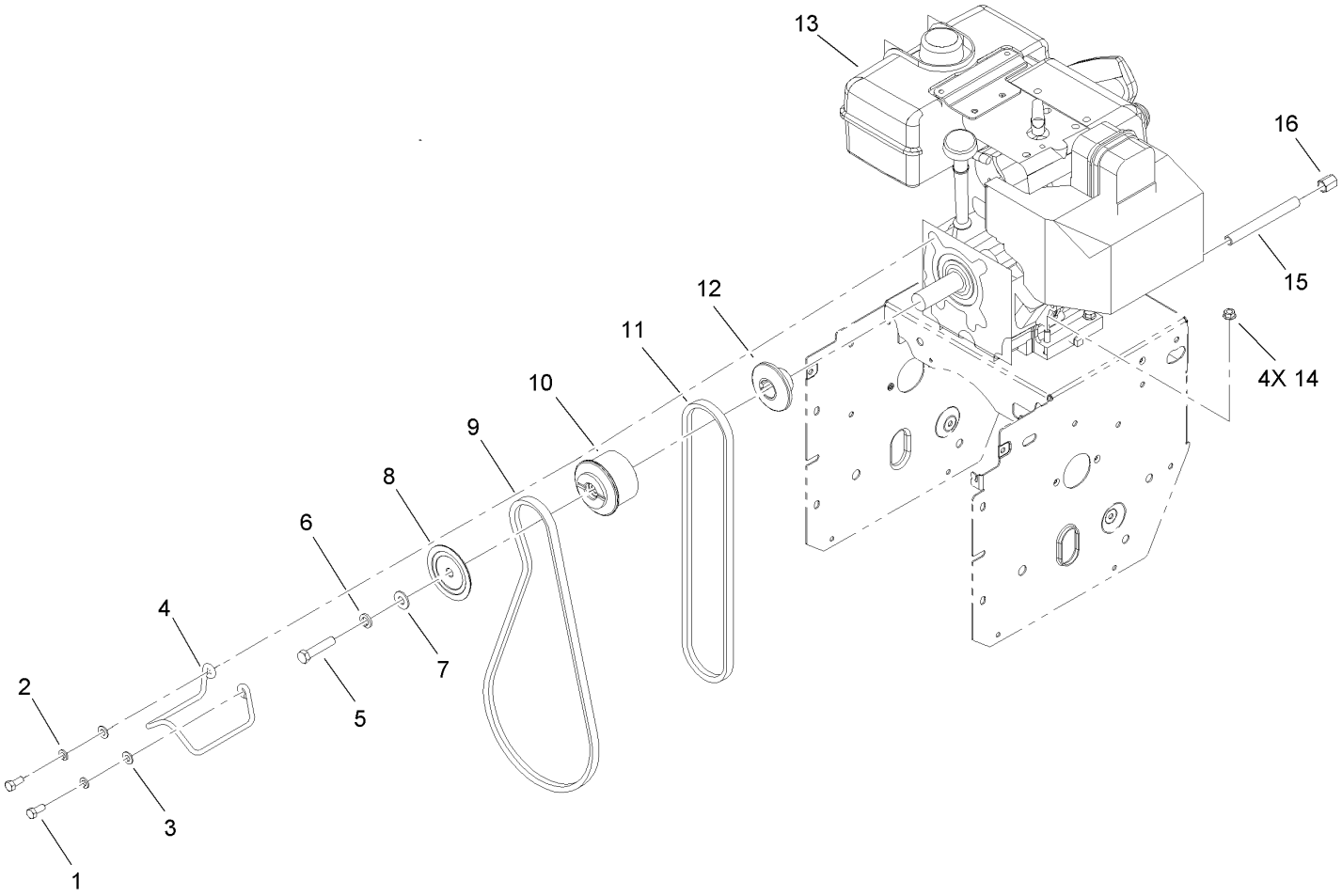


# Engine Assembly

| Ref | Part No. | Qty. | Description |
|---|---|---|---|
| 1 | 3210-3 | 2 | Screw-HH |
| 2 | 3253-4 | 2 | Washer-Lock |
| 3 | 3256-23 | 2 | Washer-Flat |
| 4 | 107-3835 | 1 | Guide-Belt |
| 5 | 3212-8 | 1 | Screw-HH |
| 6 | 3253-6 | 1 | Washer-Lock |
| 7 | 3256-4 | 1 | Washer-Flat |
| 8 | 62-0940 | 1 | Sheave-Half, Impeller |
| 9 | 106-4498 | 1 | Belt-V |
| 10 | 106-7333 | 1 | Pulley-Engine, Center |
| 11 | 94-8812 | 1 | V Belt-Traction |
| 12 | 106-7334 | 1 | Sheave-Half, Traction |
| ❷❸13 | | 1 | Engine-Tecumseh, LH318Sa-156564H |
| 14 | 32128-20 | 4 | Nut-HF |
| 15 | 289-34 | 1 | Nipple-Pipe |
| 16 | 288-2 | 1 | Cap-Pipe |

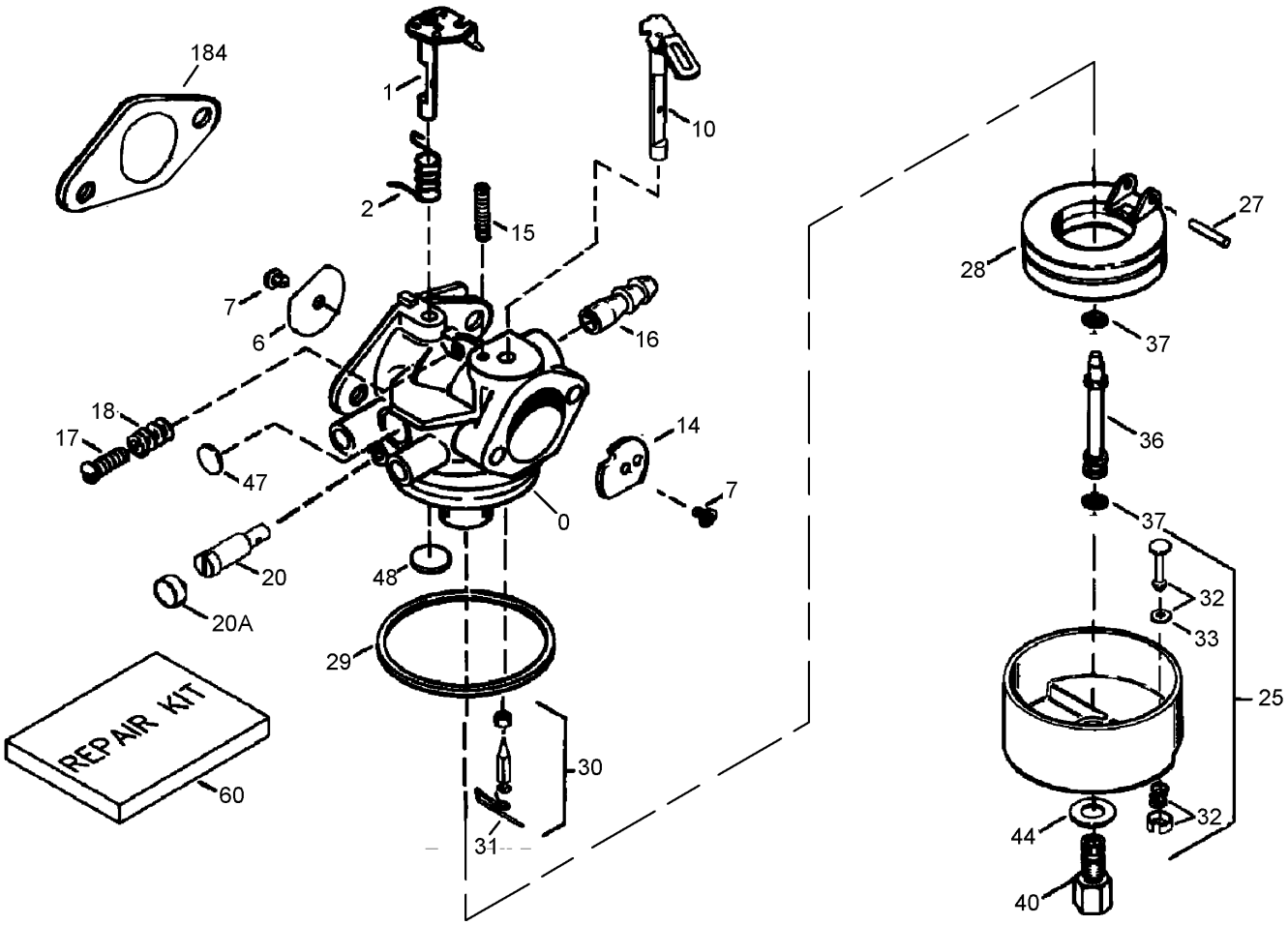


# Carburetor Assembly
# Tecumseh LH318SA-156564H

| Ref | Part No. | Qty. | Description |
|---|---|---|---|
| ❸0 | 640349 | 1 | Carburetor (Includes 184) |
| ❸1 | 631776A | 1 | Throttle Shaft And Lever ASM |
| ❸2 | 631970 | 1 | Spring-Return, Throttle |
| ❸6 | 640109 | 1 | Shutter-Throttle |
| ❸7 | 650506 | 2 | Screw-Shutter |
| ❸10 | 632112 | 1 | Choke Shaft And Lever ASM |
| ❸14 | 632174 | 1 | Shutter-Choke |
| ❸15 | 630735 | 1 | Spring-Positioning, Choke |
| ❸16 | 632164 | 1 | Fitting-Fuel |
| ❸17 | 651025 | 1 | Screw-Throttle Crack And Idle Speed |
| ❸18 | 630766 | 1 | Spring-Tension |
| ❸20 | 640027 | 1 | Screw-Restrictor, Idle |
| ❸20A | 640200 | 1 | Cap-Screw, Idle Restrictor |
| ❸25 | 631951 | 1 | Float Bowl ASM (Includes 32 And 33) |
| ❸27 | 631024 | 1 | Shaft-Float |
| ❸28 | 632802 | 1 | Float |
| ❸29 | 631028 | 1 | O Ring-Bowl, Float |
| ❸30 | 631021A | 1 | Inlet Needle, Seat, And Clip ASM (Inludes 31) |
| ❸31 | 631022 | 1 | Clip-Spring |
| ❸32 | 27136A | 1 | Bowl Drain ASM |
| ❸33 | 27554 | 1 | Gasket-Plunger, Drain |
| ❸36 | 640113 | 1 | Tube-Nozzle |

| Ref | Part No. | Qty. | Description |
|---|---|---|---|
| ❸37 | 632547 | 2 | O Ring-Nozzle Tube, Main |
| ❸40 | 640128 | 1 | Nut-Bowl, High Speed |
| ❸44 | 27110 | 1 | Washer |
| ❸47 | 630748 | 1 | Plug-Welch, Idle Mixture Well |
| ❸48 | 631027 | 1 | Plug-Welch, Atmospheric Vent |
| ❸60 | 632760B | 1 | Repair Kit (Includes 7, 27, 29, 30, 33, 37, 44, 47, 48) |
| ❸184 | 33263 | 1 | Gasket (Carburetor To Intake Pipe) |

# Engine Assembly
# Tecumseh LH318SA-156564H

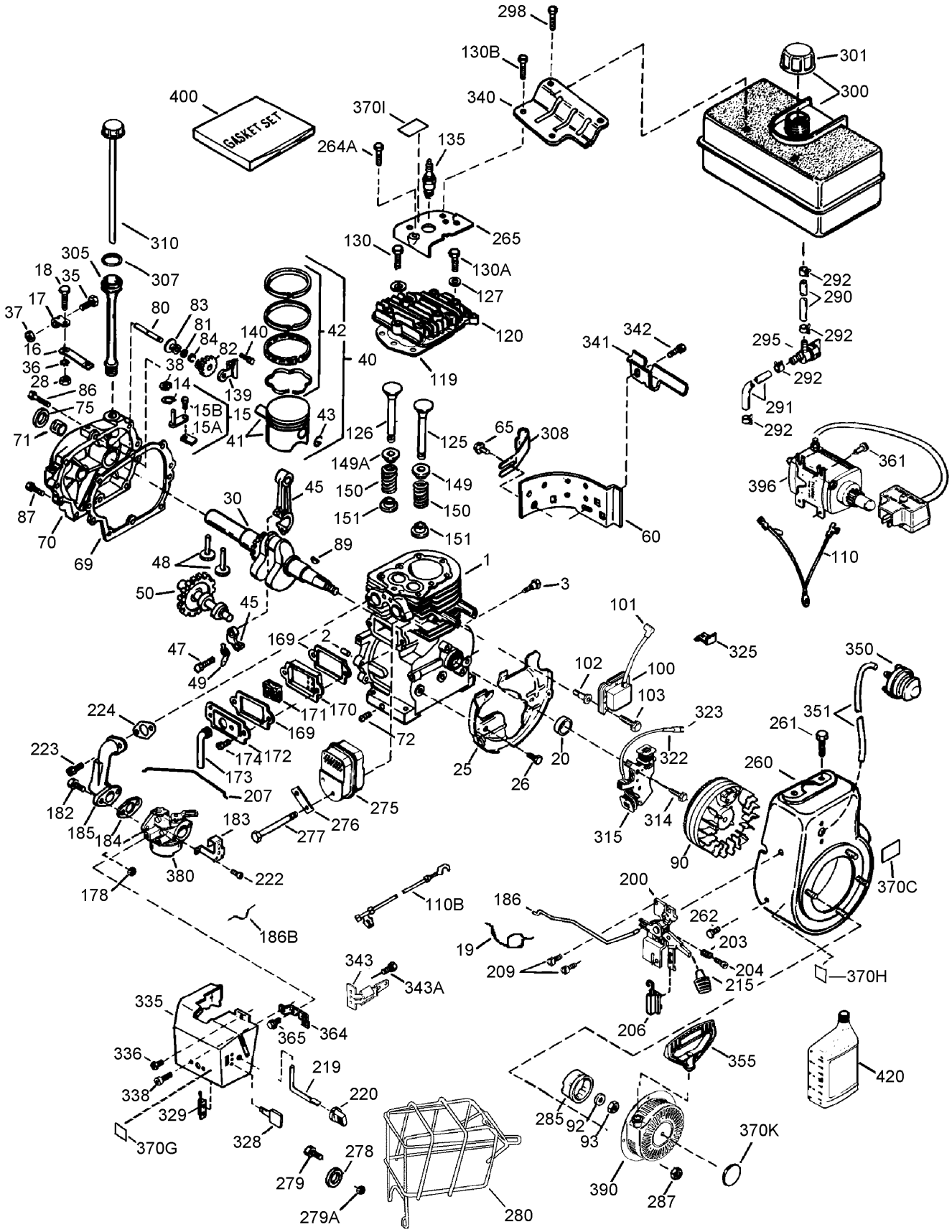

# Engine Assembly
# Tecumseh LH318SA-156564H

| Ref | Part No. | Qty. | Description |
|---|---|---|---|
| ❸1 | 35385 | 1 | Cylinder ASM (Includes 2, 20, 72) |
| ❶❸ | 756320C | 1 | Shortblock |
| ❸2 | 27652 | 2 | Pin-Dowel |
| ❸3 | 650820 | 2 | Screw (1/4-20 X 1/2In) |
| ❸14 | 28277 | 1 | Washer |
| ❸15 | 30699C | 1 | Rod-Governor (Includes 15A, 15B) |
| ❸15A | 30700 | 1 | Yoke-Governor |
| ❸15B | 650494 | 1 | Screw (6-40 X 5/16In) |
| ❸16 | 33454A | 1 | Lever-Governor |
| ❸17 | 29916 | 1 | Clamp-Lever, Governor |
| ❸18 | 651028 | 1 | Screw-Torx (T-15, 8-32 X 3/8In) |
| ❸19 | 34663 | 1 | Spring-Control, Speed |
| ❸20 | 35319 | 1 | Seal-Oil |
| ❸25 | 37853 | 1 | Baffle-Housing, Blower |
| ❸26 | 650561 | 2 | Screw (1/4-20 X 5/8In) |
| ❸28 | 30322 | 1 | Nut-Lock (8-32) |
| ❸30 | 35571A | 1 | Shaft-Crank |
| ❸35 | 29826 | 1 | Screw (10-32 X 3/4In) |
| ❸36 | 29918 | 1 | Washer-Lock |
| ❸37 | 29216 | 1 | Nut-Lock (10-32) |
| ❸38 | 29642 | 1 | Ring-Retaining |
| ❸40 | 40011 | 1 | Piston, Pin And Ring Set ASM (STD) |
| ❸40 | 40012 | 1 | Piston, Pin And Ring Set ASM (.010In Os) |
| ❸41 | 40009 | 1 | Piston And Pin ASM (STD) (Includes 43) |
| ❸41 | 40010 | 1 | Piston And Pin ASM (.010In Os) (Includes 43) |
| ❸42 | 40013 | 1 | Ring Set (STD) |
| ❸42 | 40014 | 1 | Ring Set (.010In Os) |
| ❸43 | 27888 | 2 | Ring-Retaining, Piston Pin |
| ❸45 | 36897 | 1 | Connecting Rod ASM (Includes 47, 49) |
| ❸47 | 651033 | 2 | Bolt-Rod, Connecting |
| ❸48 | 34034 | 2 | Lifter-Valve |
| ❸49 | 36896 | 1 | Dipper-Oil |
| ❸50 | 35375 | 1 | Camshaft (Mcr) |
| ❸60 | 33273A | 1 | Extension-Housing, Blower |
| ❸65 | 650128 | 1 | Screw (10-24 X 1/2In) |
| ❸69 | 37342 | 1 | Gasket-Cover, Cylinder |
| ❸70 | 37847 | 1 | Cover-Cylinder (Includes 71,75,80 - 84) |
| ❸71 | 35377 | 1 | Bushing-Crankshaft |
| ❸72 | 27642 | 1 | Plug-Drain, Oil |
| ❸75 | 35319 | 1 | Seal-Oil |
| ❸80 | 37587 | 1 | Shaft-Governor |
| ❸81 | 651080 | 1 | Washer |
| ❸82 | 37588 | 1 | Governor Gear ASM (Includes 81) |
| ❸83 | 30588A | 1 | Spool-Governor |
| ❸84 | 29193 | 1 | Ring-Retaining |
| ❸86 | 650833 | 7 | Screw (1/4-20 X 1-3/16In) |
| ❸87 | 650832 | 1 | Screw (1/4-20 X 1-11/16In) |

| Ref | Part No. | Qty. | Description |
|---|---|---|---|
| ❸89 | 32589 | 1 | Key-Flywheel |
| ❸90 | 611093 | 1 | Flywheel ASM |
| ❸92 | 650880 | 1 | Washer-Lock |
| ❸93 | 650881 | 1 | Nut-Flywheel |
| ❸100 | 35135A | 1 | Ignition-State, Solid (Includes 101) |
| ❸101 | 610118 | 1 | Cover-Plug, Spark |
| ❸102 | 651024 | 2 | Stud-Mounting, Solid State |
| ❸103 | 651007 | 2 | Screw |
| ❸110 | 35187 | 1 | Wire-Ground |
| ❸110B | 37047 | 1 | Wire-Ground |
| ❸119 | 36448 | 1 | Gasket-Head, Cylinder |
| ❸120 | 36449 | 1 | Head-Cylinder |
| ❸125 | 27878A | 1 | Valve-Exhaust (STD) (Includes 151) |
| ❸125 | 27880A | 1 | Valve-Exhaust (1/32In Os) (Includes 151) |
| ❸126 | 34035 | 1 | Valve-Intake (STD.) (Includes 151) |
| ❸127 | 650691 | 2 | Washer |
| ❸130 | 6021A | 7 | Screw (5/16–18 X 1–7/16In) |
| ❸130A | 650727 | 2 | Screw (5/16-18 X 1-25/32In) |
| ❸130B | 651055 | 2 | Screw (5/16-18 X 39/64In) |
| ❸135 | 35395 | 1 | Spark Plug-Resistor |
| ❸139 | 33369 | 1 | Bracket-Gear, Governor |
| ❸140 | 650836 | 2 | Screw (10-24 X 1/2In) |
| ❸149 | 27882 | 1 | Cap-Spring, Valve |
| ❸149A | 35862 | 1 | Cap-Spring, Valve |
| ❸150 | 27881 | 2 | Spring-Valve |
| ❸151 | 32581 | 2 | Keeper-Spring, Valve |
| ❸169 | 27896A | 2 | Gasket-Cover, Valve |
| ❸170 | 28423 | 1 | Body-Breather |
| ❸171 | 28424 | 1 | Element-Breather |
| ❸172 | 28425 | 1 | Cover-Valve |
| ❸173 | 35350 | 1 | Tube-Breather |
| ❸174 | 650128 | 2 | Screw (10-24 X 1/2In) |
| ❸178 | 29752 | 2 | Nut And Lock Washer ASM |
| ❸182 | 30088A | 2 | Screw (1/4-28 X 1In) |
| ❸183 | 34587A | 1 | Bracket-Choke |
| ❸184 | 33263 | 1 | Gasket (Carburetor To Intake Pipe) |
| ❸185 | 33877 | 1 | Pipe-Intake |
| ❸186 | 34667 | 1 | Link-Governor |
| ❸186B | 36652 | 1 | Spring-Choke |
| ❸200 | 34677 | 1 | Bracket-Control (Includes 19, 203, 204, 206) |
| ❸203 | 31342 | 1 | Spring-Compression |
| ❸204 | 651029 | 1 | Screw (5-40 X 7/16In) |
| ❸206 | 610973 | 1 | Terminal |
| ❸207 | 33878 | 1 | Link-Throttle |
| ❸209 | 650821 | 2 | Screw (10-32 X 1/2In) |
| ❸215 | 35440 | 1 | Knob-Control |
| ❸219 | 34586 | 1 | Rod-Choke |

# Engine Assembly (continued)
# Tecumseh LH318SA-156564H

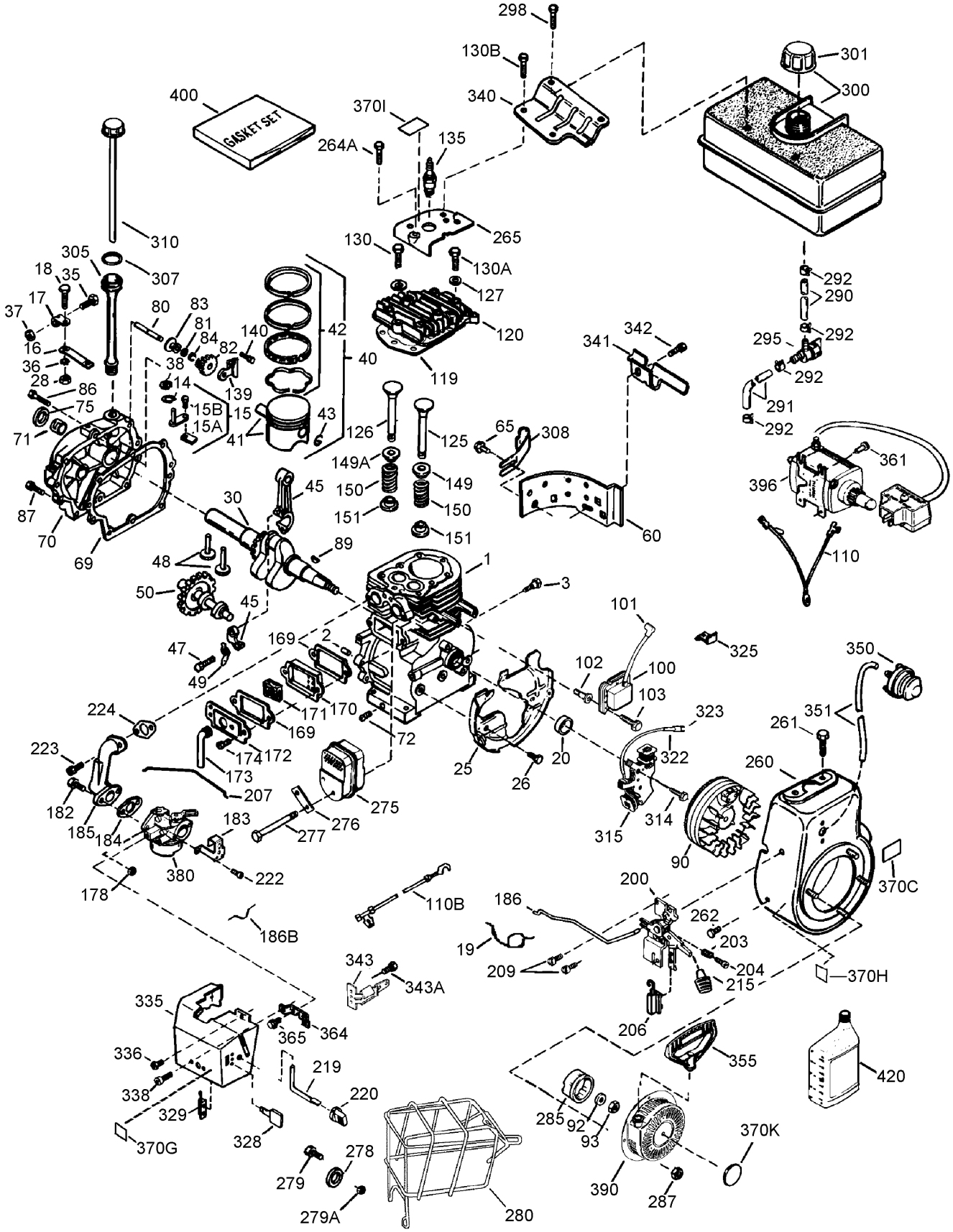

# Engine Assembly (continued)
# Tecumseh LH318SA-156564H

| Ref | Part No. | Qty. | Description |
|---|---|---|---|
| ❸264A | 650802 | 1 | Screw (1/4-20 X 5/8In) |
| ❸265 | 33272D | 1 | Cover-Head, Cylinder |
| ❸275 | 35056 | 1 | Muffler |
| ❸276 | 31588 | 1 | Plate-Locking |
| ❸277 | 651002 | 2 | Screw (5/16-18 X 4-3/16In) |
| ❸278 | 650147 | 2 | Washer-Flat |
| ❸279 | 650980 | 2 | Screw (10-16 X 47/64) |
| ❸279A | 650979 | 2 | Washer-Lock |
| ❸280 | 36294 | 1 | Muffler Heat Shield ASM (Includes 278, 279, 279A) |
| ❸285 | 35985C | 1 | Cup-Starter |
| ❸287 | 29752 | 4 | Nut And Lock Washer ASM |
| ❸290 | 29774 | 1 | Line-Fuel |
| ❸291 | 30705 | 1 | Line-Fuel |
| ❸292 | 26460 | 4 | Clamp-Line, Fuel |
| ❸295 | 35857 | 1 | Valve-Shut Off, Fuel (Includes 292) |
| ❸298 | 650665 | 2 | Screw (1/4-15 X 3/4In) |
| ❸300 | 34156A | 1 | Tank-Fuel (Includes 292, 301) |
| ❸301 | 37844 | 1 | Fuel Cap ASM |
| ❸305 | 36877 | 1 | Tube-Fill, Oil |
| ❸307 | 35499 | 1 | O–Ring |
| ❸308 | 35539 | 1 | Clip |
| ❸310 | 37869 | 1 | Dipstick |
| ❸314 | 650873 | 1 | Screw (1/4-20 X 3/4In) |
| ❸315 | 611111 | 1 | Coil-Alternator, 18 Watt (Includes 322, 323) |
| ❸322 | 611117 | 1 | Body-Connector |
| ❸323 | 611118 | 1 | Terminal |
| ❸325 | 29443 | 1 | Clip-Wire |
| ❸328 | 35062 | 2 | Key-Ignition |
| ❸329 | 610973 | 1 | Terminal |
| ❸335 | 36547 | 1 | Cover-Carburetor |
| ❸336 | 650765 | 1 | Screw (10-32 X 1/2In) |
| ❸338 | 28942 | 2 | Screw (10-32 X 3/8In) |
| ❸340 | 34154 | 1 | Bracket-Tank, Fuel |
| ❸341 | 34155 | 1 | Bracket-Tank, Fuel |
| ❸342 | 650561 | 1 | Screw (1/4-20 X 5/8In) |
| ❸343 | 35079A | 1 | Bracket-Switch, Key (Includes 343A) |
| ❸343A | 651060 | 1 | Screw (10-32 X 23/64In) |
| ❸350 | 570682A | 1 | Primer ASM |
| ❸351 | 32180C | 1 | Line-Primer (12In) |
| ❸355 | 590574 | 1 | Handle-Grip, Mitten |
| ❸361 | 650990 | 2 | Screw (T-30, 1/4-20 X 15/32In) |
| ❸364 | 37659 | 1 | Bracket-Cover, Carburetor |
| ❸365 | 650767 | 2 | Screw (8-32 X 27/64In) |
| ❸370C | 36501 | 1 | Decal-Primer |
| ❸370G | 36534 | 1 | Decal-Caution |
| ❸370H | 35077 | 1 | Decal-Instruction |
| ❸370I | 37119 | 1 | Decal-Warning |
| ❸370K | 36695 | 1 | Decal-Starter |
| ❸380 | 640349 | 1 | Carburetor (Includes 184) |

| Ref | Part No. | Qty. | Description |
|---|---|---|---|
| ❸390 | 590749 | 1 | Starter-Rewind (Note: This Engine Could Have Been Built With Starter 590733) |
| ❸396 | 37102 | 1 | 220 Volt Electric Motor ASM |
| ❸400 | 36450C | 1 | Gasket Set (Includes 69, 119, 169, 184, 224) |
| ❸420 | 730226A | 1 | Oil-Sae 5W30 (Quart) |

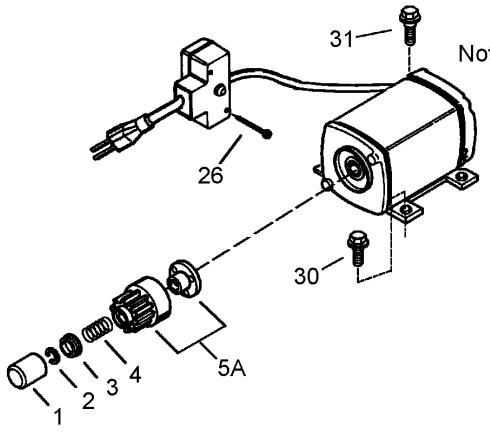


Note: Internal parts are not serviced.
In the event of electrical failure,
the entire motor must be replaced.

# Electric Starter Assembly
# Tecumseh LH318SA-156564H

| Ref | Part No. | Qty. | Description |
|---|---|---|---|
| ❸0 | 37102 | 1 | 220 Volt Electric Motor ASM |
| ❸1 | 33451 | 1 | Cover-Dust |
| ❸2 | 33842 | 1 | Ring-Retainer |
| ❸3 | 33430 | 1 | Retainer-Spring |
| ❸4 | 33431 | 1 | Spring-Anti Drift |
| ❸5A | 37050 | 1 | Gear And Nut (Includes 2) |
| ❸26 | 650819 | 2 | Screw (6-32 X 2-1/2In) |
| ❸26 | 651032 | 2 | Screw (12-16 X 5/8In) |
| ❸30 | 30063 | 2 | Screw (Torx T-30, 1/4-20 X 1/2In) |
| ❸31 | 650820 | 2 | Screw (1/4-20 X 1/2In) |

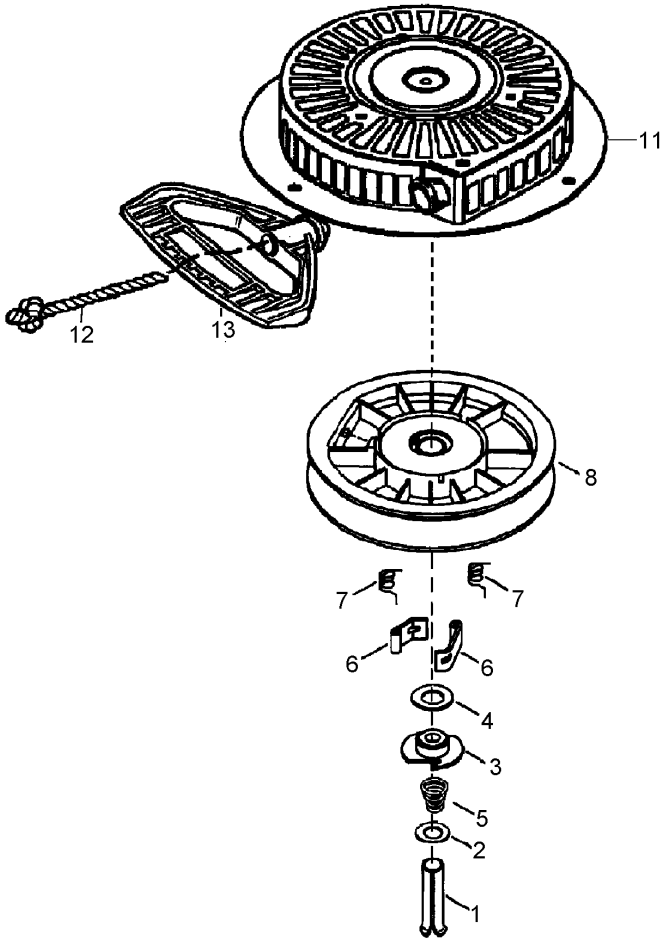


# Recoil Starter Assembly
# Tecumseh LH318SA-156564H

| Ref | Part No. | Qty. | Description |
|---|---|---|---|
| ❸0 | 590749 | 1 | Starter-Rewind |
| ❸1 | 590599A | 1 | Spring Pin ASM (Includes 4) |
| ❸2 | 590600 | 1 | Washer |
| ❸3 | 590679 | 1 | Retainer |
| ❸4 | 590601 | 1 | Washer |
| ❸5 | 590678 | 1 | Spring-Brake |
| ❸6 | 590680 | 2 | Dog-Starter |
| ❸7 | 590412 | 2 | Spring-Dog |
| ❸8 | 590682 | 1 | Pulley And Rewind Spring ASM |
| ❸11 | 590750A | 1 | Starter Housing ASM |
| ❸12 | 590535 | 1 | Rope-Starter (98In X 9/64In Diameter) |
| ❸13 | 590574 | 1 | Handle-Grip, Mitten (Not Included With Starter) |

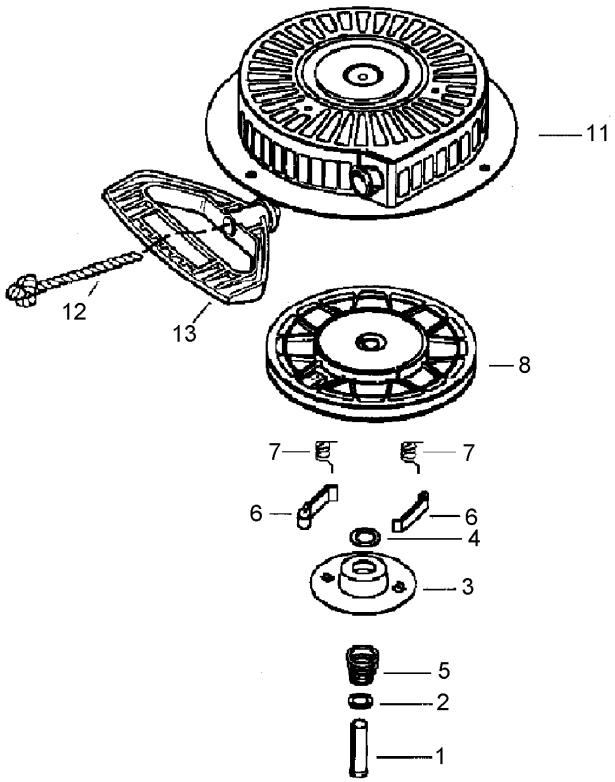


# Recoil Starter Assembly (Optional)
# Tecumseh LH318SA-156564H

| Ref | Part No. | Qty. | Description |
|---|---|---|---|
| ❸0 | 590733 | 1 | Starter-Rewind |
| ❸1 | 590599A | 1 | Spring Pin ASM (Includes 4) |
| ❸2 | 590600 | 1 | Washer |
| ❸3 | 590696 | 1 | Retainer |
| ❸4 | 590601 | 1 | Washer |
| ❸5 | 590697 | 1 | Spring-Brake |
| ❸6 | 590698 | 2 | Dog-Starter |
| ❸7 | 590699 | 2 | Spring-Dog |
| ❸8 | 590709 | 1 | Pulley And Rewind Spring ASM |
| ❸11 | 590734A | 1 | Starter Housing ASM |
| ❸12 | 590535 | 1 | Rope-Starter (98In X 9/64In Diameter) |
| ❸13 | 590574 | 1 | Handle-Grip, Mitten (Not Included With Starter) |

# Attachments and Accessories

## For 38621 - Power Max 826LE Snowthrower

| Product Name | Model/Part |
|---|---|
| Tire Chain Kit | 107-3813 |
| Snow Cab | 107-3814 |
| Weight Kit | 107-3815 |
| 26in Drift Breaker | 107-3816 |

# NOTES

# NOTES


TORO®