Form Number 3353-627 Rev A

Power Max 828LE
Snowthrower

Model No. 38635 - 260000001 and up.

Parts Catalog

Ordering Replacement Parts
To order replacement parts, please supply the part number, the quantity, and the description of each part desired.

Understanding Reference Numbers
Each Identified part in an illustration has a reference number. The reference number for a part also appears in the parts list, along with other information about the part.

This catalog uses two special reference number formats, one to indicate parts in a service assembly and another to indicate the quantity of a given part in an illustration.

Service Assembly Reference Numbers
Parts in service assemblies have reference numbers in the form a:b. The a represents the reference number of the entire service assembly and the b represents a sequential number unique to each part within the service assembly.

For example, a wheel assembly might be identified by reference number 6, the tire by 6:1, the valve by 6:2, and the wheel by 6:3. When you order the assembly identified by reference number 6, you receive all parts identified by reference numbers 6:1, 6:2, and 6:3. However, you may also order any part individually. Reference numbers of this type appear in illustrations and in part lists.

Reference Numbers Indicating Quantity
In an illustration, if a reference number indicates more than one part, the reference number has the form nX y. The n represents the quantity of the part, the X is the multiplication symbol, and the y represents the reference number.

For example, in an illustration, the reference number 2X 37 means that two of the parts identified by reference number 37 are indicated.

© The Toro Company - 2005
All Rights Reserved

Register your product at www.Toro.com

Contents

Description	Page
Auger and Housing Assembly	3
28in Auger Gearcase Assemlby No. 108-7329	4
Chute Assembly	5
Chain Drive Assembly	6
Control Panel Assembly	7
Frame Assembly	8
Handle, Headlamp and Control Assembly	10
Lever Chute Control Assembly	11
Engine Assembly	12
Carburetor Assembly Tecumseh LH318SA-156564H	13
Engine Assembly Tecumseh LH318SA-156564H	14
Engine Assembly (continued) Tecumseh LH318SA-156564H	16
Electric Starter Assembly Tecumseh LH318SA-156564H	18
Recoil Starter Assembly Tecumseh LH318SA-156564H	19
Recoil Starter Assembly (Optional) Tecumseh LH318SA-156564H	20
Attachments and Accessories List	21

Part Description Abbreviations

Part descriptions in this catalog may include the following abbreviations.

AR. . . . . as required
ASM. . . . . assembly
BBC. . . . . blade brake clutch
CARR. . . . . carriage
DEG. . . . . degrees
EXT. . . . . external
FH. . . . . flat head
GA. . . . . gauge
HF. . . . . hex flange
HH. . . . . hex head
HHF. . . . . hex head flange
HHFTF. . . . . hex head flange thread forming
HJ. . . . . hex jam
HLH. . . . . hex lag head
HOC. . . . . height-of-cut
HSBH. . . . . hex socket button head
HSFH. . . . . hex socket flat head
HSH. . . . . hex socket head
HWH. . . . . hex washer head
HWHTF. . . . . hex washer head thread forming
HYD. . . . . hydraulic
INC. . . . . incorporated
LH. . . . . left hand
NI. . . . . nylon insert
NPTF. . . . . national pipe thread fine
PFH. . . . . phillips flat head
PPH. . . . . phillips pan head
PPHTF. . . . . phillips pan head thread forming
PRH. . . . . phillips round head
PTH. . . . . phillips truss head
PTO. . . . . power-take-off
RH. . . . . right hand
ROPS. . . . . roll-over-protection-system
SFH. . . . . slotted fillister head
SHH. . . . . slotted hex head
SHWH. . . . . slotted hex washer head
SPH. . . . . slotted pan head
SQH. . . . . square head
SRH. . . . . slotted round head
STD. . . . . standard
TAP. . . . . self tapping
TTH. . . . . torx truss head

Footnotes

❶ Not illustrated
❷ Not serviced separately
❸ Obtain from your local Tecumseh dealer

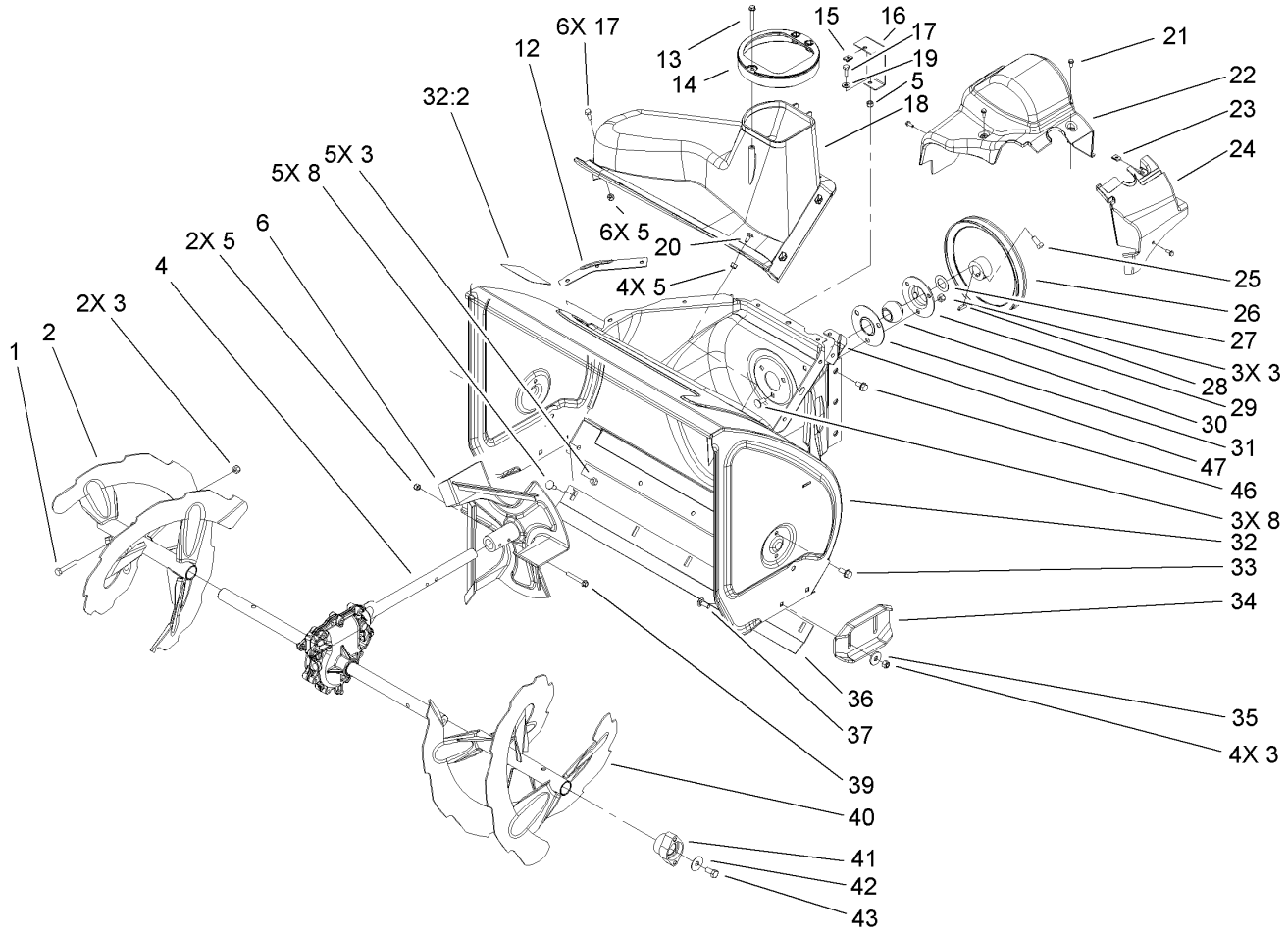

Auger and Housing Assembly

Ref	Part No.	Qty.	Description
1	322-21	2	Screw-HH
2	106-7291-03	1	Auger-RH
3	3296-29	14	Nut-Lock, NI
4	108-7329	1	Auger Gearcase ASM
5	3296-42	13	Nut-Lock, NI
6	106-4576-03	1	Impeller ASM
8	3230-23	8	Screw-CARR
12	107-1017-03	1	Seal-Flange, Cover
13	107-3003	1	Screw-Plastite
14	107-3006	1	Guide-Chute
15	107-1013	1	Nut-Speed, U-Type
16	107-1014-03	1	Bracket-Cover, Clip Nut
17	321-4	7	Screw-HH
18	108-0017	1	Cover
19	3256-22	1	Washer-Flat
20	3229-1	4	Screw-CARR
21	32144-112	4	Screw-HWH
22	107-1001	1	Cover-Belt
23	701493	1	Nut-Speed
24	107-1016	1	Cover-Extension, Belt
25	3242-4	2	Screw-Set, SQH
26	62-1300	1	Pulley-Impeller
27	252-80	1	Washer-Thrust
28	3257-23	1	Key-Woodruff

Ref	Part No.	Qty.	Description
29	26-6110	1	Flange-Cup, Bearing
30	63-3450	1	Bearing-Ball
31	26-6120	1	Flange-Cup, Bearing
32	107-3824	1	Auger Housing ASM
32:2	107-3040	1	Decal-Danger, Auger
33	32144-70	4	Screw-HH
34	106-4588-01	2	Skid
35	52-2861	4	Washer
36	106-4573-01	1	Scraper-Fixed
37	3230-16	4	Screw-CARR
39	321-44	2	Screw-HHF
40	106-7301-03	1	LH Auger ASM
41	106-4570	2	Auger-Bearing
42	3-0750	2	Washer
43	323-4	2	Screw-HH
46	32144-14	6	Screw-HWH
47	108-0039-03	1	Seal

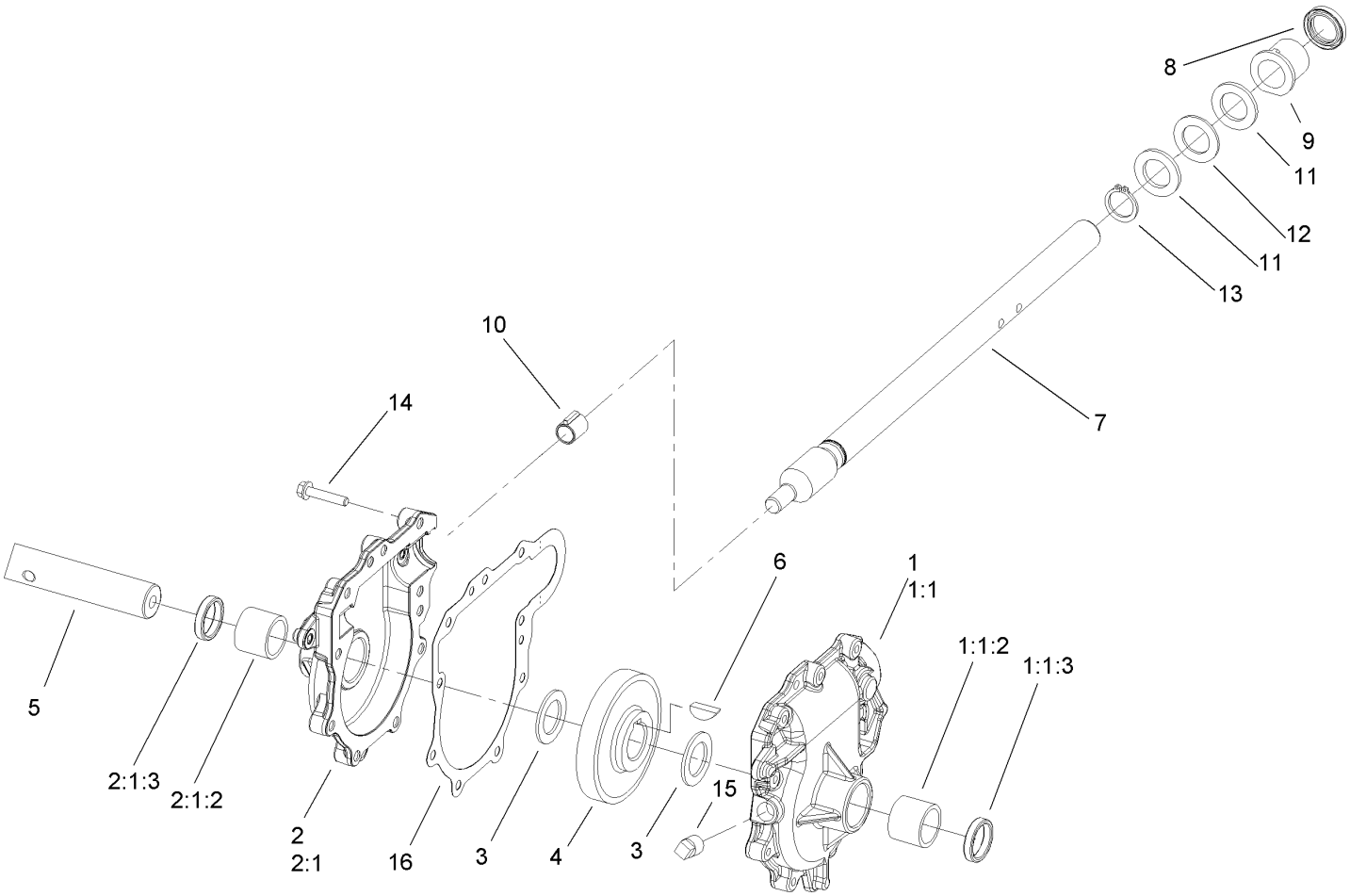

28in Auger Gearcase Assemlby No. 108-7329

Ref	Part No.	Qty.	Description
1	108-7325	1	LH Auger Gearcase ASM
❷1:1		1	LH Auger Gearcase ASM
1:1:2	256-237	1	Bushing
1:1:3	7-0045	1	Seal-Oil
2	108-7327	1	RH Auger Gearcase ASM
❷2:1		1	RH Auger Gearcase ASM
2:1:2	256-237	1	Bushing
2:1:3	7-0045	1	Seal-Oil
3	252-71	2	Washer-Thrust
4	62-0120	1	Gear-Helical
5	106-4421	1	Shaft-Auger
6	3257-10	1	Key-Woodruff
7	66-7811	1	Shaft-Impeller
8	253-149	1	Seal-Oil
9	37-6560	1	Bushing-Input
10	62-1150	1	Bushing-Worm
11	252-78	2	Bearing-Thrust
12	252-76	1	Bearing-Thrust
13	32151-33	1	Ring-Retaining, EXT
14	108-4862	9	Screw HWH, Thd Form
15	281-1	1	Plug-Pipe, SQH
16	108-7330	1	Gasket-Auger Gearcase

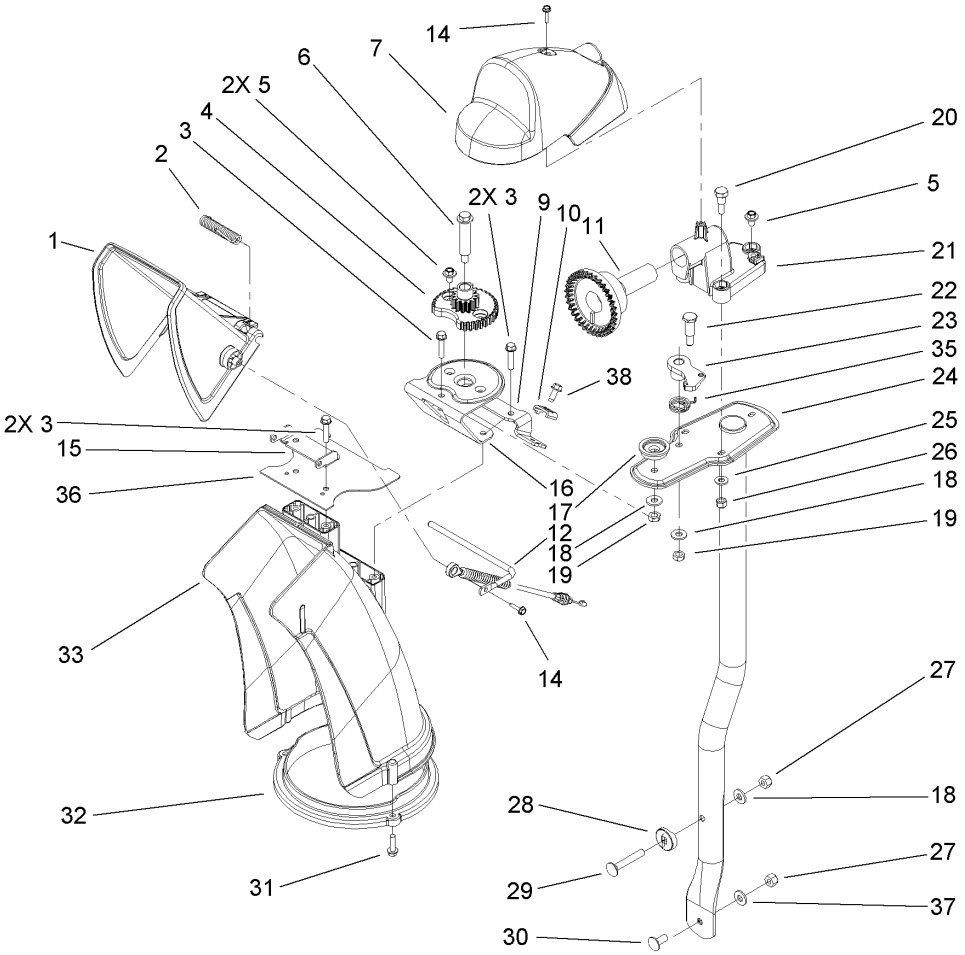

Chute Assembly

Ref	Part No.	Qty.	Description
1	106-7309	1	Deflector-Chute
2	106-4594	1	Spring-Torsion
3	46-8092	5	Screw-Plastite
4	106-4472	1	Gear-Chute
5	46-6810	3	Screw And Washer ASM
6	100-9880	1	Bolt-Shoulder
7	106-4585	1	Cover-Gear, Chute
9	106-7296	1	Bracket-Cable, Clamp
10	106-7297	1	Clamp-Cable
11	106-4471	1	Gear-Face
12	107-1021	1	Rod-Deflector
14	98-1375	2	Screw-HWH
15	106-7266	1	Bracket-Deflector
16	106-4582-03	1	Bracket-Support, Chute
17	106-4422	1	Spacer-Chute
18	3256-2	3	Washer-Flat
19	3296-47	2	Nut-Lock, NI
20	106-7276	3	Screw-Shoulder
21	106-7257	1	Mount-Gear, Face
22	63-2650	1	Screw-Shoulder
23	106-4476	1	Latch-Chute
24	106-7253-03	1	Tube-Support
25	3256-22	3	Washer-Flat
26	3296-42	3	Nut-Lock, NI

Ref	Part No.	Qty.	Description
27	3296-29	2	Nut-Lock, NI
28	106-7260	1	Washer-Curved
29	3230-5	1	Screw-CARR
30	3230-23	1	Screw-CARR
31	46-8091	3	Screw-HWH
32	105-9991	1	Ring-Chute
33	106-4440	1	Chute-Discharge
35	108-7315	1	Spring-Torsion
36	108-5052	1	Seal-Chute
37	3290-456	1	Washer-Belleville
38	32144-10	1	Screw-HWH

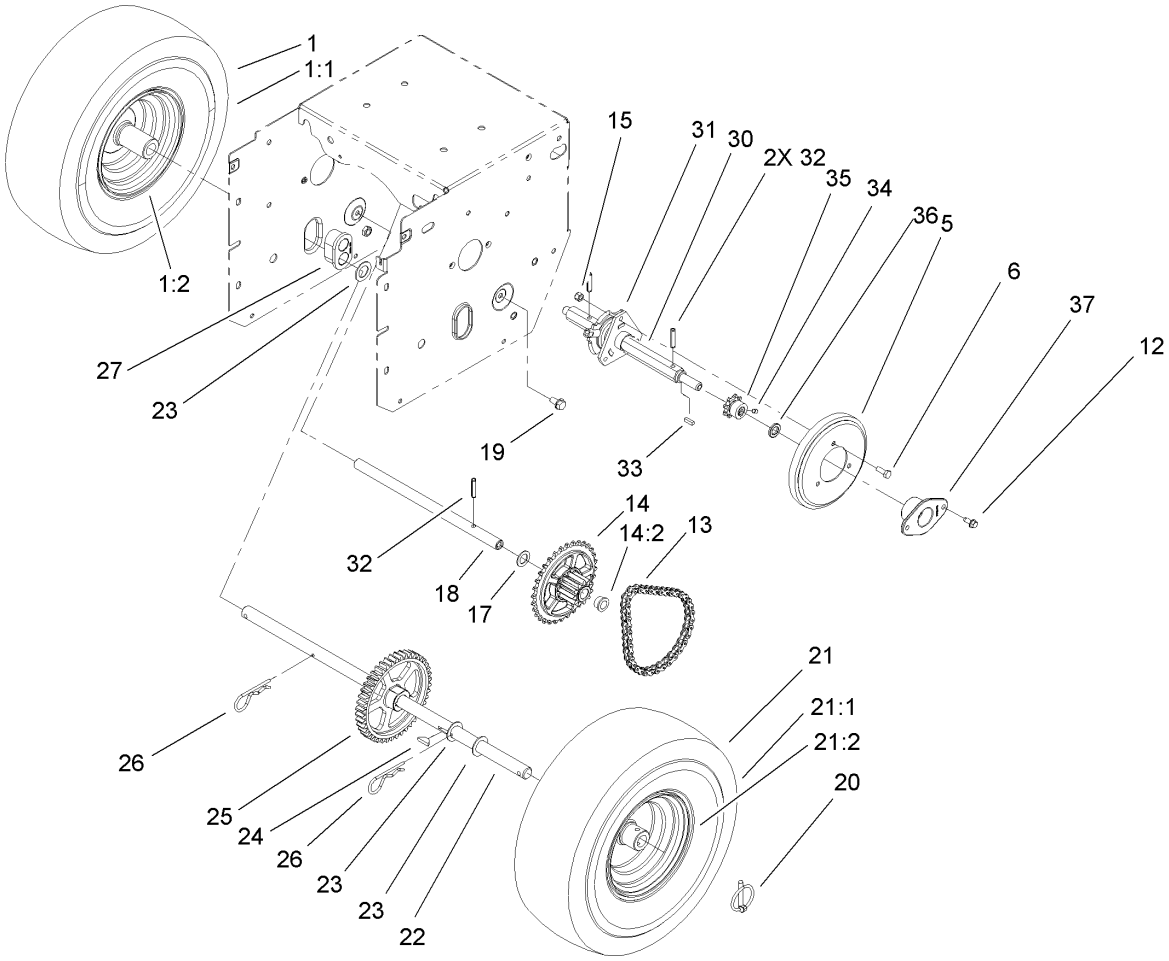

Chain Drive Assembly

Ref	Part No.	Qty.	Description
❷1		1	RH Wheel And Tire ASM
1:1	107-3042	1	Tire
1:2	107-3043	1	Rim-Tire
5	106-4480	1	Wheel-Friction
6	321-4	3	Screw-HH
12	32144-10	4	Screw-HWH
13	108-0016	1	Chain-Roller
13	2710-6	1	Link-Connecting
14	108-0013	1	Sprocket ASM
14:2	108-2974	2	Bushing-Flange
15	3296-42	3	Nut-Lock, NI
17	107-3041	1	Washer-Flat
18	106-4592	1	Shaft-Intermediate
19	32144-14	2	Screw-HWH
20	107-3039	2	Klik Pin ASM
❷21		1	LH Wheel And Tire ASM
21:1	107-3042	1	Tire
21:2	107-3043	1	Rim-Tire
22	106-4449	1	Shaft-Axle
23	3-8664	3	Washer-Thrust
24	3257-7	1	Key-Woodruff
25	106-4572	1	Gear-Axle, 44 Tooth
26	3290-343	2	Pin-Hair
27	106-4558	2	Bearing-Axle

Ref	Part No.	Qty.	Description
30	108-5054	1	Shaft-Hex
31	106-4434	1	Trunion-Hex
32	32121-9	3	Pin-Roll, Slotted
33	94-8850	1	Key-Square
34	3245-32	2	Screw-HSH
35	106-7317	1	Sprocket-8 Tooth
36	108-5059	1	Spacer-Bushing
37	108-7319	2	Retainer-Bearing

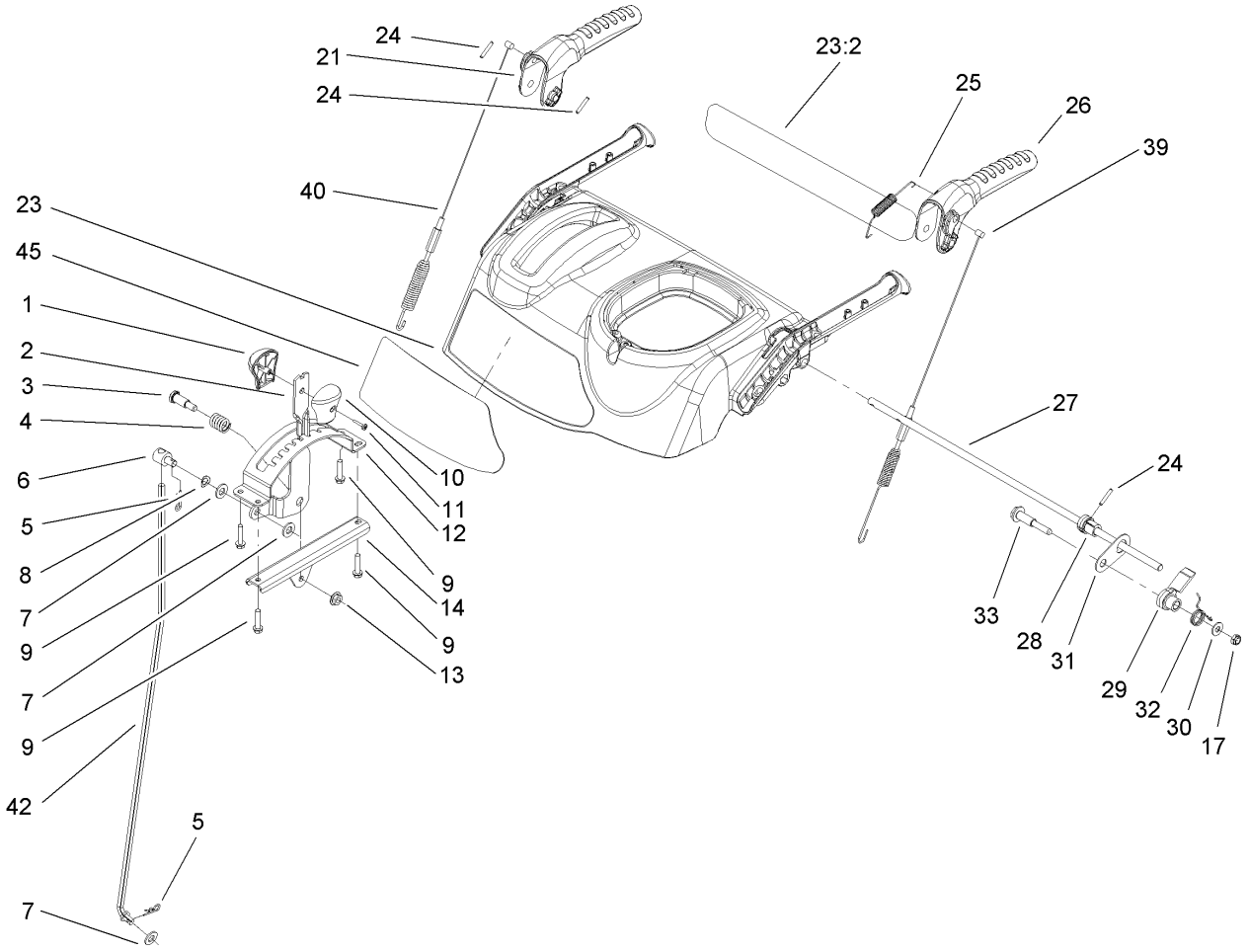

Control Panel Assembly

Ref	Part No.	Qty.	Description
1	106-4423	1	Knob-Shift, RH
2	106-7278-03	1	Selector-Speed
3	63-2650	1	Screw-Shoulder
4	108-7313	1	Spring-Compression
5	3290-307	2	Pin-Hair
6	101161	1	Trunnion
7	3256-24	3	Washer-Flat
8	612586	1	Washer-Spring
9	46-8092	4	Screw-Plastite
10	105-9999	1	Knob-Shift, LH
11	94-4496	1	Screw-PPH
12	106-7277-03	1	Guide-Selector, Speed
13	32128-13	1	Nut-HF
14	106-7279-03	1	Mount-Selector, Speed
17	3296-72	1	Nut-Lock, NI
21	106-4413	1	Lever-Auger
23	107-3826	1	Control Panel ASM
23:2	106-4523	1	Decal-Panel, Back Control
24	32121-125	3	Pin-Spring
25	107-3001	1	Spring-Tension
26	106-4410	1	Lever-Traction
27	105-9996	1	Rod-Lockout
28	107-1043	1	Cam-Lockout
29	108-0023	1	Latch-Lockout

Ref	Part No.	Qty.	Description
30	98-3499	1	Washer-Flat
31	107-3000	1	Link-Lockout
32	108-0024	1	Spring-Torsion
33	106-4412	1	Screw-Shoulder
39	106-4563	1	Cable-Traction
40	106-4599	1	Cable-Auger
42	107-1005	1	Rod-Shift
45	107-3031	1	Decal-Control Panel

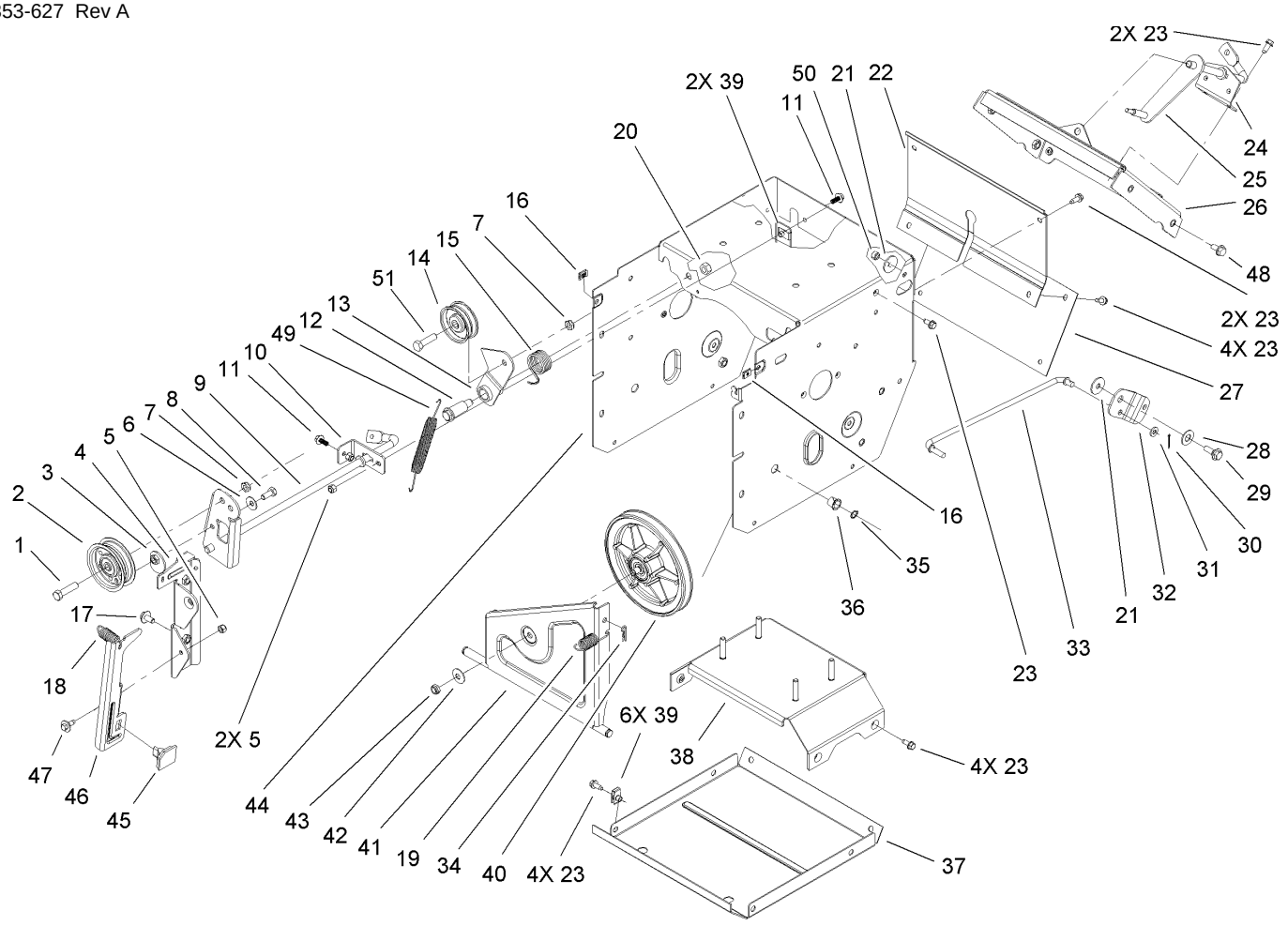

Frame Assembly

Ref	Part No.	Qty.	Description
1	323-8	1	Screw-HH
2	92-7104	1	Pulley-Idler
3	107-1047	1	Nut
4	107-1039	1	Bracket-Idler, Impeller
5	3296-42	3	Nut-Lock, NI
6	3290-456	1	Washer-Belleville
7	3296-59	2	Nut-Lock, NI
8	322-3	1	Screw-HH
9	107-3838-03	1	Impeller Clutch ASM
10	106-7341	1	Bracket-Rear, Clutch
11	99-6810	2	Screw-HH
12	108-5056	1	Bolt-Shoulder
13	108-5058	1	Arm-Idler, Traction
14	3-4244	1	Pulley-Idler
15	108-7332	1	Spring-Torsion
16	107-1013	2	Nut-Speed, U-Type
17	3234-7	2	Screw-HHF
18	107-1045	1	Spring-Extension
19	107-1003	1	Spring-Extension
20	3296-76	1	Nut-Lock, NI
21	5-4460	2	Washer-Pivot
22	106-4556-01	1	Cover-Upper
23	32144-10	17	Screw-HWH
24	108-0036	1	Bracket-Shift Rod

Ref	Part No.	Qty.	Description
25	106-7268	1	Lever-Control, Traction
26	108-0026-01	1	Shift Plate ASM
27	106-7345-01	1	Cover-Lower
28	25-5640	1	Washer
29	27-0410	1	Screw-Shoulder
30	3272-4	1	Pin-Cotter
31	3256-23	1	Washer-Flat
32	107-1011	1	Bellcrank-Drive
33	106-4467	1	Link-Control, Speed
34	3290-307	1	Pin-Hair
35	32151-61	2	Ring-Retaining
36	256-257	2	Bushing-Nyliner
37	106-7330-01	1	Pan-Bottom
38	106-7315	1	Brace Frame ASM
39	107069	8	Clip
40	108-0031	1	Traction Pulley ASM
41	108-7307	1	Friction Wheel Bracket ASM
42	3290-340	1	Washer-Belleville
43	3296-5	1	Nut-Lock
44	108-0019-01	1	Traction Frame ASM
45	66-8060	1	Pad-Brake
46	107-1000	1	Arm-Brake
47	92-9698	1	Screw-Shoulder
48	32144-14	4	Screw-HWH

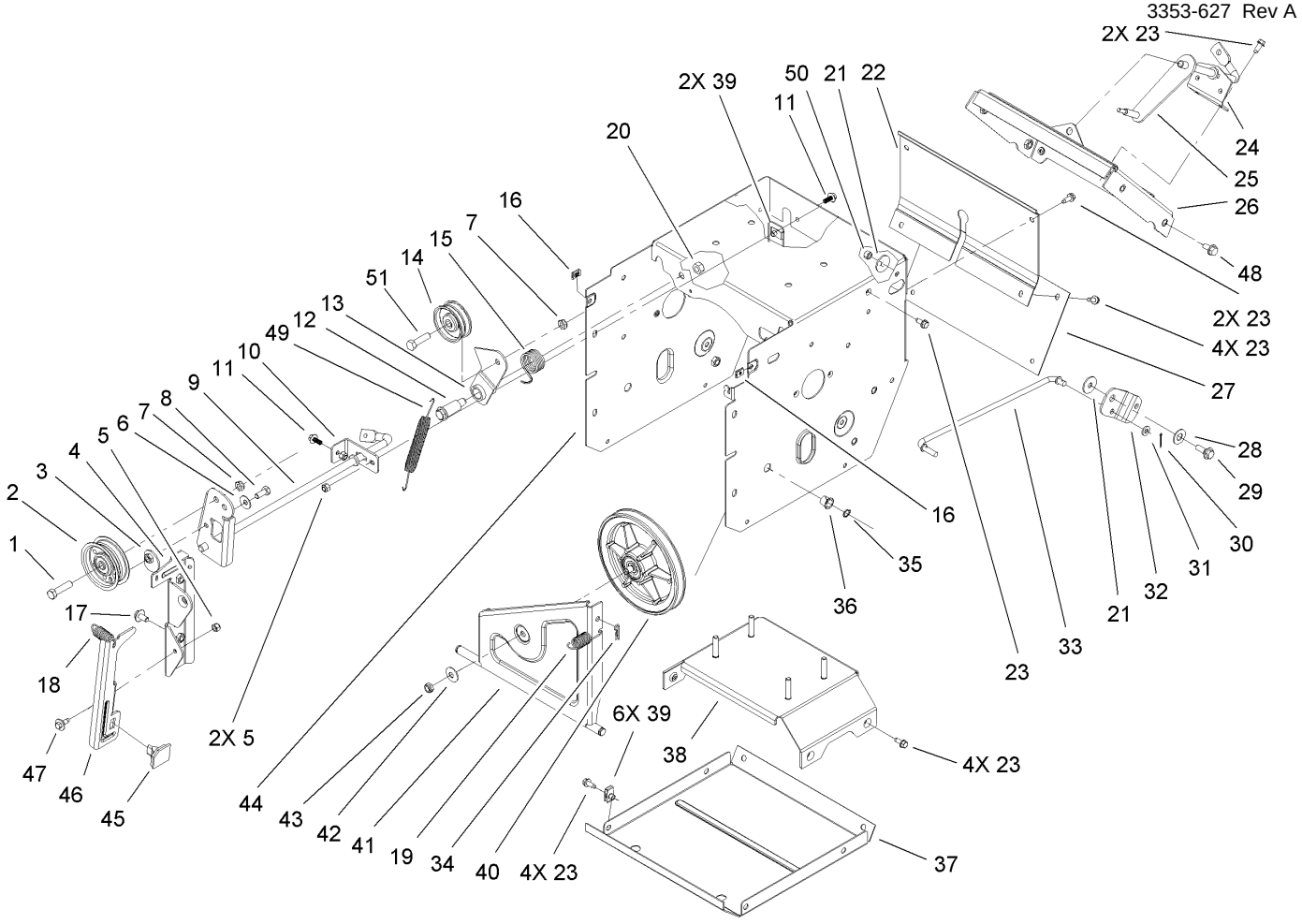

Frame Assembly (continued)

Ref	Part No.	Qty.	Description
49	108-2976	1	Spring-Extension
50	3296-29	1	Nut-Lock, NI
51	323-29	1	Screw-HH

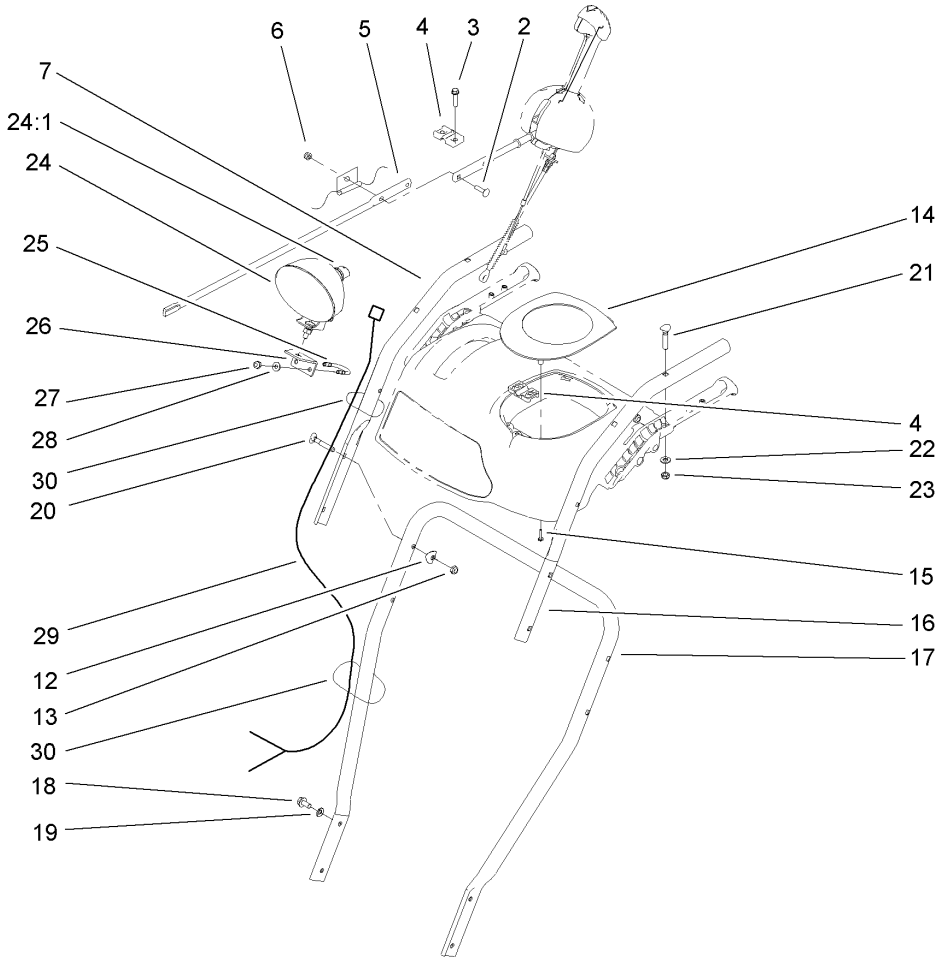

Handle, Headlamp and Control Assembly

Ref	Part No.	Qty.	Description
2	3229-30	2	Screw-CARR
3	46-8092	2	Screw-Plastite
4	105-9987	2	Support-Rod
5	106-7283	1	Rod-Chute, Front
6	3296-73	2	Nut-Lock, NI
7	108-0038-03	1	Handle-Upper, RH
12	107-3844	4	Washer
13	3296-72	4	Nut-Lock, NI
14	106-4586	1	Cover-Panel, Control
15	94-4496	2	Screw-PPH
16	108-0037-03	1	Handle-Upper, LH
17	105-9981-03	1	Handle-Lower
18	32144-14	4	Screw-HWH
19	3290-475	4	Washer-Belleville
20	92-2260	4	Screw-Handle
21	107-3018	4	Screw-Handle
22	3256-70	4	Washer-Flat
23	3296-72	4	Nut-Lock, NI
24	106-4510	1	Headlamp ASM
24:1	108-0008	1	Lamp-12 Volt
25	107-3024	1	Clamp-Light
26	107-1020-03	1	Bracket-Light
27	3296-73	2	Nut-Lock, NI
28	3256-1	2	Washer-Flat

Ref	Part No.	Qty.	Description
29	106-4511	1	Harness-Wire
30	614249	2	Strap-Tie

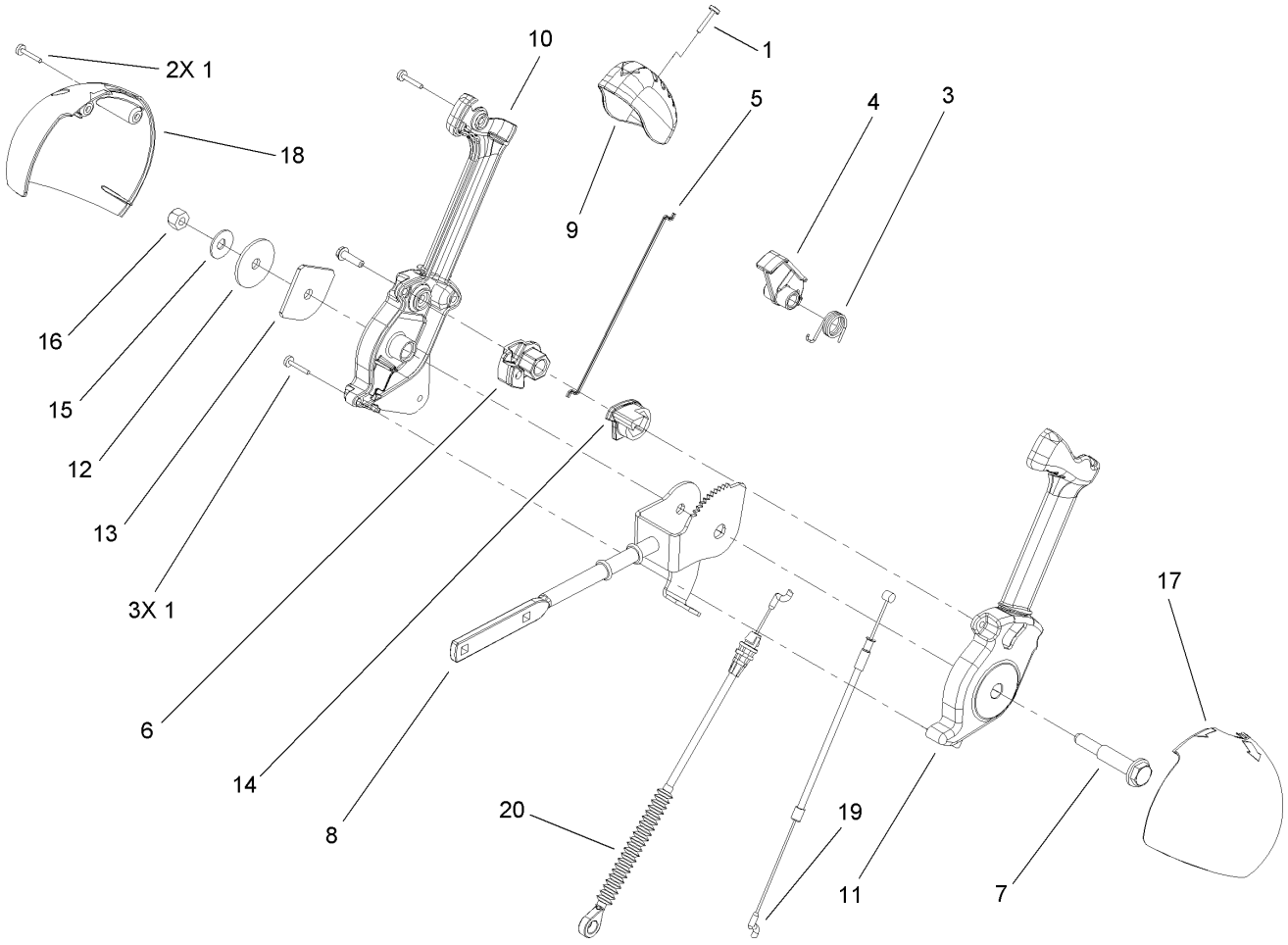

Lever Chute Control Assembly

Ref	Part No.	Qty.	Description
1	94-4496	6	Screw-PPH
3	105-9982	1	Spring-Torsion
4	105-9984	1	Trigger-Latch
5	105-9985	1	Link-Latch
6	105-9988	1	Lever-Cable, Deflector
7	105-9995	1	Screw-Shoulder
8	106-4479	1	Rod-Control, Chute
9	106-7280	1	Cap-Lever
10	106-7281	1	Lever-Chute Control, RH
11	106-7282	1	Lever-Chute Control, LH
12	107-3002	1	Washer-Nylon
13	106-7295	1	Plate-Friction
14	106-7310	1	Pawl-Latch
15	3290-456	1	Washer-Belleville
16	3296-29	1	Nut-Lock, NI
17	105-9986	1	Cover-Chute Lever, LH
18	106-7292	1	Cover-Chute Lever, RH
19	105-9989	1	Cable-Chute Release
20	105-9990	1	Cable-Control, Deflector

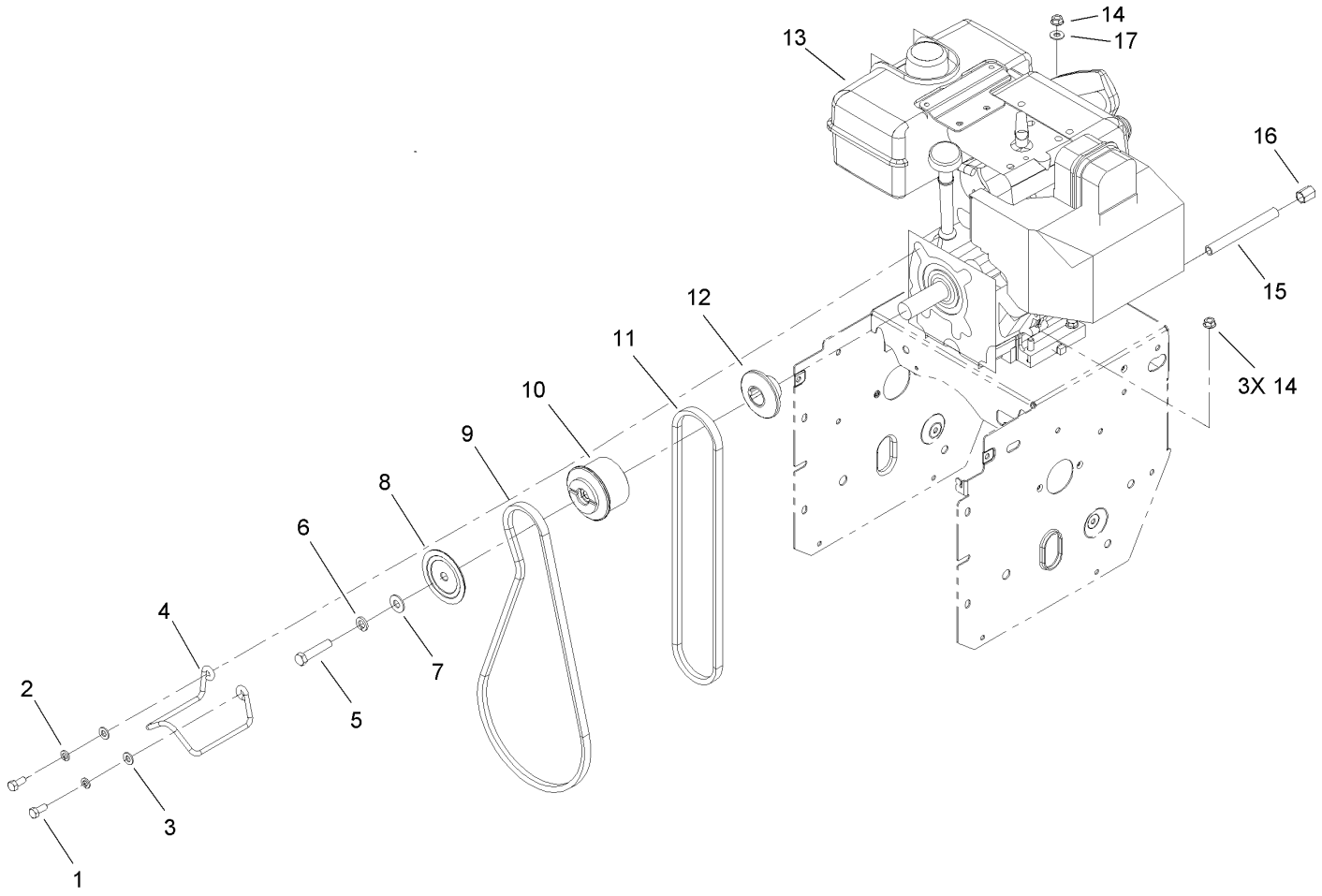

Engine Assembly

Ref	Part No.	Qty.	Description
1	3210-3	2	Screw-HH
2	3253-4	2	Washer-Lock
3	3256-23	2	Washer-Flat
4	107-3835	1	Guide-Belt
5	3212-8	1	Screw-HH
6	3253-6	1	Washer-Lock
7	3256-4	1	Washer-Flat
8	62-0940	1	Sheave-Half, Impeller
9	106-4498	1	Belt-V
10	106-7333	1	Pulley-Engine, Center
11	94-8812	1	V Belt-Traction
12	106-7334	1	Sheave-Half, Traction
❷❸13		1	Engine-Tecumseh, LH318Sa-156564H
14	32128-20	4	Nut-HF
15	289-34	1	Nipple-Pipe
16	288-2	1	Cap-Pipe
17	3256-2	1	Washer-Flat

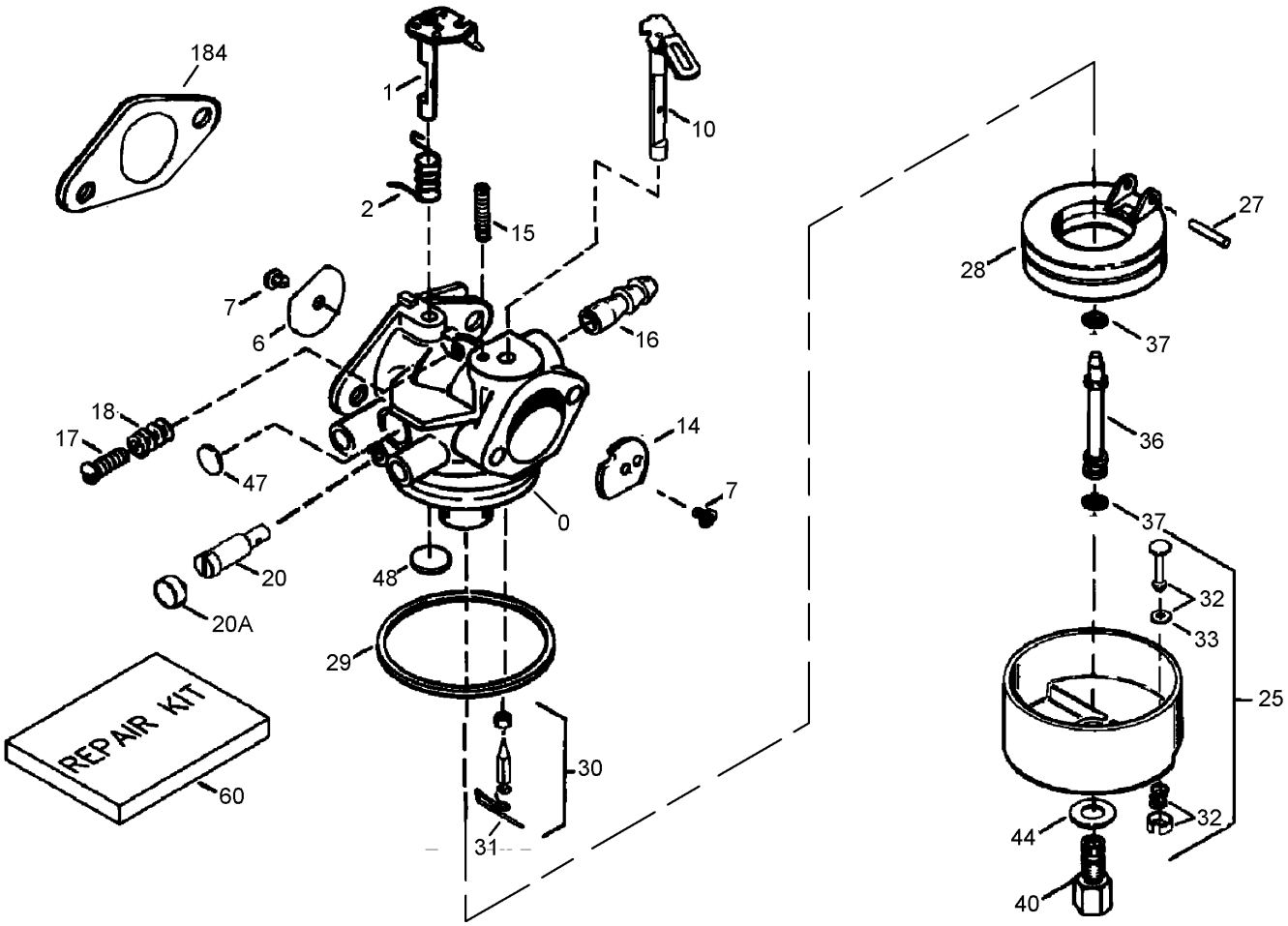

Carburetor Assembly
Tecumseh LH318SA-156564H

Ref	Part No.	Qty.	Description
❸0	640349	1	Carburetor (Includes 184)
❸1	631776A	1	Throttle Shaft And Lever ASM
❸2	631970	1	Spring-Return, Throttle
❸6	640109	1	Shutter-Throttle
❸7	650506	2	Screw-Shutter
❸10	632112	1	Choke Shaft And Lever ASM
❸14	632174	1	Shutter-Choke
❸15	630735	1	Spring-Positioning, Choke
❸16	632164	1	Fitting-Fuel
❸17	651025	1	Screw-Throttle Crack And Idle Speed
❸18	630766	1	Spring-Tension
❸20	640027	1	Screw-Restrictor, Idle
❸20A	640200	1	Cap-Screw, Idle Restrictor
❸25	631951	1	Float Bowl ASM (Includes 32 And 33)
❸27	631024	1	Shaft-Float
❸28	632802	1	Float
❸29	631028	1	O Ring-Bowl, Float
❸30	631021A	1	Inlet Needle, Seat, And Clip ASM (Inludes 31)
❸31	631022	1	Clip-Spring
❸32	27136A	1	Bowl Drain ASM
❸33	27554	1	Gasket-Plunger, Drain
❸36	640113	1	Tube-Nozzle

Ref	Part No.	Qty.	Description
❸37	632547	2	O Ring-Nozzle Tube, Main
❸40	640128	1	Nut-Bowl, High Speed
❸44	27110	1	Washer
❸47	630748	1	Plug-Welch, Idle Mixture Well
❸48	631027	1	Plug-Welch, Atmospheric Vent
❸60	632760B	1	Repair Kit (Includes 7, 27, 29, 30, 33, 37, 44, 47, 48)
❸184	33263	1	Gasket (Carburetor To Intake Pipe)

Engine Assembly
Tecumseh LH318SA-156564H

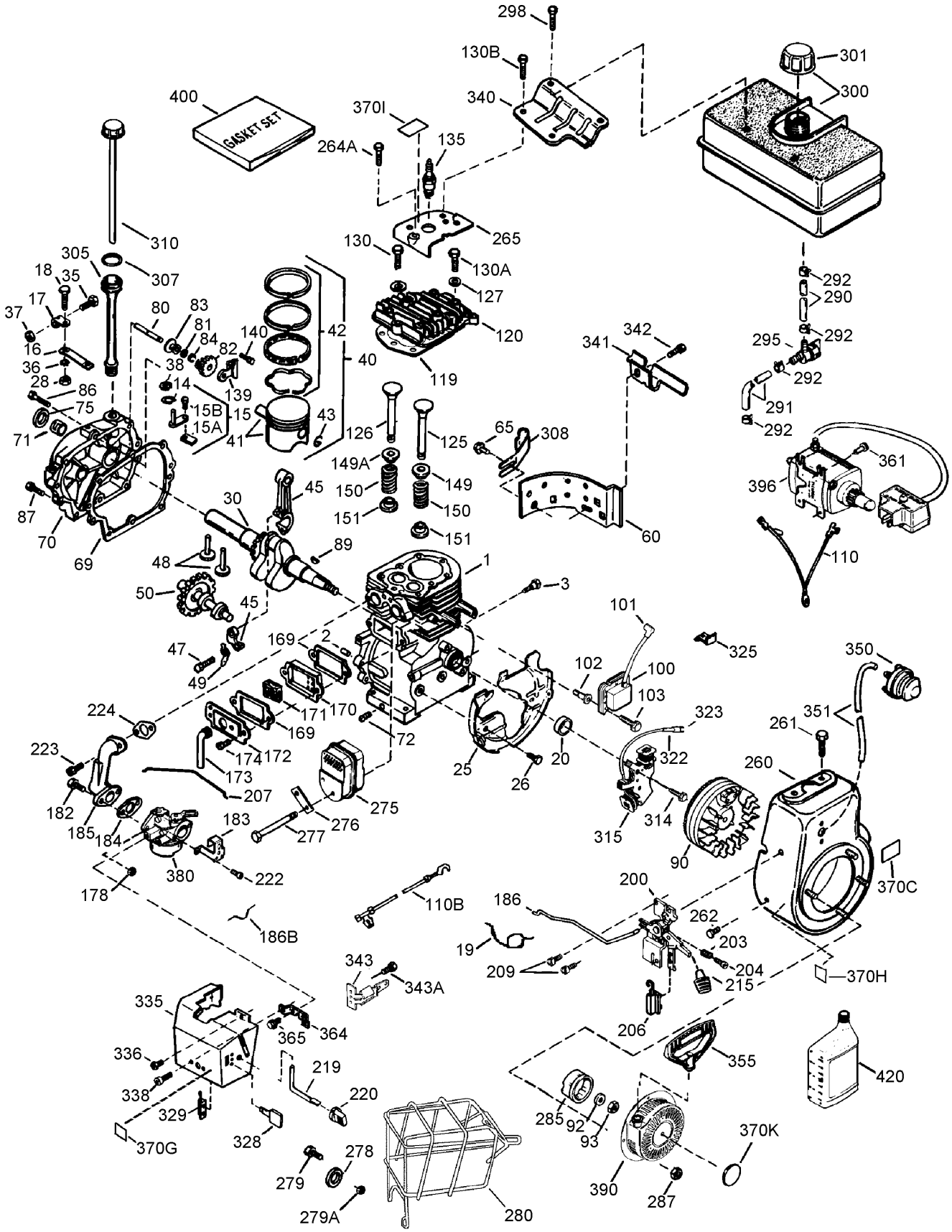

Engine Assembly
Tecumseh LH318SA-156564H

Ref	Part No.	Qty.	Description
❸1	35385	1	Cylinder ASM (Includes 2, 20, 72)
❶❸	756320C	1	Shortblock
❸2	27652	2	Pin-Dowel
❸3	650820	2	Screw (1/4-20 X 1/2In)
❸14	28277	1	Washer
❸15	30699C	1	Rod-Governor (Includes 15A, 15B)
❸15A	30700	1	Yoke-Governor
❸15B	650494	1	Screw (6-40 X 5/16In)
❸16	33454A	1	Lever-Governor
❸17	29916	1	Clamp-Lever, Governor
❸18	651028	1	Screw-Torx (T-15, 8-32 X 3/8In)
❸19	34663	1	Spring-Control, Speed
❸20	35319	1	Seal-Oil
❸25	37853	1	Baffle-Housing, Blower
❸26	650561	2	Screw (1/4-20 X 5/8In)
❸28	30322	1	Nut-Lock (8-32)
❸30	35571A	1	Shaft-Crank
❸35	29826	1	Screw (10-32 X 3/4In)
❸36	29918	1	Washer-Lock
❸37	29216	1	Nut-Lock (10-32)
❸38	29642	1	Ring-Retaining
❸40	40011	1	Piston, Pin And Ring Set ASM (STD)
❸40	40012	1	Piston, Pin And Ring Set ASM (.010In Os)
❸41	40009	1	Piston And Pin ASM (STD) (Includes 43)
❸41	40010	1	Piston And Pin ASM (.010In Os) (Includes 43)
❸42	40013	1	Ring Set (STD)
❸42	40014	1	Ring Set (.010In Os)
❸43	27888	2	Ring-Retaining, Piston Pin
❸45	36897	1	Connecting Rod ASM (Includes 47, 49)
❸47	651033	2	Bolt-Rod, Connecting
❸48	34034	2	Lifter-Valve
❸49	36896	1	Dipper-Oil
❸50	35375	1	Camshaft (Mcr)
❸60	33273A	1	Extension-Housing, Blower
❸65	650128	1	Screw (10-24 X 1/2In)
❸69	37342	1	Gasket-Cover, Cylinder
❸70	37847	1	Cover-Cylinder (Includes 71,75,80 - 84)
❸71	35377	1	Bushing-Crankshaft
❸72	27642	1	Plug-Drain, Oil
❸75	35319	1	Seal-Oil
❸80	37587	1	Shaft-Governor
❸81	651080	1	Washer
❸82	37588	1	Governor Gear ASM (Includes 81)
❸83	30588A	1	Spool-Governor
❸84	29193	1	Ring-Retaining
❸86	650833	7	Screw (1/4-20 X 1-3/16In)
❸87	650832	1	Screw (1/4-20 X 1-11/16In)

Ref	Part No.	Qty.	Description
❸89	32589	1	Key-Flywheel
❸90	611093	1	Flywheel ASM
❸92	650880	1	Washer-Lock
❸93	650881	1	Nut-Flywheel
❸100	35135A	1	Ignition-State, Solid (Includes 101)
❸101	610118	1	Cover-Plug, Spark
❸102	651024	2	Stud-Mounting, Solid State
❸103	651007	2	Screw
❸110	35187	1	Wire-Ground
❸110B	37047	1	Wire-Ground
❸119	36448	1	Gasket-Head, Cylinder
❸120	36449	1	Head-Cylinder
❸125	27878A	1	Valve-Exhaust (STD) (Includes 151)
❸125	27880A	1	Valve-Exhaust (1/32In Os) (Includes 151)
❸126	34035	1	Valve-Intake (STD.) (Includes 151)
❸127	650691	2	Washer
❸130	6021A	7	Screw (5/16–18 X 1–7/16In)
❸130A	650727	2	Screw (5/16-18 X 1-25/32In)
❸130B	651055	2	Screw (5/16-18 X 39/64In)
❸135	35395	1	Spark Plug-Resistor
❸139	33369	1	Bracket-Gear, Governor
❸140	650836	2	Screw (10-24 X 1/2In)
❸149	27882	1	Cap-Spring, Valve
❸149A	35862	1	Cap-Spring, Valve
❸150	27881	2	Spring-Valve
❸151	32581	2	Keeper-Spring, Valve
❸169	27896A	2	Gasket-Cover, Valve
❸170	28423	1	Body-Breather
❸171	28424	1	Element-Breather
❸172	28425	1	Cover-Valve
❸173	35350	1	Tube-Breather
❸174	650128	2	Screw (10-24 X 1/2In)
❸178	29752	2	Nut And Lock Washer ASM
❸182	30088A	2	Screw (1/4-28 X 1In)
❸183	34587A	1	Bracket-Choke
❸184	33263	1	Gasket (Carburetor To Intake Pipe)
❸185	33877	1	Pipe-Intake
❸186	34667	1	Link-Governor
❸186B	36652	1	Spring-Choke
❸200	34677	1	Bracket-Control (Includes 19, 203, 204, 206)
❸203	31342	1	Spring-Compression
❸204	651029	1	Screw (5-40 X 7/16In)
❸206	610973	1	Terminal
❸207	33878	1	Link-Throttle
❸209	650821	2	Screw (10-32 X 1/2In)
❸215	35440	1	Knob-Control
❸219	34586	1	Rod-Choke
❸220	35438	1	Knob-Choke

Engine Assembly (continued)
Tecumseh LH318SA-156564H

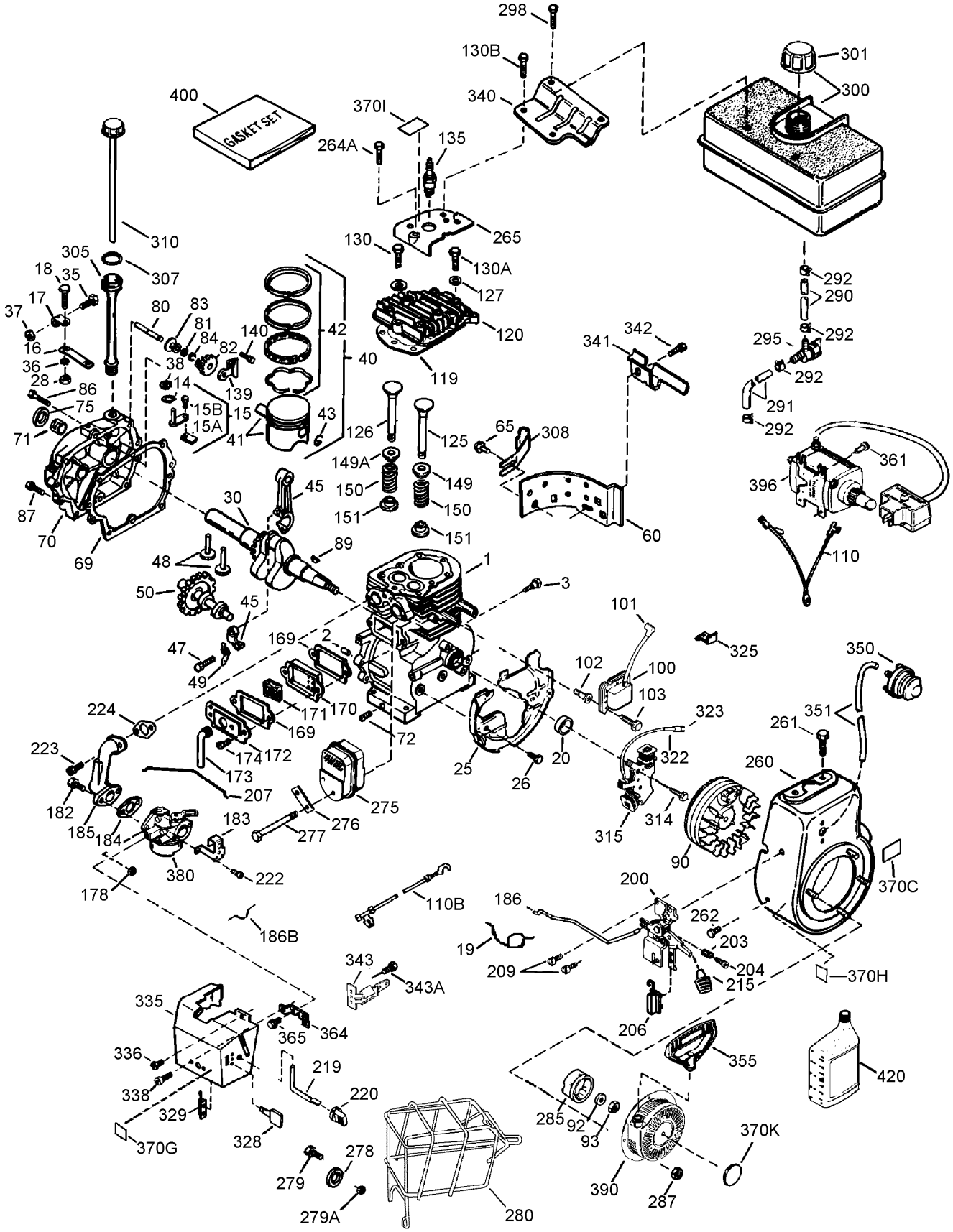

Engine Assembly (continued)
Tecumseh LH318SA-156564H

Ref	Part No.	Qty.	Description
❸264A	650802	1	Screw (1/4-20 X 5/8In)
❸265	33272D	1	Cover-Head, Cylinder
❸275	35056	1	Muffler
❸276	31588	1	Plate-Locking
❸277	651002	2	Screw (5/16-18 X 4-3/16In)
❸278	650147	2	Washer-Flat
❸279	650980	2	Screw (10-16 X 47/64)
❸279A	650979	2	Washer-Lock
❸280	36294	1	Muffler Heat Shield ASM (Includes 278, 279, 279A)
❸285	35985C	1	Cup-Starter
❸287	29752	4	Nut And Lock Washer ASM
❸290	29774	1	Line-Fuel
❸291	30705	1	Line-Fuel
❸292	26460	4	Clamp-Line, Fuel
❸295	35857	1	Valve-Shut Off, Fuel (Includes 292)
❸298	650665	2	Screw (1/4-15 X 3/4In)
❸300	34156A	1	Tank-Fuel (Includes 292, 301)
❸301	37844	1	Fuel Cap ASM
❸305	36877	1	Tube-Fill, Oil
❸307	35499	1	O–Ring
❸308	35539	1	Clip
❸310	37869	1	Dipstick
❸314	650873	1	Screw (1/4-20 X 3/4In)
❸315	611111	1	Coil-Alternator, 18 Watt (Includes 322, 323)
❸322	611117	1	Body-Connector
❸323	611118	1	Terminal
❸325	29443	1	Clip-Wire
❸328	35062	2	Key-Ignition
❸329	610973	1	Terminal
❸335	36547	1	Cover-Carburetor
❸336	650765	1	Screw (10-32 X 1/2In)
❸338	28942	2	Screw (10-32 X 3/8In)
❸340	34154	1	Bracket-Tank, Fuel
❸341	34155	1	Bracket-Tank, Fuel
❸342	650561	1	Screw (1/4-20 X 5/8In)
❸343	35079A	1	Bracket-Switch, Key (Includes 343A)
❸343A	651060	1	Screw (10-32 X 23/64In)
❸350	570682A	1	Primer ASM
❸351	32180C	1	Line-Primer (12In)
❸355	590574	1	Handle-Grip, Mitten
❸361	650990	2	Screw (T-30, 1/4-20 X 15/32In)
❸364	37659	1	Bracket-Cover, Carburetor
❸365	650767	2	Screw (8-32 X 27/64In)
❸370C	36501	1	Decal-Primer
❸370G	36534	1	Decal-Caution
❸370H	35077	1	Decal-Instruction
❸370I	37119	1	Decal-Warning
❸370K	36695	1	Decal-Starter
❸380	640349	1	Carburetor (Includes 184)

Ref	Part No.	Qty.	Description
❸390	590749	1	Starter-Rewind (Note: This Engine Could Have Been Built With Starter 590733)
❸396	37102	1	220 Volt Electric Motor ASM
❸400	36450C	1	Gasket Set (Includes 69, 119, 169, 184, 224)
❸420	730226A	1	Oil-Sae 5W30 (Quart)

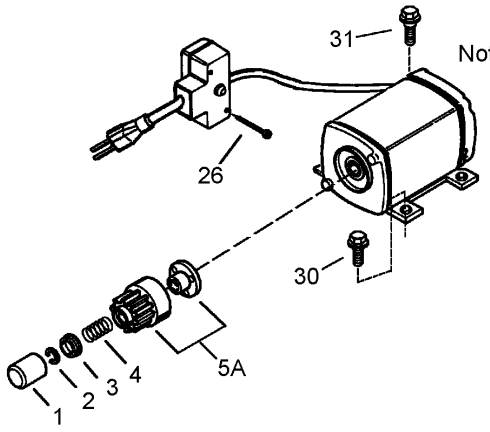

Note: Internal parts are not serviced.
In the event of electrical failure,
the entire motor must be replaced.

Electric Starter Assembly
Tecumseh LH318SA-156564H

Ref	Part No.	Qty.	Description
❸0	37102	1	220 Volt Electric Motor ASM
❸1	33451	1	Cover-Dust
❸2	33842	1	Ring-Retainer
❸3	33430	1	Retainer-Spring
❸4	33431	1	Spring-Anti Drift
❸5A	37050	1	Gear And Nut (Includes 2)
❸26	650819	2	Screw (6-32 X 2-1/2In)
❸26	651032	2	Screw (12-16 X 5/8In)
❸30	30063	2	Screw (Torx T-30, 1/4-20 X 1/2In)
❸31	650820	2	Screw (1/4-20 X 1/2In)

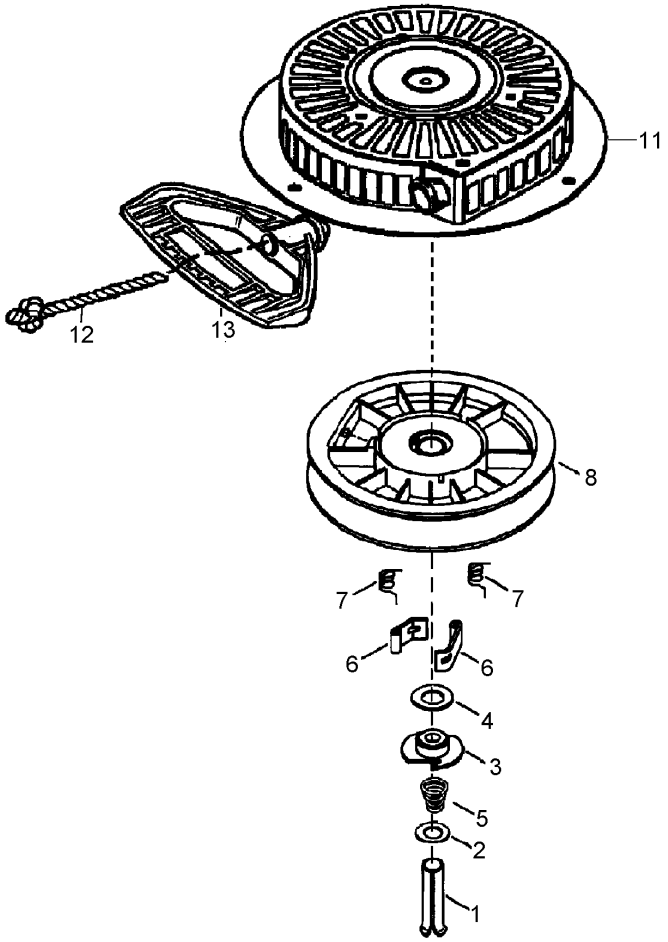

Recoil Starter Assembly
Tecumseh LH318SA-156564H

Ref	Part No.	Qty.	Description
❸0	590749	1	Starter-Rewind
❸1	590599A	1	Spring Pin ASM (Includes 4)
❸2	590600	1	Washer
❸3	590679	1	Retainer
❸4	590601	1	Washer
❸5	590678	1	Spring-Brake
❸6	590680	2	Dog-Starter
❸7	590412	2	Spring-Dog
❸8	590682	1	Pulley And Rewind Spring ASM
❸11	590750A	1	Starter Housing ASM
❸12	590535	1	Rope-Starter (98In X 9/64In Diameter)
❸13	590574	1	Handle-Grip, Mitten (Not Included With Starter)

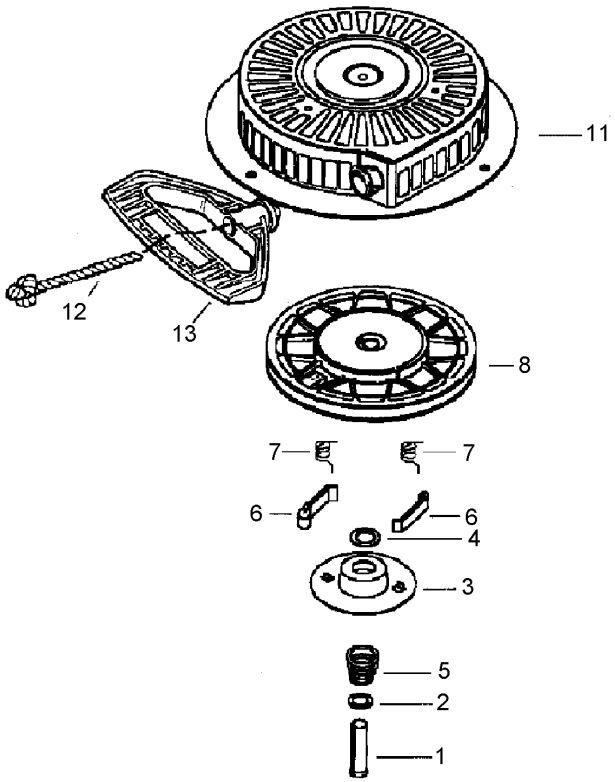

Recoil Starter Assembly (Optional)
Tecumseh LH318SA-156564H

Ref	Part No.	Qty.	Description
❸0	590733	1	Starter-Rewind
❸1	590599A	1	Spring Pin ASM (Includes 4)
❸2	590600	1	Washer
❸3	590696	1	Retainer
❸4	590601	1	Washer
❸5	590697	1	Spring-Brake
❸6	590698	2	Dog-Starter
❸7	590699	2	Spring-Dog
❸8	590709	1	Pulley And Rewind Spring ASM
❸11	590734A	1	Starter Housing ASM
❸12	590535	1	Rope-Starter (98In X 9/64In Diameter)
❸13	590574	1	Handle-Grip, Mitten (Not Included With Starter)

Attachments and Accessories

For 38635 - Power Max 828LE Snowthrower

Product Name	Model/Part
Tire Chain Kit	107-3813
Snow Cab	107-3814
Weight Kit	107-3815
28in Drift Breaker	107-3817

NOTES

NOTES


TORO®